

PEARSON NEW INTERNATIONAL EDITION

# Modern Electronic Communication

Jeffrey S. Beasley Gary M. Miller

Ninth Edition

ALWAYS LEARNING

PEARSON

# Pearson New International Edition

Modern Electronic Communication
Jeffrey S. Beasley  Gary M. Miller
Ninth Edition

PEARSON

**Pearson Education Limited**
Edinburgh Gate
Harlow
Essex CM20 2JE
England and Associated Companies throughout the world

*Visit us on the World Wide Web at:* www.pearsoned.co.uk

© Pearson Education Limited 2014

All rights reserved. No part of this publication may be reproduced, stored in a retrieval system, or transmitted in any form or by any means, electronic, mechanical, photocopying, recording or otherwise, without either the prior written permission of the publisher or a licence permitting restricted copying in the United Kingdom issued by the Copyright Licensing Agency Ltd, Saffron House, 6–10 Kirby Street, London EC1N 8TS.

All trademarks used herein are the property of their respective owners. The use of any trademark in this text does not vest in the author or publisher any trademark ownership rights in such trademarks, nor does the use of such trademarks imply any affiliation with or endorsement of this book by such owners.




ISBN 10: 1-292-02547-6
ISBN 13: 978-1-292-02547-6

**British Library Cataloguing-in-Publication Data**
A catalogue record for this book is available from the British Library

Printed in the United States of America

# Table of Contents

1. Introductory Topics
Jeffrey S. Beasley/Gary M. Miller **1**

2. Amplitude Modulation: Transmission
Jeffrey S. Beasley/Gary M. Miller **67**

3. Amplitude Modulation: Reception
Jeffrey S. Beasley/Gary M. Miller **115**

4. Single-Sideband Communications
Jeffrey S. Beasley/Gary M. Miller **163**

5. Frequency Modulation: Transmission
Jeffrey S. Beasley/Gary M. Miller **203**

6. Frequency Modulation: Reception
Jeffrey S. Beasley/Gary M. Miller **257**

7. Communications Techniques
Jeffrey S. Beasley/Gary M. Miller **297**

8. Digital Communications: Coding Techniques
Jeffrey S. Beasley/Gary M. Miller **347**

9. Wired Digital Communications
Jeffrey S. Beasley/Gary M. Miller **403**

10. Wireless Digital Communications
Jeffrey S. Beasley/Gary M. Miller **457**

11. Transmission Lines
Jeffrey S. Beasley/Gary M. Miller **501**

12. Wave Propagation
Jeffrey S. Beasley/Gary M. Miller **559**

13. Antennas
Jeffrey S. Beasley/Gary M. Miller **607**

14. Waveguides and Radar
Jeffrey S. Beasley/Gary M. Miller **651**

Glossary
Jeffrey S. Beasley/Gary M. Miller **695**

Index **715**

# INTRODUCTORY TOPICS

From *Modern Electronic Communication*, Ninth Edition, Jeffrey S. Beasley, Gary M. Miller. Copyright © 2008 by Pearson Education, Inc. Published by Prentice Hall. All rights reserved.

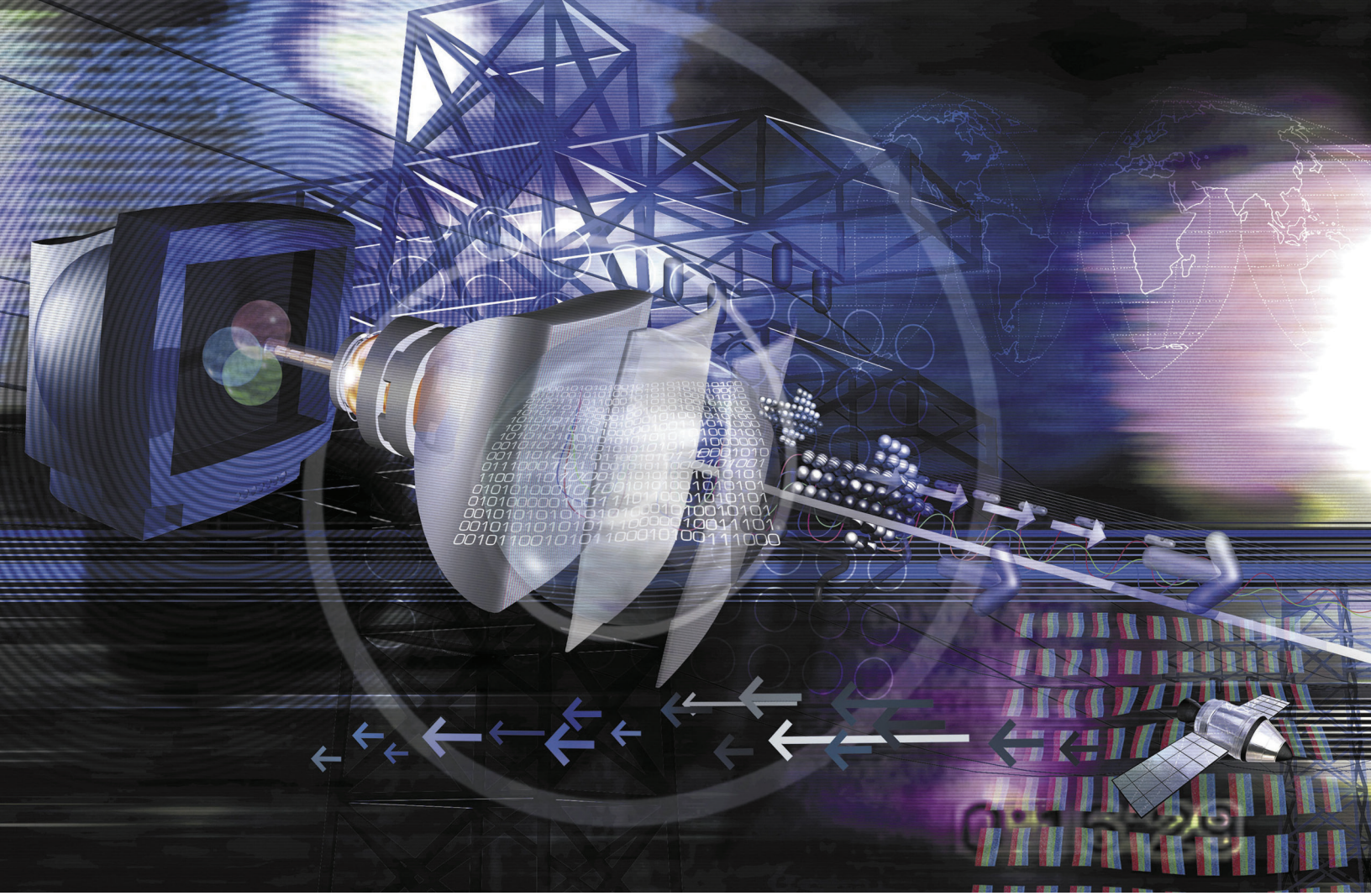

## Chapter Outline

1 Introduction
2 The dB in Communications
3 Noise
4 Noise Designation and Calculation
5 Noise Measurement
6 Information and Bandwidth
7 *LC* Circuits
8 Oscillators
9 Troubleshooting
10 Troubleshooting with Electronics Workbench™ Multisim

## Objectives

- Describe a basic communication system and explain the concept of modulation
- Develop an understanding of the use of the decibel (dB) in communications systems
- Define *electrical noise* and explain its effect at the first stages of a receiver
- Calculate the thermal noise generated by a resistor
- Calculate the signal-to-noise ratio and noise figure for an amplifier
- Describe several techniques for making noise measurements
- Explain the relationship among information, bandwidth, and time of transmission
- Analyze nonsinusoidal repetitive waveforms via Fourier analysis
- Analyze the operation of various *RLC* circuits
- Describe the operation of common *LC* and crystal oscillators

# INTRODUCTORY TOPICS



Tektronix's digital oscilloscopes include easy-to-use features, high bandwidth, MegaZoom rates, and integrated logic timing channels. (Courtesy of Tektronix, Inc.)

## Key Terms

modulation
intelligence signal
intelligence
demodulation
transducer
dB
dBm
0 dBm
dBm(600)
dBm(75)
dBm(50)
dBW
dB$\mu$V
electrical noise
static
external noise
internal noise
wave propagation
atmospheric noise
space noise
solar noise
cosmic noise
Johnson noise
thermal noise
white noise
low-noise resistor
shot noise
excess noise
transit-time noise
signal-to-noise ratio
noise figure
noise ratio
octave
Friiss's formula
device under test
tangential method
information theory
channel
Hartley's law
Fourier analysis
FFT
frequency domain record
aliasing
quality
leakage
dissipation
resonance
tank circuit
poles
constant-*k* filter
*m*-derived filter
roll-off
stray capacitance
oscillator
flywheel effect
damped
continuous wave
Barkhausen criteria
frequency synthesizer



# 1 Introduction

We will provide an introduction to all relevant aspects of communications systems. These systems had their beginning with the discovery of various electrical, magnetic, and electrostatic phenomena prior to the twentieth century. Starting with Samuel Morse's invention of the telegraph in 1837, a truly remarkable rate of progress has occurred. The telephone, thanks to Alexander Graham Bell, came along in 1876. The first complete system of wireless communication was provided by Guglielmo Marconi in 1894. Lee DeForest's invention of the triode vacuum tube in 1908 allowed the first form of practical electronic amplification and really opened the door to wireless communication. In 1948 another major discovery in the history of electronics occurred with the development of the transistor by Shockley, Brattain, and Bardeen. The more recent developments, such as integrated circuits, very large-scale integration, and computers on a single silicon chip, are probably familiar to you.

The rapid transfer of these developments into practical communications systems linking the entire globe (and now into outer space) has stimulated a bursting growth of complex social and economic activities. This growth has subsequently had a snowballing effect on the growth of the communication industry with no end in sight for the foreseeable future. Some people refer to this as the age of communications.

The function of a communication system is to transfer information from one point to another via some communication link. The very first form of "information" electrically transferred was the human voice in the form of a code (i.e., the Morse code), which was then converted back to words at the receiving site. People had a natural desire and need to communicate rapidly between distant points on the earth, and that was the major concern of these developments. As that goal became a reality, and with the evolution of new technology following the invention of the triode vacuum tube, new and less basic applications were also realized, such as entertainment (radio and television), radar, and telemetry. The field of communications is still a highly dynamic one, with advancing technology constantly making new equipment possible or allowing improvement of the old systems. Communications was the basic origin of the electronics field, and no other major branch of electronics developed until the transistor made modern digital computers a reality.

**Modulation**
process of putting information onto a high-frequency carrier for transmission

**Intelligence Signal**
the low frequency information that modulates the carrier

**Intelligence**
low-frequency information modulated onto a high-frequency carrier in a transmitter

**Demodulation**
process of removing intelligence from the high-frequency carrier in a receiver

## Modulation

Basic to the field of communications is the concept of modulation. **Modulation** is the process of putting information onto a high-frequency carrier for transmission. In essence, then, the transmission takes place at the high frequency (the carrier) which has been modified to "carry" the lower-frequency information. The low-frequency information is often called the **intelligence signal** or, simply, the **intelligence.** It follows that once this information is received, the intelligence must be removed from the high-frequency carrier—a process known as **demodulation.** At this point you may be thinking, why bother to go through this modulation/demodulation process? Why not just transmit the information directly? The problem is that the frequency of the human voice ranges from about 20 to 3000 Hz. If everyone transmitted those frequencies directly as radio waves, interference would cause them all to be ineffective. Another limitation of equal importance is the virtual impossibility of transmitting

such low frequencies since the required antennas for efficient propagation would be miles in length.

The solution is modulation, which allows propagation of the low-frequency intelligence with a high-frequency carrier. The high-frequency carriers are chosen such that only one transmitter in an area operates at the same frequency to minimize interference, and that frequency is high enough so that efficient antenna sizes are manageable. There are three basic methods of putting low-frequency information onto a higher frequency. Equation (1) is the mathematical representation of a sine wave, which we shall assume to be the high-frequency carrier.

$$v = V_P \sin(\omega t + \Phi) \tag{1}$$

where $v$ = instantaneous value
$V_P$ = peak value
$\omega$ = angular velocity = $2\pi f$
$\Phi$ = phase angle

Any one of the last three terms could be varied in accordance with the low-frequency information signal to produce a modulated signal that contains the intelligence. If the amplitude term, $V_P$, is the parameter varied, it is called amplitude modulation (AM). If the frequency is varied, it is frequency modulation (FM). Varying the phase angle, $\Phi$, results in phase modulation (PM). In subsequent chapters we shall study these systems in detail.

## Communications Systems

Communications systems are often categorized by the frequency of the carrier. Table 1 provides the names for various frequency ranges in the radio spectrum. The extra-high-frequency range begins at the starting point of infrared frequencies, but the infrareds extend considerably beyond 300 GHz ($300 \times 10^9$ Hz). After the infrareds in the electromagnetic spectrum (of which the radio waves are a very small portion) come light waves, ultraviolet rays, X rays, gamma rays, and cosmic rays.

**Table 1** Radio-Frequency Spectrum

| Frequency | Designation | Abbreviation |
|---|---|---|
| 30–300 Hz | Extremely low frequency | ELF |
| 300–3000 Hz | Voice frequency | VF |
| 3–30 kHz | Very low frequency | VLF |
| 30–300 kHz | Low frequency | LF |
| 300 kHz–3 MHz | Medium frequency | MF |
| 3–30 MHz | High frequency | HF |
| 30–300 MHz | Very high frequency | VHF |
| 300 MHz–3 GHz | Ultra high frequency | UHF |
| 3–30 GHz | Super high frequency | SHF |
| 30–300 GHz | Extra high frequency | EHF |

Figure 1 represents a simple communication system in block diagram form. Notice that the modulated stage accepts two inputs, the carrier and the information (intelligence) signal. It produces the modulated signal, which is subsequently amplified before transmission. Transmission of the modulated signal can take place by any one of four means: antennas, waveguides, optical fibers, or transmission lines. These four modes of propagation will be studied in subsequent chapters. The receiving unit of the system picks up the transmitted signal but must reamplify it to compensate for attenuation that occurred during transmission. Once suitably amplified, it is fed to the demodulator (often referred to as the detector), where the information signal is extracted from the high-frequency carrier. The demodulated signal (intelligence) is then fed to the amplifier and raised to a level enabling it to drive a speaker or any other output transducer. A **transducer** is a device that converts energy from one form to another.

**Transducer**
device that converts energy from one form to another

Many of the performance measurements in communication systems are specified in dB (decibels). Section 2 introduces the use of this very important concept in communication systems. This is followed by two basic limitations on the performance of a communications systems: (1) electrical noise and (2) the bandwidth of frequencies allocated for the transmitted signal. Sections 3 to 6 are devoted to these topics because of their extreme importance.

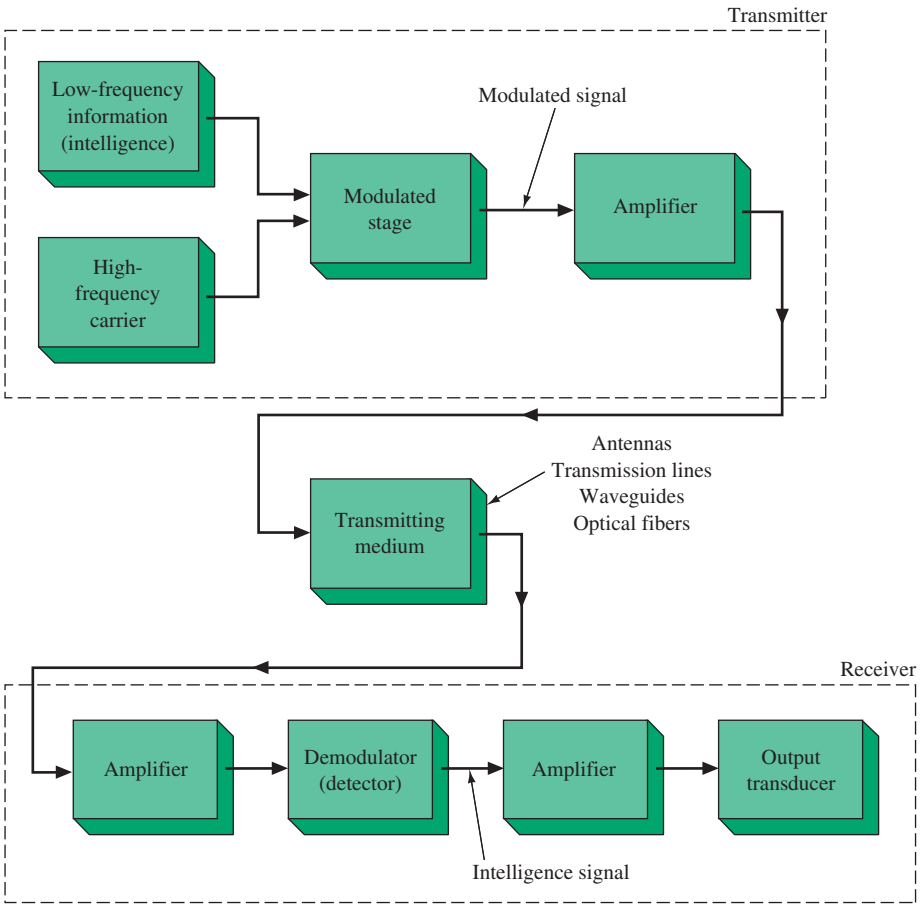


FIGURE 1 A communication system block diagram.



# 2 The dB in Communications

**Decibels (dBs)** are used to specify measured and calculated values in noise analysis, audio systems, microwave system gain calculations, satellite system link-budget analysis, antenna power gain, light-budget calculations, and many other communications system measurements. In each case, the dB value is calculated with respect to a standard or specified reference.

**dB (decibel)**
relative unit of measurement used frequently in electronic communications to describe power gain or loss

The dB value is calculated by taking the log of the ratio of the measured or calculated power ($P_2$) with respect to a reference power ($P_1$) level. This result is then multiplied by 10 to obtain the value in dB. The formula for calculating the dB value of two ratios is shown in Equation (2). Equation (2) is commonly referred to as the *power ratio form* for dB.

$$\text{dB} = 10 \log_{10} \frac{P_2}{P_1} \tag{2}$$

By using the power relationship $P = V^2/R$, the relationship shown in Equation (3) is obtained:

$$\text{dB} = 10 \log_{10} \left( \frac{V_2^2/R_2}{V_1^2/R_1} \right)$$

Let $R_1 = R_2$:

$$\text{dB} = 10 \log_{10} \frac{V_2^2}{V_1^2} \tag{3}$$

Note that we have assumed that the resistances ($R_1$ and $R_2$) are equivalent; therefore, these terms can be ignored in the dB power equation. This is a reasonable assumption in most communication systems since maximum power transfer (a desirable characteristic) is obtained when the input and output impedances are matched. Equation (3) can be modified (using a property of logarithms) to provide a relationship for decibels in terms of the voltage ratios instead of power ratios. This is called the *voltage gain equation* and is shown in Equation (4).

$$\text{dB} = 20 \log_{10} \left( \frac{V_2}{V_1} \right) \tag{4}$$

## Applying the dB Value

The dB unit is often used in specifying input- and output-signal-level requirements for many communication systems. When making dB measurements, a reference level is specified or implied for that particular application. An example is found in audio consoles in broadcast systems, where a **0-dBm** input level is usually specified as the required input- and output-audio level for 100% modulation. Notice that a lowercase *m* has been attached to the dB unit. This indicates that the specified dB level is relative to a 1-mW reference.

**dBm**
dB level using a 1-mW reference

**0 dBm**
1 mW measured relative to a 1-mW reference

In standard audio systems **0 dBm** is defined as 0.001 W measured with respect to a load termination of 600 Ω. A 600-Ω balanced audio line is the

standard for professional audio, broadcast, and telecommunications systems. However, 0 dBm is not exclusive to a 600-Ω impedance.

**Example 1**

*Show that when making a dBm measurement, a measured value of 1 mW will result in a 0 dBm power level.*

**Solution**

$$\text{dB} = 10 \log_{10} \frac{P_2}{P_1} = 10 \log_{10} \frac{1 \text{ mW}}{1 \text{ mW}} = 0 \text{ dB} \qquad \text{or} \qquad 0 \text{ dBm} \tag{2}$$

This result, 0 dB, is expressed as 0 dBm to indicate that the result was obtained relative to a 1-mW reference.

It can be shown that the voltage measured across a 600-Ω load for a 0-dBm level is 0.775 V. This value can be obtained by first modifying Equation (2) by inserting the 1 mW value for $P_1$, as shown.

$$\text{dB} = 10 \log_{10} \left( \frac{P_2}{P_1} \right)$$

where $P_2 = \dfrac{V_2^2}{600}$

$P_1 = 0.001$ W

Since 1 mW is the specified reference for dBm, the voltage reference for 0 dBm can be developed as follows:

$$0 \text{ dBm} = 10 \log \frac{V_2^2/600}{0.001}$$

$$0 \text{ dBm} = \log \frac{V_2^2/600}{0.001}$$

$$\log^{-1}(0 \text{ dBm}) = \frac{V_2^2/600}{0.001}$$

$$1 = \frac{V_2^2/600}{0.001}$$

$$0.6 = V_2^2$$

$$V_2 = 0.77459$$

**dBm(600)**
decibel measurement using a 1-mW reference with respect to a 600-Ω load

The voltage value 0.77459 (0.775 V) is the reference for 0 dB with respect to a 600-Ω load when a voltage measurement is used to calculate the **dBm(600)** value. The dBm(600) term indicates that this measurement or calculation is made using a 1-mW reference with respect to a 600-Ω load.

$$\text{dBm}(600) = 20 \log_{10} \left( \frac{V_2}{0.775} \right) \tag{5}$$

Example 2 demonstrates how to solve for the voltage value ($V_2$) if a +8-dBm level is specified.

## Example 2

*A microwave system requires a +8-dBm audio level to provide 100% modulation. Determine the voltage level required to produce a +8-dBm level. Assume a 600-Ω audio system.*

### Solution

Since this is a 600-Ω system, use the 0.775-V reference shown in Equation (5).

$$\text{dBm}(600) = 20 \log_{10}\left(\frac{V_2}{0.775}\right) \tag{5}$$

$$+8 \text{ dBm} = 20 \log \frac{V_2}{0.775}$$

$$0.4 = \log \frac{V_2}{0.775}$$

$$\log^{-1}(0.4) = \frac{V_2}{0.775}$$

$$V_2 = 1.947 \text{ V}$$

Thus, to verify that a +8-dBm level is being provided to the input of the microwave transmitter, approximately 1.95 V must be measured across the 600-Ω input.

The term *dBm* also applies to communication systems that have a standard termination impedance other than 600 Ω. For example, many communication systems are terminated with 75 Ω. The 0-dBm value is still defined as 1 mW, but it is measured with respect to a 75-Ω termination instead of 600 Ω. Therefore, the voltage reference for a 0-dBm system with respect to 75 Ω is obtained by solving for $V$ in the expression $P = V^2/R$ as shown:

$$V = \sqrt{PR} = \sqrt{(0.001)(75)} = 0.274 \text{ V}$$

To calculate the voltage gain or loss with respect to a 75-Ω load, use Equation (6). This value is specified as **dBm(75)** to indicate that this measure was made or calculated using a 1-mW reference relative to a 75-Ω load.

**dBm(75)**
a measurement made using a 1-mW reference with respect to a 75-Ω load

$$\text{dBm}(75) = 20 \log_{10} \frac{V}{0.274} \tag{6}$$

Fifty-ohm systems are usually used in radio communications. The dBm voltage reference for a 50-Ω system is

$$V = \sqrt{PR} = \sqrt{(0.001)(50)} = 0.2236 \text{ V}$$

**dBm(50)**
a measurement made using a 1-mW reference with respect to a 50-Ω load

To calculate the voltage gain or loss expressed in dB for a 50-Ω system [**dBm(50)**], use Equation (4) with $V_1 = 0.2236$. This relationship is shown in Equation (7).

$$\text{dBm(50)} = 20 \log_{10} \frac{V}{0.2236} \tag{7}$$

**dBW**
a measurement made using a 1-W reference

It is common for power to be expressed in watts instead of milliwatts. In this case the dB unit is obtained with respect to 1 W and the dB values are expressed as **dBW.**

0 dBW is defined as 1 W measured with respect to a 1-W reference.

Remember, dB is a relative measurement. As shown by Equations (1) and (3), both power and voltage gains can be expressed in dB relative to a reference value. In the case of dBW, the reference is 1 W; therefore, Equation (1) is written with 1 W replacing the reference $P_1$. This gives Equation (8).

$$\text{dBW} = 10 \log_{10} \frac{P_2}{1 \text{ W}} \tag{8}$$

In some applications, it may be necessary to convert from one reference dB to another. Example 3 demonstrates how to convert from dBm to dBW.

**Example 3**

*A laser diode outputs +10 dBm. Convert this value to*
*(a) watts.*
*(b) dBW.*

**Solution**

(a) Convert +10 dBm to watts. Substitute and solve for $P_2$:

$$+10 \text{ dBm} = 10 \log \frac{P_2}{0.001}$$

$$\log^{-1}(1) = \frac{P_2}{0.001} \Rightarrow 10 = \frac{P_2}{0.001} \tag{2}$$

$$P_2 = 0.01 \text{ W}$$

(b) Convert +10 dBm to dBW.

$$\text{dBW} = 10 \log \frac{0.01 \text{ W}}{1 \text{ W}} = -20 \text{ dBW} \tag{8}$$

**dBμV**
a measurement made using a 1-μV reference

It is common with communication receivers to express voltage measurements in terms of **dBμV,** dB-microvolts. For voltage gain calculations involving dBμV, use Equation (4) and specify 1 μV as the reference ($V_1$) in the calculations, as shown in Equation (9).

$$\text{dB}\mu\text{V} = 20 \log_{10} \frac{V_2}{1 \ \mu\text{V}} \tag{9}$$

**Table 2** Conversion Table for Common dBm Values

| Common dBm Values | Equivalent Voltage Level (600 Ω) | Equivalent Voltage 75 Ω | Equivalent Voltage 50 Ω | Watts | dBW |
|---|---|---|---|---|---|
| 38 | 61.560 V | 21.765 V | 17.761 V | 6.3 | 8 |
| 30 | 24.508 V | 8.665 V | 7.071 V | 1.0 | 0 |
| 20 | 7.750 V | 2.740 V | 2.236 V | $1.00 \times 10^{-1}$ | −10 |
| 15 | 4.358 V | 1.541 V | 1.257 V | $3.16 \times 10^{-2}$ | −15 |
| 10 | 2.451 V | 0.866 V | 0.7071 V | $1.00 \times 10^{-2}$ | −20 |
| 8 | 1.947 V | 0.688 V | 0.5617 V | $6.31 \times 10^{-3}$ | −22 |
| 6 | 1.546 V | 0.547 V | 0.4461 V | $3.98 \times 10^{-3}$ | −24 |
| 2 | 0.976 V | 0.345 V | 0.2815 V | $1.58 \times 10^{-3}$ | −28 |
| 1 | 0.870 V | 0.307 V | 0.2509 V | $1.26 \times 10^{-3}$ | −29 |
| 0 | 0.775 V | 0.274 V | 0.2236 V | $1.00 \times 10^{-3}$ | −30 |
| −1 | 0.691 V | 0.244 V | 0.1993 V | $7.94 \times 10^{-4}$ | −31 |
| −2 | 0.616 V | 0.218 V | 0.1776 V | $6.31 \times 10^{-4}$ | −32 |
| −6 | 0.388 V | 0.137 V | 0.1121 V | $2.51 \times 10^{-4}$ | −36 |
| −10 | 0.245 V | 86.65 mV | 70.7 mV | $1.00 \times 10^{-4}$ | −40 |
| −15 | 0.138 V | 48.72 mV | 39.8 mV | $3.16 \times 10^{-5}$ | −45 |
| −20 | 77.5 mV | 27.40 mV | 22.4 mV | $1.00 \times 10^{-5}$ | −50 |
| −35 | 13.78 mV | 4.872 mV | 3.98 mV | $3.16 \times 10^{-7}$ | −65 |
| −50 | 2.45 mV | 866.5 μV | 0.707 mV | $1.00 \times 10^{-8}$ | −80 |
| −70 | 0.2451 mV | 86.65 μV | 70.7 μV | $1.00 \times 10^{-10}$ | −100 |

There are many applications using decibels in calculations involving relative values. The important thing to remember is that a relative reference is typically specified or understood when calculating or measuring a decibel value. Table 2 is a conversion table for many common dBm values. A conversion table is provided for dBm, voltage, and watts for 600-Ω, 75-Ω, and 50-Ω systems. Additionally, a list of common decibel terms is provided in Table 3.



## 3 Noise

**Electrical noise** may be defined as any undesired voltages or currents that ultimately end up appearing in the receiver output. To the listener this electrical noise often manifests itself as **static.** It may only be annoying, such as an occasional burst of static, or continuous and of such amplitude that the desired information is obliterated.

**Electrical Noise**
any undesired voltages or currents that end up appearing in a circuit

**Static**
electrical noise that may occur in the output of a receiver

Noise signals at their point of origin are generally very small, for example, at the microvolt level. You may be wondering, therefore, why they create so much trouble. Well, a communications receiver is a very sensitive instrument that is given a very small signal at its input that must be greatly amplified before it can possibly drive a speaker. Consider the receiver block diagram shown in Figure 1 to be representative of a standard FM radio (receiver). The first amplifier block, which forms the "front end" of the radio, is required to amplify a received signal from the radio's antenna that is often less than 10 μV. It does not take a very large dose of undesired signal (noise) to ruin reception. This is true even though the transmitter output may be many thousands of watts because, when received, it is severely attenuated. Therefore, if the desired signal received is of the same order of magnitude as the

**Table 3** dB Reference Table

| | |
|---|---|
| **dBm** | The dB using a 1-mW (0.001-W) reference, which is the typical measurement for audio input/output specifications. This measurement is also used in low-power optical transmitter specifications. |
| **dBm(600)** | The standard audio reference power level defined by 1 mW measured with respect to a 600-Ω load. This measurement is commonly used in broadcasting and professional audio applications and is a common telephone communications standard. |
| **dBm(50)** | The standard defined by 1 mW measured with respect to a 50-Ω load. This measurement is commonly used in radio-frequency transmission/receiving systems. |
| **dBm(75)** | The standard defined by 1 mW measured with respect to a 75-Ω load. |
| **dBmW** | The generic form for a 1-mW reference, also written as dBm. This term usually has an inferred load reference, depending on the application. |
| **dBW** | A common form for power amplification relative to a 1-W reference (usually 50 Ω). Typical applications are found in specifications for radio-frequency power amplifiers and high-power audio amplifiers. |
| **dBμV** | A common form for specifying input radio-frequency levels to a communications receiver. This is called a decibel-microvolt, where $1\ \mu V = 1 \times 10^{-6}$ V. |
| **dBV** | The decibel value is obtained with respect to 1 V. |
| **dBV$_{RMS}$** | A dB value measured relative to 1 V$_{RMS}$, where 0 dB = 1 V$_{RMS}$. This value is sometimes used to define measurements in FFT frequency analysis, as described later in this chapter. |
| **dB/bit** | A common term used for specifying the dynamic range or resolution for a pulse-code modulation (PCM) system such as a CD player. This reference is defined by 20/log(2)/bit = 6.02 dB/bit. |
| **dBi** | Decibel isotropic, or gain relative to an isotropic radiator. It is used as the reference when defining antenna gain. |
| **dB/Hz** | Relative noise power in a 1-Hz bandwidth. This term is used often in digital communications and in defining a laser's relative intensity noise (RIN). For a laser system, this is an electrical, not an optical, measurement. A typical RIN for a semiconductor laser is −150 dB/Hz. |
| **dBc** | The dB measurement relative to the carrier power. This measurement is used in 8 VSB digital television. |
| **dBmV** | A cable TV standard that uses a reference of 1 mV across 75 Ω and is used to provide a measurement of the RF level in digital television systems. |

undesired noise signal, it will probably be unintelligible. This situation is made even worse because the receiver itself introduces additional noise.

The noise present in a received radio signal that has been introduced in the transmitting medium is termed **external noise.** The noise introduced by the receiver is termed **internal noise.** The important implications of noise considerations in the study of communications systems cannot be overemphasized.

**External Noise**
noise in a received radio signal that has been introduced by the transmitting medium

**Internal Noise**
noise in a radio signal that has been introduced by the receiver

**Wave Propagation**
movement of radio signals through the atmosphere from transmitter to receiver

## External Noise

***Human-Made Noise*** The most troublesome form of external noise is usually the human-made variety. It is often produced by spark-producing mechanisms such as engine ignition systems, fluorescent lights, and commutators in electric motors. This noise is actually "radiated" or transmitted from its generating sources through the atmosphere in the same fashion that a transmitting antenna radiates desirable electrical signals to a receiving antenna. This process is called **wave propagation**. If the human-made noise exists in the vicinity of the transmitted radio signal and is

within its frequency range, these two signals will "add" together. This is obviously an undesirable phenomenon. Human-made noise occurs randomly at frequencies up to around 500 MHz.

Another common source of human-made noise is contained in the power lines that supply the energy for most electronic systems. In this context the ac ripple in the dc power supply output of a receiver can be classified as noise (an unwanted electrical signal) and must be minimized in receivers that are accepting extremely small intelligence signals. Additionally, ac power lines contain surges of voltage caused by the switching on and off of highly inductive loads such as electrical motors. It is certainly ill-advised to operate sensitive electrical equipment in close proximity to an elevator! Human-made noise is weakest in sparsely populated areas, which explains the location of extremely sensitive communications equipment, such as satellite tracking stations, in desert-type locations.

*Atmospheric Noise* **Atmospheric noise** is caused by naturally occurring disturbances in the earth's atmosphere, with lightning discharges being the most prominent contributors. The frequency content is spread over the entire radio spectrum, but its intensity is inversely related to frequency. It is therefore most troublesome at the lower frequencies. It manifests itself in the static noise that you hear on standard AM radio receivers. Its amplitude is greatest from a storm near the receiver, but the additive effect of distant disturbances is also a factor. This is often apparent when listening to a distant station at night on an AM receiver. It is not a significant factor for frequencies exceeding about 20 MHz.

**Atmospheric Noise**
external noise caused by naturally occurring disturbances in the earth's atmosphere

*Space Noise* The other form of external noise arrives from outer space and is called **space noise.** It is pretty evenly divided in origin between the sun and all the other stars. That originating from our star (the sun) is termed **solar noise.** Solar noise is cyclical and reaches very annoying peaks about every eleven years.

All the other stars also generate this space noise, and their contribution is termed **cosmic noise.** Since they are much farther away than the sun, their individual effects are small, but they make up for this by their countless numbers and their additive effects. Space noise occurs at frequencies from about 8 MHz up to 1.5 GHz ($1.5 \times 10^9$ Hz). While it contains energy at less than 8 MHz, these components are absorbed by the earth's ionosphere before they can reach the atmosphere. The ionosphere is a region above the atmosphere where free ions and electrons exist in sufficient quantity to have an appreciable effect on wave travel. It includes the area from about sixty to several hundred miles above the earth.

**Space Noise**
external noise produced outside the earth's atmosphere

**Solar Noise**
space noise originating from the sun

**Cosmic Noise**
space noise originating from stars other than the sun

## Internal Noise

As stated previously, internal noise is introduced by the receiver itself. Thus, the noise already present at the receiving antenna (external noise) has another component added to it before it reaches the output. The receiver's major noise contribution occurs in its very first stage of amplification, where the desired signal is at its lowest level, and noise injected at that point will be at its largest value in proportion to the intelligence signal. A glance at Figure 2 should help clarify this point. Even though all following stages also introduce noise, their effect is usually negligible with respect to the very first stage because of their much higher signal level. Note that the noise injected between amplifiers 1 and 2 has not appreciably increased the noise on

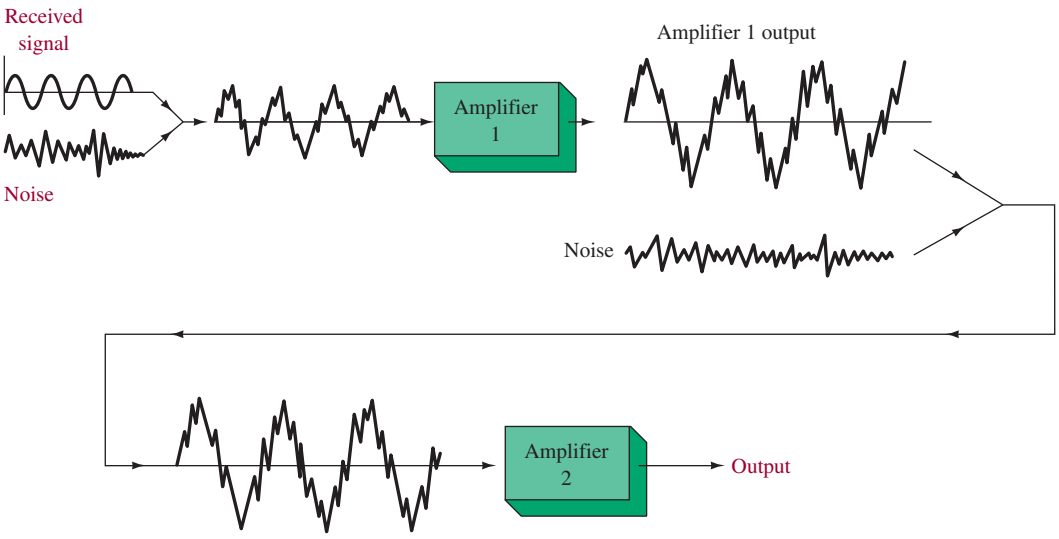


FIGURE 2 Noise effect on a receiver's first and second amplifier stages.

the desired signal, even though it is of the same magnitude as the noise injected into amplifier 1. For this reason, the first receiver stage must be carefully designed to have low noise characteristics, with the following stages being decreasingly important as the desired signal gets larger and larger.

*Thermal Noise* There are two basic types of noise generated by electronic circuits. The first one to consider is due to thermal interaction between the free electrons and vibrating ions in a conductor. It causes the rate of arrival of electrons at either end of a resistor to vary randomly, and thereby varies the resistor's potential difference. Resistors and the resistance within all electronic devices are constantly producing a noise voltage. This form of noise was first thoroughly studied by J. B. Johnson in 1928 and is often termed **Johnson noise.** Since it is dependent on temperature, it is also referred to as **thermal noise.** Its frequency content is spread equally throughout the usable spectrum, which leads to a third designator: **white noise** (from optics, where white light contains all frequencies or colors). The terms *Johnson, thermal,* and *white noise* may be used interchangeably. Johnson was able to show that the power of this generated noise is given by

**Johnson Noise**
another name for thermal noise, first studied by J. B. Johnson

**Thermal Noise**
internal noise caused by thermal interaction between free electrons and vibrating ions in a conductor

**White Noise**
another name for thermal noise because its frequency content is uniform across the spectrum

$$P_n = kT\,\Delta f \tag{10}$$

where $k$ = Boltzmann's constant ($1.38 \times 10^{-23}$ J/K)
$T$ = resistor temperature in kelvin (K)
$\Delta f$ = frequency bandwidth of the system being considered

Since this noise power is directly proportional to the bandwidth involved, it is advisable to limit a receiver to the smallest bandwidth possible. You may be wondering how the bandwidth figures into this. The noise is an ac voltage that has random instantaneous amplitude but a predictable rms value. The frequency of this noise voltage is just as random as the voltage peaks. The more frequencies allowed

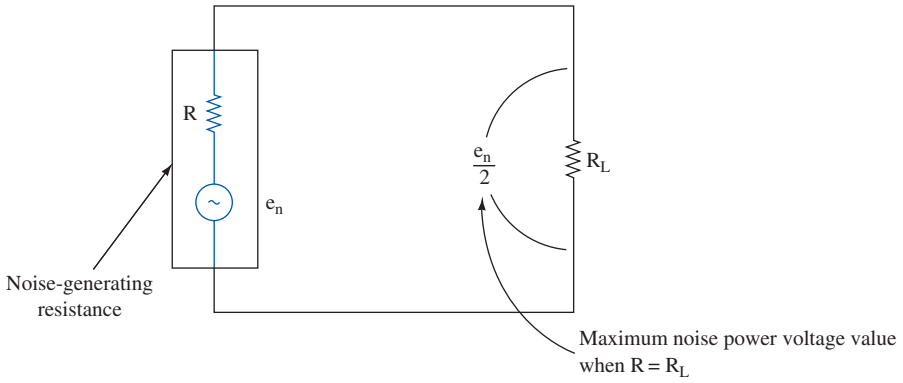


**FIGURE 3** Resistance noise generator.

into the measurement (i.e., greater bandwidth), the greater the noise voltage. This means that the rms noise voltage measured across a resistor is a function of the bandwidth of frequencies included.

Since $P = E^2/R$, it is possible to rewrite Equation (10) to determine the noise voltage ($e_n$) generated by a resistor. Assuming maximum power transfer of the noise source, the noise voltage is split between the load and itself, as shown in Figure 3.

$$P_n = \frac{(e_n/2)^2}{R} = kT\,\Delta f$$

Therefore,

$$\frac{e_n^2}{4} = kT\,\Delta f R$$

$$e_n = \sqrt{4kT\Delta f R} \qquad \textbf{(11)}$$

where $e_n$ is the rms noise voltage and $R$ is the resistance generating the noise. The instantaneous value of thermal noise is not predictable but has peak values generally less than 10 times the rms value from Equation (11). The thermal noise associated with all nonresistor devices is a direct result of their inherent resistance and, to a much lesser extent, their composition. This applies to capacitors, inductors, and all electronic devices. Equation (11) applies to copper wire-wound resistors, with all other types exhibiting slightly greater noise voltages. Thus, dissimilar resistors of equal value exhibit different noise levels, which gives rise to the term **low-noise resistor;** you may have heard this term before but not understood it. Standard carbon resistors are the least expensive variety, but unfortunately they also tend to be the noisiest. Metal film resistors offer a good compromise in the cost/performance comparison and can be used in all but the most demanding low-noise designs. The ultimate noise performance (lowest noise generated, that is) is obtained with the most expensive and bulkiest variety: the wire-wound resistor. We use Equation (11) as a reasonable approximation for all calculations in spite of these variations.

**Low-Noise Resistor**
a resistor that exhibits low levels of thermal noise

## Example 4

*Determine the noise voltage produced by a 1-MΩ resistor at room temperature (17°C) over a 1-MHz bandwidth.*

### Solution

It is helpful to know that $4kT$ at room temperature (17°C) is $1.60 \times 10^{-20}$ Joules.

$$\begin{aligned} e_n &= \sqrt{4kT\,\Delta f R} \\ &= [(1.6 \times 10^{-20})(1 \times 10^{6})(1 \times 10^{6})]^{\frac{1}{2}} \\ &= (1.6 \times 10^{-8})^{\frac{1}{2}} \\ &= 126\ \mu\text{V rms} \end{aligned} \tag{11}$$

From the preceding example we can deduce that an ac voltmeter with an input resistance of 1 MΩ and a 1-MHz bandwidth generates 126 $\mu$V of noise (rms). Signals of about 500 $\mu$V or less would certainly not be measured with any accuracy. A 50-Ω resistor under the same conditions would generate only about 0.9 $\mu$V of noise. This explains why low impedances are desirable in low-noise circuits.

## Example 5

*An amplifier operating over a 4-MHz bandwidth has a 100-Ω source resistance. It is operating at 27°C, has a voltage gain of 200, and has an input signal of 5 $\mu$V rms. Determine the rms output signals (desired and noise), assuming external noise can be disregarded.*

### Solution

To convert °C to kelvin, simply add 273°, so that K = 27°C + 273° = 300 K. Therefore

$$\begin{aligned} e_n &= \sqrt{4kT\,\Delta f R} \\ &= \sqrt{4 \times 1.38 \times 10^{-23}\ \text{J/K} \times 300\ \text{K} \times 4\ \text{MHz} \times 100\ \Omega} \\ &= 2.57\ \mu\text{V rms} \end{aligned} \tag{11}$$

After multiplying the input signal $e_s$ (5 $\mu$V) and noise signal by the voltage gain of 200, the output signal consists of a 1-mV rms signal and 0.514-mV rms noise. This is not normally an acceptable situation. The intelligence would probably be unintelligible!

**Shot Noise**
noise introduced by carriers in the *pn* junctions of semiconductors

***Transistor Noise*** In Example 5, the noise introduced by the transistor, other than its thermal noise, was not considered. The major contributor of transistor noise is called **shot noise.** It is due to the discrete-particle nature of the current carriers in all forms of semiconductors. These current carriers, even under dc conditions, are not moving in an exactly steady continuous flow since the distance they travel varies due to random paths of motion. The name *shot noise* is derived from the fact that when amplified into a speaker, it sounds like a shower of lead shot falling on a metallic surface. Shot noise and thermal noise are additive. Unfortunately, there is no valid formula to calculate its value for a complete transistor where the sources of shot noise are the currents within the emitter–base and collector–base diodes. Hence, the device user must refer to the manufacturer's

data sheet for an indication of shot noise characteristics. The methods of dealing with these data are covered in Section 5. Shot noise generally increases proportionally with dc bias currents except in MOSFETs, where shot noise seems to be relatively independent of dc current levels.

***Frequency Noise Effects*** Two little-understood forms of device noise occur at the opposite extremes of frequency. The low-frequency effect is called **excess noise** and occurs at frequencies below about 1 kHz. It is inversely proportional to frequency and directly proportional to temperature and dc current levels. It is thought to be caused by crystal surface defects in semiconductors that vary at an inverse rate with frequency. Excess noise is often referred to as *flicker noise, pink noise,* or $1/f$ noise. It is present in both bipolar junction transistors (BJTs) and field-effect transistors (FETs).

**Excess Noise**
noise occurring at frequencies below 1 kHz, varying in amplitude inversely proportional to frequency

At high frequencies, device noise starts to increase rapidly in the vicinity of the device's high-frequency cutoff. When the transit time of carriers crossing a junction is comparable to the signal's period (i.e., high frequencies), some of the carriers may diffuse back to the source or emitter. This effect is termed **transit-time noise.** These high- and low-frequency effects are relatively unimportant in the design of receivers since the critical stages (the front end) will usually be working well above 1 kHz and hopefully below the device's high-frequency cutoff area. The low-frequency effects are important, however, to the design of low-level, low-frequency amplifiers encountered in certain instrument and biomedical applications.

**Transit-Time Noise**
noise produced in semiconductors when the transit time of the carriers crossing a junction is close to the signal's period and some of the carriers diffuse back to the source or emitter of the semiconductor

The overall noise intensity versus frequency curves for semiconductor devices (and tubes) have a bathtub shape, as represented in Figure 4. At low frequencies the excess noise is dominant, while in the midrange shot noise and thermal noise predominate, and above that the high-frequency effects take over. Of course, tubes are now seldom used and fortunately their semiconductor replacements offer better noise characteristics. Since semiconductors possess inherent resistances, they generate thermal noise in addition to shot noise, as indicated in Figure 4. The noise characteristics provided in manufacturers' data sheets take into account both the shot and thermal effects. At the device's high-frequency cutoff, $f_{hc}$, the high-frequency effects take over, and the noise increases rapidly.

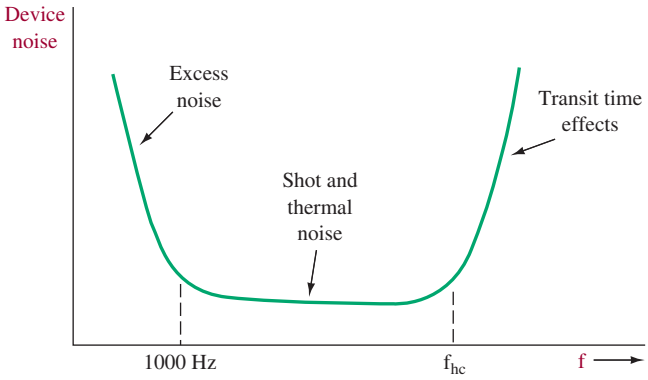


FIGURE 4 Device noise versus frequency.



# 4 Noise Designation and Calculation

## Signal-to-Noise Ratio

**Signal-to-Noise Ratio**
relative measure of desired signal power to noise power

We have thus far dealt with different types of noise without showing how to deal with noise in a practical way. The most fundamental relationship used is known as the **signal-to-noise ratio** (*S/N* ratio), which is a relative measure of the desired signal power to the noise power. The *S/N* ratio is often designated simply as *S/N* and can be expressed mathematically as

$$\frac{S}{N} = \frac{\text{signal power}}{\text{noise power}} = \frac{P_S}{P_N} \tag{12}$$

at any particular point in an amplifier. It is often expressed in decibel form as

$$\frac{S}{N} = 10 \log_{10} \frac{P_S}{P_N} \tag{13}$$

For example, the output of the amplifier in Example 5 was 1 mV rms and the noise was 0.514 mV rms, and thus (remembering that $P = E^2/R$)

$$\frac{S}{N} = \frac{1^2/R}{0.514^2/R} = 3.79 \quad \text{or} \quad 10 \log_{10} 3.79 = 5.78 \text{ dB}$$

## Noise Figure

*S/N* successfully identifies the noise content at a specific point but is not useful in relating how much additional noise a particular transistor has injected into a signal going from input to output. The term **noise figure** (NF) is usually used to specify exactly how noisy a device is. It is defined as follows:

**Noise Figure**
a figure describing how noisy a device is in decibels

$$\text{NF} = 10 \log_{10} \frac{S_i/N_i}{S_o/N_o} = 10 \log_{10} \text{NR} \tag{14}$$

**Noise Ratio**
a figure describing how noisy a device is as a ratio having no units

where $S_i/N_i$ is the signal-to-noise power ratio at the device's input and $S_o/N_o$ is the signal-to-noise power ratio at its output. The term $(S_i/N_i)/(S_o/N_o)$ is called the **noise ratio** (NR). If the device under consideration were ideal (injected no additional noise), then $S_i/N_i$ and $S_o/N_o$ would be equal, the NR would equal 1, and NF = 10 log 1 = 10 × 0 = 0 dB. Of course, this result cannot be obtained in practice.

### Example 6

*A transistor amplifier has a measured S/N power of 10 at its input and 5 at its output.*
*(a) Calculate the NR.*
*(b) Calculate the NF.*
*(c) Using the results of part (a), verify that Equation (14) can be rewritten mathematically as*

$$\text{NF} = 10 \log_{10} \frac{S_i}{N_i} - 10 \log_{10} \frac{S_o}{N_o}$$

**Solution**

(a)
$$\text{NR} = \frac{S_i/N_i}{S_o/N_o} = \frac{10}{5} = 2$$

(b)
$$\text{NF} = 10 \log_{10} \frac{S_i/N_i}{S_o/N_o} = 10 \log_{10} \text{NR} \tag{14}$$
$$= 10 \log_{10} \frac{10}{5} = 10 \log_{10} 2$$
$$= 3 \text{ dB}$$

(c)
$$10 \log \frac{S_i}{N_i} = 10 \log_{10} 10 = 10 \times 1 = 10 \text{ dB}$$
$$10 \log \frac{S_o}{N_o} = 10 \log_{10} 5 = 10 \times 0.7 = 7 \text{ dB}$$

Their difference (10 dB − 7 dB) is equal to the result of 3 dB determined in part (b).

The result of Example 6 is a typical transistor NF. However, for low-noise requirements, devices with NFs down to less than 1 dB are available at a price premium. The graph in Figure 5 shows the manufacturer's NF versus frequency characteristics for the 2N4957 transistor. As you can see, the curve is flat in the mid-frequency range (NF ≃ 2.2 dB) and has a slope of −3 dB/octave at low frequencies (excess noise) and 6 dB/octave in the high-frequency area (transit-time noise). An **octave** is a range of frequency in which the upper frequency is double the lower frequency.

**Octave**
range of frequency in which the upper frequency is double the lower frequency

Manufacturers of low-noise devices usually supply a whole host of curves to exhibit their noise characteristics under as many varied conditions as possible. One of the more interesting curves provided for the 2N4957 transistor is shown in Figure 6. It provides a visualization of the contours of NF versus source resistance and dc collector current for a 2N4957 transistor at 105 MHz. It indicates that noise operation at 105 MHz will be optimum when a dc (bias) collector current of about 0.7 mA

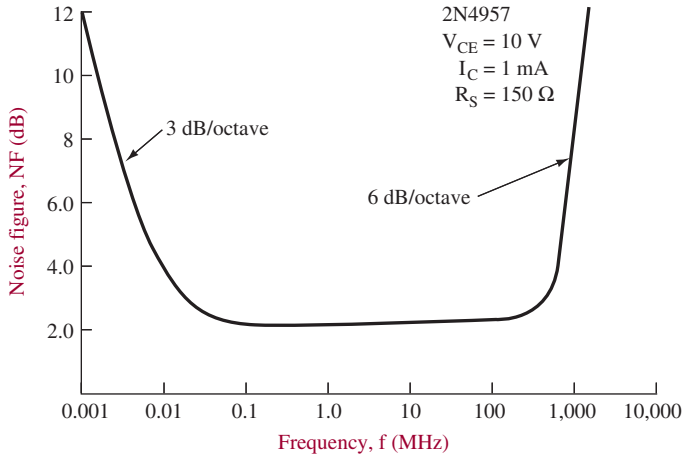


**FIGURE 5** NF versus frequency for a 2N4957 transistor. (Courtesy of Motorola Semiconductor Products, Inc.)



The Agilent N8975A is a high-performance noise figure analyzer designed to make fast, accurate, and repeatable noise figure measurements. (© Agilent Technologies, Inc. 2007 Reproduced with Permission, Courtesy of Agilent Technologies, Inc.)

and source resistance of 350 Ω is utilized because the lowest NF of 1.8 dB occurs under these conditions.

The current state of the art for low-noise transistors offers some surprisingly low numbers. The leading edge for room temperature designs at 4 GHz is an NF of about 0.5 dB using gallium arsenide (GaAs) FETs. At 144 MHz, amplifiers with NFs down to 0.3 dB are being employed. The ultimate in low-noise-amplifier (LNA) design utilizes cryogenically cooled circuits (using liquid helium). Noise figures down to about 0.2 dB at microwave frequencies up to about 10 GHz are thereby made possible.

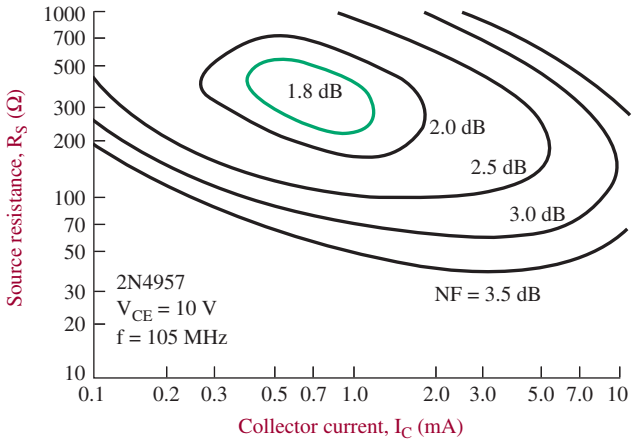


FIGURE 6 Noise contours for a 2N4957 transistor. (Courtesy of Motorola Semiconductor Products, Inc.)

## Reactance Noise Effects

In theory a reactance does not introduce noise to a system. This is true for ideal capacitors and inductors that contain no resistive component. The ideal cannot be attained, but fortunately resistive elements in capacitors and inductors usually have a negligible effect on system noise considerations compared to semiconductors and other resistances.

The significant effect of reactive circuits on noise is its limitation on frequency response. Our previous discussions on noise have assumed an ideal bandwidth that is rectangular in response. Thus, the 10-kHz bandwidth of Example 7 implied a total passage within the 10-kHz range and zero effect outside. In practice, *RC*-, *LC*-, and *RLC*-generated passbands are not rectangular but slope off gradually, with the bandwidth defined as a function of half-power frequencies. This is detailed in Section 6. The equivalent bandwidth ($\Delta f_{eq}$) to be used in noise calculations with reactive circuits is given by

$$\Delta f_{eq} = \frac{\pi}{2} \text{BW} \tag{15}$$

where BW is the 3-dB bandwidth as shown in Section 7 for *RC*, *LC*, or *RLC* circuits. The fact that the "noise" bandwidth is greater than the "3-dB" bandwidth is not surprising. Significant noise is still being passed through a system beyond the 3-dB cutoff frequency.

## Noise Due to Amplifiers in Cascade

We previously specified that the first stage of a system is dominant with regard to noise effect. We are now going to show that effect numerically. **Friiss's formula** is used to provide the overall noise effect of a multistage system.

**Friiss's Formula**
method of determining the total noise produced by amplifier stages in cascade

$$\text{NR} = \text{NR}_1 + \frac{\text{NR}_2 - 1}{P_{G_1}} + \cdots + \frac{\text{NR}_n - 1}{P_{G_1} \times P_{G_2} \times \cdots \times P_{G(n-1)}} \tag{16}$$

where NR = overall noise ratio of $n$ stages
$P_G$ = power gain ratio

### Example 7

*A three-stage amplifier system has a 3-dB bandwidth of 200 kHz determined by an LC-tuned circuit at its input, and operates at 22°C. The first stage has a power gain of 14 dB and an NF of 3 dB. The second and third stages are identical, with power gains of 20 dB and NF = 8 dB. The output load is 300 Ω. The input noise is generated by a 10-kΩ resistor. Calculate*

*(a) the noise voltage and power at the input and the output of this system assuming ideal noiseless amplifiers.*

*(b) the overall noise figure for the system.*

*(c) the actual output noise voltage and power.*

## Solution

(a) The effective noise bandwidth is

$$\Delta f_{\text{eq}} = \frac{\pi}{2}\,\text{BW} \tag{15}$$
$$= \frac{\pi}{2} \times 200\ \text{kHz}$$
$$= 3.14 \times 10^5\ \text{Hz}$$

Thus, at the input,

$$P_n = kT\,\Delta f$$
$$= 1.38 \times 10^{-23}\ \text{J/K} \times (273 + 22)\ \text{K} \times 3.14 \times 10^5\ \text{Hz} \tag{10}$$
$$= 1.28 \times 10^{-15}\ \text{W}$$

and

$$e_n = \sqrt{4kT\ \Delta f R} \tag{11}$$
$$= \sqrt{4 \times 1.28 \times 10^{-15} \times 10 \times 10^3}$$
$$= 7.15\ \mu\text{V}$$

The total power gain is 14 dB + 20 dB + 20 dB = 54 dB.

$$54\ \text{dB} = 10 \log P_G$$

Therefore,

$$P_G = 2.51 \times 10^5$$

Assuming perfect noiseless amplifiers,

$$P_{n\ \text{out}} = P_{n\ \text{in}} \times P_G$$
$$= 1.28 \times 10^{-15}\ \text{W} \times 2.51 \times 10^5$$
$$= 3.22 \times 10^{-10}\ \text{W}$$

Remembering that the output is driven into a 300-Ω load and $P = V^2/R$, we have

$$3.22 \times 10^{-10}\ \text{W} = \frac{(e_{n\ \text{out}})^2}{300\ \Omega}$$
$$e_n = 0.311\ \text{mV}$$

Notice that the noise has gone from microvolts to millivolts without considering the noise injected by each amplifier stage.

(b) Recall that to use Friiss's formula, ratios and not decibels must be used. Thus,

$$P_{G_1} = 14\ \text{dB} = 25.1$$
$$P_{G_2} = P_{G_3} = 20\ \text{dB} = 100$$
$$\text{NF}_1 = 3\ \text{dB} \qquad \text{NR}_1 = 2$$
$$\text{NF}_2 = \text{NF}_3 = 8\ \text{dB} \qquad \text{NR}_2 = \text{NR}_3 = 6.31$$
$$\text{NR} = \text{NR}_1 + \frac{\text{NR}_2 - 1}{P_{G_1}} + \cdots + \frac{\text{NR}_n - 1}{P_{G_1}P_{G_2}\cdots P_{G(n-1)}} \tag{16}$$
$$= 2 + \frac{6.31 - 1}{25.1} + \frac{6.31 - 1}{25.1 \times 100}$$
$$= 2 + 0.21 + 0.002 = 2.212$$

Thus, the overall noise ratio (2.212) converts into an overall noise figure of 10 $\log_{10}$ 2.212 = 3.45 dB:

$$\text{NF} = 3.45 \text{ dB}$$

(c)
$$\text{NR} = \frac{S_i/N_i}{S_o/N_o}$$

$$P_G = \frac{S_o}{S_i} = 2.51 \times 10^5$$

Therefore,

$$\text{NR} = \frac{N_o}{N_i \times 2.51 \times 10^5}$$

$$2.212 = \frac{N_o}{1.28 \times 10^{-15}\,\text{W} \times 2.51 \times 10^5}$$

$$N_o = 7.11 \times 10^{-10}\,\text{W}$$

To get the output noise voltage, since $P = V^2/R$,

$$7.11 \times 10^{-10}\,\text{W} = \frac{e_n^2}{300\ \Omega}$$

$$e_n = 0.462 \text{ mV}$$

Notice that the actual noise voltage (0.462 mV) is about 50% greater than the noise voltage when we did not consider the noise effects of the amplifier stages (0.311 mV).

## Equivalent Noise Temperature

Another way of representing noise is by equivalent noise temperature. It is a convenient means of handling noise calculations involved with microwave receivers (1 GHz and above) and their associated antenna system, especially space communication systems. It allows easy calculation of noise power at the receiver using Equation (2) since the equivalent noise temperature ($T_{\text{eq}}$) of microwave antennas and their coupling networks are then simply additive.

The $T_{\text{eq}}$ of a receiver is related to its noise ratio, NR, by

$$T_{\text{eq}} = T_0(\text{NR} - 1) \tag{17}$$

where $T_0$ = 290 K, a reference temperature in kelvin. The use of noise temperature is convenient since microwave antenna and receiver manufacturers usually provide $T_{\text{eq}}$ information for their equipment. Additionally, for low noise levels, noise temperature shows greater variation of noise changes than does NF, making the difference easier to comprehend. For example, an NF of 1 dB corresponds to a $T_{\text{eq}}$ of 75 K, while 1.6 dB corresponds to 129 K. Verify these comparisons using Equation (17), remembering first to convert NF to NR. Keep in mind that noise temperature is not an actual temperature but is employed because of its convenience.

**Example 8**

*A satellite receiving system includes a dish antenna ($T_{eq}$ = 35 K) connected via a coupling network ($T_{eq}$ = 40 K) to a microwave receiver ($T_{eq}$ = 52 K referred to its input). What is the noise power to the receiver's input over a 1-MHz frequency range? Determine the receiver's NF.*

**Solution**

$$P_n = kT\,\Delta f \tag{10}$$
$$= 1.38 \times 10^{-23}\,\text{J/K} \times (35 + 40 + 52)\,\text{K} \times 1\,\text{MHz}$$
$$= 1.75 \times 10^{-15}\,\text{W}$$
$$T_{eq} = T_0(\text{NR} - 1) \tag{17}$$
$$52\,\text{K} = 290\,\text{K}(\text{NR} - 1)$$
$$\text{NR} = \frac{52}{290} + 1$$
$$= 1.18$$

Therefore, NF = $10 \log_{10} (1.18) = 0.716$ dB.

## Equivalent Noise Resistance

Manufacturers sometimes represent the noise generated by a device with a fictitious resistance termed the equivalent noise resistance ($R_{eq}$). It is the resistance that generates the same amount of noise predicted by $\sqrt{4kT\,\Delta fR}$ as the device does. The device (or complete amplifier) is then assumed to be noiseless in making subsequent noise calculations. The latest trends in noise analysis have shifted away from the use of equivalent noise resistance in favor of using the noise figure or noise temperatures.

## SINAD

When the effects of noise and distortion on an amplifier or receiver are of interest, a specification called SINAD is used. Distortion introduced by a receiver is not random like noise but its effect on the intelligibility in the output is similar. For this reason, many radio receivers are rated using SINAD. This is especially true for FM receivers.

$$\text{SINAD} = 10 \log \frac{S + N + D}{N + D} \tag{18}$$

where $S$ = signal power out
$N$ = noise power out
$D$ = distortion power out

When measuring SINAD, an RF signal modulated by a 400-Hz or 1-kHz audio signal is usually applied to the receiver. The receiver output power is measured to give $S + N + D$. Then a highly selective filter is used to eliminate the 400-Hz or 1-kHz audio output. This leaves just the $N + D$ output, which is measured. SINAD can then be calculated using Equation (18).

**Example 9**

*A receiver is being tested to determine SINAD. A 400-Hz audio signal modulates a carrier that is applied to the receiver. Under these conditions, the output power is 7 mW. Next a filter is used to cancel the 400-Hz portion of the output, and then an output power of 0.18 mW is measured. Calculate SINAD.*

**Solution**

$$\begin{aligned} S + N + D &= 7 \text{ mW} \\ N + D &= 0.18 \text{ mW} \\ \text{SINAD} &= 10 \log \frac{S + N + D}{N + D} \qquad (18) \\ &= 10 \log \frac{7 \text{ mW}}{0.18 \text{ mW}} \\ &= 15.9 \text{ dB} \end{aligned}$$



## 5 Noise Measurement

Noise measurement has become a very sophisticated process. Specialty noise-measuring instruments that offer many computer-controlled functions are available for thousands of dollars. If you become involved with a large number of measurements, you will become familiar with some of these instruments. In this section we look at some general methods of noise measurement that can be accomplished with relatively standard laboratory instrumentation. A simple and reliable method of noise measurement is the case where the signal is equal to the noise. At some convenient point in the system, a power meter is connected and a reading taken of the noise with no signal input. Then an input signal is raised in power level until the monitored power rises by 3 dB (i.e., doubled). At this point the power level of the signal source is noted. This is equal to the effective input noise level of the system.

### Noise Diode Generator

Another noise measurement technique involves using a diode to generate a known amount of noise. In this technique the output impedance of the diode noise generator circuit is matched into the amplifier under test. In these types of measurements, the amplifier is commonly called the **device under test,** or simply *DUT*. The procedure is first to measure the noise power output of the DUT when the dc current to the noise diode is zero. The dc current is then increased until the DUT noise power output is exactly doubled from the original value. The diode dc current is then used in the following equation to determine the noise ratio of the DUT:

**Device Under Test**
an electronic part or system that is being tested

$$\text{NR} = 20 I_{\text{dc}} R \qquad (19)$$

where $R$ is the input impedance of the DUT and the temperature is 290 K (approximately room temperature). The reader is referred to "Semiconductor Noise Figure Considerations," Application Note AN-421 from Motorola Semiconductor Products, Inc. for a derivation of this surprisingly simple and useful relationship.

### Example 10

*An amplifier has an impedance of 50 Ω. Using a matched-impedance diode noise generator, it is found that the DUT has doubled noise output power when the diode has a dc current of 14 mA. Determine the NR and NF for the DUT.*

**Solution**

$$\begin{aligned} \text{NR} &= 20 I_{\text{dc}} R \qquad (19) \\ &= 20 \times 14\ \text{mA} \times 50\ \Omega \\ &= 14 \end{aligned}$$

$$\begin{aligned} \text{NF} &= 10 \log_{10} \text{NR} \qquad (14) \\ &= 10 \log_{10} 14 \\ &= 11.46\ \text{dB} \end{aligned}$$

Notice that in Example 10, the NR is numerically equal to the diode's current in mA. This occurs when the DUT has an impedance of 50 Ω—a most convenient situation since many RF amplifier systems are designed with a 50-Ω impedance. Keep in mind that NR is a dimensionless ratio, however, and not measured in mA.

## Tangential Noise Measurement Technique

Meters capable of accurately measuring the very low levels involved with noise measurements tend to be expensive and of limited use with regard to other applications. A dual-trace oscilloscope with high sensitivity is an exception to this limitation. Unfortunately, a direct noise reading from the scope results in errors for two reasons:

1. Noise is of a highly random nature and is not sinusoidal. Since rms values are required for noise calculations, the conversion from scope peak-to-peak values by dividing by $2\sqrt{2}$ is not accurate.
2. Since the noise peaks are random, their visibility on the scope is influenced by factors such as the scope's intensity setting, the persistence of the CRT's phosphor, and the length of the observation.

**Tangential Method**
method of measuring the amplitude of noise on a signal using an oscilloscope display

The two displays shown in Figure 7 show exactly the same noise signal at two different intensity settings. The measurement can be erroneous by as much as 6 dB. A specially developed technique, known as the **tangential method,** reduces the possible error to less than 1 dB. The noise signal is connected to both channels of a

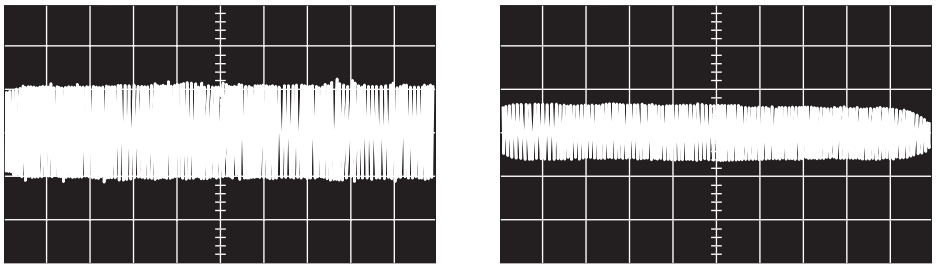

FIGURE 7 Scope display of the same noise signal at two different intensity settings. (Courtesy of Electronic Design.)

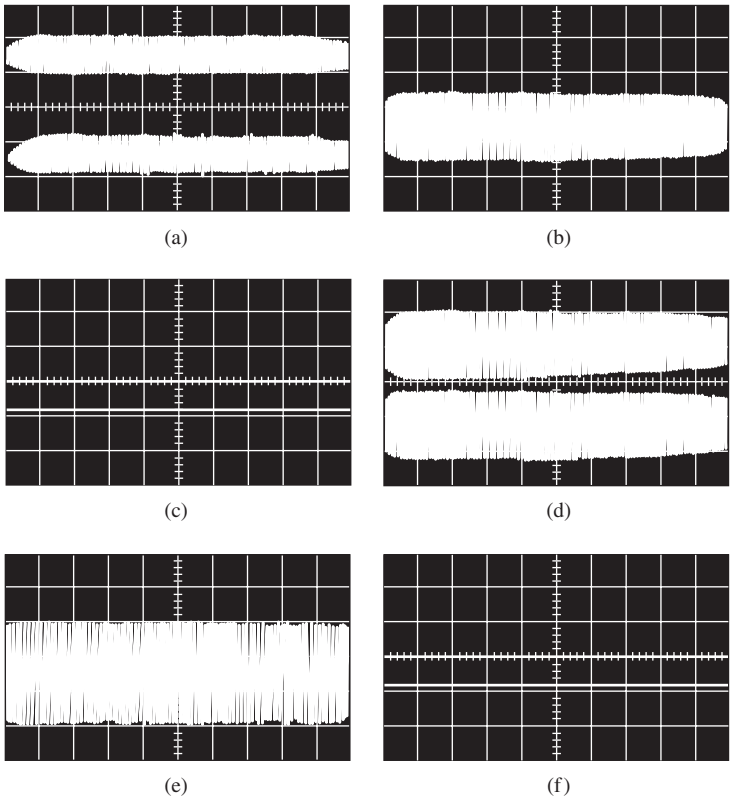


FIGURE 8 (a) With the tangential method, the noise signal is connected to both channels of a dual-channel scope used in the alternate-sweep mode. (b) The offset voltage is adjusted until the traces just merge. (c) The noise signal is then removed. The difference in the noise-free traces is twice the rms noise voltage. (d, e, f) This is repeated at a different intensity to show that the method is independent of intensity. Scope settings are: horizontal = 500 ms/cm, vertical = 20 mV/cm. (Courtesy of Electronic Design.)

dual-trace scope with alternate sweep capability. As shown in Figure 8(a), the two displayed signals are set up with both channels identically calibrated. Then their vertical position is adjusted until the dark band between them just disappears [Figure 8(b)]. Now the noise signal input to both channels is removed, and the resulting separation represents twice the rms noise. In this case (with a vertical sensitivity of 20 mV/cm), the rms noise is 0.8 cm $\times$ 20 mV/cm $\div$ 2, or 8 mV rms. Repeating this process with a different scope intensity setting [Figures 8(d), (e), and (f)] yields the same result.



## 6 Information and Bandwidth

In Section 1 it was mentioned that there are two basic limitations on the performance of a communications system. By now you should have a good grasp on the noise limitation. Quite simply, if the noise level becomes too high, the information is lost. The other limitation is the bandwidth utilized by the communications system. Stated simply once again, the greater the bandwidth, the greater the information that can be

**Information Theory**
concerned with optimization of transmitted information

**Channel**
a band of frequencies

transferred from source to destination. The study of information in communications systems is a science in itself (given the title **information theory**) that uses a highly theoretical method of analysis. It is beyond our intentions here, but if you pursue advanced studies, you will hear much more about it. Information theory is the study of information to provide for the most efficient use of a band of frequencies (a **channel**) for electrical communications.

You might ask: Why is efficient channel utilization so important? The band of usable frequencies is limited, and we are living in a world increasingly dependent on electrical communications. Regulatory agencies (the Federal Communications Commission [FCC] in the United States) allocate the channel that may be used for a given application in a given area. This is done to minimize interference possibilities that will exist with two different signals working at the same frequency. The information explosion of recent years has taxed the total available frequency spectrum to the point where getting the most information from the smallest range of frequencies is in fact quite important.

**Hartley's Law**
information that can be transmitted is proportional to the product of the bandwidth times the time of transmission

A formal relationship between bandwidth and information was developed by R. Hartley of Bell Laboratories in 1928 and is called **Hartley's law.** It states that the information that can be transmitted is proportional to the product of the bandwidth utilized times the time of transmission. In simpler terms it means the greater the bandwidth, the more information that can be transmitted. Expressed as an equation, Hartley's law is

$$\text{information} \propto \text{bandwidth} \times \text{time of transmission} \tag{20}$$

As an example, consider the transmission of a musical performance. The full amount of information available to the human ear is contained in the range of frequencies from just above 0 Hz up to about 15 kHz. The allocated bandwidth of standard AM stations is about 30 kHz. On the other hand, FM stations are allocated a larger bandwidth (200 kHz), which allows the full amount of information (up to 15 kHz) to be reproduced at the receiver. This helps explain the better fidelity available with FM as compared to AM in our two basic commercial radio bands.* This is an example of greater bandwidth allowing a greater information capability and substantiates Hartley's law.

## Understanding the Frequency Spectra

As stated by Hartley's law, the bandwidths of communication systems impose limitations on their information capacity. For example, the AM band has inherent limitations on its information capacity due to limited bandwidth. While the AM band may be suitable for audio transmission, transmission of a television system over the bandwidth allocated for AM transmission would hardly be acceptable. The United States allocates a 6-MHz bandwidth per channel for analog television transmission. Obviously, TV must require a great deal more information capacity than AM radio (AM radio bandwidth = 30 kHz). Television transmission uses a bandwidth 200 times that used for an AM radio-band transmission. This significant increase in bandwidth requirement is primarily due to the complexity of the video signal. The video signal contains many high-frequency components, including the color subcarrier (a sinusoid)

* This example has been oversimplified for reasons that will become obvious as you study AM and FM in subsequent chapters. Its conclusion remains valid, however.

and the luminance (black/white information), which contains many pulse-type waveforms. It will be shown that a pulse-type waveform requires a much larger bandwidth for transmission than a sinusoid at the same frequency.

**Fourier Analysis**
method of representing complex repetitive waveforms by sinusoidal components

A method of analyzing complex repetitive waveforms is known as **Fourier analysis.** It permits any complex repetitive waveform to be resolved into a series of sine or cosine waves (possibly infinite in number for an ideal system with infinite bandwidth) and possibly a dc component (when necessary). The mathematical tool provided in Fourier analysis helps one to understand the meaning of harmonics and the complex waves of which they are a part and also to obtain insight into factors relating to distortion effects.

The expressions for selected periodic waveforms are provided in Table 4 on next page. The Fourier series for a square wave, shown in Table 4(c), is made up of a summation of sinusoids multiplied by a constant $4V/\pi$. Note that each consecutive sinusoid is increasing in frequency.

$$\sin\omega t + \frac{1}{3}\sin 3\omega t + \frac{1}{5}\sin 5\omega t + \cdots$$

The frequency sin $\omega t$ is called the fundamental frequency of the waveform. The component $\frac{1}{3}$ sin $3\omega t$ is called the third harmonic. Sin $5\omega t$ is considered the fifth harmonic, and so on, until the bandwidth of the system is reached. The $\frac{1}{3}$ and $\frac{1}{5}$ values simply indicate that the amplitude of each harmonic is decreasing as the frequency increases.

In can be shown with a math software package that the series expressions for complex repetitive waveforms are indeed constructed of a series of sinusoids consisting of its fundamental frequency and many harmonic frequencies. Figure 9 shows the construction of a complex repetitive waveform: a square wave. It consists of its fundamental frequency (or first harmonic) as well as a multiple of harmonic frequencies. Figure 9(a) shows the fundamental frequency. Figure 9(b) shows the addition of the first and third harmonics, and Figure 9(c) shows the addition of the first, third, and fifth harmonics.

Although somewhat distorted, Figure 9(c) is beginning to resemble a square wave. This required the addition of third and fifth harmonics to the fundamental frequency. With the addition of more harmonics, the wave rapidly approaches an ideal square wave. This is demonstrated in Figures 10(a) and (b), where 13 and 51 harmonics are included. These figures show that the square wave is better defined as

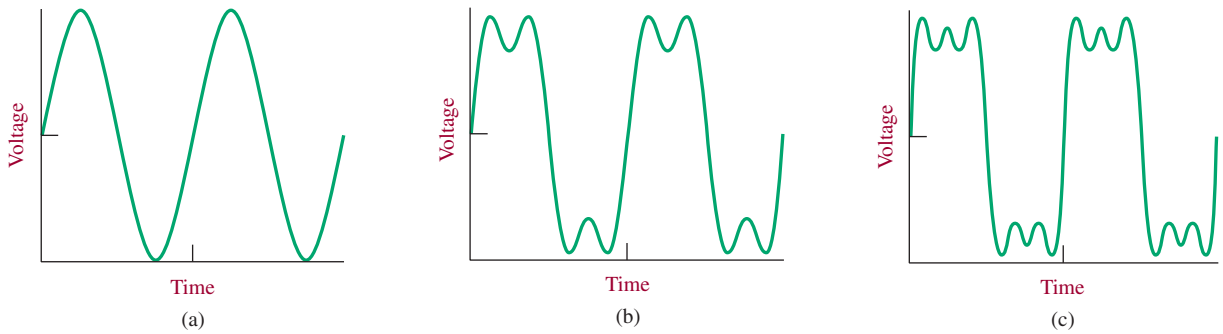


FIGURE 9 (a) Fundamental frequency (sin $\omega t$); (b) the addition of the first and third harmonics (sin$\omega t$ + $\frac{1}{3}$ sin $3\omega t$); (c) the addition of the first, third, and fifth harmonics (sin $\omega t$ + $\frac{1}{3}$ sin $3\omega t$ + $\frac{1}{5}$ sin $5\omega t$).

## Table 4 Fourier Expressions for Selected Periodic Waveforms, $f = 1/T$, $2\pi f = \omega$

(a)

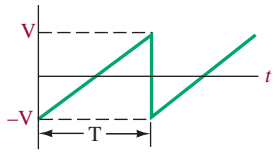


$$v = \frac{2V}{\pi}\left(\sin \omega t + \frac{1}{2}\sin 2\omega t + \frac{1}{3}\sin 3\omega t + \frac{1}{4}\sin 4\omega t + \cdots\right)$$

(b)

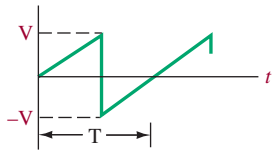


$$v = \frac{2V}{\pi}\left(\sin \omega t - \frac{1}{2}\sin 2\omega t + \frac{1}{3}\sin 3\omega t - \frac{1}{4}\sin 4\omega t + \cdots\right)$$

(c)

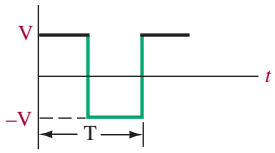


$$v = \frac{4V}{\pi}\left(\sin \omega t + \frac{1}{3}\sin 3\omega t + \frac{1}{5}\sin 5\omega t + \cdots\right)$$

(d)

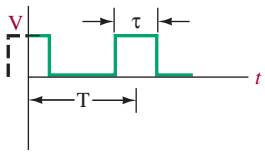


$$v = V\frac{\tau}{T} + 2V\frac{\tau}{T}\left[\frac{\sin \pi(\tau/T)}{\pi\tau T}\cos \omega t + \frac{\sin 2\pi(\tau/T)}{2\pi(\tau/T)}\cos 2\omega t + \frac{\sin 3\pi(\tau/T)}{3\pi(\tau/T)}\cos 3\omega t + \cdots\right]$$

(e)

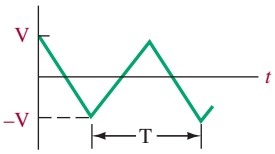


$$v = \frac{8V}{\pi^2}\left[\cos \omega t + \frac{1}{(3)^2}\cos 3\omega t + \frac{1}{(5)^2}\cos 5\omega t + \cdots\right]$$

(f)

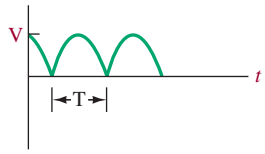


$$v = \frac{2V}{\pi}\left[1 + \frac{2\cos 2\omega t}{3} - \frac{2\cos 4\omega t}{15} + \cdots (-1)^{n/2}\frac{2\cos n\omega t}{n^2 - 1}\cdots\right] (n \text{ even})$$

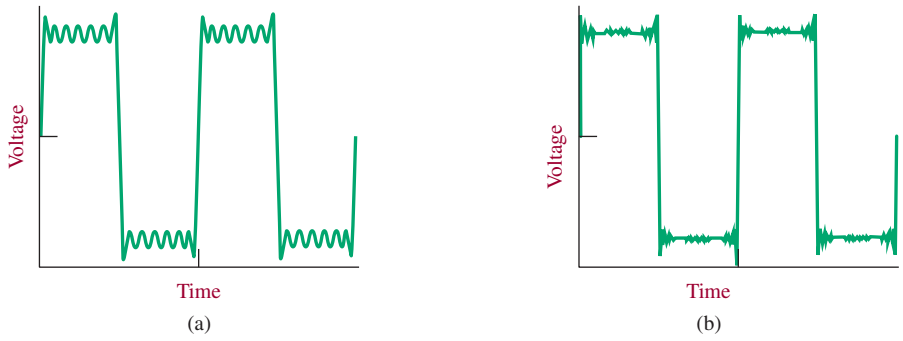


FIGURE 10 Square waves containing: (a) 13 harmonics; (b) 51 harmonics.

the bandwidth is increased, at the expense of additional bandwidth. Of course no transmission media is ideal; therefore, it should be expected that some loss of signal will occur. This loss in information results in a square wave with edges that are not as sharp as the ideal.

The previous discussion demonstrates that the square wave consists of many harmonic frequencies, which underscores the importance of providing a communications system with sufficient bandwidth to pass the minimal required information.

The application of Fourier analysis when using oscilloscopes and spectrum analyzers is provided through the use of the fast Fourier transform **(FFT).** The FFT is a commonly used signal-processing technique that converts (transforms) time-varying signals to their frequency components. The FFT uses sampled (discrete) values to generate the frequency information. The FFT algorithm (mathematical routine) then converts the sampled information into its frequency components.

**FFT**
a technique for converting time-varying information to its frequency component

Examples of obtaining the FFT for a 1-kHz sinusoid and a 1-kHz square wave are given next. It has already been shown that the square wave requires a significant number of harmonics (bandwidth) for it to be generated, whereas the sine wave contains only one frequency component.

A 1-kHz sinusoid was input into a Tektronix TDS 340 Digital Sampling Oscilloscope, which has the FFT math option. Figure 11(a) shows the 1-kHz sinusoid and the resulting FFT of the sinusoid. As shown in Figure 11(a), the horizontal display for the FFT of the 1-kHz waveform has been set to 500 Hz per division, which is indicated as the *frequency step* (500 Hz/division). The spike of the FFT waveform represents the input sine-wave frequency and is two divisions from the start of the FFT **frequency domain record,** or at a frequency of 2 × 500 Hz, or 1 kHz, which is the frequency of the input sine wave (1 kHz). The start of the frequency domain record always begins at DC, or 0 Hz. The amplitude of the spike is expressed in dBV rms when a measurement is being made. The term dBV rms expresses the measured value relative to 1 V rms. In this case, no vertical value or scale is specified. The noisy information below the kHz frequency spike is just that, noise.

**Frequency Domain Record**
data points generated by the time to frequency conversion using the FFT

The input signal is being sampled at a rate of 20 kS/s, or 20,000 samples per second. The minimum sample frequency must be at least twice the frequency being analyzed, or in this case 2 × 1 kHz, or 2 kS/s (2000 samples per second). The minimum sample frequency is called the Nyquist sampling rate. In this example, a

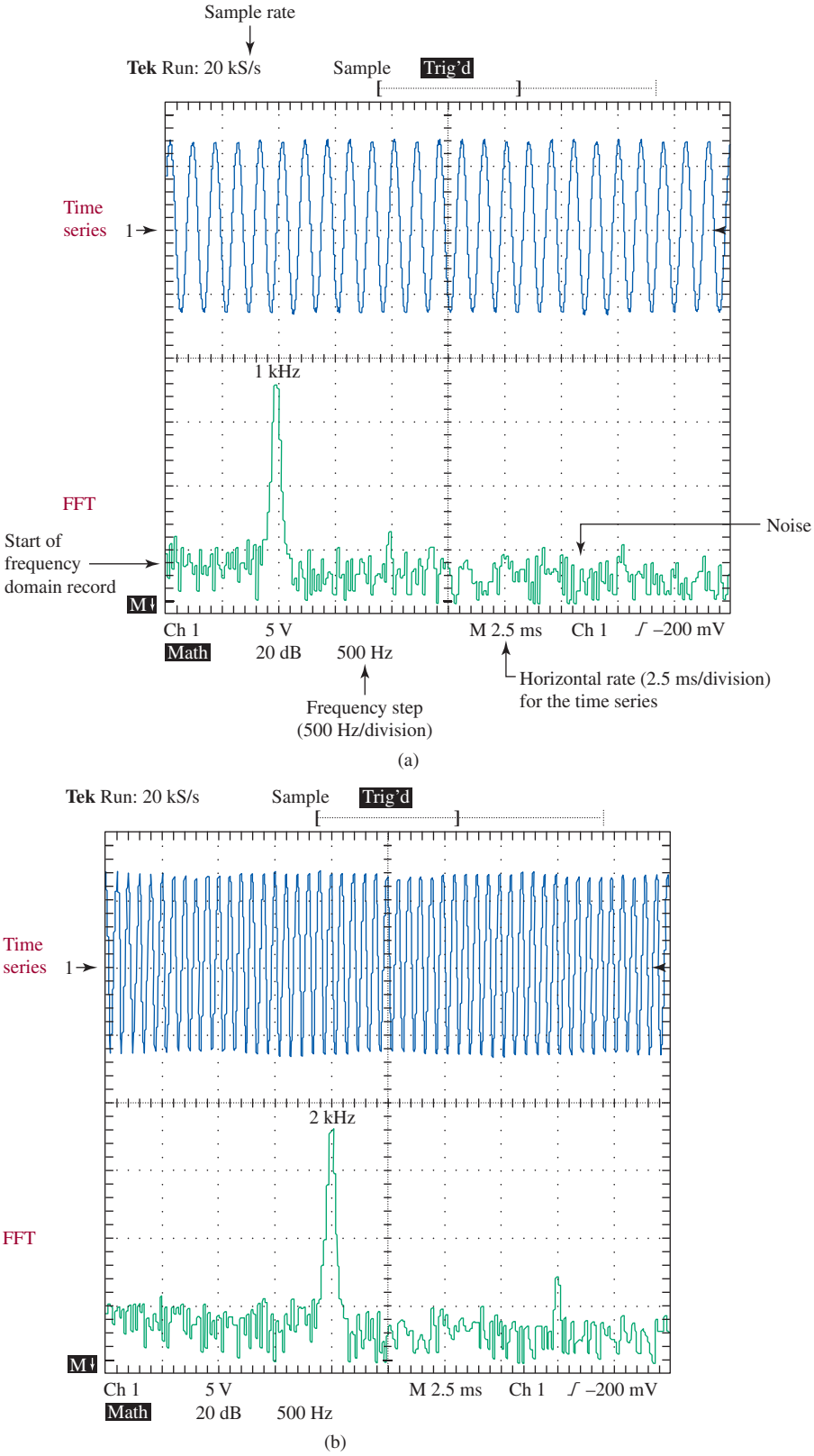


FIGURE 11 (a) A 1-kHz sinusoid and its FFT representation; (b) a 2-kHz sinusoid and its FFT representation.

sample rate of 20 kS/s will not introduce any errors. If an incorrect sample rate is selected, then **aliasing,** or undersampling, is created; the resulting signal waveform will be distorted and incorrect frequencies will be displayed. An example of an improperly selected sample rate and a distorted waveform is shown in Section 9.

**Aliasing**
errors that occur when the input frequency exceeds one-half the sample rate

Another example of reading the FFT information is shown in Figure 11(b). In this case, a 2-kHz sinusoid was input into the oscilloscope. The horizontal display for the FFT is still set to 500 Hz per division. The frequency component displayed is 4 × 500 Hz, or 2 kHz, once again the frequency of the input sinusoid.

Next, a 1-kHz square has been input into the oscilloscope and the FFT option selected. The repetitive square wave is shown at the top of Figure 12. The FFT of the square wave is shown at the bottom. The horizontal scale is 2.5 kHz per division. Notice that the waveform contains several frequency components. In fact, the first frequency component is at 1 kHz, the second is at 3 kHz, the third is at 5 kHz, and so on. This picture shows that the square wave contains the multiple harmonics (first, third, fifth, …). This is the result predicted by Equation (c) in Table 4, where it states that a square wave is constructed by a series of sine waves of increasing frequency and decreasing amplitude.

The square wave shown in Figure 12 has nice sharp edges. The high-frequency components, as shown in the FFT, indicate the contribution of the higher harmonic values to generating a well-shaped square wave. What if the square wave were transmitted through a bandwidth-limited channel such as a telephone voice channel, which is band-limited to about 3 kHz? A 1-kHz square wave was fed

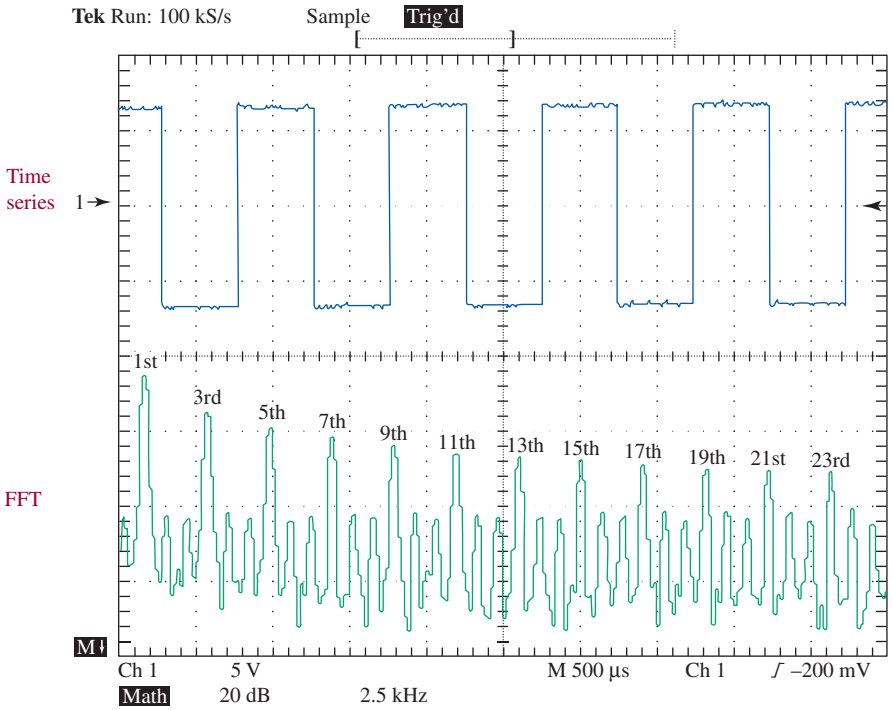


FIGURE 12 A 1-kHz square wave and its FFT representation.

through the low-pass filter shown in Figure 13(a) to simulate transmission through a bandwidth-limited channel. Note the poor quality of the square wave, shown in Figure 13(b). The FFT of the waveform shows that the higher harmonic values are severely attenuated, meaning that there is a loss of detail (information) through this bandwidth-limited system. These data can still be used in communications, but if the frequency information lost in the channel is needed for proper signal or data representation, then the loss of information may not be recoverable. For an analog system, this loss of information could result in noise and distortion. For a digital system, the loss of information could result in an increased bit error rate (BER). For the square wave, some of the features of the original signal (i.e., sharpness of the square wave) are lost. Signal processing may be required to regenerate the square wave.

This discussion introduced the fundamentals of frequency analysis in communication systems. It should be understood that Fourier analysis is more than just a useful mathematical equation representing a wave. The sine or cosine waves are physically real and measurable, as demonstrated by the FFT examples.

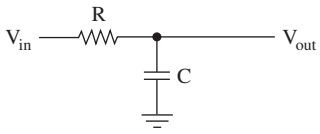


(a)

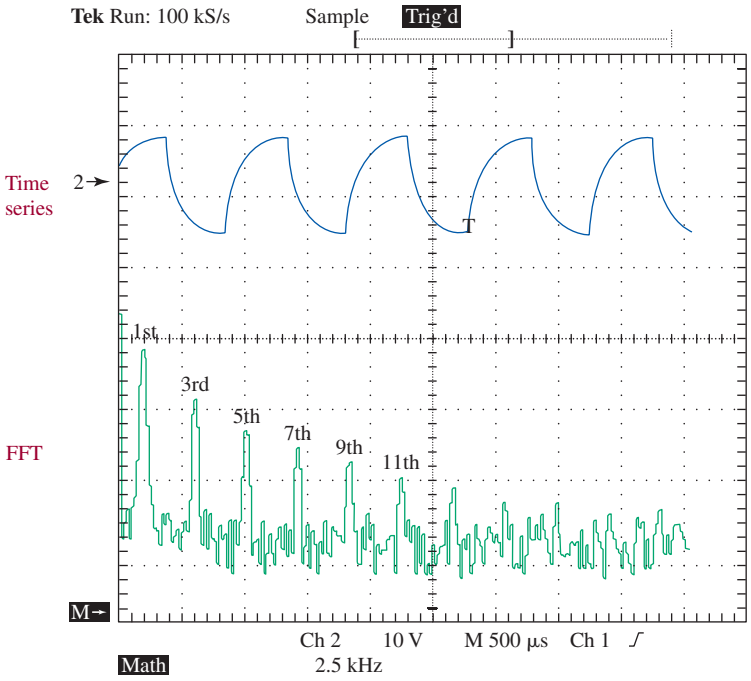


(b)

FIGURE 13 (a) A low-pass filter simulating a bandwidth-limited communications channel; (b) the resulting time series and FFT waveforms after passing through the low-pass filter.



# 7 *LC* Circuits

The remaining sections of this chapter cover some basic characteristics of *LC* circuits and oscillators. This material may be a review for you, but its importance to subsequent communication circuit study merits inclusion at this time.

## Practical Inductors and Capacitors

Practical inductors (also referred to as *chokes* or *coils*) used at RF frequencies and above have an inductance rating in henries and a maximum current rating. Similarly, capacitors have a capacitance rating in farads and a maximum voltage rating. When selecting coils and capacitors for use at radio frequencies and above, an additional characteristic must be considered—the **quality** ($Q$) of the component. The $Q$ is a ratio of the energy stored to that which is lost in the component.

**Quality**
ratio of energy stored to energy lost in a component

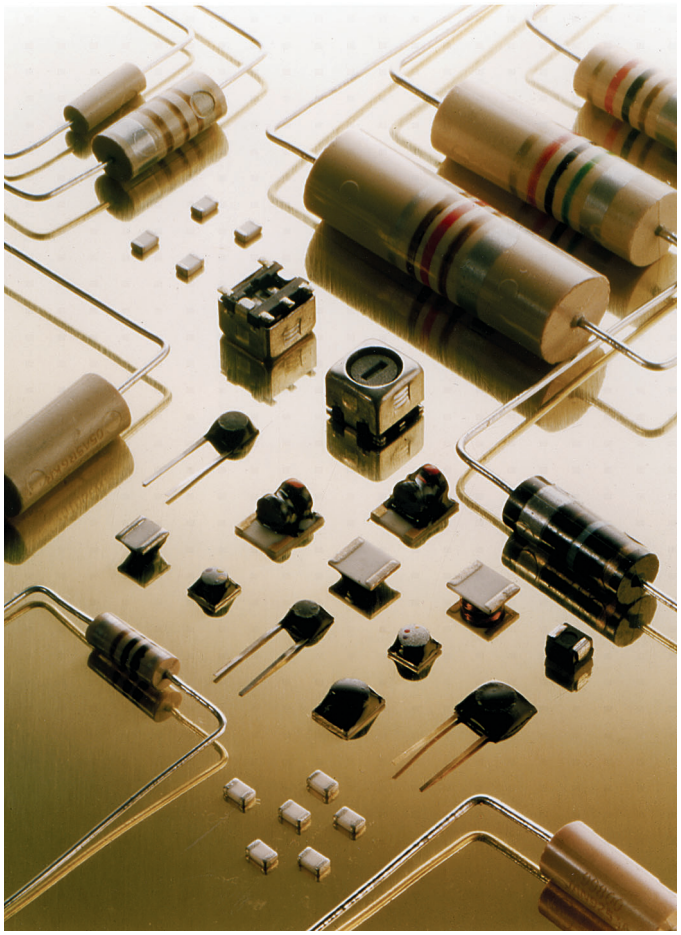

Inductors with axial leads or surface mount device (smd) capability. (Courtesy of API Delevan, Inc.)

**Leakage**
loss of electrical energy between the plates of a capacitor

Inductors store energy in the surrounding magnetic field and lose (dissipate) energy in their winding resistance. A capacitor stores energy in the electric field between its plates and primarily loses energy due to **leakage** between the plates.

For an inductor,

$$Q = \frac{\text{reactance}}{\text{resistance}} = \frac{\omega L}{R} \tag{21}$$

where $R$ is the series resistance distributed along the coil winding. The required $Q$ for a coil varies with circuit application. Values up to about 500 are generally available.

For a capacitor,

$$Q = \frac{\text{susceptance}}{\text{conductance}} = \frac{\omega C}{G} \tag{22}$$

where $G$ is the value of conductance through the dielectric between the capacitor plates. Good-quality capacitors used in radio circuits have typical $Q$ factors of 1000.

At higher radio frequencies (VHF and above—see Table 1) the $Q$ for inductors and capacitors is generally reduced by factors such as radiation, absorption, lead inductance, and package/mounting capacitance. Occasionally, an inverse term is used rather than $Q$. It is called the component **dissipation** ($D$) and is equal to $1/Q$. Thus $D = 1/Q$, a term used more often in reference to a capacitor.

**Dissipation**
inverse of quality factor

## Resonance

**Resonance**
balanced condition between the inductive and capacitive reactance of a circuit

**Resonance** can be defined as a circuit condition whereby the inductive and capacitive reactance have been balanced ($X_L = X_C$). Consider the series *RLC* circuit shown in Figure 14. In this case, the total impedance, $Z$, is provided by the formula

$$Z = \sqrt{R^2 + (X_L - X_C)^2}$$

An interesting effect occurs at the frequency where $X_L$ is equal to $X_C$. That frequency is termed the resonant frequency, $f_r$. At $f_r$ the circuit impedance is equal to the resistor value (which might only be the series winding resistance of the inductor). That result can be shown from the equation above because when $X_L = X_C$, $X_L - X_C$ equals zero, so that $Z = \sqrt{R^2 + 0^2} = \sqrt{R^2} = R$. The resonant frequency can be determined by finding the frequency where $X_L = X_C$.

$$X_L = X_C$$

$$2\pi f_r L = \frac{1}{2\pi f_r C}$$

$$f_r^2 = \frac{1}{4\pi^2 LC}$$

$$f_r = \frac{1}{2\pi\sqrt{LC}} \quad \text{(Hz)} \tag{23}$$

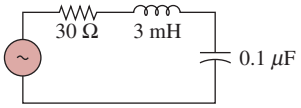


FIGURE 14 Series *RLC* circuit.

## Example 11

*Determine the resonant frequency for the circuit shown in Figure 14. Calculate its impedance when $f = 12$ kHz.*

### Solution

$$f_r = \frac{1}{2\pi\sqrt{LC}} \tag{23}$$
$$= \frac{1}{2\pi\sqrt{3\text{ mH} \times 0.1\ \mu\text{F}}}$$
$$= 9.19\text{ kHz}$$

At 12 kHz,

$$X_L = 2\pi fL$$
$$= 2\pi \times 12\text{ kHz} \times 3\text{ mH}$$
$$= 226\ \Omega$$

$$X_C = \frac{1}{2\pi fC}$$
$$= \frac{1}{2\pi \times 12\text{ kHz} \times 0.1\ \mu\text{F}}$$
$$= 133\ \Omega$$

$$Z = \sqrt{R^2 + (X_L - X_C)^2}$$
$$= \sqrt{30^2 + (226 - 133)^2}$$
$$= 97.7\ \Omega$$

This circuit contains more inductive than capacitive reactance at 12 kHz and is therefore said to look inductive.

The impedance of the series *RLC* circuit is minimum at its resonant frequency and equal to the value of *R*. A graph of its impedance, *Z*, versus frequency has the shape of the curve shown in Figure 15(a). At low frequencies the circuit's impedance is very high because $X_C$ is high. At high frequencies $X_L$ is very high and thus *Z* is high. At resonance, when $f = f_r$, the circuit's $Z = R$ and is at its minimum value. This impedance characteristic can provide a filter effect, as shown in Figure 15(b). At $f_r$, $X_L = X_C$ and thus

$$e_{out} = e_{in} \times \frac{R_2}{R_1 + R_2}$$

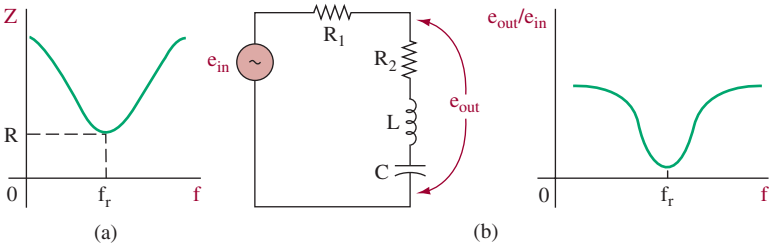


FIGURE 15 Series *RLC* circuit effects.

by the voltage-divider effect. At all other frequencies, the impedance of the *LC* combination goes up (from 0 at resonance) and thus $e_{out}$ goes up. The response for the circuit in Figure 15(b) is termed a band-reject, or notch, filter. A "band" of frequencies is being "rejected" and a "notch" is cut into the output at the resonant frequency, $f_r$.

Example 12 shows that the filter's output increases as the frequency is increased. Calculation of the circuit's output for frequencies below resonance would show a similar increase and is left as an exercise at the end of the chapter. The band-reject, or notch, filter is sometimes called a trap because it can "trap" or get rid of a specific range of frequencies near $f_r$. A trap is commonly used in a television receiver, where rejection of some specific frequencies is necessary for good picture quality.

## Example 12

*Determine $f_r$ for the circuit shown in Figure 15(b) when $R_1 = 20\ \Omega$, $R_2 = 1\ \Omega$, $L = 1$ mH, $C = 0.4\ \mu$F, and $e_{in} = 0$ mV. Calculate $e_{out}$ at $f_r$ and 12 kHz.*

### Solution

The resonant frequency is

$$f_r = \frac{1}{2\pi\sqrt{LC}} = 7.96 \text{ kHz} \tag{23}$$

At resonance,

$$e_{\text{out}} = e_{\text{in}} \times \frac{R_2}{R_1 + R_2} = 50 \text{ mV} \times \frac{1\ \Omega}{1\ \Omega + 20\ \Omega} = 2.38 \text{ mV}$$

At $f = 12$ kHz,

$$X_L = 2\pi fL = 2\pi \times 12 \text{ kHz} \times 1 \text{ mH} = 75.4\ \Omega$$

and

$$X_C = \frac{1}{2\pi fC} = \frac{1}{2\pi \times 12 \text{ kHz} \times 0.4\ \mu\text{F}} = 33.2\ \Omega$$

Thus,

$$Z_{\text{total}} = \sqrt{(R_1 + R_2)^2 + (X_L - X_C)^2} = \sqrt{(20\ \Omega + 1\ \Omega)^2 + (75.4\ \Omega - 33.2\ \Omega)^2} = 47.1\ \Omega$$

and

$$Z_{out} = \sqrt{R_2^2 + (X_L - X_C)^2} = 42.2\ \Omega$$

$$e_{out} = 50\ \text{mV} \times \frac{42.2\ \Omega}{47.1\ \Omega}$$

$$= 44.8\ \text{mV}$$

## *LC* Bandpass Filter

If the filter's configuration is changed to that shown in Figure 16(a), it is called a bandpass filter and has a response as shown at Figure 16(b). The term $f_{lc}$ is the low-frequency cutoff where the output voltage has fallen to 0.707 times its maximum value and $f_{hc}$ is the high-frequency cutoff. The frequency range between $f_{lc}$ and $f_{hc}$ is called the filter's bandwidth, usually abbreviated BW. The BW is equal to $f_{hc} - f_{lc}$, and it can be shown mathematically that

$$\text{BW} = \frac{R}{2\pi L} \tag{24}$$

where BW = bandwidth (Hz)
$R$ = total circuit resistance
$L$ = circuit inductance

The filter's quality factor, $Q$, provides a measure of how selective (narrow) its passband is compared to its center frequency, $f_r$. Thus,

$$Q = \frac{f_r}{\text{BW}} \tag{25}$$

As stated earlier, the quality factor, $Q$, can also be determined as

$$Q = \frac{\omega L}{R} \tag{26}$$

where $\omega L$ = inductive reactance at resonance
$R$ = total circuit resistance

As $Q$ increases, the filter becomes more selective; that is, a smaller passband (narrower bandwidth) is allowed. A major limiting factor in the highest attainable $Q$ is

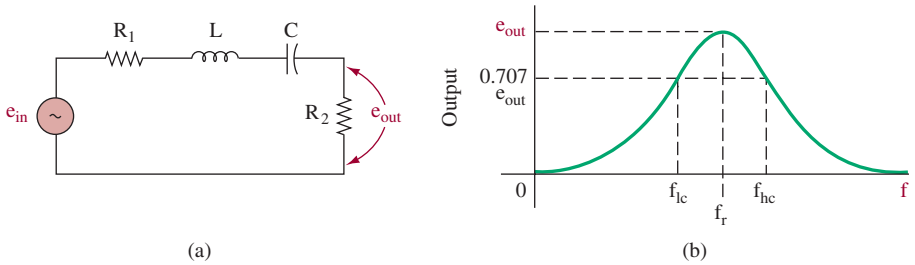


FIGURE 16 (a) *LC* bandpass filter and (b) response.

the resistance factor shown in Equation (21). To obtain a high $Q$, the circuit resistance must be low. Quite often, the limiting factor becomes the winding resistance of the inductor itself. The turns of wire (and associated resistance) used to make an inductor provide this limiting factor. To obtain the highest $Q$ possible, larger wire (with less resistance) could be used, but then greater cost and physical size to obtain the same amount of inductance is required. Quality factors ($Q$) approaching 1000 are possible with very high quality inductors.

## Example 13

*A filter circuit of the form shown in Figure 16(a) has a response as shown in Figure 17. Determine the*
*(a) bandwidth.*
*(b) Q.*
*(c) value of inductance if $C = 0.001\ \mu F$.*
*(d) total circuit resistance.*

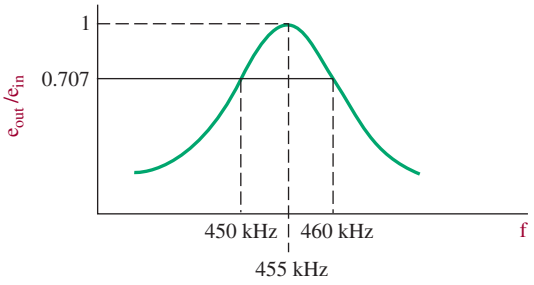


FIGURE 17 Response curve for Example 13.

### Solution

(a) From Figure 17, the BW is simply the frequency range between $f_{hc}$ and $f_{lc}$ or 460 kHz − 450 kHz = 10 kHz.
(b) The filter's peak output occurs at 455 kHz.

$$Q = \frac{f_r}{\text{BW}} \tag{25}$$
$$= \frac{455\ \text{kHz}}{10\ \text{kHz}}$$
$$= 45.5\ \text{kHz}$$

(c) Equation (23) can be used to solve for $L$ because $f_r$ and $C$ are known.

$$f_r = \frac{1}{2\pi\sqrt{LC}} \tag{23}$$
$$455\ \text{kHz} = \frac{1}{2\pi\sqrt{L \times 0.001\ \mu\text{F}}}$$
$$L = 0.12\ \text{mH}$$

(d) Equation (24) can be used to solve for total circuit resistance because the BW and $L$ are known.

$$\text{BW} = \frac{R}{2\pi L} \tag{24}$$

$$10\ \text{kHz} = \frac{R}{2\pi \times 0.12\ \text{mH}}$$

$$R = 10 \times 10^3\ \text{Hz} \times 2\pi \times 0.12 \times 10^{-3}\ \text{H}$$

$$= 7.52\ \Omega$$

The frequency-response characteristics of *LC* circuits are affected by the ratio of $L$ and $C$. Different values of $L$ and $C$ can be used to exhibit resonance at a specific frequency. A high $L/C$ ratio yields a more narrowband response, while lower $L/C$ ratios provide a wider frequency response. This effect can be verified by examining the effect of changing $L$ in Equation (24).

## Parallel *LC* Circuits

A parallel *LC* circuit and its impedance versus frequency characteristic is shown in Figure 18. The only resistance shown for this circuit is the inductor's winding resistance and is effectively in series with the inductor as shown. Notice that the impedance of the parallel *LC* circuit reaches a maximum value at the resonant frequency, $f_r$, and falls to a low value on either side of resonance. As shown in Figure 18, the maximum impedance is

$$Z_{max} = Q^2 \times R \tag{27}$$

Equations (23) to (25) and (21) for series *LC* circuits also apply to parallel *LC* circuits when $Q$ is greater than 10 ($Q > 10$), the usual condition.

**Tank Circuit**
parallel *LC* circuit

The parallel *LC* circuit is sometimes called a **tank circuit.** Energy is stored in each reactive element ($L$ and $C$), first in one and then released to the other. The transfer of energy between the two elements will occur at a natural rate equal to the resonant frequency and is sinusoidal in form.

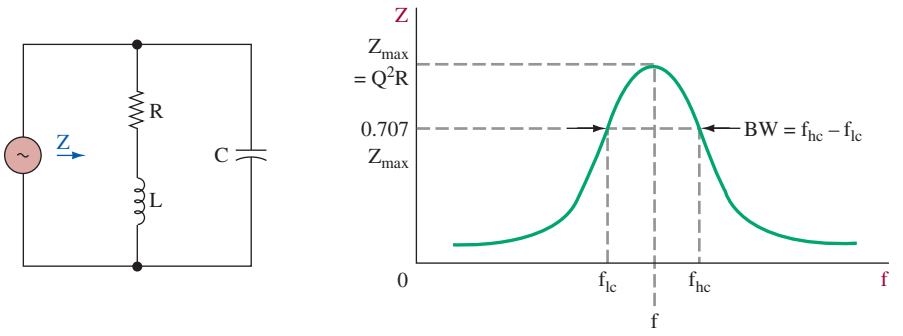


FIGURE 18 Parallel *LC* circuit and response.

**Example 14**

*A parallel LC tank circuit is made up of an inductor of 3 mH and a winding resistance of 2 Ω. The capacitor is 0.47 μF. Determine*
*(a) $f_r$.*
*(b) Q.*
*(c) $Z_{max}$.*
*(d) BW.*

**Solution**

(a)
$$f_r = \frac{1}{2\pi\sqrt{LC}} \quad (23)$$
$$= \frac{1}{2\pi\sqrt{3\text{ mH} \times 0.47\ \mu\text{F}}}$$
$$= 4.24\text{ kHz}$$

(b)
$$Q = \frac{X_L}{R} \quad (21)$$

where $X_L = 2\pi fL$
$= 2\pi \times 4.24\text{ kHz} \times 3\text{ mH}$
$= 79.9\ \Omega$

$$Q = \frac{79.9\ \Omega}{2\ \Omega}$$
$$= 39.9$$

(c)
$$Z_{max} = Q^2 \times R \quad (27)$$
$$= (39.9)^2 \times 2\ \Omega$$
$$= 3.19\text{ k}\Omega$$

(d)
$$BW = \frac{R}{2\pi L} \quad (24)$$
$$= \frac{2\ \Omega}{2\pi \times 3\text{ mH}}$$
$$= 106\text{ Hz}$$

**Poles**
number of *RC* or *LC* sections in a filter

**Constant-*k* Filter**
filter whose capacitive and inductive reactances are equal to a constant value *k*

***m*-Derived Filter**
filter that uses a tuned circuit to provide nearly infinite attenuation at a specific frequency

**Roll-off**
the rate of attenuation in a filter

## Types of *LC* Filters

There is an endless variety of filters in use. At frequencies below 100 kHz, *RC* circuit configurations are used. The bulk and expense of the inductors needed at low frequencies limit their use. As we get above 100 kHz, the size of the required inductors becomes small enough so that *LC* combinations are used. Many filters use more than one *RC* or *LC* section to achieve the desired filtering. The number of *RC* or *LC* sections in a filter is referred to as the number of **poles** in the filter.

The two basic types of *LC* filters are the constant-*k* and the *m*-derived filters. The **constant-*k* filters** have the capacitive and inductive reactances made equal to a constant value *k*. The ***m*-derived filters** use a tuned circuit in the filter to provide nearly infinite attenuation at a specific frequency. The rate of attenuation is the steepness of the filter's response curve and is sometimes referred to as the **roll-off.**

It depends on the ratio of the filter's cutoff frequency to the frequency of near infinite attenuation—the *m* of the *m*-derived filter.

*LC* filters of the constant-*k* or *m*-derived types are further defined by the names of four persons who developed and first analyzed various *LC* configurations:

1. Butterworth
2. Chebyshev
3. Cauer (often referred to as elliptical)
4. Bessel (also called Thomson)

The study and design of *LC* filters is a large body of knowledge, the subject of many textbooks dedicated to filter design. Numerous software packages are also available to aid in their design and analysis.

## High-Frequency Effects

At the very high frequencies encountered in communications, the small capacitance and inductance created by wire leads is a problem. Even the capacitance of the wire windings of an inductor can cause problems. Consider the inductor shown in Figure 19. Notice the capacitance shown between the windings. This is termed **stray capacitance.** At low frequencies it has a negligible effect, but at high frequencies capacitance no longer appears as an open circuit and starts affecting circuit performance. The inductor is now functioning like a complex *RLC* circuit.

**Stray Capacitance**
undesired capacitance between two points in a circuit or device

A simple wire exhibits a small amount of inductance. The longer the wire, the greater the inductance. At low frequencies this small inductance (usually a few nanohenries) looks like a short circuit and has no effect. At radio frequencies, however, this can be a problem because the unwanted inductive reactance goes up in value directly as the frequency goes up. Similarly, the stray capacitance between two wires becomes a problem as frequency goes up because it no longer looks like an open circuit. For these reasons it is important to minimize all lead lengths in RF circuits. The use of surface-mount components that have almost no leads except metallic end pieces to solder to the printed circuit board are very effective in minimizing high-frequency problems.

The high-frequency effects just discussed for inductors and capacitors also cause problems with resistors. In fact, at high frequencies the equivalent circuit for a resistor is the same as for an inductor. This is shown in Figure 20.

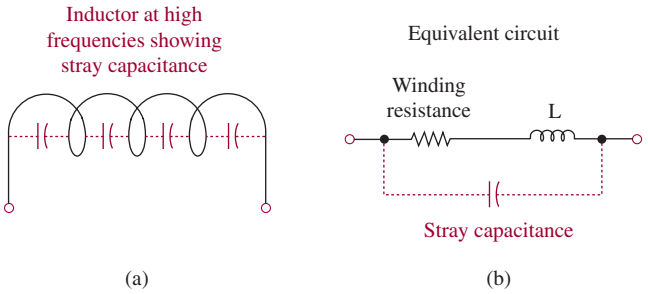


FIGURE 19 Inductor at high frequencies.

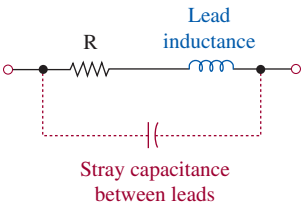


FIGURE 20 Resistor at high frequencies.



# 8 OSCILLATORS

**Oscillator**
circuit capable of converting electrical energy from dc to ac

The most basic building block in a communication system is an **oscillator.** An oscillator is a circuit capable of converting energy from a dc form to ac. In other words, an oscillator generates a waveform. The waveform can be of any type but occurs at some repetitive frequency.

A number of different forms of sine-wave oscillators are available for use in electronic circuits. The choice of an oscillator type is based on the following criteria:

1. Output frequency required.
2. Frequency stability required.
3. Is the frequency to be variable, and if so, over what range?
4. Allowable waveform distortion.
5. Power output required.

These performance considerations, combined with economic factors, will dictate the form of oscillator to be used in a given application.

## *LC* Oscillator

The effect of charging the capacitor in Figure 21(a) to some voltage potential and then closing the switch results in the waveform shown in Figure 21(b). The switch closure starts a current flow as the capacitor begins to discharge through the inductor. The inductor, which resists a change in current flow, causes a gradual sinusoidal current buildup that reaches maximum when the capacitor is fully discharged. At this point the potential energy is zero, but since current flow is maximum, the magnetic field energy around the inductor is maximum. The magnetic field no longer maintained by capacitor voltage then starts to collapse, and its counter EMF will keep current flowing in the same direction, thus charging the capacitor to the opposite polarity of its original charge. This repetitive exchange of energy is known as the **flywheel effect.** The circuit losses (mainly the dc winding resistance of the coil) cause the output to become gradually smaller as this process repeats itself after the complete collapse of the magnetic field. The resulting waveform, shown in Figure 21(b), is termed a **damped** sine wave. The energy of the magnetic field has been converted into the energy of the capacitor's

**Flywheel Effect**
repetitive exchange of energy in an *LC* circuit from the inductor to the capacitor and back

**Damped**
the gradual reduction of a repetitive signal due to resistive losses

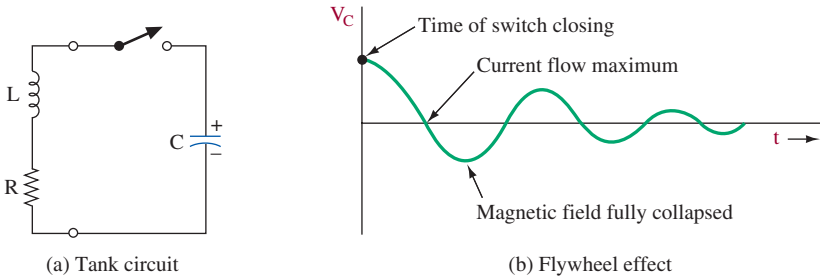


(a) Tank circuit (b) Flywheel effect

FIGURE 21 Tank circuit flywheel effect.

electric field, and vice versa. The process repeats itself at the natural or resonant frequency, $f_r$, as predicted by Equation (23):

$$f_r = \frac{1}{2\pi\sqrt{LC}} \tag{23}$$

For an *LC* tank circuit to function as an oscillator, an amplifier is utilized to restore the lost energy to provide a constant-amplitude sine-wave output. The resulting "undamped" waveform is known as a **continuous wave** (CW) in radio work. The most straightforward method of restoring this lost energy is now examined, and the general conditions required for oscillation are introduced.

**Continuous Wave**
undamped sinusoidal waveform produced by an oscillator in a radio transmitter

The *LC* oscillators are basically feedback amplifiers, with the feedback serving to increase or sustain the self-generated output. This is called positive feedback, and it occurs when the fed-back signal is in phase with (reinforces) the input signal. It would seem, then, that the regenerative effects of this positive feedback would cause the output to increase continually with each cycle of fed-back signal. However, in practice, component nonlinearity and power supply constraints limit the theoretically infinite gain.

The criteria for oscillation are formally stated by the **Barkhausen criteria** as follows:

**Barkhausen Criteria**
two requirements for oscillations: loop gain must be at least unity and loop phase shift must be zero degrees

1. The loop gain must equal 1.
2. The loop phase shift must be $n \times 360°$, where $n = 1, 2, 3, \ldots$.

An oscillating amplifier adjusts itself to meet both of these criteria. The initial surge of dc power or noise in the circuit creates a sinusoidal voltage in the tank circuit at its resonant frequency, and it is fed back to the input and amplified repeatedly until the amplifier works into the saturation and cutoff regions. At this time, the flywheel effect of the tank is effective in maintaining a sinusoidal output. This process shows us that too much gain would cause excessive distortion and therefore the gain should be limited to a level that is just greater than or equal to 1.

## Hartley Oscillator

Figure 22 shows the basic Hartley oscillator in simplified form. The inductors $L_1$ and $L_2$ are a single tapped inductor. Positive feedback is obtained by mutual inductance effects between $L_1$ and $L_2$ with $L_1$ in the transistor output circuit and $L_2$ across the base–emitter circuit. A portion of the amplifier signal in the collector circuit ($L_1$) is returned to the base circuit by means of inductive coupling from $L_1$ to $L_2$. As always in a common-emitter (CE) circuit, the collector and base voltages are 180° out of phase. Another 180° phase reversal between these two voltages occurs because they are taken from opposite ends of an inductor tap that is tied to the common transistor terminal—the emitter. Thus the in-phase feedback requirement is fulfilled and loop gain is of course provided by $Q_1$. The frequency of oscillation is approximately given by

$$f \simeq \frac{1}{2\pi\sqrt{(L_1 + L_2)C}} \tag{28}$$

and is influenced slightly by the transistor parameters and amount of coupling between $L_1$ and $L_2$.

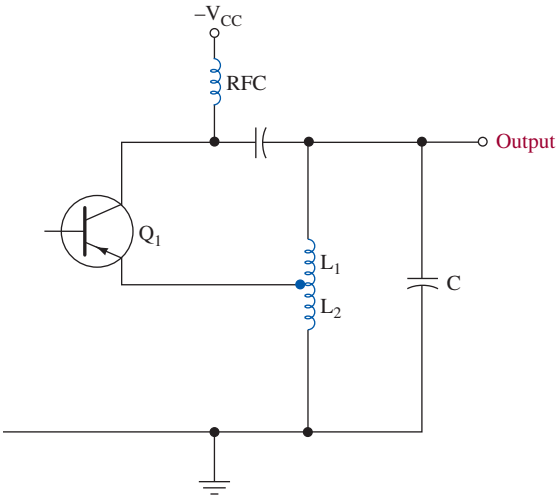


FIGURE 22 Simplified Hartley oscillator.

Figure 23 shows a practical Hartley oscillator. A number of additional circuit elements are necessary to make a workable oscillator over the simplified one used for explanatory purposes in Figure 22. Naturally, the resistors $R_A$ and $R_B$ are for biasing purposes. The radio-frequency choke (RFC) is effectively an open circuit to the resonant frequency and thus allows a path for the bias (dc) current but does not allow the power supply to short out the ac signal. The coupling capacitor $C_3$ prevents dc current from flowing in the tank, and $C_2$ provides dc isolation between the base and the tank circuit. Both $C_2$ and $C_3$ can be considered as short circuits to the oscillator's frequency.

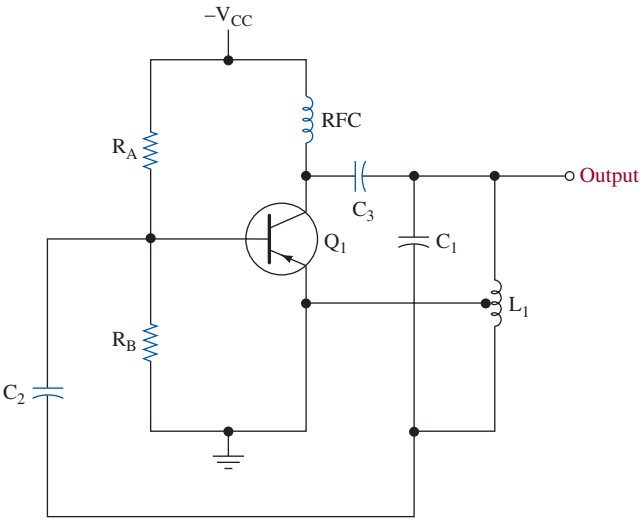


FIGURE 23 Practical Hartley oscillator.

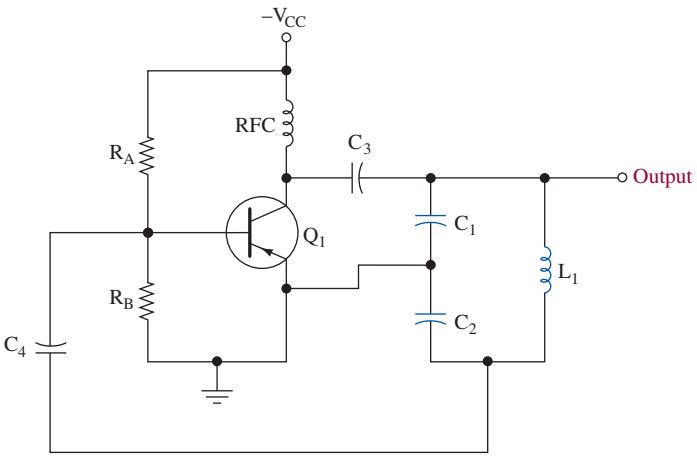


FIGURE 24 Colpitts oscillator.

## Colpitts Oscillator

Figure 24 shows a Colpitts oscillator. It is similar to the Hartley oscillator except that the tank circuit elements have interchanged their roles. The capacitor is now split, so to speak, and the inductor is single-valued with no tap. The details of circuit operation are identical with the Hartley oscillator and therefore will not be explained further. The frequency of oscillation is given approximately by the resonant frequency of $L_1$ and $C_1$ in series with the $C_2$ tank circuit:

$$f \simeq \frac{1}{2\pi\sqrt{[C_1C_2/(C_1 + C_2)]L_1}} \tag{29}$$

The performance differences between these two oscillators' forms are minor, and the choice between them is usually made on the basis of convenience or economics. They may both provide variable oscillator output frequencies by making one of the tank circuit elements variable.

## Clapp Oscillator

A variation of the Colpitts oscillator is shown in Figure 25. The Clapp oscillator has a capacitor $C_3$ in series with the tank circuit inductor. If $C_1$ and $C_2$ are made large enough, they will "swamp" out the transistor's inherent junction capacitances, thereby negating transistor variations and junction capacitance changes with temperature. The frequency of oscillation is

$$f = \frac{1}{2\pi\sqrt{L_1C_3}} \tag{30}$$

and an oscillator with better frequency stability than the Hartley or Colpitts versions results. The Clapp oscillator does not have as much frequency adjustment range, however.

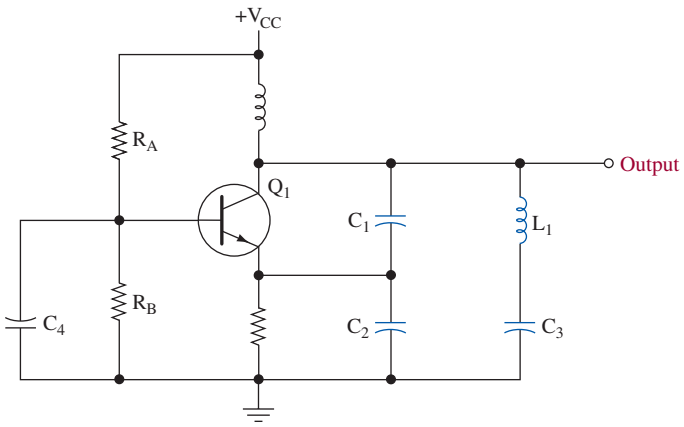


FIGURE 25 Clapp oscillator.

The *LC* oscillators presented in this section are the ones most commonly used. However, many different forms and variations exist and are used for special applications.

## Crystal Oscillator

When greater frequency stability than that provided by *LC* oscillators is required, a crystal-controlled oscillator is often utilized. A crystal oscillator is one that uses a piezoelectric crystal as the inductive element of an *LC* circuit. The crystal, usually quartz, also has a resonant frequency of its own, but optimum performance is obtained when it is coupled with an external capacitance.

The electrical equivalent circuit of a crystal is shown in Figure 26. It represents the crystal by a series resonant circuit (with resistive losses) in parallel with a capacitance $C_p$. The resonant frequencies of these two resonant circuits (series and parallel) are quite close together (within 1%) and hence the impedance of the crystal varies sharply within a narrow frequency range. This is equivalent to a very high $Q$ circuit, and in fact crystals with a $Q$-factor of 20,000 are common; a $Q$ of up to $10^6$ is possible. This compares to a maximum $Q$ of about 1000 with high-quality *LC* resonant circuits. For this reason, and because of the good time and temperature stability characteristics of quartz, crystals are capable of maintaining a frequency to $\pm 0.001\%$ over a fairly wide temperature range. The $\pm 0.001\%$ term is equivalent to saying $\pm 10$ parts per million (ppm), and this is a preferred way of expressing such very small percentages. Note that $0.001\% = 0.00001 = 1/100{,}000 = 10/1{,}000{,}000 = 10$ ppm. Over very narrow temperature ranges or by maintaining the crystal in a small temperature-controlled oven, stabilities of $\pm 0.01$ ppm are possible.

Crystals are fabricated by "cutting" the crude quartz in a very exacting fashion. The method of "cut" is a science in itself and determines the crystal's natural resonant frequency as well as its temperature characteristics. Crystals are available at frequencies of about 15 kHz and up, with higher frequencies providing the best frequency stability. However, at frequencies above 100 MHz, they become so small that handling is a problem.

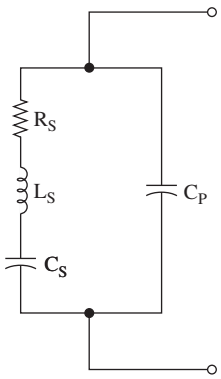


FIGURE 26 Electrical equivalent circuit of a crystal.

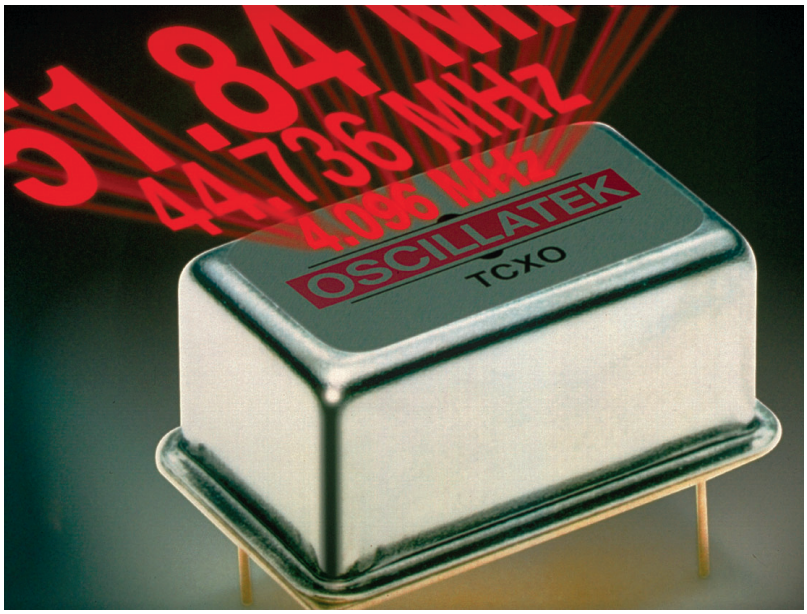


Crystal oscillator. (Courtesy of Oscillatek/John Mutrix.)

Crystals may be used in place of the inductors in any of the *LC* oscillators discussed previously. A circuit especially adapted for crystal oscillators is the Pierce oscillator, shown in Figure 27. The use of an FET is desirable because its high impedance results in light loading of the crystal, provides for good stability, and does not lower the *Q*. This circuit is essentially a Colpitts oscillator with the crystal replacing the inductor and the inherent FET junction capacitances functioning as the split capacitor. Because these junction capacitances are generally low, this oscillator is effective only at high frequencies.

The HA7210 IC can easily be used to build a crystal oscillator. It uses the Pierce oscillator circuitry just discussed with the crystal connected between pins 2 and 3. This is shown in Figure 28, where a 1-MHz crystal oscillator with both

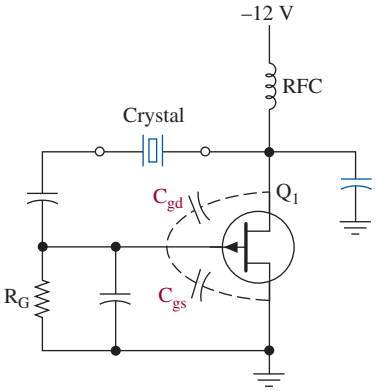


FIGURE 27 Pierce oscillator.

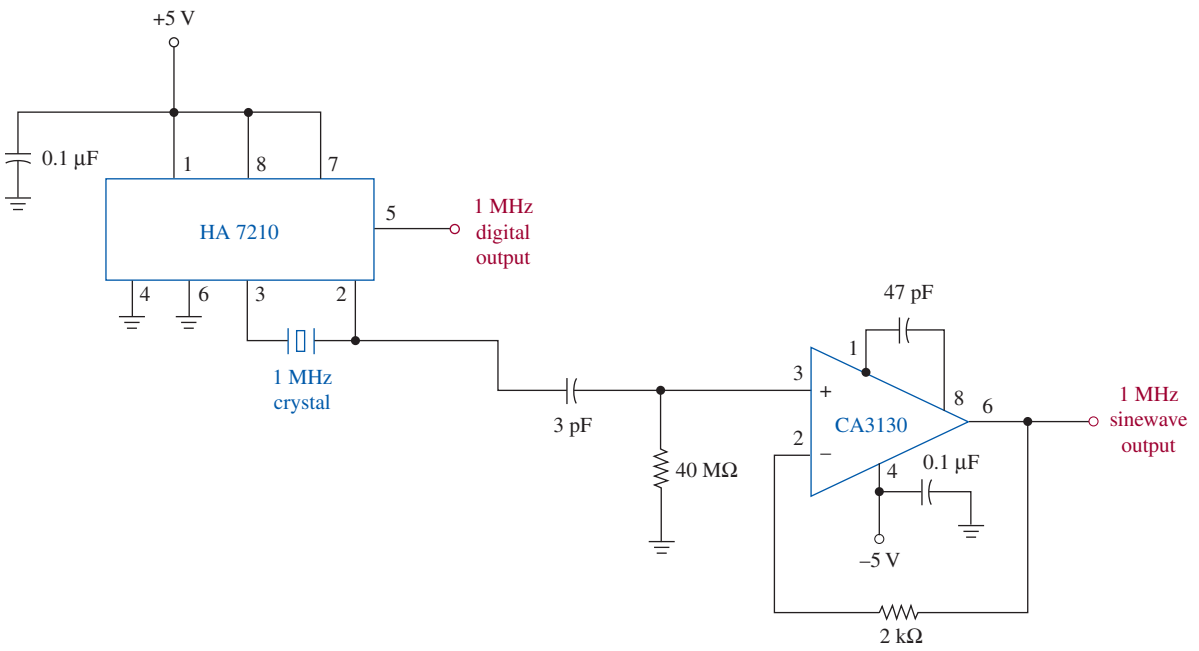


FIGURE 28 IC crystal oscillator.

digital and sine-wave outputs are provided. The CA3130 IC is a high-input impedance amplifier that prevents loading down the signal at pin 2 of the HA7210. If just a digital clock signal is required, the CA3130 and its related circuitry are not necessary.

**Frequency Synthesizer** oscillator that generates a wide range of output frequencies using one reference crystal oscillator

A **frequency synthesizer** generates a wide range of frequencies using a single-crystal oscillator as a basic reference. The various output frequencies have the same accuracy and stability as the crystal oscillator.

Crystal oscillators are available in various forms depending on the frequency stability required. The basic oscillator shown in Figure 27 (often referred to as CXO) may be adequate as a simple clock for a digital system. Increased performance can be attained by adding temperature compensation circuitry (TCXO). Further improvement is afforded by including microprocessor (digital) control in the crystal oscillator package (DTCXO). The ultimate performance is attained with oven control of the crystal's temperature and sometimes also includes the microprocessor control (OCXO). These obviously require significant power to maintain the oven at some constant elevated temperature. A comparison of the four types of commonly available crystal oscillators is provided in Table 5.

## Crystal Test

Crystal oscillators may fail to operate because of faulty design or failed crystals. The circuit shown in Figure 29 works well as a tester for a wide variety of crystals and ceramic resonators over the 40-kHz to 20-MHz range.

**Table 5** Typical Performance Comparison for Crystal Oscillators

| | Basic Crystal Oscillator (CXO) | Temperature Compensated (TCXO) | Digital TCXO (DTCXO) | Oven-Controlled CXO (OCXO) |
|---|---|---|---|---|
| Frequency stability from 0 to 70°C | 100 ppm | 1 ppm | 0.5 ppm | 0.05 ppm |
| Frequency stability for one year at constant temperature | 1 ppm | 1 ppm | 1 ppm | 1 ppm |

The oscillator in Figure 29 is a Pierce type that operates at the crystal's parallel resonant frequency and presents about 30 pF capacitance to the crystal. The CD4007A contains three pairs of complementary MOSFETs with the first (input at pin 6) functioning as the Pierce oscillator. The second (input at pin 3) drives a 200–500-$\mu$A meter movement. The resistor $R$ is selected to provide about 90% deflection with an active (good) crystal. The "tuning" meter from a discarded stereo is usually ideal for this application. The other complementary pair (input at pin 10) provides a low-impedance output that can drive a frequency counter or provide a connection for an oscilloscope.

The crystal being tested can be inserted in the crystal holder or connected with alligator clips. The input MOSFETs are well protected from electrostatic and leakage damage.

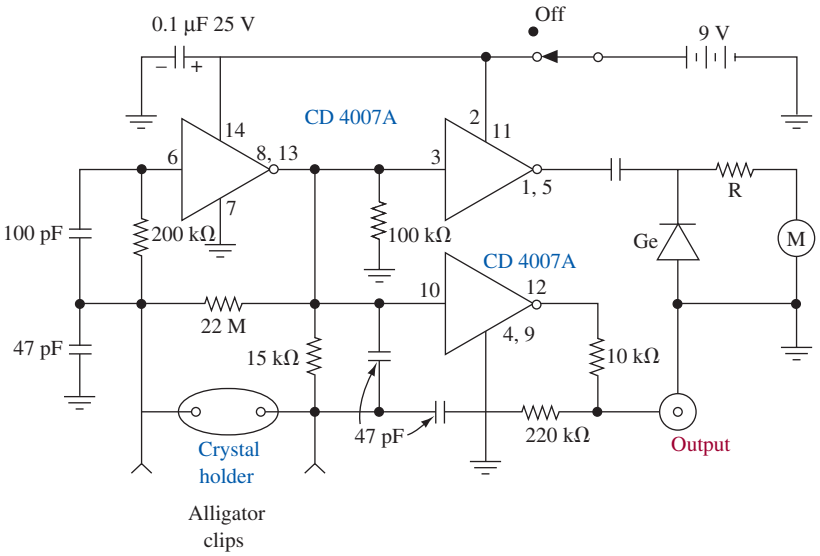


FIGURE 29 Crystal test circuit.



# 9 Troubleshooting

Because of the increasing complexity of electronic communications equipment, you must have a good understanding of communication circuits and concepts. To be an effective troubleshooter, you must also be able to isolate faulty components quickly and repair the defective circuit. Recognizing the way a circuit may malfunction is a key factor in speedy repair procedures.

After completing this section you should be able to

- Explain general troubleshooting techniques
- Recognize major types of circuit failures
- List the four troubleshooting techniques
- Test for a defective crystal
- Test for defective capacitors and inductors
- Understand digital sampling oscilloscope waveforms

## General Troubleshooting Techniques

Troubleshooting requires asking questions such as: What could cause this to happen? Why is this voltage so low/high? Or, if this resistance were open/shorted, what effect would it have on the operation of the circuit I'm working on? Each question calls for measurements to be made and tests to be performed. The defective component(s) is isolated when measurements give results far different than they would be in a properly operating unit, or when a test fails. The ability to ask the right questions makes a good troubleshooter. Obviously, the more you know about the circuit or system being worked on, the quicker the problem will be corrected.

Always start troubleshooting by doing the easy things first:

- Be sure the unit is plugged in and turned on.
- Check fuses.
- Check if all connections are made.
- Ask yourself, "Am I forgetting something?"

Basic troubleshooting test equipment includes:

- a digital multimeter (DMM) capable of reading at the frequencies you intend to work at.
- a broadband oscilloscope, preferably dual trace.
- signal generators, both audio and RF. The RF generator should have internal modulation capabilities.
- a collection of probes and clip leads.

Advanced test equipment would include a spectrum analyzer to observe frequency spectra and a logic analyzer for digital work. Time spent learning your test equipment, its capabilities and limitations, and how to use it will pay off with faster troubleshooting.

Always be aware of any possible effects the test equipment you connect to a circuit may have on the operation of that circuit. Don't let the measuring equipment change what you are measuring. For example, a scope's test lead may have a capacitance of several hundred picofarads. Should that lead be connected across the output of an oscillator, the oscillator's frequency could be changed to the point that any measurements are worthless.

If the equipment you're troubleshooting employs dangerous voltages, do not work alone. Turn off all power switches before entering equipment.

Keep all manuals that came with the equipment. Such manuals usually include troubleshooting procedures. Check them before trying any other approaches.

Maintain clear, up-to-date records of all changes made to equipment.

Replace a suspicious unit with a known good one—this is one of the best, most commonly used troubleshooting techniques.

Test points are often built into electronic equipment. They provide convenient connections to the circuitry for adjustment and/or testing. There are various types, from jacks or sockets to short, stubby wires sticking up from PC boards. Equipment manuals will diagram the location of each test point and describe and sometimes illustrate the condition and/or signal that should be found there. The better manuals indicate the proper test equipment to use.

Plot a game plan or strategy with which you will troubleshoot a problem (just as you might with a car problem).

Use all your senses when troubleshooting:

*Look*—discolored or charred components might indicate overheating.

*Smell*—some components, especially transformers, emit characteristic odors when overheated.

*Feel*—for hot components. Wiggle components to find broken connections.

*Listen*—for "frying" noises that indicate a component is about to fail.

## Reasons Electronic Circuits Fail

Electronic circuits fail in many ways. Let's look at some major types of failures that you will encounter.

**1. Complete Failures** Complete failures cause the piece of equipment to go totally dead. Equipment with some circuits still operating has not completely failed. Normally this type of failure is the result of a major circuit path becoming open. Blown (open) fuses, open power resistors, defective power supply rails, and bad regulator transistors in the power supply can cause complete failures. Complete failures are often the easiest problems to repair.

**2. Intermittent Faults** Intermittent faults are characterized by sporadic circuit operation. The circuit works for awhile and then quits working. It works one moment and doesn't work the next. Keeping the circuit in a failed condition can be quite difficult. Loose wires and components, poor soldering, and effects of temperature on sensitive components can all contribute to intermittent operation in a piece of communications equipment. Intermittent faults are usually the most difficult to repair since troubleshooting can be done only when the equipment is malfunctioning.

**3. Poor System Performance** Equipment that is functioning below specified operational standards is said to have poor system performance characteristics. For example, a transmitter is showing poor performance if the specifications call for 4 W of output power but it is putting out only 2 W. Degradation of equipment performance takes place over a period of time due to deteriorating components (components change in value), poor alignments, and weakening power components.

Regular performance checks are necessary for critical communications systems. Commercial radio transmitters require performance checks to be done on a regular basis.

4. Induced Failures Induced failures often come from equipment abuse. Unauthorized modifications may have been performed on the equipment. An inexperienced technician without supervision may have attempted repairs and damaged the equipment. Induced failures can be eliminated by exercising proper equipment care. Repairs should be done or supervised by experienced technicians.

## Troubleshooting Plan

Experienced technicians have developed a method for troubleshooting. They follow certain logical steps when looking for a defect in a piece of equipment. The following four troubleshooting techniques are popular and widely used to find defects in communications equipment.

1. Symptoms as Clues to Faulty Stages This technique relates a particular fault to a circuit function in the electronic equipment. For example, if a white horizontal line were displayed on the screen of a TV brought in for repair, the service technician would associate this symptom with the vertical output section. Troubleshooting would begin in that section of the TV. As you gain experience in troubleshooting you will start associating symptoms with specific circuit functions.

2. Signal Tracing and Signal Injection Signal injection is supplying a test signal at the input of a circuit and looking for the test signal at the circuit's output or listening for an audible tone at the speaker (Figure 30). This test signal is usually composed of an RF signal modulated with an audible frequency. If the signal is good at the circuit's output, then move to the next stage down the line and repeat the test. Signal tracing, as illustrated in Figure 31, is actually checking for the normal output signal from a stage. An oscilloscope is used to check for these signals. However, other test equipment is available that can be used to detect the presence of output signals. Signal tracing is monitoring the output of a stage for the presence of the expected signal. If the signal is there, then the next stage in line is checked. The malfunctioning stage precedes the point where the output signal is missing.

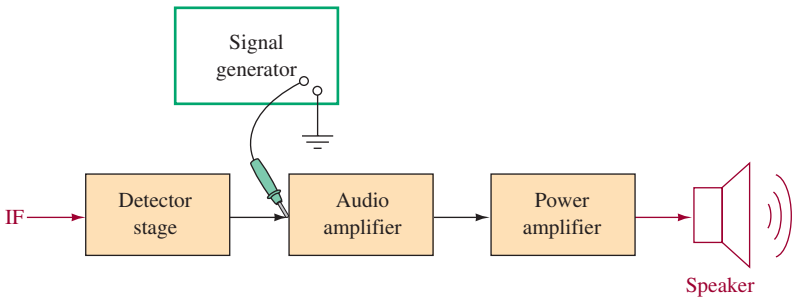


FIGURE 30 Signal injection.

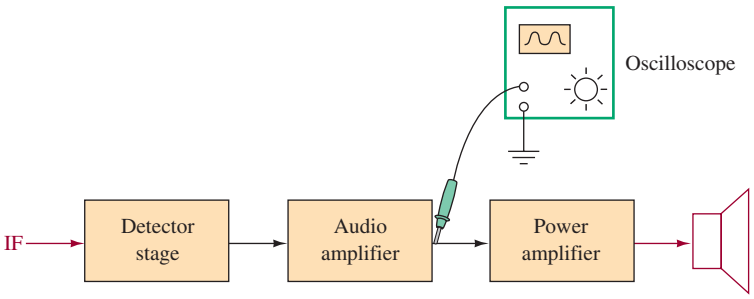


FIGURE 31 Signal tracing.

**3. Voltage and Resistance Measurements** Voltage and resistance measurements are made with respect to chassis ground. Using the DMM (digital multimeter), measurements at specific points in the circuit are compared to those found in the equipment's service manual. Service manuals furnish equipment voltage and resistance charts or print the values right on the schematic diagram. Voltage and resistance checks are done to isolate defective components once the trouble has been pinpointed to a specific stage of the equipment. Remember that resistance measurements are done on circuits with the power turned off.

**4. Substitution** Another method often used to troubleshoot electronic circuits is to swap a known good component for the suspected bad component. A warning is in order here: The good component could get damaged in the substitution process. Don't get into the habit of indiscriminately substituting parts. This method works best when you have narrowed the failure down to a specific component.

## Testing a Crystal

An oscillator with a bad crystal may not oscillate at all, may be erratic, or may not oscillate at the correct frequency. One common crystal failure mode is a broken or corroded internal connection. Or if the crystal has been dropped, it may be cracked.

Figure 32 shows how to make a simple test to determine quickly the condition of the crystal. Normally, a crystal oscillator will oscillate at a slightly higher frequency than the crystal's series resonant point. If you can find the series resonant point of the crystal, you know the crystal is good.

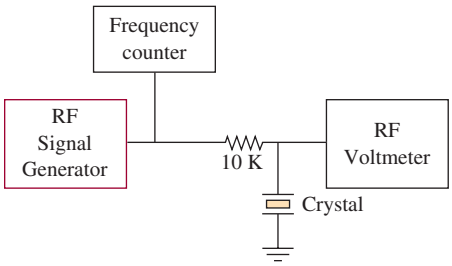


FIGURE 32 Crystal test.

Recall that at the series resonant point, the crystal should have a very low resistance, on the order of 100 Ω. At other frequencies, the crystal impedance should be quite high.

The generator should be very carefully tuned across the specified frequency of the crystal. If the crystal is operating properly, the voltmeter will show a dramatic dip at the series resonant point. Remember that the crystal is a very high $Q$ device, and tuning the signal generator will have to be done carefully.

Because the impedance of the crystal is extremely high at the parallel or antiresonant point, perhaps 50,000 Ω, there should be a peak on the voltmeter at a frequency just slightly above the series resonant point. You should look for the series resonant point first because it is easier to find.

The voltage across a broken crystal will not change much as the generator frequency is varied. Internal connection problems could cause erratic operation. Corrosion problems will cause the resonant frequency to shift from the specified value.

## Testing Oscillator Capacitors

The capacitors associated with the crystal or inductor together with the inductor determine the exact frequency of oscillation. This type of capacitor will seldom show a short, but it can become sensitive to temperature and shock or change value with age.

In the Clapp circuit shown in Figure 33, $C_3$ is primarily responsible for setting the frequency. While observing the frequency with a counter, cool the capacitor with an aerosol spray sold for cooling electronic equipment. Defective capacitors will generally change value suddenly and shift the frequency a good bit when cooled. If $C_3$ is open, the circuit probably will not oscillate at all.

In the Clapp circuit, $C_1$ and $C_2$ are primarily responsible for providing the proper amount of feedback to allow oscillation. If either of these capacitors fails, the oscillator will not work. An oscilloscope connected to the collector of $Q_1$ should show a high-quality sine wave. $C_1$ and $C_2$ do have some effect on the frequency and should not be excluded from suspicion if the frequency is not correct.

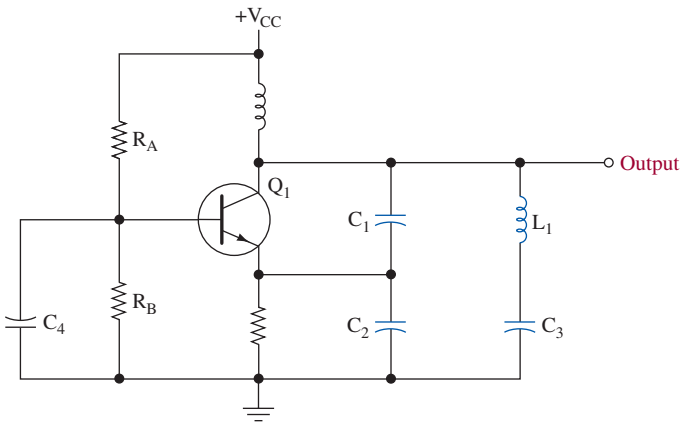


FIGURE 33 Clapp oscillator.

## Testing Oscillator Inductors

A shorted or open inductor will completely kill an oscillator. Inductors can be easily checked for an open circuit with an ohmmeter, though the ohmmeter will not detect a shorted turn. A short in the inductor is best detected with a *Q*-meter or impedance bridge.

## Understanding Digital Sampling Oscilloscope Waveforms

The waveforms created by the improper setup of the sampling frequency of a digital sampling oscilloscope (DSO) can lead to strange waveforms, confusion, and errors. The minimum sample frequency of the DSO must be set to at least twice the maximum input frequency. This is called the Nyquist sampling frequency. If the sample frequency is too low, then the resulting waveform will be greatly distorted and will not truly reflect the waveform being measured. Additionally, the frequency information generated by the FFT of the input signal will not be accurate. In fact, the FFT will indicate a frequency that does not occur in the measured signal.

For example, a 12.375-kHz sinusoid was input into channel 1 of a DSO. The sample frequency of the DSO was set to 10 kS/s. The minimum sample frequency should have been at least 24.75 kS/s to meet the Nyquist sample frequency criteria. Figure 34 shows the resulting time series and its FFT. Notice the extreme distortion of the time series. The input signal is a sinusoid, but the picture appears to contain amplitude variations and possibly more than one frequency. The FFT indicates that a 2.375-kHz signal is being sampled, which is not correct. The 2.375-kHz signal, generated by the selection of an improper sampling frequency, results from the 10-kHz

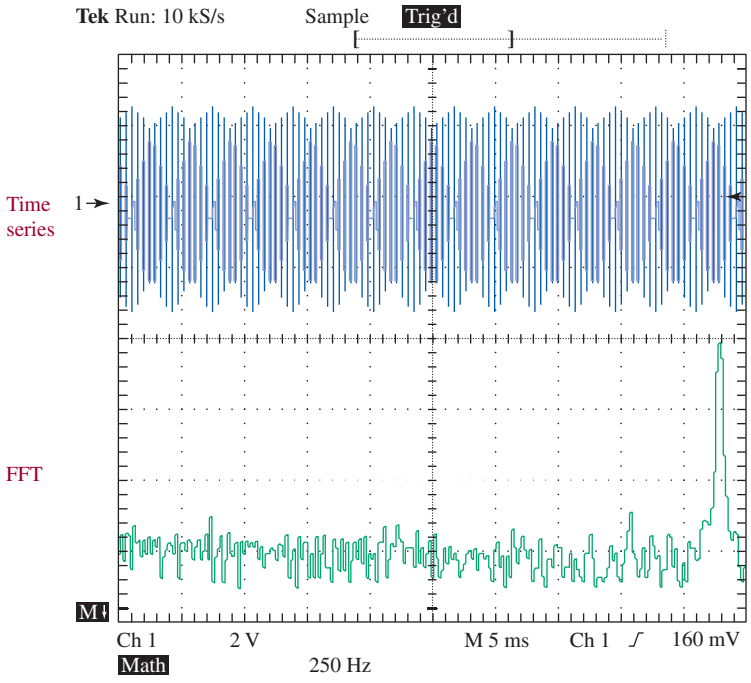


FIGURE 34 The time series (top) and the FFT (bottom) for a 12.375-kHz sinusoid with the sample rate set to 10 kS/s.

sampling frequency "mixing" with the 12.375-kHz sinusoid and the frequency difference of 2.375 kHz (12.375 kHz − 10 kHz) being generated. Basically, when two frequencies are "mixing" together, as in the case of sampling a 12.375-kHz sinusoid with a 10-kS/s sample frequency, two frequencies are generated, the sum of 10 kHz + 12.375 kHz, or 22.375 kHz, and a difference frequency of 12.375 kHz − 10 kHz, or 2.375 kHz. The FFT shows that a 2.375-kHz frequency (difference) was generated, which is the difference frequency. A 22.375-kHz frequency was also generated but is not shown on this display. Knowing that both a 2.375-kHz and a 22.375-kHz signal were generated helps to explain the complex-looking waveform and why the time series waveform appears to contain two frequency components.



# 10 Troubleshooting with Electronics Workbench™ Multisim

This chapter presents computer simulation examples of troubleshooting and analyzing electronic communications circuits and concepts using Electronics Workbench Multisim. Electronics Workbench provides a unique opportunity for you to examine electronic circuits and concepts in a way that reflects techniques used for analyzing and troubleshooting circuits and systems in practice. The use of Electronics Workbench provides you with additional hands-on insight into many of the fundamental communication circuits, concepts, and test equipment while improving your ability to perform logical thinking when troubleshooting circuits and systems. The test equipment tools available in Electronics Workbench reflect the type of tools that are commonly available on well-equipped test benches.

An introduction to many fundamental concepts in communications was presented in this chapter. The topics included the dB, noise, oscillators, *LC* circuits, and frequency spectra. The Electronics Workbench example reinforces the concepts presented in the section on understanding the frequency spectra. This particular example demonstrates that a complex waveform such as a square wave generates multifrequency components called harmonics. A spectrum analyzer is used in Electronics Workbench to observe and analyze the spectral content of a square wave.

To begin this exercise, start Electronics Workbench Multisim and open the file called **Fig1-35** that is found at www.pearsoned.com/electronics. It is a simple circuit containing a 1 kHz square-wave generator connected to a 1 kΩ resistive load. The circuit is shown in Figure 35.

Begin the simulation by clicking on the **start simulation** button. Verify that the function generator is outputting a 5-V square wave at 1 kHz by viewing the trace with the oscilloscope. The oscilloscope display can be opened by double-clicking on the oscilloscope icon. The oscilloscope display is shown in Figure 36.

Next, double-click on the spectrum analyzer. In a few seconds, the spectrum analyzer will sample and build the image shown in Figure 37. Each spike in the waveform shows a frequency component or harmonic of the square wave. The concept of a square wave containing multiple frequency components was presented in Section 6. An oscilloscope image of a kHz square wave and its corresponding FFT spectrum were presented in Figure 12.

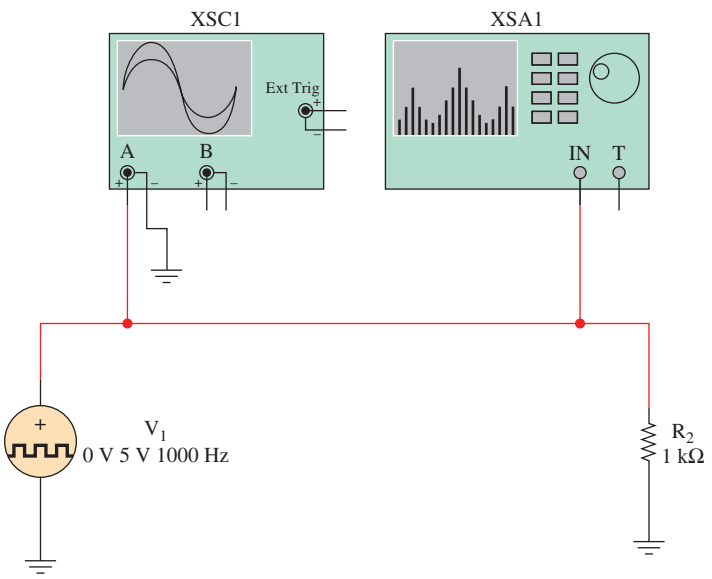


FIGURE 35 The Multisim component view of the test circuit used to demonstrate the frequency spectra for a square wave.

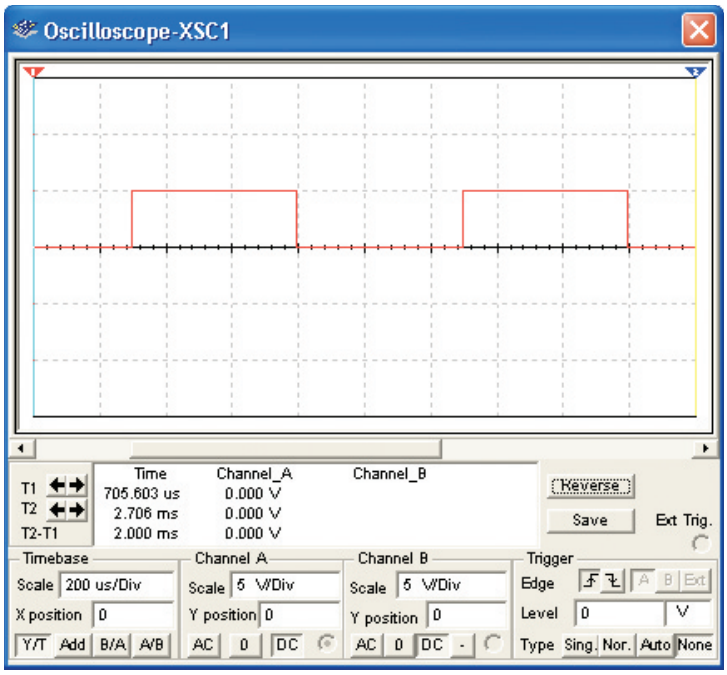


FIGURE 36 The Multisim oscilloscope image of the square wave from the function generator.

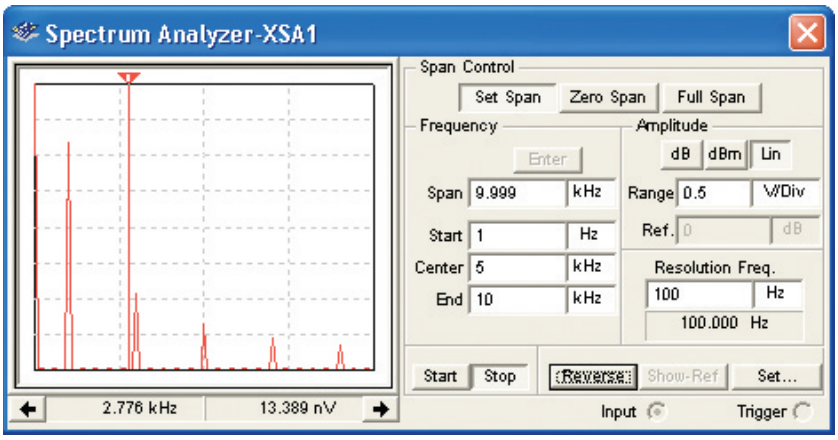


FIGURE 37 The Multisim spectrum analyzer view of a 1-kHz square wave.

The spectrum analyzer provides a cursor that can be positioned to measure the frequency of each component. In this case, the cursor has been positioned next to the 3-kHz spike, which is the third harmonic of a 1-kHz square wave. The spectrum analyzer provides settings for the frequency span, start, center, and end frequencies. These adjustments provide the user with the capability of selecting the frequency range for conducting a measurement. Additional experiments are presented in the text that demonstrate additional features of the Electronics Workbench tools. Three exercises requiring the use of Electronics Workbench™ Multisim are provided below.

## Electronics Workbench™ Exercises

1. Use the cursor on the spectrum analyzer to identify the seventh and ninth harmonics for the circuit provided in **Fig1-35.**
2. The circuit provided in **FigE1-1** at www.pearsoned.com/electronics can be used to demonstrate the effect a bandlimited channel has on the spectral content of a square wave. Discuss the observed changes in the circuit as compared to the circuit provided in **Fig1-35.**
3. The circuit provided in **FigE1-2** at www.pearsoned.com/electronics contains a 100-kHz square wave. Change the settings on the spectrum analyzer so that the first, third, fifth, seventh, and ninth harmonics are displayed on the screen. The solution is provided on your EWB **FigE1-2-solution.**



## Summary

This chapter introduces the concept of a communication system. Decibels and the effects of electrical noise were explained, and *LC* circuits and oscillators were discussed. The major topics you should now understand include:

- the use of the decibel in communications
- the function and basic building blocks of a communication system

- the need for modulation/demodulation in a communications system
- the difference between the carrier wave and intelligence wave and their importance
- the effects and analysis of electrical noise in a communications system
- the performance of signal-to-noise ratio and noise figure calculations
- the performance of electrical noise measurements on a communications system
- the makeup of nonsinusoidal waveforms
- the mathematical analysis of waveforms using Fourier analysis
- the analysis of *LC* filters
- the understanding of common oscillator types, including Hartley, Colpitts, Clapp, and crystal varieties



## Questions and Problems

### Section 1

1. Define *modulation.*
*2. What is *carrier frequency*?
3. Describe the two reasons that modulation is used for communications transmissions.
4. List the three parameters of a high-frequency carrier that may be varied by a low-frequency intelligence signal.
5. What are the frequency ranges included in the following frequency subdivisions: MF (medium frequency), HF (high frequency), VHF (very high frequency), UHF (ultra high frequency), and SHF (super high frequency)?

### Section 2

6. A signal level of 0.4 $\mu$V is measured on the input to a satellite receiver. Express this voltage in terms of dB$\mu$V. Assume a 50-$\Omega$ system. ($-7.95$ dB$_\mu$V)
7. A microwave transmitter typically requires a +8-dBm audio level to drive the input fully. If a +10-dBm level is measured, what is the actual voltage level measured? Assume a 600-$\Omega$ system. (2.45 V)
8. If an impedance matched amplifier has a power gain ($P_{out}/P_{in}$) of 15, what is the value for the voltage gain ($V_{out}/V_{in}$)? (3.87)
9. Convert the following powers to their dBm equivalents:
   (a) $p$ = 1 W (30 dBm)
   (b) $p$ = 0.001 W (0 dBm)
   (c) $p$ = 0.0001 W ($-10$ dBm)
   (d) $p$ = 25 $\mu$W ($-16$ dBm)
10. The output power for an audio amplifier is specified to be 38 dBm. Convert this value to (a) watts and (b) dBW. (6.3 W, 8 dBW)
11. A 600-$\Omega$ microphone outputs a $-70$-dBm level. Calculate the equivalent output voltage for the $-70$-dBm level. (0.245 mV)
12. Convert 50-$\mu$V to a dB$\mu$V equivalent. (34 dB$\mu$V)

* An asterisk preceding a number indicates a question that has been provided by the FCC as a study aid for licensing examinations.



13. A 2.15-V rms signal is measured across a 600-Ω load. Convert this measured value to its dBm equivalent. (8.86 dBm (600))
14. A 2.15-V rms signal is measured across a 50-Ω load. Convert this measured value to its dBm(50) equivalent. (19.66 dBm(50))

## Section 3

15. Define *electrical noise*, and explain why it is so troublesome to a communications receiver.
16. Explain the difference between external and internal noise.
17. List and briefly explain the various types of external noise.
18. Provide two other names for Johnson noise and calculate the noise voltage output of a 1-MΩ resistor at 27°C over a 1-MHz frequency range. (128.7 $\mu$V)
19. The noise produced by a resistor is to be amplified by a noiseless amplifier having a voltage gain of 75 and a bandwidth of 100 kHz. A sensitive meter at the output reads 240 $\mu$V rms. Assuming operation at 37°C, calculate the resistor's resistance. If the bandwidth were cut to 25 kHz, determine the expected output meter reading. (5.985 kΩ, 120 $\mu$V)
20. Explain the term *low-noise resistor.*
21. Determine the noise current for the resistor in Problem 18. What happens to this noise current when the temperature increases? (129 pA)
22. The noise spectral density is given by $e_n^2/\Delta f = 4kTR$. Determine the bandwidth $\Delta f$ of a system in which the noise voltage generated by a 20-kΩ resistor is 20 $\mu$V rms at room temperature. (1.25 MHz)

## Section 4

23. Calculate the *S/N* ratio for a receiver output of 4 V signal and 0.48 V noise both as a ratio and in decibel form. (69.44, 18.42 dB)
24. The receiver in Problem 23 has an *S/N* ratio of 110 at its input. Calculate the receiver's noise figure (NF) and noise ratio (NR). (1.998 dB, 1.584)
25. An amplifier with NF = 6 dB has $S_i/N_i$ of 25 dB. Calculate the $S_o/N_o$ in dB and as a ratio. (19 dB, 79.4)
26. A three-stage amplifier has an input stage with noise ratio (NR) = 5 and power gain ($P_G$) = 50. Stages 2 and 3 have NR = 10 and $P_G$ = 1000. Calculate the NF for the overall system. (7.143 dB)
27. A two-stage amplifier has a 3-dB bandwidth of 150 kHz determined by an *LC* circuit at its input and operates at 27°C. The first stage has $P_G$ = 8 dB and NF = 2.4 dB. The second stage has $P_G$ = 40 dB and NF = 6.5 dB. The output is driving a load of 300 Ω. In testing this system, the noise of a 100-kΩ resistor is applied to its input. Calculate the input and output noise voltage and power and the system noise figure. (19.8 $\mu$V, 0.206 mV, $9.75 \times 10^{-16}$ W, $1.4 \times 10^{-10}$ W, 3.6 dB)
28. A microwave antenna ($T_{eq}$ = 25 K) is coupled through a network ($T_{eq}$ = 30 K) to a microwave receiver with $T_{eq}$ = 60 K referred to its output. Calculate the noise power at its input for a 2-MHz bandwidth. Determine the receiver's NF. ($3.17 \times 10^{-15}$ W, 0.817 dB)
29. A high-quality FM receiver is to be tested for SINAD. When its output contains just the noise and distortion components, 0.015 mW is measured. When the desired signal and noise and distortion components are measured together, the output is 15.7 mW. Calculate SINAD. (30.2 dB)
30. Explain SINAD.

## Section 5

31. Calculate the noise power at the input of a microwave receiver with an equivalent noise temperature of 45 K. It is fed from an antenna with a 35 K equivalent noise temperature and operates over a 5-MHz bandwidth. ($5.52 \times 10^{-15}$ W)
32. Calculate the minimum signal power needed for good reception for the receiver described in Problem 31 if the signal-to-noise ratio must be not less than 100 : 1. ($5.52 \times 10^{-13}$ W)
33. Calculate the NF and $T_{eq}$ for an amplifier that has $Z_{in} = 300\ \Omega$. It is found that when driven from a matched-impedance diode noise generator, its output noise is doubled (as compared to no input noise) when the diode is forward biased with 0.3 mA. (2.55 dB, 232 K)
34. Describe the procedure used for noise measurement using the noise diode generator.
35. Describe what is known as a DUT.
36. Describe the procedure for noise measurement using the tangential technique.

## Section 6

37. Define *information theory.*
38. What is Hartley's law? Explain its significance.
39. What is a *harmonic*?
40. What is the seventh harmonic of 360 kHz? (2520 kHz)
41. Why does transmission of a 2-kHz square wave require greater bandwidth than a 2-kHz sine wave?
42. Draw time- *and* frequency-domain sketches for a 2-kHz square wave. The time-domain sketch is a standard oscilloscope display while the frequency domain is provided by a spectrum analyzer.
43. Explain the function of Fourier analysis.
44. A 2-kHz square wave is passed through a filter with a 0- to 10-kHz frequency response. Sketch the resulting signal, and explain why the distortion occurs.
45. A triangle wave of the type shown in Table 4(e) has a peak-to-peak amplitude of 2 V and $f = 1$ kHz. Write the expression $v(t)$, including the first five harmonics. Graphically add the harmonics to show the effects of passing the wave through a low-pass filter with cutoff frequency equal to 6 kHz.
46. The FFT shown in Figure 38 was obtained from a DSO.
    (a) What is the sample frequency?
    (b) What frequency is shown by the FFT?
47. Figure 39 was obtained from a DSO.
    (a) What are the frequencies of the third and fifth harmonics?
    (b) This FFT was created by inputting a 12.5-kHz square wave into a DSO. Explain where 12.5 kHz is located within the FFT spectrum.

## Section 7

48. Explain the makeup of a practical inductor and capacitor. Include the quality and dissipation in your discussion.
49. Define *resonance* and describe its use.
50. Calculate an inductor's $Q$ at 100 MHz. It has an inductance of 6 mH and a series resistance of 1.2 k. Determine its dissipation. ($3.14 \times 10$, $0.318 \times 10^{-3}$)

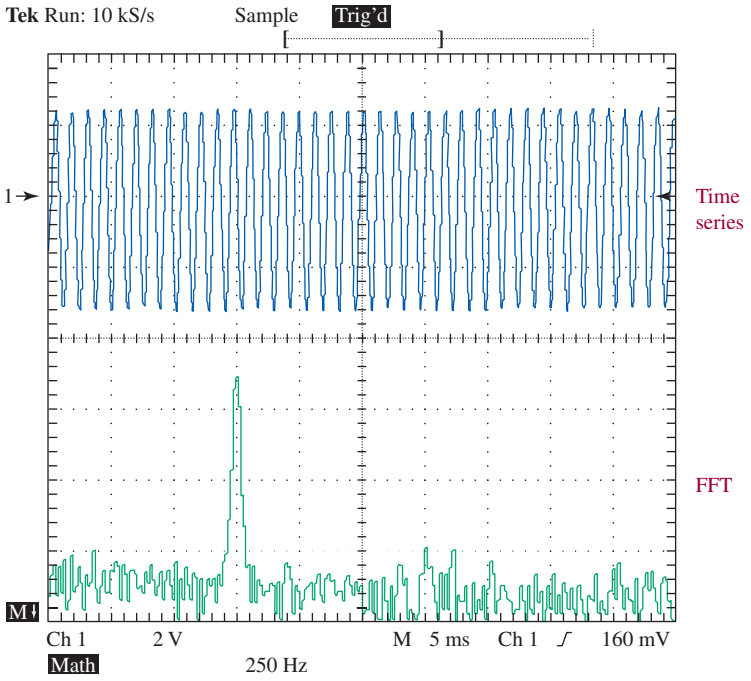


FIGURE 38 FFT for Problem 46.

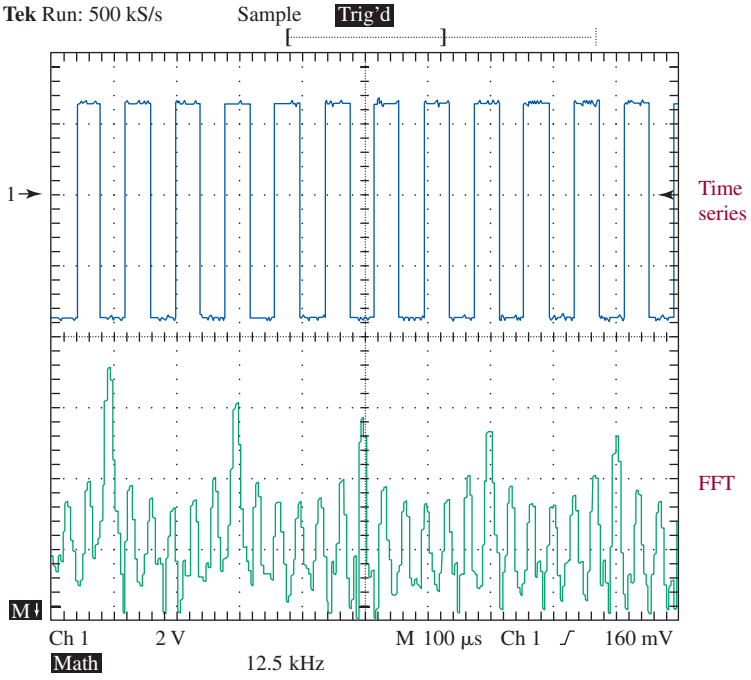


FIGURE 39 FFT for Problem 47.

51. Calculate a capacitor's $Q$ at 100 MHz given 0.001 $\mu$F and a leakage resistance of 0.7 M$\Omega$. Calculate $D$ for the same capacitor. ($4.39 \times 10^5$, $2.27 \times 10^{-6}$)
52. The inductor and capacitor for Problems 50 and 51 are put in series. Calculate the impedance at 100 MHz. Calculate the frequency of resonance ($f_r$) and the impedance at that frequency. (3.77 M$\Omega$, 65 kHz, 1200 $\Omega$)
53. Calculate the output voltage for the circuit shown in Figure 15 at 6 kHz and 4 kHz. Graph these results together with those of Example 12 versus frequency. Use the circuit values given in Example 12.
54. Sketch the $e_{out}/e_{in}$ versus frequency characteristic for an $LC$ bandpass filter. Show $f_{lc}$ and $f_{hc}$ on the sketch and explain how they are defined. On this sketch, show the bandwidth (BW) of the filter and explain how it is defined.
55. Define the quality factor ($Q$) of an $LC$ bandpass filter. Explain how it relates to the "selectivity" of the filter. Describe the major limiting value on the $Q$ of a filter.
56. An FM radio receiver uses an $LC$ bandpass filter with $f_r = 10.7$ MHz and requires a BW of 200 kHz. Calculate the $Q$ for this filter. (53.5)
57. The circuit described in Problem 56 is shown in Figure 18. If $C = 0.1$ nF ($0.1 \times 10^{-9}$ F), calculate the required inductor value and the value of $R$. (2.21 $\mu$H, 2.78 $\Omega$)
58. A parallel $LC$ tank circuit has a $Q$ of 60 and coil winding resistance of 5 $\Omega$. Determine the circuit's impedance at resonance. (18 k$\Omega$)
59. A parallel $LC$ tank circuit has $L = 27$ mH, $C = 0.68$ $\mu$F, and a coil winding resistance of 4 $\Omega$. Calculate $f_r$, $Q$, $Z_{max}$, the BW, $f_{lc}$, and $f_{hc}$. (1175 Hz, 49.8, 9.93 k$\Omega$, 23.6 Hz, 1163 Hz, 1187 Hz)
60. Explain the significance of the $k$ and $m$ in constant-$k$ and $m$-derived filters.
61. Describe the criteria used in choosing either an $RC$ or $LC$ filter.
62. Explain why keeping lead lengths to a minimum is important in RF circuits.
63. Describe a pole.
64. Explain why Butterworth and Chebyshev filters are called constant-$k$ filters.

## Section 8

65. Draw schematics for Hartley and Colpitts oscillators. Briefly explain their operation and differences.
66. Describe the reason that a Clapp oscillator has better frequency stability than the Hartley or Colpitts oscillators.
67. List the major advantages of crystal oscillators over the $LC$ varieties. Draw a schematic for a Pierce oscillator.
68. The crystal oscillator time base for a digital wristwatch yields an accuracy of $\pm$15 s/month. Express this accuracy in parts per million (ppm). ($\pm$5.787 ppm)

## Section 9

69. List and briefly describe the four basic troubleshooting techniques.
70. Describe the disadvantages of using substitution at the early stages of the troubleshooting plan.
71. Explain why resistance measurements are done with power off.
72. Describe the major types of circuit failures.



73. Describe when it is more appropriate to use the signal injection method.
74. What would the output of the Clapp oscillator in Figure 33 look like if C2 was open?
75. In the crystal test setup shown in Figure 32, explain the difference in output at the series and parallel resonant frequencies.

## Questions for Critical Thinking

76. You cannot guarantee perfect performance in a communications system. What two basic limitations explain this?
77. You are working on a single-stage amplifier that has a 200-kHz bandwidth and a voltage gain of 100 at room temperature. The external noise is negligible. A 1-mV signal is applied to the amplifier's input. If the amplifier has a 5-dB NF and the input noise is generated by a 2-kΩ resistor, what output noise voltage would you predict? (458 $\mu$V)
78. How does equivalent noise resistance relate to equivalent noise temperature? Explain similarities and/or differences.
79. Describe a situation in which you would use the Barkhausen criteria for oscillation. How would positive feedback be involved in your use of these criteria?

# AMPLITUDE MODULATION
## TRANSMISSION

From *Modern Electronic Communication*, Ninth Edition, Jeffrey S. Beasley, Gary M. Miller. Copyright © 2008 by Pearson Education, Inc. Published by Prentice Hall. All rights reserved.

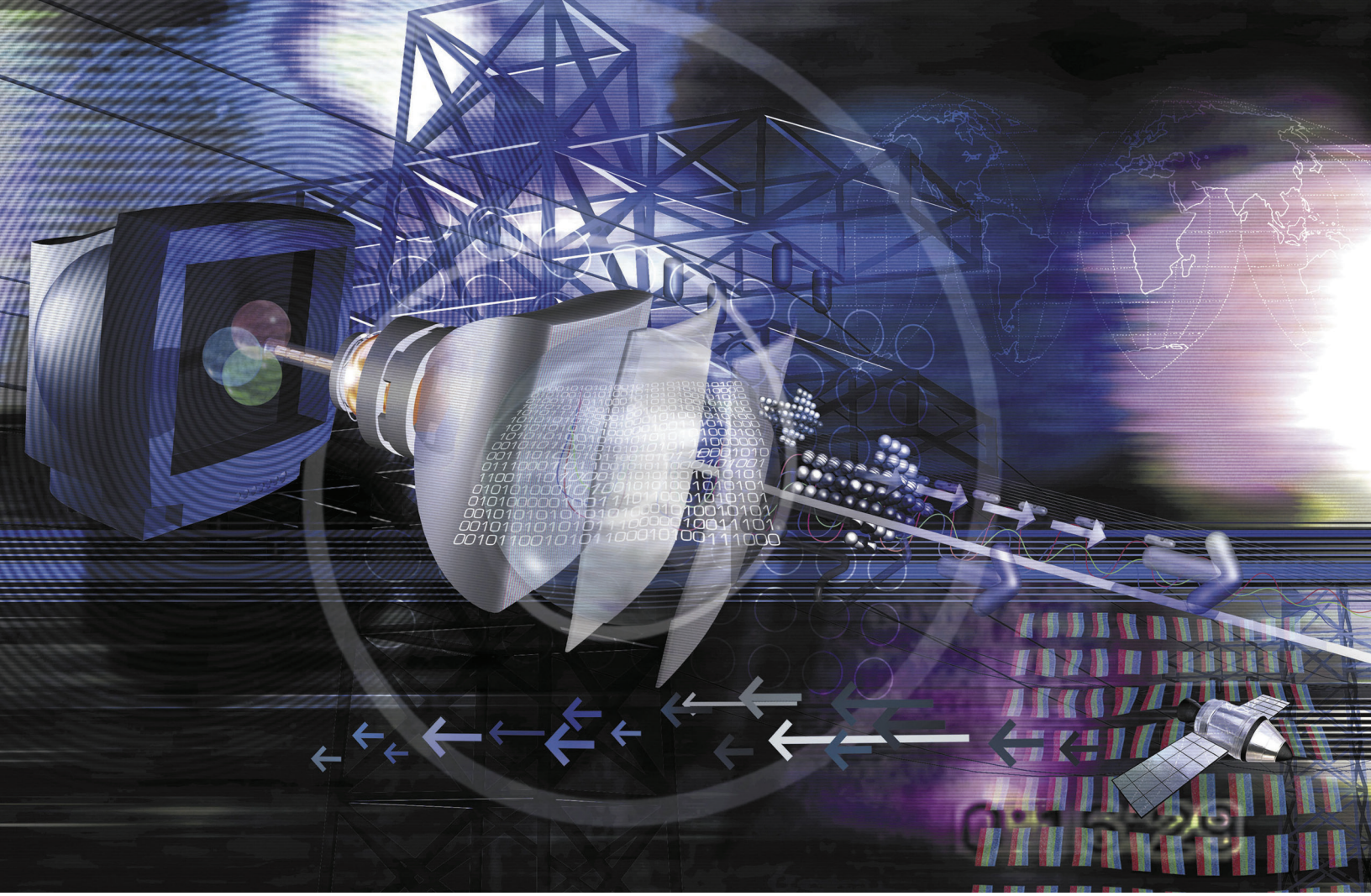

## Chapter Outline

1 Introduction
2 Amplitude Modulation Fundamentals
3 Percentage Modulation
4 AM Analysis
5 Circuits for AM Generation
6 AM Transmitter Systems
7 Transmitter Measurements
8 Troubleshooting
9 Troubleshooting with Electronics Workbench™ Multisim

## Objectives

- Describe the process of modulation
- Sketch an AM waveform with various modulation indexes
- Explain the difference between a sideband and side frequency
- Analyze various power, voltage, and current calculations in AM systems
- Understand circuits used to generate AM
- Determine high- and low-level modulation systems from schematics and block diagrams
- Perform AM transmitter measurements using meters, oscilloscopes, and spectrum analyzers

# AMPLITUDE MODULATION

## TRANSMISSION



A communication tower. (Courtesy of Getty Images)

## Key Terms

modulation
nonlinear device
upper sideband
lower sideband
percentage modulation
modulation index
modulation factor
overmodulation
sideband splatter
base modulation
high-level modulation
low-level modulation
neutralizing capacitor
parasitic oscillations
modulated amplifier
driver amplifier
keying
low excitation
downward modulation
spectrum analyzer
spurious frequencies
spurs
noise floor
relative harmonic distortion
total harmonic distortion
dummy antenna

## 1 INTRODUCTION

The reasons that modulation is used in electronic communications is explained as:

1. Direct transmission of intelligible signals would result in catastrophic interference problems because the resulting radio waves would be at approximately the same frequency.
2. Most intelligible signals occur at relatively low frequencies. Efficient transmission and reception of radio waves at low frequencies is not practical due to the large antennas required.

**Modulation**
impressing a low-frequency intelligence signal onto a higher-frequency carrier signal

The process of impressing a low-frequency intelligence signal onto a higher-frequency "carrier" signal may be defined as **modulation.** The higher-frequency "carrier" signal will hereafter be referred to as simply the carrier. It is also termed the radio-frequency (RF) signal because it is at a high-enough frequency to be transmitted through free space as a radio wave. The low-frequency intelligence signal will subsequently be termed the "intelligence." It may also be identified by terms such as modulating signal, information signal, audio signal, or modulating wave.

Three different characteristics of a carrier can be modified to allow it to "carry" intelligence. Either the amplitude, frequency, or phase of a carrier are altered by the intelligence signal. Varying the carrier's amplitude to accomplish this goal is the subject of this chapter.

## 2 AMPLITUDE MODULATION FUNDAMENTALS

Combining two widely different sine-wave frequencies such as a carrier and intelligence in a linear fashion results in their simple algebraic addition, as shown in Figure 1. A circuit that would perform this function is shown in Figure 1(a)—

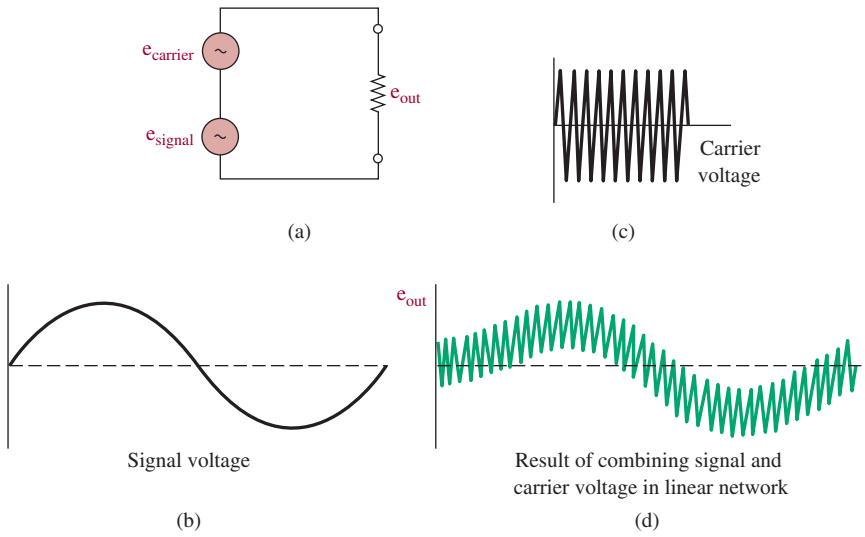


FIGURE 1 Linear addition of two sine waves.

the two signals combined in a linear device such as a resistor. Unfortunately, the result [Figure 1(d)] is *not* suitable for transmission as an AM waveform. If it were transmitted, the receiving antenna would be detecting just the carrier signal because the low-frequency intelligence component cannot be propagated efficiently as a radio wave.

The method utilized to produce a usable AM signal is to combine the carrier and intelligence through a **nonlinear device.** It can be mathematically proven that the combination of any two sine waves through a nonlinear device produces the following frequency components:

**Nonlinear Device**
characterized by a nonlinear output versus input signal relationship

1. A dc level
2. Components at each of the two original frequencies
3. Components at the sum and difference frequencies of the two original frequencies
4. Harmonics of the two original frequencies

Figure 2 shows this process pictorially with the two sine waves, labeled $f_c$ and $f_i$, to represent the carrier and intelligence. If all but the $f_c - f_i$, $f_c$, and $f_c + f_i$ components are removed (perhaps with a bandpass filter), the three components left form an AM waveform. They are referred to as:

1. The *lower-side frequency* ($f_c - f_i$)
2. The *carrier frequency* ($f_c$)
3. The *upper-side frequency* ($f_c + f_i$)

Mathematical analysis of this process is provided in Section 4.

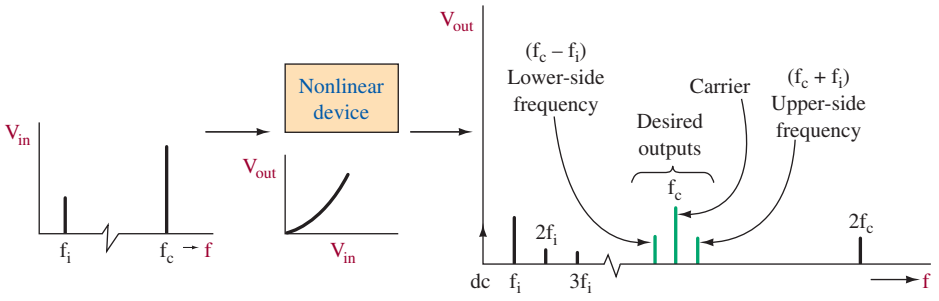


FIGURE 2 Nonlinear mixing.

## AM Waveforms

Figure 3 shows the actual AM waveform under varying conditions of the intelligence signal. Note in Figure 3(a) that the resultant AM waveform is basically a signal at the carrier frequency whose amplitude is changing at the same rate as the intelligence frequency. As the intelligence amplitude reaches a maximum positive value, the AM waveform has a maximum amplitude. The AM waveform reaches a minimum value when the intelligence amplitude is at a maximum negative value. In Figure 3(b), the intelligence frequency remains the same, but its amplitude has been increased. The resulting AM waveform reacts by reaching a larger maximum value and smaller minimum value. In Figure 3(c), the intelligence amplitude is reduced and its frequency has gone up. The resulting AM waveform, therefore, has

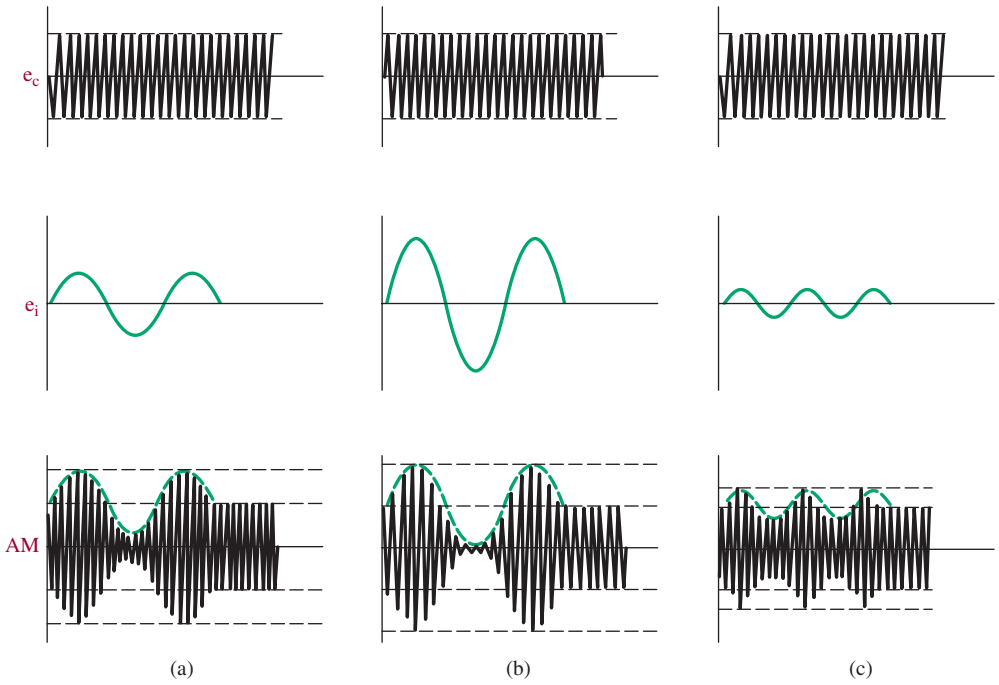


FIGURE 3 AM waveform under varying intelligence signal ($e_i$) conditions.

reduced maximums and minimums, and the rate at which it swings between these extremes has increased to the same frequency as the intelligence signal.

It may now be correctly concluded that both the top and bottom envelopes of an AM waveform are replicas of the frequency and amplitude of the intelligence (notice the 180° phase shift). However, the AM waveform does *not* include any component at the intelligence frequency. The equation for the AM waveform (envelope) is provided in Equation (1).

$$e = (E_c + E_i \sin \omega_i t)\sin \omega_c t \tag{1}$$

where $E_c$ = the peak amplitude of the carrier signal
$E_i$ = the peak amplitude of the intelligence signal
$\omega_i t$ = the radian frequency of the intelligence signal
$\omega_c t$ = the radian frequency of the carrier signal
$\omega = 2\pi f$

This equation indicates that an AM waveform will contain the carrier frequency plus the products of the sine waves defining the carrier and intelligence signals. Based on the trigonometric identity,

$$(\sin x)(\sin y) = 0.5 \cos(x - y) - 0.5 \cos(x + y) \tag{2}$$

where $x$ is the carrier frequency and $y$ is the intelligence frequency. The product of the carrier and intelligence sine waves will produce the sum and differences of the

two frequencies. If a 1-MHz carrier were modulated by a 5-kHz intelligence signal, the AM waveform would include the following components:

$$1 \text{ MHz} + 5 \text{ kHz} = 1{,}005{,}000 \text{ Hz (upper-side frequency)}$$
$$1 \text{ MHz} = 1{,}000{,}000 \text{ Hz (carrier frequency)}$$
$$1 \text{ MHz} - 5 \text{ kHz} = 995{,}000 \text{ Hz (lower-side frequency)}$$

This process is shown in Figure 4. Thus, even though the AM waveform has envelopes that are replicas of the intelligence signal, it does *not* contain a frequency component at the intelligence frequency.

The intelligence envelope is shown in the resultant waveform and results from connecting a line from each RF peak value to the next one for both the top and bottom halves of the AM waveform. The drawn-in envelope is not really a component of the waveform and would not be seen on an oscilloscope display. In addition, the top and bottom envelopes are *not* the upper- and lower-side frequencies, respectively. The envelopes result from the nonlinear combination of a carrier with two lower-amplitude signals spaced in frequency equal amounts above and below the carrier frequency. The increase and decrease in the AM waveform's amplitude is caused by the frequency difference in the side frequencies, which allows them alternately to add to and subtract from the carrier amplitude, depending on their instantaneous phase relationships.

The AM waveform in Figure 4(d) does not show the relative frequencies to scale. The ratio of $f_c$ to the envelope frequency (which is also $f_i$) is 1 MHz to 5 kHz,

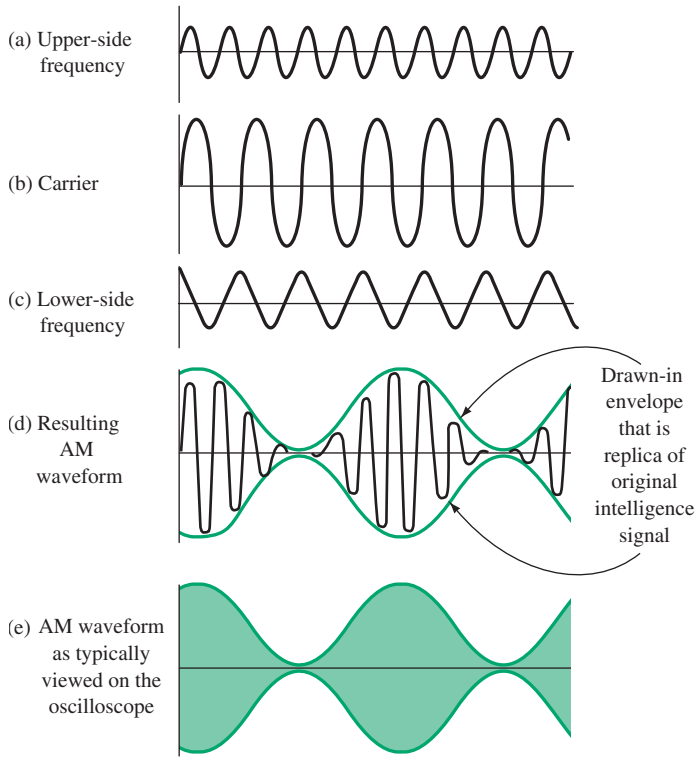


FIGURE 4 Carrier and side-frequency components result in AM waveform.

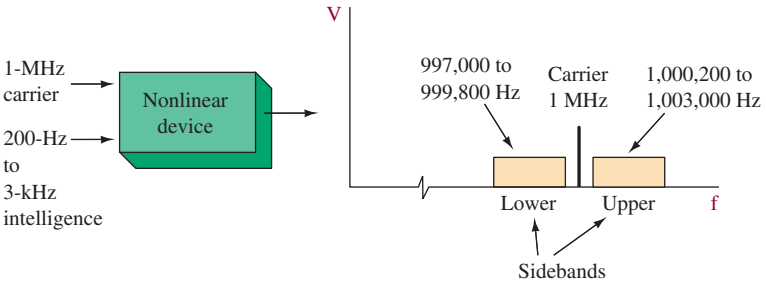


FIGURE 5 Modulation by a band of intelligence frequencies.

or 200 : 1. Thus, the fluctuating RF should show 200 cycles for every cycle of envelope variation. To do that in a sketch is not possible, and an oscilloscope display of this example, and most practical AM waveforms, results in a well-defined envelope but with so many RF variations that they appear as a blur, as shown in Figure 4(e).

Modulation of a carrier with a pure sine-wave intelligence signal has thus far been shown. However, in most systems the intelligence is a rather complex waveform that contains many frequency components. For example, the human voice contains components from roughly 200 Hz to 3 kHz and has a very erratic shape. If it were used to modulate the carrier, a whole *band* of side frequencies would be generated. The band of frequencies thus generated above the carrier is termed the **upper sideband,** while those below the carrier are called the **lower sideband.** This situation is illustrated in Figure 5 for a 1-MHz carrier modulated by a whole band of frequencies, which range from 200 Hz up to 3 kHz. The upper sideband is from 1,000,200 to 1,003,000 Hz, and the lower sideband ranges from 997,000 to 999,800 Hz.

**Upper Sideband**
band of frequencies produced in a modulator from the creation of sum-frequencies between the carrier and information signals

**Lower Sideband**
band of frequencies produced in a modulator from the creation of difference frequencies between the carrier and information signals

## Example 1

*A 1.4-MHz carrier is modulated by a music signal that has frequency components from 20 Hz to 10 kHz. Determine the range of frequencies generated for the upper and lower sidebands.*

### Solution

The upper sideband is equal to the sum of carrier and intelligence frequencies. Therefore, the upper sideband (usb) will include the frequencies from

$$1{,}400{,}000 \text{ Hz} + 20 \text{ Hz} = 1{,}400{,}020 \text{ Hz}$$

to

$$1{,}400{,}000 \text{ Hz} + 10{,}000 \text{ Hz} = 1{,}410{,}000 \text{ Hz}$$

The lower sideband (lsb) will include the frequencies from

$$1{,}400{,}000 \text{ Hz} - 10{,}000 \text{ Hz} = 1{,}390{,}000 \text{ Hz}$$

to

$$1{,}400{,}000 \text{ Hz} - 20 \text{ Hz} = 1{,}399{,}980 \text{ Hz}$$

This result is shown in Figure 6 with a frequency spectrum of the AM modulator's output.

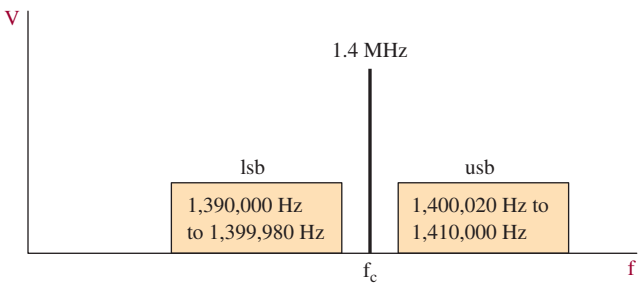


FIGURE 6 Solution for Example 1.

## Phasor Representation of AM

It is often helpful to use a phasor representation to help understand generation of an AM signal. For simplicity, let's consider a carrier modulated by a single sine wave with a 100 percent modulation index ($m = 1$). Remember that the AM signal will therefore be composed of the carrier, the usb at one-half the carrier amplitude with frequency equal to the carrier frequency plus the modulating signal frequency, and the lsb at one-half the carrier amplitude at the carrier frequency minus the modulation frequency. With the aid of Figure 7 we will now show how these three sine waves combine to form the AM signal.

1. The carrier phasor represents the peak value of its sine wave. The upper and lower sidebands are one-half the carrier amplitude at 100 percent modulation.

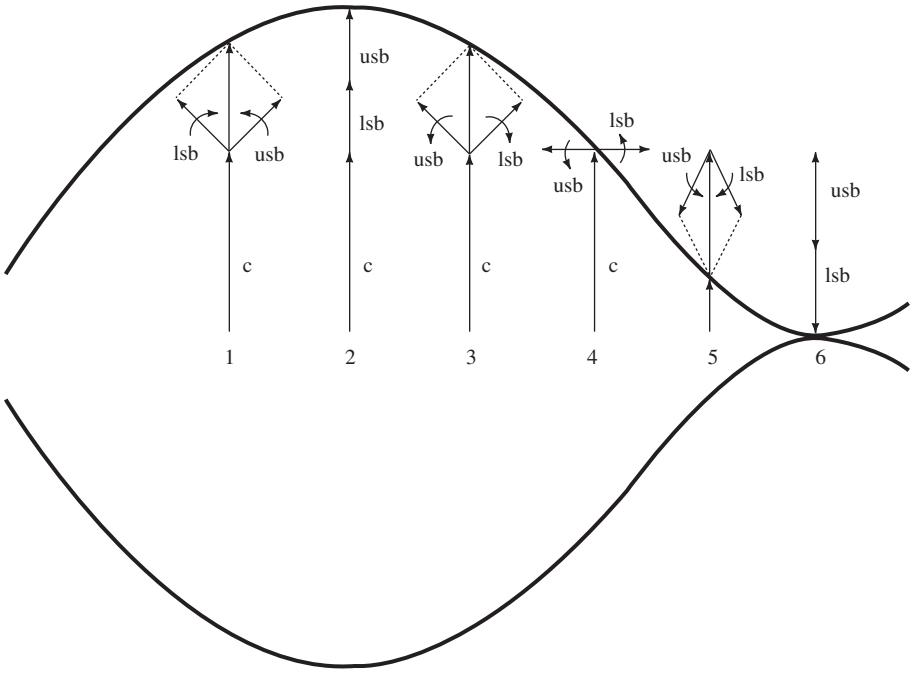


FIGURE 7 AM representation using vector addition of phasors.

2. A phasor rotating at a constant rate will generate a sine wave. One full revolution of the phasor corresponds to the full 360° of one sine-wave cycle. The rate of phasor rotation is called angular velocity ($\omega$) and is related to sine-wave frequency ($\omega = 2\pi f$).
3. The sideband phasors' angular velocity is greater and less than the carriers by the modulating signal's angular velocity. This means they are just slightly different from the carriers because the modulating signal is such a low frequency compared to the carrier. You can think of the usb as always slightly gaining on the carrier and the lsb as slightly losing angular velocity with respect to the carrier.
4. If we let the carrier phasor be the reference (stationary with respect to the sidebands) the representation shown in Figure 7 can be studied. Think of the usb phasor as rotating counterclockwise and the lsb phasor rotating clockwise with respect to the "stationary" carrier phasor.
5. The instantaneous amplitude of the AM waveform in Figure 7 is the vector sum of the phasors we have been discussing. At the peak value of the AM signal (point 2) the carrier and sidebands are all in phase, giving a sum of carrier + usb + lsb or twice the carrier amplitude, since each sideband is one-half the carrier amplitude.
6. At point 1 the vector sum of the usb and lsb are added to the carrier and result in an instantaneous value that is also equal to the value at point 3. Notice, however, that the position of the usb and lsb phasors are interchanged at points 1 and 3.
7. At point 4 the vector sum of the three phasors equals the carrier since the sidebands cancel each other. At point 6 the sidebands combine to equal the opposite (negative) of the carrier, resulting in the zero amplitude AM signal that theoretically occurs with exactly 100 percent modulation.

The phasor addition concept helps in understanding how a carrier and sidebands combine to form the AM waveform. It is also helpful in analyzing other communication concepts.



## 3 Percentage Modulation

**Percentage Modulation**
measure of the extent to which a carrier voltage is varied by the intelligence for AM systems

**Modulation Index**
another name for percentage modulation; represented as a decimal quantity between 0 and 1 for AM transmitters

**Modulation Factor**
another name for modulation index

In Section 2 it was determined that an increase in intelligence amplitude resulted in an AM signal with larger maximums and smaller minimums. It is helpful to have a mathematical relationship between the relative amplitude of the carrier and intelligence signals. The **percentage modulation** provides this, and it is a measure of the extent to which a carrier voltage is varied by the intelligence. The percentage modulation is also referred to as **modulation index** or **modulation factor,** and they are symbolized by $m$.

Figure 8 illustrates the two most common methods for determining the percentage modulation when modulating with sine waves. Notice that when the intelligence signal is zero, the carrier is unmodulated and has a peak amplitude labeled as $E_c$. When the intelligence reaches its first peak value (point $w$), the AM signal reaches a peak value labeled $E_i$ (the increase from $E_c$). Percentage modulation is then given as

$$\%m = \frac{E_i}{E_c} \times 100\% \qquad (3)$$

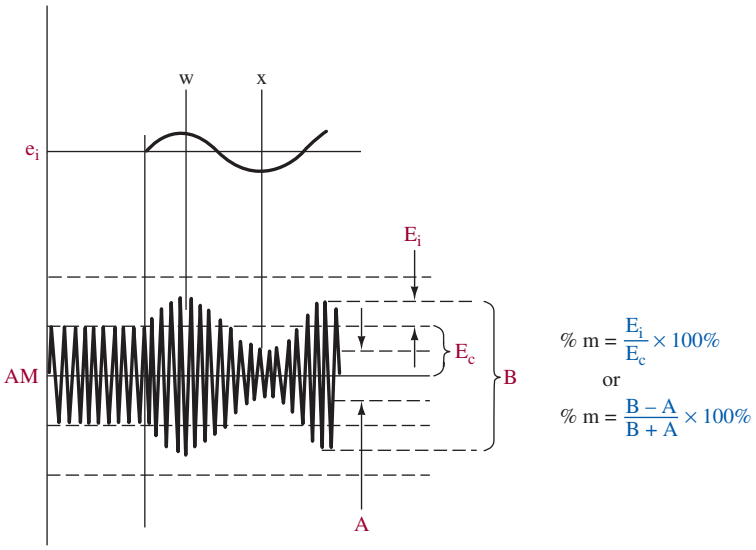


FIGURE 8 Percentage modulation determination.

or expressed simply by a ratio:

$$m = \frac{E_i}{E_c} \tag{4}$$

The same result can be obtained by utilizing the maximum peak-to-peak value of the AM waveform (point *w*), which is shown as *B*, and the minimum peak-to-peak value (point *x*), which is *A* in the following equation:

$$\%m = \frac{B - A}{B + A} \times 100\% \tag{5}$$

This method is usually more convenient in graphical (oscilloscope) solutions.

## Overmodulation

If the AM waveform's minimum value *A* falls to zero as a result of an increase in the intelligence amplitude, the percentage modulation becomes

$$\%m = \frac{B - A}{B + A} \times 100\% = \frac{B - O}{B + O} \times 100\% = 100\%$$

**Overmodulation** when an excessive intelligence signal overdrives an AM modulator producing percentage modulation exceeding 100 percent

**Sideband Splatter** distortion resulting in an overmodulated AM transmission creating excessive bandwidths

This is the maximum possible degree of modulation. In this situation the carrier is being varied between zero and double its unmodulated value. Any further increase in the intelligence amplitude will cause a condition known as **overmodulation** to occur. If this does occur, the modulated carrier will go to more than double its unmodulated value but will fall to zero for an interval of time, as shown in Figure 9. This "gap" produces distortion termed **sideband splatter,** which results in the transmission of frequencies outside a station's normal allocated range. This is an unacceptable condition because it causes severe interference to other stations and causes a loud splattering sound to be heard at the receiver.

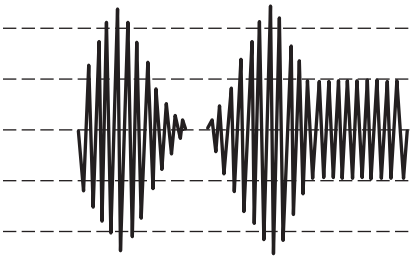

FIGURE 9 Overmodulation.

**Example 2**

*Determine the %m for the following conditions for an unmodulated carrier of 80 V peak-to-peak (p-p).*

| | Maximum p-p carrier (V) | Minimum p-p carrier (V) |
|---|---|---|
| (a) | 100 | 60 |
| (b) | 125 | 35 |
| (c) | 160 | 0 |
| (d) | 180 | 0 |
| (e) | 135 | 35 |

**Solution**

(a)
$$\%m = \frac{B - A}{B + A} \times 100\% \qquad (5)$$
$$= \frac{100 - 60}{100 + 60} \times 100\% = 25\%$$

(b)
$$\%m = \frac{125 - 35}{125 + 35} \times 100\% = 56.25\%$$

(c)
$$\%m = \frac{160 - 0}{160 + 0} \times 100\% = 100\%$$

(d) This is a case of overmodulation since the modulated carrier reaches a value more than twice its unmodulated value.

(e) The increase is greater than the decrease in the carrier's amplitude. This is a distorted AM wave.



## 4 AM Analysis

The instantaneous value of the AM waveform can be developed as follows. The equation for the amplitude of an AM waveform can be written as the carrier peak amplitude, $E_c$, plus the intelligence signal, $e_i$. Thus, the amplitude $E$ is

$$E = E_c + e_i$$

but $e_i = E_i \sin \omega_i t$, so that

$$E = E_c + E_i \sin \omega_i t$$

From Equation (2), $E_i = mE_c$, so that

$$\begin{aligned} E &= E_c + mE_c \sin \omega_i t \\ &= E_c(1 + m \sin \omega_i t) \end{aligned}$$

The instantaneous value of the AM wave is the amplitude term $E$ just developed times sin $\omega_c t$. Thus,

$$\begin{aligned} e &= E \sin \omega_c t \\ &= E_c(1 + m \sin \omega_i t) \sin \omega_c t \end{aligned}$$

Notice that the AM wave ($e$) is the result of the product of two sine waves. As defined by Equation 2, this product can be expanded with the help of the trigonometric relation $\sin x \sin y = \frac{1}{2}[\cos (x - y) - \cos (x + y)]$. Therefore,

$$e = \overbrace{E_c \sin \omega_c t}^{①} + \overbrace{\frac{mE_c}{2} \cos (\omega_c - \omega_i)t}^{②} - \overbrace{\frac{mE_c}{2} \cos (\omega_c + \omega_i)t}^{③}$$

The preceding equation proves that the AM wave contains the three terms previously listed: the carrier ①, the upper sideband at $f_c + f_i$ ③, and the lower sideband at $f_c - f_i$ ②. It also proves that the instantaneous amplitude of the side frequencies is $mE_c/2$. It shows conclusively that the bandwidth required for AM transmission is twice the highest intelligence frequency.

In the case where a carrier is modulated by a pure sine wave, it can be shown that at 100 percent modulation, the upper- and lower-side frequencies are one-half the amplitude of the carrier. In general, as just developed,

$$E_{SF} = \frac{mE_c}{2} \tag{6}$$

where $E_{SF}$ = side-frequency amplitude
$m$ = modulation index
$E_c$ = carrier amplitude

In an AM transmission, the carrier amplitude and frequency always remain constant, while the sidebands are usually changing in amplitude and frequency. The carrier contains no information since it never changes. However, it does contain the most power since its amplitude is always at least double (when $m = 100\%$) the sideband's amplitude. It is the sidebands that contain the information.

## Example 3

*Determine the maximum sideband power if the carrier output is 1 kW and calculate the total maximum transmitted power.*

### Solution

Since

$$E_{SF} = \frac{mE_c}{2} \tag{6}$$

it is obvious that the maximum sideband power occurs when $m = 1$ or 100 percent. At that percentage modulation, each side frequency is $\frac{1}{2}$ the carrier amplitude. Since power is proportional to the square of voltage, each sideband has $\frac{1}{4}$ of the carrier power or $\frac{1}{4} \times 1$ kW, or 250 W. Therefore, the total sideband power is 250 W $\times$ 2 = 500 W and the total transmitted power is 1 kW + 500 W, or 1.5 kW.

## Importance of High-Percentage Modulation

It is important to use as high a percentage modulation as possible while ensuring that overmodulation does not occur. The sidebands contain the information and have maximum power at 100 percent modulation. For example, if 50 percent modulation were used in Example 3, the sideband amplitudes are $\frac{1}{4}$ the carrier amplitude, and since power is proportional to $E^2$, we have $(\frac{1}{4})^2$, or $\frac{1}{16}$ the carrier power. Thus, total sideband power is now $\frac{1}{16} \times 1$ kW $\times$ 2, or 125 W. The actual transmitted intelligence is thus only $\frac{1}{4}$ of the 500 W sideband power transmitted at full 100 percent modulation. These results are summarized in Table 1. Even though the total transmitted power has only fallen from 1.5 kW to 1.125 kW, the effective transmission has only $\frac{1}{4}$ the strength at 50 percent modulation as compared to 100 percent. Because of these considerations, most AM transmitters attempt to maintain between 90 and 95 percent modulation as a compromise between efficiency and the chance of drifting into overmodulation.

A valuable relationship for many AM calculations is

$$P_t = P_c\left(1 + \frac{m^2}{2}\right) \tag{7}$$

where $P_t$ = total transmitted power (sidebands and carrier)
$P_c$ = carrier power
$m$ = modulation index

Equation (7) can be manipulated to utilize current instead of power. This is a useful relationship since current is often the most easily measured parameter of a transmitter's output to the antenna.

$$I_t = I_c\sqrt{1 + \frac{m^2}{2}} \tag{8}$$

**Table 1** Effective Transmission at 50% versus 100% Modulation

| Modulation Index, $m$ | Carrier power (kW) | Power in One Sideband (W) | Total Sideband Power (W) | Total Transmitted Power, $P_t$ (kW) |
|---|---|---|---|---|
| 1.0 | 1 | 250 | 500 | 1.5 |
| 0.5 | 1 | 62.5 | 125 | 1.125 |

where $I_t$ = total transmitted current
$I_c$ = carrier current
$m$ = modulation index

Equation (8) can also be used with $E$ substituted for $I$ $\left(E_t = E_c\sqrt{1 + m^2/2}\right)$.

## Example 4

*A 500-W carrier is to be modulated to a 90 percent level. Determine the total transmitted power.*

### Solution

$$P_t = P_c\left(1 + \frac{m^2}{2}\right) \tag{7}$$

$$P_t = 500\text{ W}\left(1 + \frac{0.9^2}{2}\right) = 702.5\text{ W}$$

## Example 5

*An AM broadcast station operates at its maximum allowed total output of 50 kW and at 95 percent modulation. How much of its transmitted power is intelligence (sidebands)?*

### Solution

$$P_t = P_c\left(1 + \frac{m^2}{2}\right) \tag{7}$$

$$50\text{ kW} = P_c\left(1 + \frac{0.95^2}{2}\right)$$

$$P_c = \frac{50\text{ kW}}{1 + (0.95^2/2)} = 34.5\text{ kW}$$

Therefore, the total intelligence signal is

$$P_i = P_t - P_c = 50\text{ kW} - 34.5\text{ kW} = 15.5\text{ kW}$$

## Example 6

*The antenna current of an AM transmitter is 12 A when unmodulated but increases to 13 A when modulated. Calculate %m.*

### Solution

$$I_t = I_c\sqrt{1 + \frac{m^2}{2}} \tag{8}$$

$$13\text{ A} = 12\text{ A}\sqrt{1 + \frac{m^2}{2}}$$

$$1 + \frac{m^2}{2} = \left(\frac{13}{12}\right)^2$$

$$m^2 = 2\left[\left(\frac{13}{12}\right)^2 - 1\right] = 0.34$$

$$m = 0.59$$

$$\%m = 0.59 \times 100\% = 59\%$$

## Example 7

*An intelligence signal is amplified by a 70% efficient amplifier before being combined with a 10-kW carrier to generate the AM signal. If you want to operate at 100 percent modulation, what is the dc input power to the final intelligence amplifier?*

### Solution

You may recall that the efficiency of an amplifier is the ratio of ac output power to dc input power. To modulate a 10-kW carrier fully requires 5 kW of intelligence. Therefore, to provide 5 kW of sideband (intelligence) power through a 70 percent efficient amplifier requires a dc input of

$$\frac{5 \text{ kW}}{0.70} = 7.14 \text{ kW}$$

If a carrier is modulated by more than a single sine wave, the effective modulation index is given by

$$m_{\text{eff}} = \sqrt{m_1^2 + m_2^2 + m_3^2 + \cdots} \tag{9}$$

The total effective modulation index must not exceed 1 or distortion (as with a single sine wave) will result. The term $m_{\text{eff}}$ can be used in all previously developed equations using $m$.

## Example 8

*A transmitter with a 10-kW carrier transmits 11.2 kW when modulated with a single sine wave. Calculate the modulation index. If the carrier is simultaneously modulated with another sine wave at 50 percent modulation, calculate the total transmitted power.*

### Solution

$$P_t = P_c\left(1 + \frac{m^2}{2}\right) \tag{7}$$

$$11.2 \text{ kW} = 10 \text{ kW}\left(1 + \frac{m^2}{2}\right)$$

$$m = 0.49$$

$$m_{\text{eff}} = \sqrt{m_1^2 + m_2^2} \qquad (9)$$
$$= \sqrt{0.49^2 + 0.5^2}$$
$$= 0.7$$
$$P_t = P_c\left(1 + \frac{m^2}{2}\right)$$
$$= 10\text{ kW}\left(1 + \frac{0.7^2}{2}\right)$$
$$= 12.45\text{ kW}$$



## 5 Circuits for AM Generation

Amplitude modulation is generated by combining carrier and intelligence frequencies through a nonlinear device. Diodes have nonlinear areas, but they are not often used because, being passive devices, they offer no gain. Transistors offer nonlinear operation (if properly biased) and provide amplification, thus making them ideal for this application. Figure 10(a) shows an input/output relationship for a typical bipolar junction transistor (BJT). Notice that at both low and high values of current, nonlinear areas exist. Between these two extremes is the linear area that should be used for normal amplification. One of the nonlinear areas must be used to generate AM.

Figure 10(b) shows a very simple transistor modulator. It operates with no base bias and thus depends on the positive peaks of $e_c$ and $e_i$ to bias it into the first nonlinear area shown in Figure 10(a). Proper adjustment of the levels of $e_c$ and $e_i$ is necessary for good operation. Their levels must be low to stay in the first nonlinear area, and the intelligence power must be one-half the carrier power (or less) for 100 percent modulation (or less). In the collector a parallel resonant circuit, tuned to the carrier frequency, is used to tune into the three desired frequencies—the upper and lower sidebands and the carrier. The resonant circuit presents a high impedance to the carrier (and any other close frequencies such as the sidebands) and thus allows a high output to those components, but its very low impedance to all other frequencies

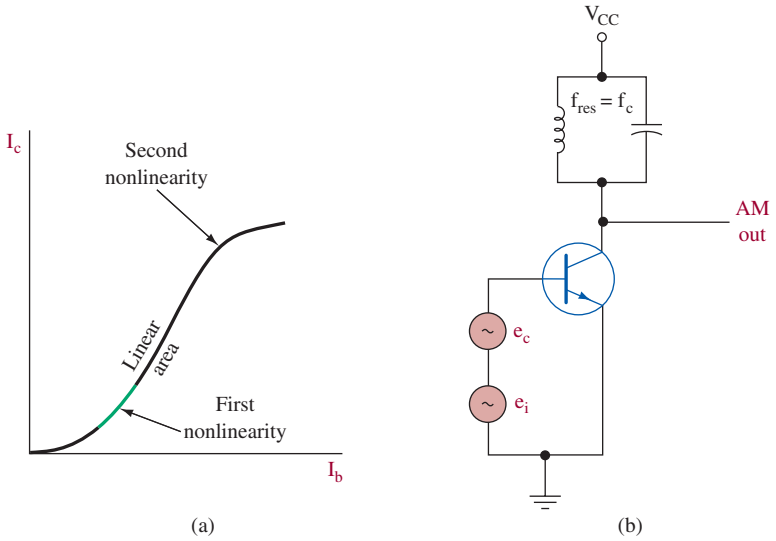


FIGURE 10 Simple transistor modulator.

effectively shorts them out. Recall that the mixing of two frequencies through a nonlinear device generates more than just the desired AM components, as illustrated in Figure 2. The tuned circuit then "sorts" out the three desired AM components and serves to provide good sinusoidal components by the flywheel effect.

**Base Modulation**
a modulation system in which the intelligence is injected into the base of a transistor

In practice, amplitude modulation can be obtained in several ways. For descriptive purposes, the point of intelligence injection is utilized. For example, in Figure 10(b) the intelligence is injected into the base, hence it is termed **base modulation.** *Collector* and *emitter modulation* are also used. In previous years, when vacuum tubes were widely used, the most common form was *plate modulation*, but *grid, cathode*, and (for pentodes) *suppressor-grid* and *screen-grid* modulation schemes were also utilized.

## High- and Low-Level Modulation

**High-Level Modulation**
in an AM transmitter, intelligence superimposed on the carrier at the last point before the antenna

**Low-Level Modulation**
in an AM transmitter, intelligence superimposed on the carrier; then the modulated waveform is amplified before reaching the antenna

Another common designator for modulators involves whether or not the intelligence is injected at the last possible place or not. For example, the plate-modulated circuit shown in Figure 11 has the intelligence added at the last possible point before the transmitting antenna and is termed a **high-level modulation** scheme. If the intelligence was injected at any previous point, such as at a base, emitter, grid, or cathode, or even at a previous stage, it would be termed **low-level modulation.** The designer's choice between high- and low-level systems is made largely on the basis of the required power output. For high-power applications such as standard radio broadcasting, where outputs are measured in terms of kilowatts instead of watts, high-level modulation is the most economical approach. Vacuum tubes are still the best choice for many high-frequency, high-power transmitter outputs. Recall that class C bias (device conduction for less than 180°) allows for the highest possible efficiency. It realistically provides 70 to 80 percent efficiency as compared to about 50 to 60 percent for the next best configuration, a class B (linear) amplifier. However, class C amplification cannot be used for reproduction of the complete AM signal, and hence large amounts of intelligence power must be injected at the final output to provide a high-percentage modulation.

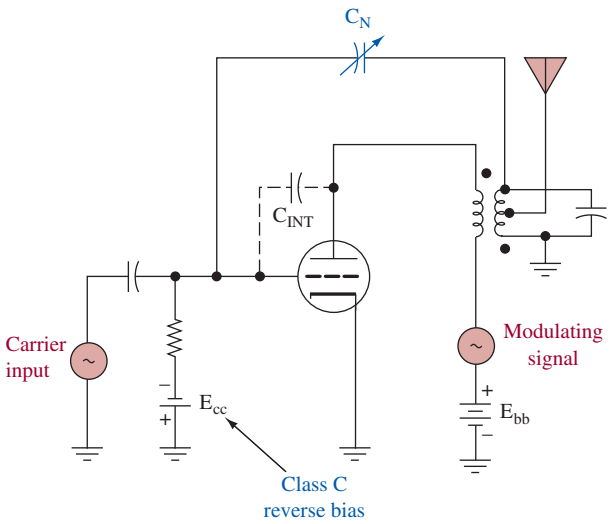


FIGURE 11 Plate-modulated class C amplifier.

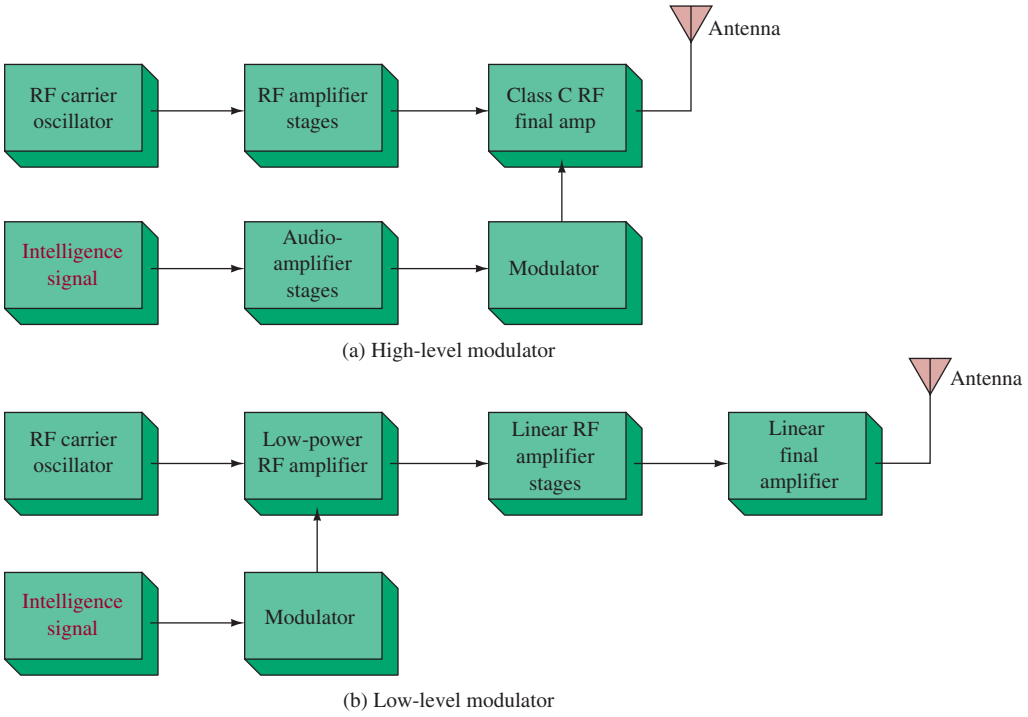


FIGURE 12 (a) High- and (b) low-level modulation.

The modulation process is accomplished in a nonlinear device, but all circuitry that follows must be linear. This is required to provide reproduction of the AM signal without distortion. The class C amplifier is not linear but can reproduce (and amplify) the single frequency carrier. However, it would distort the carrier and sidebands combination of the AM signal. This is due to their changing amplitude that would be distorted by the flywheel effect in the class C tank circuit. Block diagrams for typical high- and low-level modulator systems are shown in Figure 12(a) and (b), respectively. Note that in the high-level modulation system [Figure 12(a)] the majority of power amplification takes place in the highly efficient class C amplifier. The low-level modulation scheme has its power amplification take place in the much less efficient linear final amplifier.

In summary, then, high-level modulation requires larger intelligence power to produce modulation but allows extremely efficient amplification of the higher-powered carrier. Low-level schemes allow low-powered intelligence signals to be used, but all subsequent output stages must use less efficient linear (not class C) configurations. Low-level systems usually offer the most economical approach for low-power transmitters.

## Neutralization

One of the last remaining applications where tubes offer advantages over solid-state devices is in radio transmitters, where kilowatts of output power are required at high frequencies. Thus, the general configuration shown in Figure 11 is still being utilized. Note the variable capacitor, $C_N$, connected from the plate tank circuit back

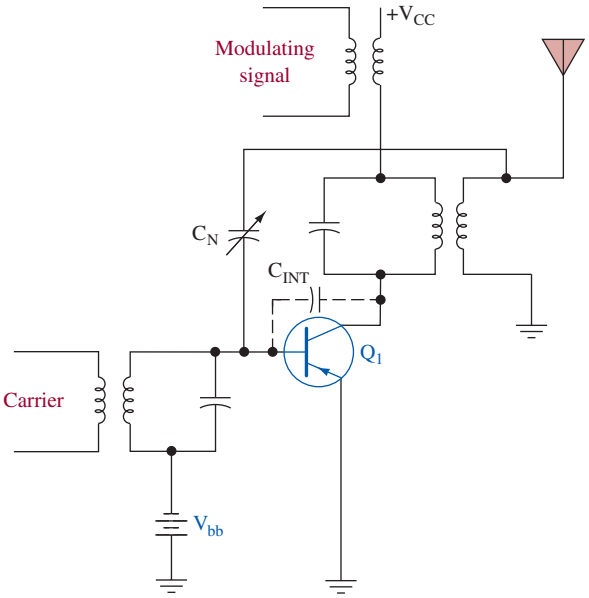


FIGURE 13 Collector modulator.

**Neutralizing Capacitor**
a capacitor that cancels fed-back signals to suppress self-oscillation

to the grid. It is termed the **neutralizing capacitor.** It provides a path for the return of a signal that is 180° out of phase with the signal returned from plate to grid via the internal interelectrode capacitance ($C_{INT}$) of the tube. $C_N$ is adjusted to cancel the internally fed-back signal to reduce the tendency of self-oscillation. The transformer in the plate is made to introduce a 180° phase shift by appropriate wiring.

Self-oscillation is a problem for all RF amplifiers (both linear and class C). Notice the neutralization capacitor ($C_N$) shown in the transistor amplifier in Figure 13. The self-oscillation can be at the tuned frequency or at a higher frequency. The higher-frequency self-oscillations are called **parasitic oscillations.** In any event these oscillations are undesirable. At the tuned frequency they prevent amplification from taking place. The parasitic oscillations introduce distortion and reduce desired amplification.

**Parasitic Oscillations**
higher-frequency self-oscillations in RF amplifiers

## Transistor High-Level Modulator

Figure 13 shows a transistorized class C, high-level modulation scheme. Class C operation provides an abrupt nonlinearity when the device switches on and off, which allows for the generation of the sum and difference frequencies. This is in contrast to the use of the gradual nonlinearities offered by a transistor at high and low levels of class A bias, as previously shown in Figure 10(a). Generally, the operating point is established to allow half the maximum ac output voltage to be supplied at the collector when the intelligence signal is zero. The $V_{bb}$ supply provides a reverse bias for $Q_1$ so that it conducts on only the positive peak of the input carrier signal. This, by definition, is class C bias because $Q_1$ conducts for less than 180° per cycle. The tank circuit in $Q_1$'s collector is tuned to resonate at $f_c$, and thus the full carrier sine wave is reconstructed there by the flywheel effect at the extremely high efficiency afforded by class C operation.

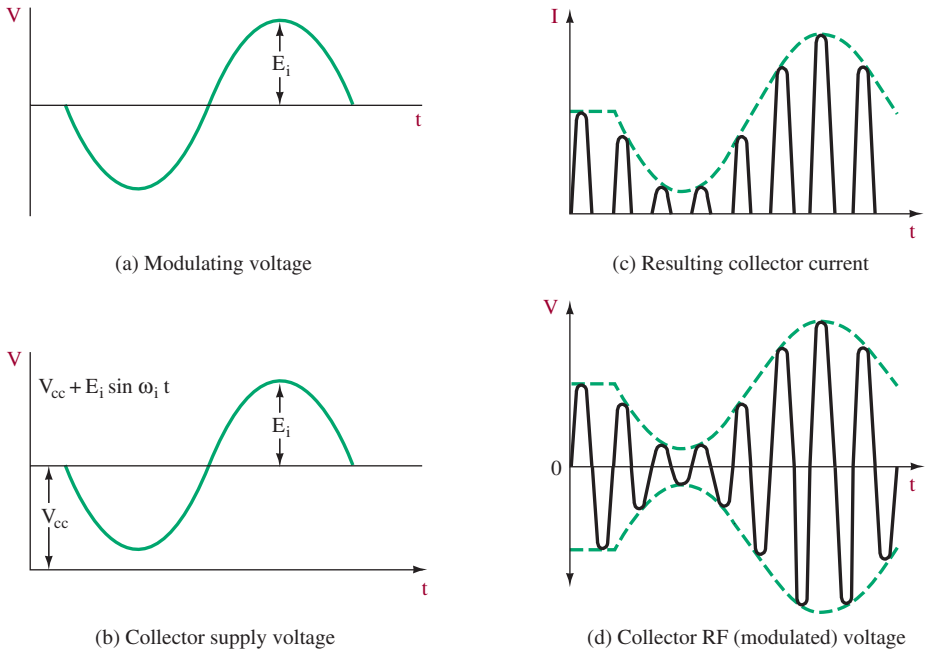


FIGURE 14 Collector modulator waveforms.

The intelligence (modulating) signal for the collector modulator of Figure 13 is added directly in series with the collector supply voltage. The net effect of the intelligence signal is to vary the energy available to the tank circuit each time $Q_1$ conducts on the positive peaks of carrier input. This causes the output to reach a maximum value when the intelligence is at its peak positive value and a minimum value when the intelligence is at its peak negative value. Since the circuit is biased to provide one-half of the maximum possible carrier output when the intelligence is zero, theoretically an intelligence signal level exists where the carrier will swing between twice its static value and zero. This is a fully modulated (100 percent modulation) AM waveform. In practice, however, the collector modulator cannot achieve 100 percent modulation because the transistor's knee in its characteristic curve changes at the intelligence frequency rate. This limits the region over which the collector voltage can vary, and slight collector modulation of the preceding stage is necessary to allow the high modulation indexes that are usually desirable. This is sometimes not a necessary measure in the tube-type high-level modulators.

Figure 14(a) shows an intelligence signal for a collector modulator, and Figure 14(b) shows its effect on the collector supply voltage. In Figure 14(c), the resulting collector current variations that are in step with the available supply voltages are shown. Figure 14(d) shows the collector voltage produced by the fly-wheel effect of the tank circuit as a result of the varying current peaks that are flowing through the tank.

## PIN Diode Modulator

Generating AM at frequencies above 100 MHz is expensive since available transistors and ICs are costly. Above 1 GHz (microwave frequencies) it is difficult at any cost with the exception of PIN diodes.

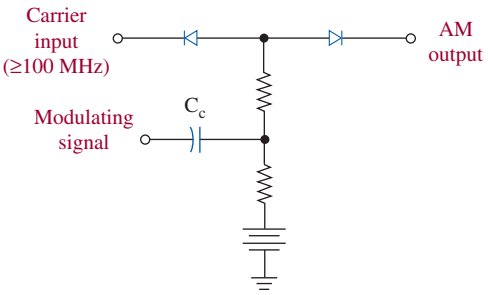


FIGURE 15 PIN diode modulator.

PIN diodes are used almost exclusively to generate AM at carrier frequencies above 100 MHz. A basic circuit is shown in Figure 15. The two PIN diodes act as variable resistors when operated above 100 MHz and when forward biased as shown. At lower frequencies they act like regular diodes. The variable resistance when forward biased at high frequencies is quite linear with respect to the level of forward bias. When the modulating signal (applied through $C_c$) is going positive, it increases the level of forward bias on the two PIN diodes, thereby reducing their resistance and increasing the carrier's output amplitude. The negative-going modulating signal subtracts from the forward bias, thereby decreasing the amount of carrier reaching the output.

The desired AM signal is produced as just described and the quality of the signal is determined by the linearity of the PIN diodes' resistance versus forward bias relationship. The resistance of the PIN diodes attenuates the signal and it must be amplified to bring the AM signal up to a usable level. As stated earlier, PIN diodes are the only practical AM modulators for carriers above about 100 MHz.

## Linear-Integrated-Circuit Modulators

The process of generating high-quality AM signals economically is greatly simplified by the availability of low-cost specialty linear integrated circuits (LICs). This is especially true for low-power systems, where low-level modulation schemes are attractive. As an example, the RCA CA3080 operational transconductance amplifier (OTA) can be used to provide AM with an absolute minimum of design considerations. The OTA is similar to conventional operational amplifiers inasmuch as they employ the usual differential input terminals, but its output is best described in terms of the output current, rather than voltage, that it can supply. In addition, it contains an extra control terminal that enhances flexibility for use in a variety of applications, including AM generation.

Figure 16(a) shows the CA3080 connected as an amplitude modulator. The gain of the OTA to the input carrier signal is controlled by variation of the amplifier-bias current at pin 5 ($I_{ABC}$) because the OTA transconductance (and hence gain) is directly proportional to this current. The level of the unmodulated carrier output is determined by the quiescent $I_{ABC}$ current, which is set by the value of $R_m$. The 100-kΩ potentiometer is adjusted to set the output voltage symmetrically about zero, thus nulling the effects of amplifier input offset voltage. Figure 16(b) shows the following:

*Top trace*—the original intelligence signal (red) superimposed on the upper AM envelope, which gives an indication of the high quality of this AM generator

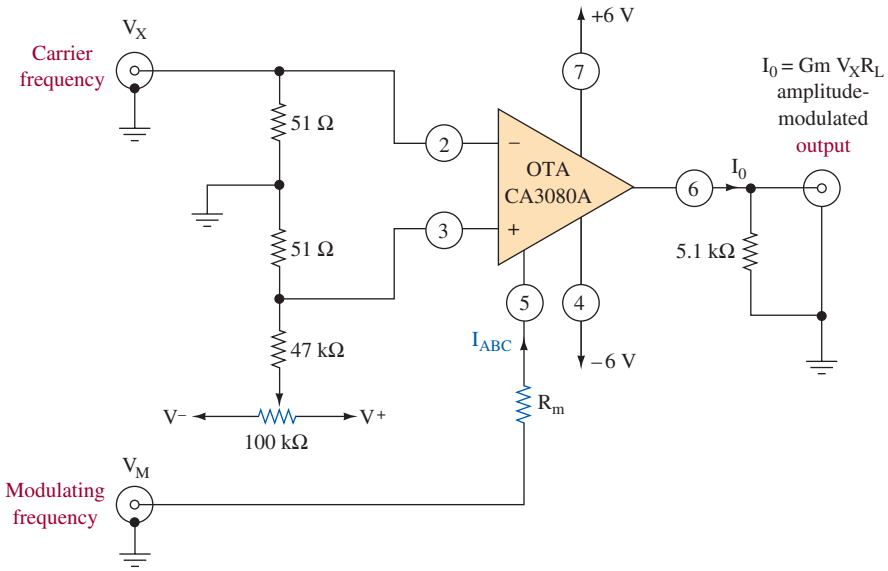


(a) Amplitude modulator circuit using the OTA

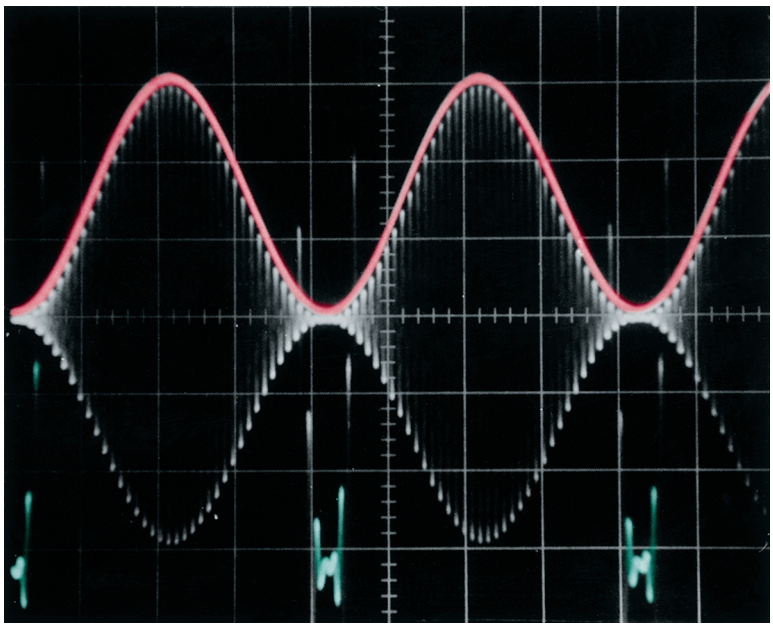

(b) Top trace: modulation frequency input ≈ 20 V p-p and 50 $\mu$sec/div
Center trace: amplitude modulation/output 500 mV/div and 50 $\mu$sec/div
Bottom trace: expanded output to show depth of modulation 20 mV/div and 50 $\mu$sec/div

**FIGURE 16** LIC amplitude modulator and resulting waveforms. (Courtesy of RCA Solid State Division.)

*Center trace*—the AM output

*Lower trace*—the AM output (green) with the scope's vertical sensitivity greatly expanded to show the ability to provide high degrees of modulation (99 percent in this case) with a high degree of quality

Another LIC modulator is shown in Figure 17(a). This circuit uses an HA-2735 programmable dual op amp—half of it to generate the carrier frequency ($A_1$) and the other half as the AM generator ($A_2$). In the HA-2735 op amp, the set current (pin 1 for $A_1$ and pin 13 for $A_2$) controls the frequency response and gain of each amplifier. This "programmable" function is unnecessary for the oscillator circuit, and thus $I_{set\,1}$ is fixed by the 147-kΩ resistor. Carrier frequencies up to about 2 MHz can be generated with $A_1$.

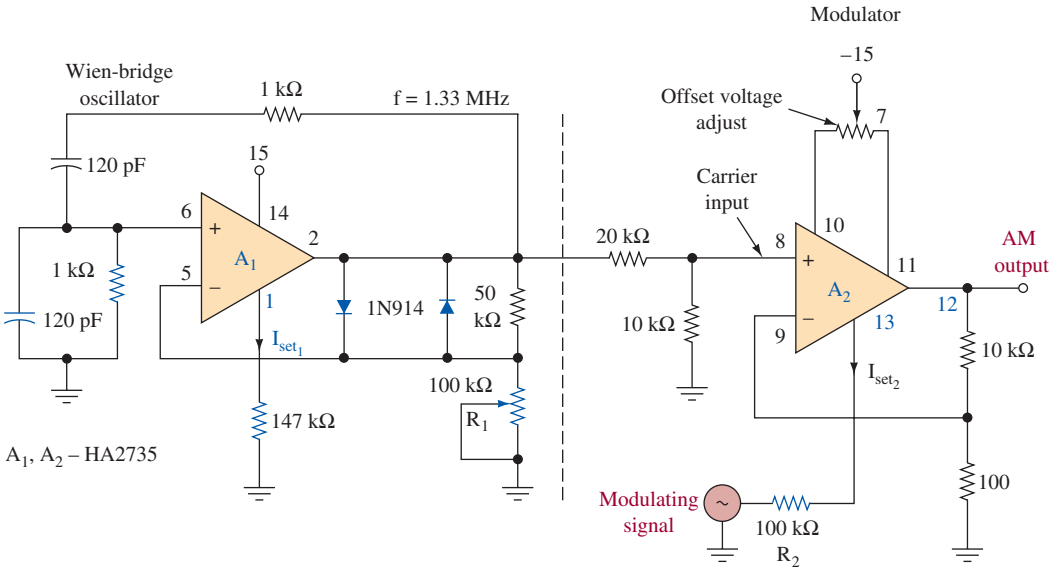


(a)

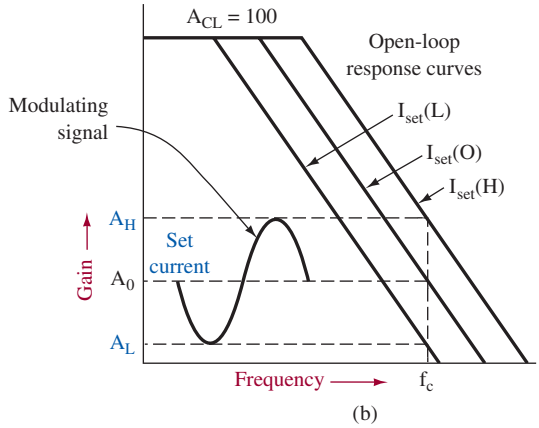


(b)

FIGURE 17 LIC modulator.

Amplifier $A_1$ operates as a Wien-bridge oscillator. Amplitude control of the oscillator is achieved with 1N914 clamping diodes in the feedback network. If the output voltage tends to increase, the diodes offer more conductance, which lowers the gain. Resistor $R_1$ is adjusted to minimize distortion and control the gain, and thus the amount of carrier applied to the modulator. With the components in Figure 17(a), the carrier frequency is approximately 1.33 MHz. This frequency can be changed by selection of different *RC* combinations in the Wien-bridge feedback circuit (1 kΩ and 120 pF).

Amplifier $A_2$'s open-loop response is controlled by the modulating voltage applied to $R_2$. The percentage of modulation is directly proportional to the modulating voltage. When sinusoidal modulation is applied to $R_2$, the circuit gain varies from a maximum, $A_H$, to a minimum, $A_L$, as $A_2$'s frequency response to the carrier frequency, $f_c$, is modulated by the set current [Figure 17(b)]. This results in a very distortion-free AM output at pin 12 of $A_2$. This circuit makes an ideal test generator for troubleshooting AM systems with carrier frequencies to 2 MHz. If a crystal oscillator were used instead of the Wien-bridge circuit, a high-quality AM transmitter could be fabricated with this AM generator.



## 6 AM Transmitter Systems

Section 5 dealt with specific circuits to generate AM. Those circuits are only one element of a transmitting system. It is important to obtain a good understanding of a complete transmitting unit, and that is the goal of this section.

Figure 18 provides block diagrams of simple high- and low-level AM transmitters. The oscillator that generates the carrier signal will invariably be crystal-controlled to maintain the high accuracy required by the Federal Communications Commission (FCC). The FCC regulates radio and telephone communications in the United States. In Canada the Canadian Radio-Television and Telecommunications Commission performs the same function.

The oscillator is followed by the buffer amplifier, which provides a high-impedance load for the oscillator to minimize drift. It also provides enough gain to drive the modulated amplifier sufficiently. Thus, the buffer amplifier could be a single

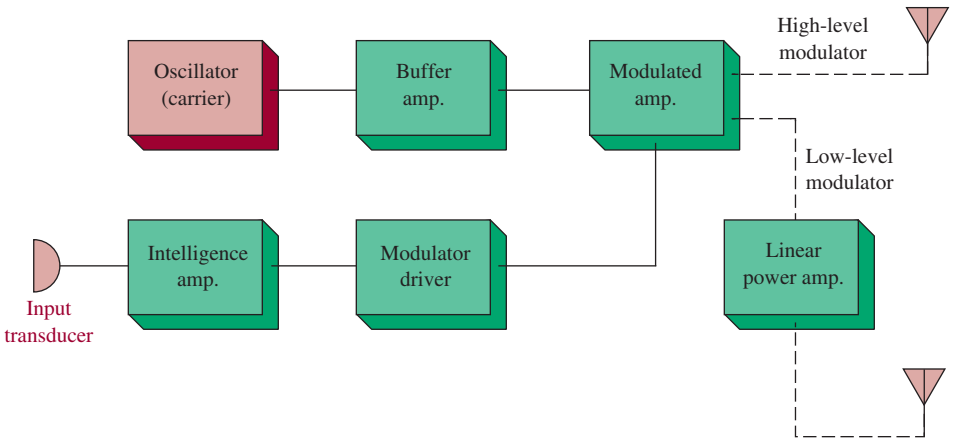


FIGURE 18 Simple AM transmitter block diagram.



Typical transmission equipment. (Courtesy of Stanley Coutant.)

stage, or however many stages are necessary to drive the following stage, the modulated amplifier.

The intelligence amplifier receives its signal from the input transducer (often a microphone) and contains whatever stages of intelligence amplification are required except for the last one. The last stage of intelligence amplification is called the *modulator*, and its output is mixed in the following stage with the carrier to generate the AM signal. The stage that generates this signal is termed the **modulated amplifier.** This is also the output stage for high-level systems, but low-level systems have whatever number (one or more) of linear power amplifier stages required. Recall that these stages are now amplifying the AM signal and must, therefore, be linear (class A or B), as opposed to the more efficient but nonlinear class C amplifier that can be used as an output stage in high-level schemes.

**Modulated Amplifier**
stage that generates the AM signal

## Citizen's Band Transmitter

Figure 19 provides a typical AM transmitter configuration for use on the 27-MHz class D citizen's band. It is taken from the Motorola Semiconductor Products Sector Applications Note AN596. It is designed for 13.6-V dc operation, which is the typical voltage level in standard 12-V automotive electrical systems. It employs low-cost plastic transistors and features a novel high-level collector modulation method using two diodes and a double-pi output filter network for matching to the antenna impedance and harmonic suppression.

The first stage uses an MPS 8001 transistor in a common-emitter crystal oscillator configuration. Notice the 27-MHz crystal, which provides excellent frequency stability with respect to temperature and supply voltage variations (well within the 0.005 percent allowance stipulated by FCC regulations for this band). This RF oscillator delivers about 100 mW of 27-MHz carrier power through the $L_1$

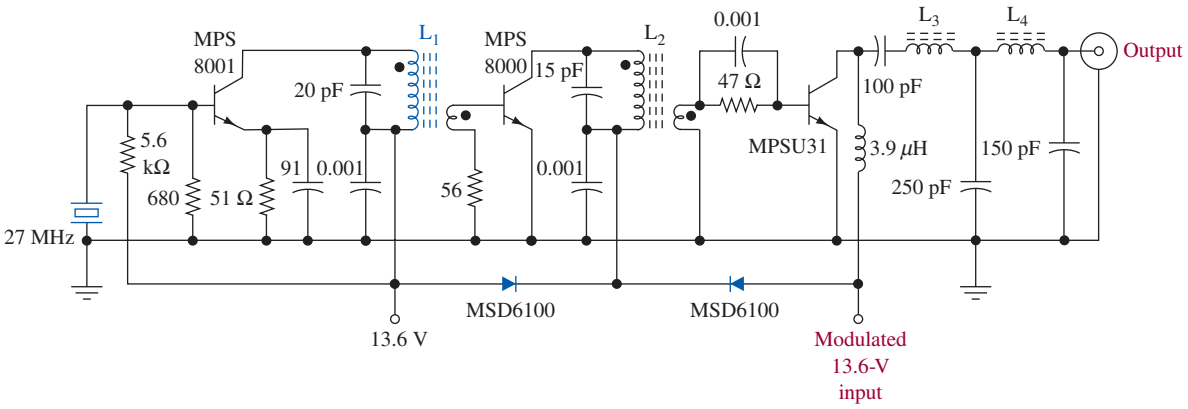


FIGURE 19 Class D citizen's band transmitter. (Courtesy of Motorola Semiconductor Products Sector.)

coupling transformer into the buffer (sometimes termed the **driver**) **amplifier,** which uses an MPS8000 transistor in a common-emitter configuration. Information that allows fabrication of the coils used in this transmitter is provided in Figure 20. The use of coils such as these is a necessity in transmitters and allows for required impedance transformations, interstage coupling, and tuning into desired frequencies when combined with the appropriate capacitance to form electrical resonance.

**Driver Amplifier** amplifier stage that amplifies a signal prior to reaching the final amplifier stage in a transmitter

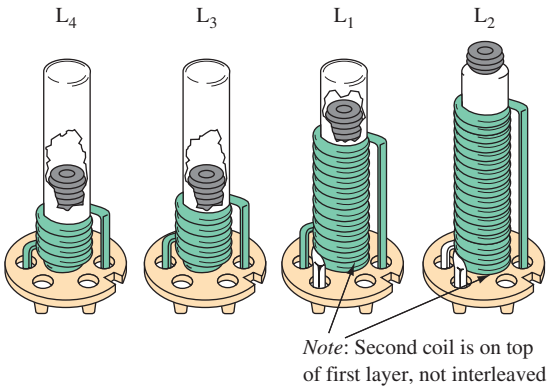


FIGURE 20 Coil description for transmitter shown in Figure 19: Conventional transformer coupling is employed between the oscillator and driver stages ($L_1$) and the driver and final stages ($L_2$). To obtain good harmonic suppression, a double-pi matching network consisting of ($L_3$) and ($L_4$) is utilized to couple the output to the antenna. All coils are wound on standard $\frac{1}{4}$-in. coil forms with No. 22 AWG wire. Carbonyl J $\frac{1}{4}$- × $\frac{3}{8}$-in.-long cores are used in all coils. Secondaries are overwound on the bottom of the primary winding. The cold end of both windings is the start (bottom), and both windings are wound in the same direction. $L_1$—Primary: 12 turns (close wound); secondary: 2 turns overwound on bottom of primary winding. $L_2$—Primary: 18 turns (close wound); secondary: 2 turns overwound on bottom of primary winding. $L_3$—7 turns (close wound). $L_4$—5 turns (close wound).

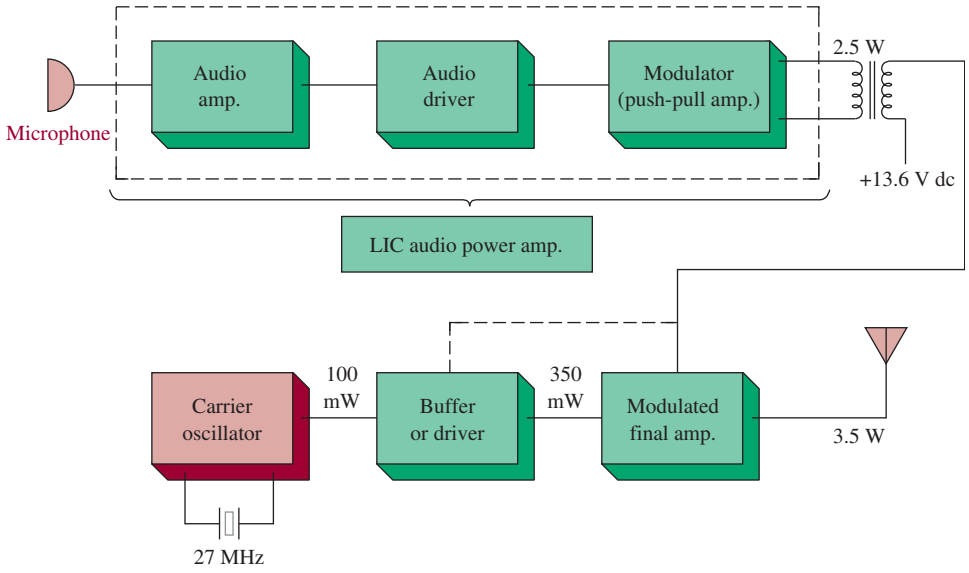


FIGURE 21 Citizen's band transmitter block diagram.

The buffer drives about 350 mW into the modulated amplifier. It uses an MPSU31 RF power transistor and can subsequently drive 3.5 W of AM signal into the antenna. This system uses high-level collector modulation on the MPSU31 final transistor, but to obtain a high modulation percentage it is necessary to collector-modulate the previous MPS8000 transistor. This is accomplished with the aid of the MSD6100 dual diode shown in Figure 19. The point labeled "modulated 13.6 V" is the injection point for the intelligence signal riding on the dc supply level of 13.6 V dc. A complete system block diagram for this transmitter is shown in Figure 21. To obtain 100 percent modulation requires about 2.5 W of intelligence power. Thus, the audio amplification blocks between the microphone and the coupling transformer could easily be accomplished by a single low-cost LIC audio power amplifier (shown in dashed lines) capable of 2.5 W of output. The audio output is combined with the dc by the coupling transformer, as is required to modulate the 27-MHz carrier.

## Antenna Coupler

Once the 3.5 W of AM signal is obtained at the final stage (MPSU31), it is necessary to "couple" this signal into the antenna. The coupling network for this system comprises $L_3$, $L_4$, and the 250- and 150-pF capacitors in Figure 19. This filter configuration is termed a *double-pi network*. To obtain maximum power transfer to the antenna, it is necessary that the transmitter's output impedance be properly matched to the antenna's input impedance. This means equality in the case of a resistive antenna or the complex conjugate in the case of a reactive antenna input. If the transmitter was required to operate at a number of different carrier frequencies, the coupling circuit is usually made variable to obtain maximum transmitted power at each frequency. Coupling circuits are also required to perform some filtering action (to eliminate unwanted frequency components), in addition to their efficient energy

transfer function. Conversely, a filter invariably performs a coupling function, and hence the two terms (filter and coupler) are really interchangeable, with what they are called generally governed by the function considered of major importance.

The double-pi network used in the citizen's band transmitter is very effective in suppressing (i.e., filtering out) the second and third harmonics, which would otherwise interfere with communications at 2 × 27 MHz and 3 × 27 MHz. It typically offers 37-dB second harmonic suppression and 55-dB third harmonic suppression. The capacitors and inductors in the double-pi network are resonant to allow frequencies in the 27-MHz region (the carrier and sidebands) to pass, but all other frequencies are severely attenuated. The ratio of the values of the two capacitors determines what part of the total impedance across $L_4$ is coupled to the antenna, and the value of the 150-pF capacitor has a direct effect on the output impedance.

### Transmitter Fabrication and Tuning

The fabrication of high-frequency circuits is much less straightforward than for low frequencies. The minimal inductance of a simple conductor or capacitance between two adjacent conductors can play havoc at high frequencies. Common sense and experimentation generally yield a suitable configuration. The information contained in Figure 22 provides a suggested printed circuit board layout and component mounting photograph for the high-frequency sections (shown schematically in Figure 19).

After assembly it is necessary to go through a tune-up procedure to get the transmitter on the air. Initially, $L_1$'s variable core must be adjusted to get the oscillator to oscillate. This is necessary to get its inductance precisely adjusted so that, in association with its shunt capacitance, it will resonate at the precise 27-MHz resonant frequency of the crystal. The tune-up procedure starts by adjusting the cores of all four coils one-half turn out of the windings. Then turn $L_1$ clockwise until the oscillator starts and continue for one additional turn. Ensure that the oscillator starts every time by turning the dc on and off (a process termed **keying**) several times. It if does not start reliably every time, turn $L_1$ clockwise one-quarter turn at a time until it does. Then tune the other coils in order, with the antenna connected, for maximum power output. Apply nearly 100 percent sine-wave intelligence modulation and retune $L_2$, $L_3$, and $L_4$ once again for maximum power output while observing the output on an oscilloscope to ensure that overmodulation and/or distortion do not occur.

**Keying**
ensuring that an oscillator starts by turning the dc on and off



## 7 Transmitter Measurements

### Trapezoid Patterns

Several techniques are available to make operational checks on a transmitter's performance. A standard oscilloscope display of the transmitted AM signal will indicate any gross deficiencies. This technique is all the better if a dual-trace scope is used to allow the intelligence signal to be superimposed on the AM signal, as illustrated in Figure 16. An improvement to this method is known as the *trapezoidal pattern*. It is illustrated in Figure 23. The AM signal is connected to the vertical input and the intelligence signal is applied to the horizontal input with the scope's internal sweep disconnected. The intelligence signal usually must be applied through an adjustable *RC* phase-shifting network, as shown, to ensure that it is exactly in phase

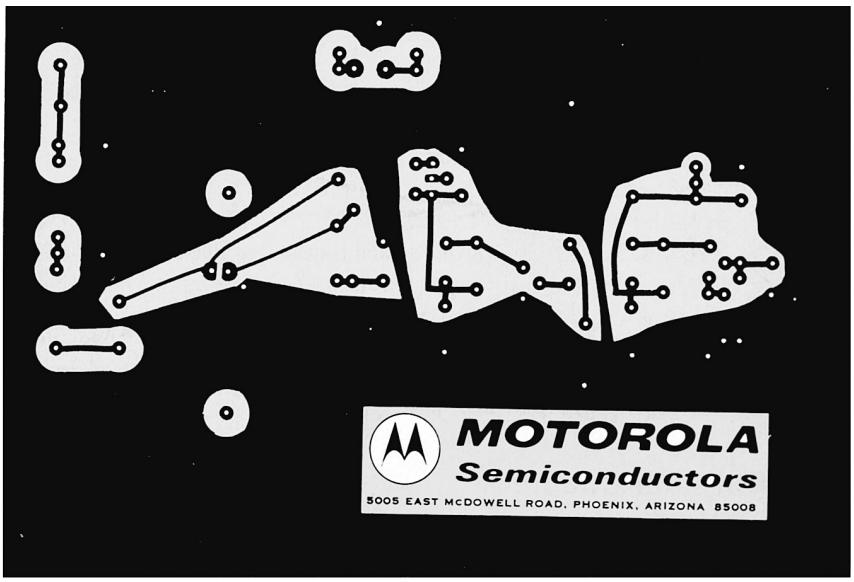


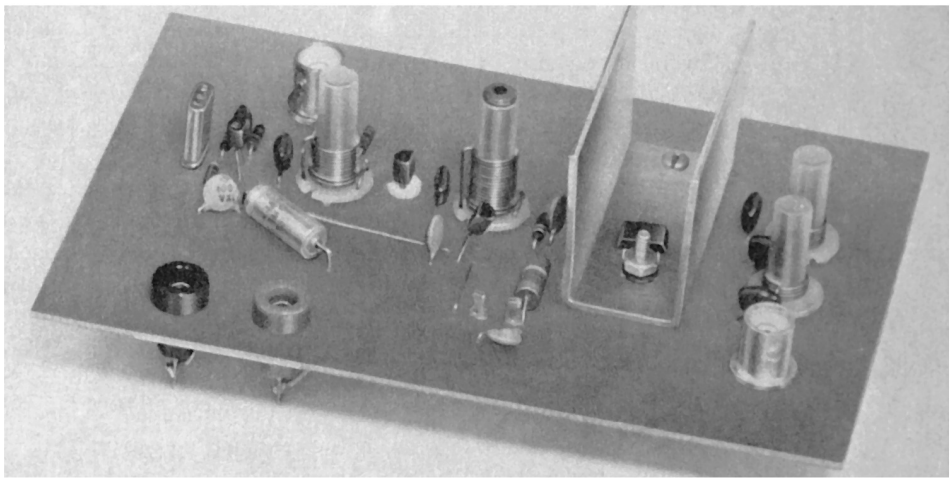

FIGURE 22 Citizen's band transmitter PC board layout and complete assembly pictorial. (Courtesy of Motorola Semiconductor Products, Inc.)

with the modulation envelope of the AM waveform. Figure 23(b) shows the resulting scope display with improper phase relationships, and Figure 23(c) shows the proper in-phase trapezoidal pattern for a typical AM signal. It easily allows percentage modulation calculations by applying the $B$ and $A$ dimensions to the formula presented previously,

$$\%m = \frac{B - A}{B + A} \times 100\% \tag{5}$$

In Figure 23(d), the effect of 0 percent modulation (just the carrier) is indicated. The trapezoidal pattern is simply a vertical line because there is no intelligence signal to provide horizontal deflection.

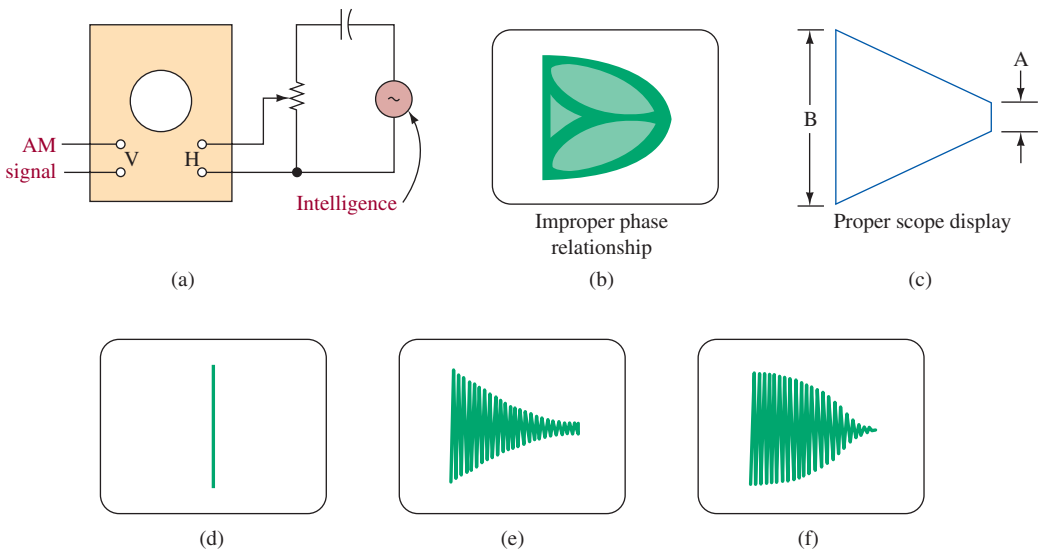


FIGURE 23 Trapezoidal pattern connection scheme and displays.

Figures 23(e) and (f) show two more trapezoidal displays indicative of some common problems. In both cases the trapezoid's sides are not straight (linear). The concave curvature at (e) indicates poor linearity in the modulation stage, which is often caused by improper neutralization or by stray coupling in a previous stage. The convex curvature at (f) is usually caused by improper bias or low carrier signal power (often termed **low excitation**).

**Low Excitation**
improper bias or low carrier signal power in an AM modulator

## Meter Measurement

It is possible to make some meaningful transmitter checks with a dc ammeter in the collector (or plate) of the modulated stage. If the operation is correct, this current should not change as the intelligence signal is varied between zero and the point where full modulation is attained. This is true because the increase in current during the crest of the modulated wave should be exactly offset by the drop during the trough. A distorted AM signal will usually cause a change in dc current flow. In the case of overmodulation, the current will increase further during the crest but cannot decrease below zero at the trough, and a net increase in dc current will occur. It is also common for this current to decrease as modulation is applied. This malfunction is termed **downward modulation** and is usually the result of insufficient excitation. The current increase during the modulation envelope crest is minimized, but the decrease during the trough is nearly normal.

**Downward Modulation**
the decrease in dc output current in an AM modulator usually caused by low excitation

## Spectrum Analyzers

The use of spectrum analyzers has become widespread in all fields of electronics, but especially in the communications industry. A **spectrum analyzer** visually displays (on a CRT) the amplitude of the components of a wave as a function of frequency. This can be contrasted with an oscilloscope display, which shows the amplitude of the

**Spectrum Analyzer**
instrument used to measure the harmonic content of a signal by displaying a plot of amplitude versus frequency

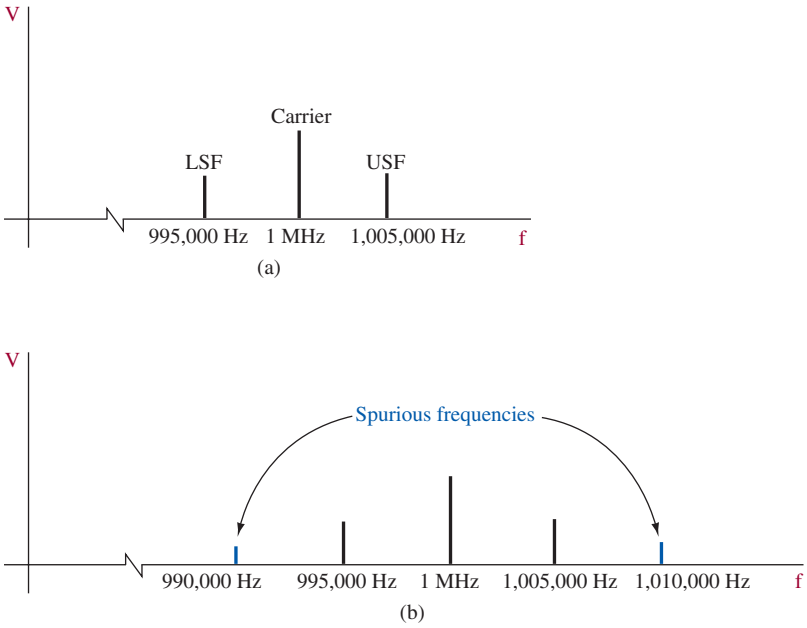


FIGURE 24 Spectrum analysis of AM waveforms.

**Spurious Frequencies**
extra frequency components that appear in the spectral display of a signal, signifying distortion

**Spurs**
undesired frequency components of a signal

total wave (all components) versus time. Thus, an oscilloscope shows us the time domain while the spectrum analyzer shows the frequency domain. In Figure 24(a) the frequency domain for a 1-MHz carrier modulated by a 5-kHz intelligence signal is shown. Proper operation is indicated since only the carrier and upper- and lower-side frequencies are present. During malfunctions, and to a lesser extent even under normal conditions, transmitters will often generate **spurious frequencies** as shown in Figure 24(b), where components other than just the three desired are present. These spurious undesired components are usually called **spurs,** and their amplitude is tightly controlled by FCC regulation to minimize interference on adjacent channels. The coupling stage between the transmitter and its antenna is designed to attenuate the spurs, but the transmitter's output stage must also be carefully designed to keep the spurs to a minimum level. The spectrum analyzer is obviously a very handy tool for use in evaluating a transmitter's performance.

The spectrum analyzer is, in effect, an automatic frequency-selective voltmeter that provides both frequency and voltage on its CRT display. It can be thought of as a radio receiver with broad frequency-range coverage and sharp sweep tuning, narrow-bandwidth circuits. The more sophisticated units are calibrated to read signals in dB or dBm. This provides better resolution between low-level sideband signals and the carrier and of course allows direct reading of power levels without resorting to calculation from voltage levels. Most recent spectrum analyzers utilize microprocessor principles (software programming) for ease of operation.

Figure 25 shows a typical spectrum analyzer. Available software packages link the waveform analyzer and a computer that enables simplification and automation of complex operations and measurements. A typical display on the computer's CRT is shown in Figure 25. It shows an AM carrier that has four spurious



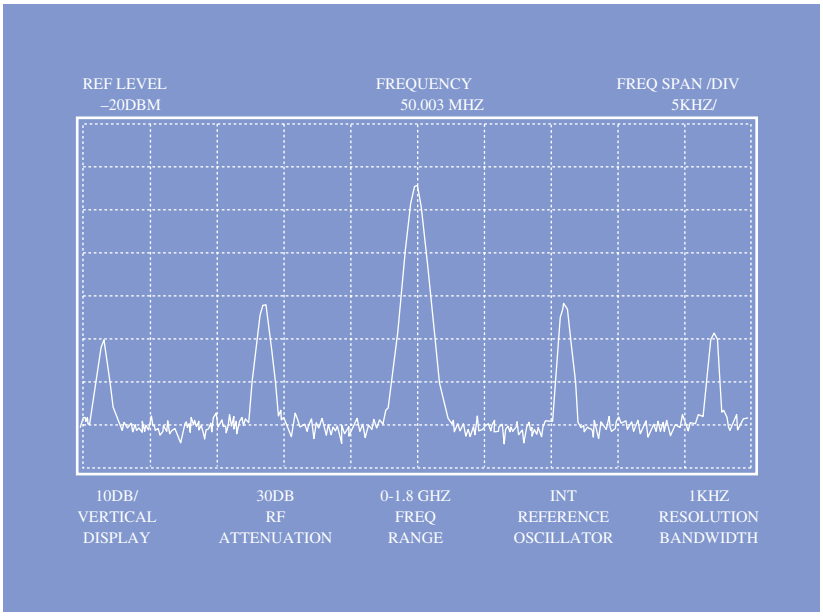


FIGURE 25 Spectrum analyzer and typical display. (Courtesy of Tektronix, Inc.)

outputs. Notice the noise between the spurs and the carrier. This is commonly referred to as the **noise floor** of the system under test.

**Noise Floor**
the baseline on a spectrum analyzer display

## Harmonic Distortion Measurements

Harmonic distortion measurements can be made easily by applying a spectrally pure signal source to the device under test (DUT). The quality of the measurement is dependent on the harmonic distortion of both the signal source and spectrum analyzer. The source provides a signal to the DUT and the spectrum analyzer is used to monitor the output. Figure 26 shows the results of a typical harmonic distortion measurement. The distortion can be specified by expressing the fundamental with respect to the largest harmonic in dB. This is termed the **relative harmonic distortion.**

**Relative Harmonic Distortion**
expression specifying the fundamental frequency component of a signal with respect to its largest harmonic in dB

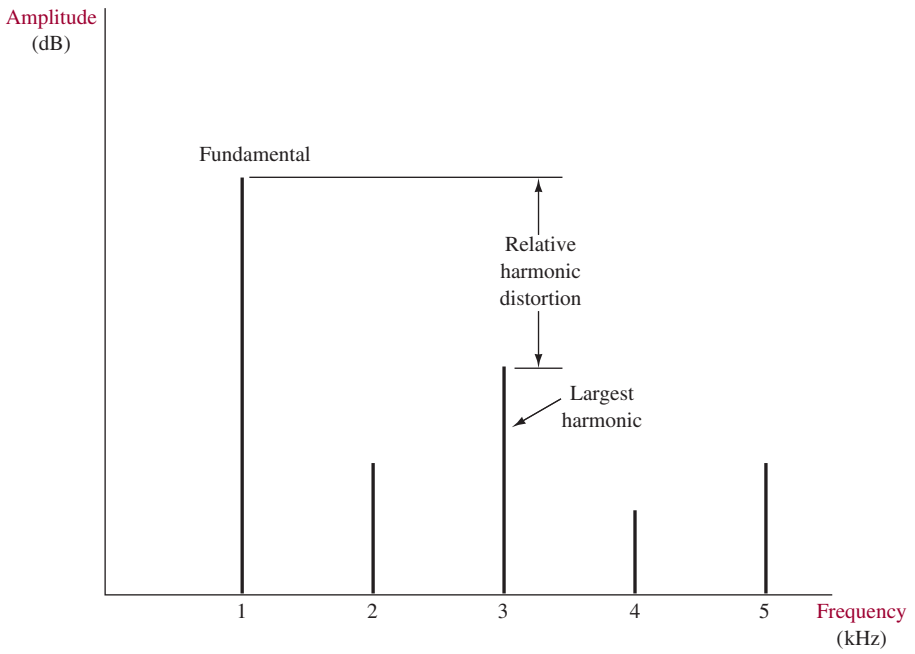


FIGURE 26 Relative harmonic distortion.

If the fundamental in Figure 26 is 1 V and the harmonic at 3 kHz (the largest distortion component) is 0.05 V, the relative harmonic distortion is

$$20 \log \frac{1 \text{ V}}{0.05 \text{ V}} = 26 \text{ dB}$$

**Total Harmonic Distortion**
a measure of distortion that takes all significant harmonics into account

A somewhat more descriptive distortion specification is **total harmonic distortion (THD).** THD takes into account the power in all the significant harmonics:

$$\text{THD} = \sqrt{(V_2^2 + V_3^2 + \cdots)/V_1^2} \qquad \textbf{(10)}$$

where $V_1$ is the rms voltage of the fundamental and $V_2$, $V_3$, . . . are the rms voltages of the harmonics. An infinite number of harmonics are theoretically created, but in practice the amplitude falls off for the higher harmonics. Virtually no error is introduced if the calculation does not include harmonics less than one-tenth of the largest harmonic.

## Example 9

*Determine the THD if the spectrum analyzer display in Figure 26 has $V_1 = 1$ V, $V_2 = 0.03$ V, $V_3 = 0.05$ V, $V_4 = 0.02$ V, and $V_5 = 0.04$ V.*

### Solution

$$\begin{aligned} \text{THD} &= \sqrt{(V_2^2 + V_3^2 + V_4^2 + V_5^2)/V_1^2} \qquad \textbf{(10)} \\ &= \sqrt{(0.03^2 + 0.05^2 + 0.02^2 + 0.04^2)/1^2} \\ &= 0.07348 \\ &= 7.35\% \end{aligned}$$

THD calculations are somewhat tedious when a large number of significant harmonics exist. Some spectrum analyzers include an automatic THD function that does all the work and prints out the THD percentage.

## Special RF Signal Measurement Precautions

The frequency-domain measurements of the spectrum analyzer provide a more thorough reading of RF frequency signals than does the time-domain oscilloscope. The high cost and additional setup time of the spectrum analyzer dictates the continued use of more standard measurement techniques—mainly voltmeter and oscilloscope usage. Whatever the means of measurement, certain effects must be understood when testing RF signals as compared to the audio frequencies with which you are probably more familiar. These effects are the loading of high-$Q$ parallel-resonant circuits by a relatively low impedance instrument and the frequency response shift that can be caused by test lead and instrument input capacitance.

The consequence of connecting a 50-Ω signal generator into an RF-tuned circuit that has a $Z_p$ in the kilohm region would be a drastically reduced $Q$ and increased bandwidth. The same loading effect would result if a low-impedance detector were used to make RF impedance measurements. This loading is minimized by using resistors, capacitors, or transformers in conjunction with the measurement instrument.

The consequence of test lead or instrument capacitance is to shift the circuit's frequency response. If you were looking at a 10-MHz AM signal that had its resonant circuit shifted to 9.8 MHz by the measurement capacitance, an obvious problem has resulted. Besides some simple attenuation, the equal amplitude relationship between the usb and lsb would be destroyed and waveform distortion results. This effect is minimized by using low-valued series-connected coupling capacitors, or canceled with small series-connected inductors. If more precise readings with inconsequential loading are necessary, specially designed resonant matching networks are required. They can be used as an add-on with the measuring instrument or built into the RF system at convenient test locations.

When testing a transmitter, the use of a dummy antenna is often a necessity. A **dummy antenna** is a resistive load used in place of the regular antenna. It is used to prevent undesired transmissions that may otherwise occur. The dummy antenna (also called a *dummy load*) also prevents damage to the output circuits that may occur under unloaded conditions.

**Dummy Antenna**
resistive load used in place of an antenna to test a transmitter without radiating the output signal



## 8 Troubleshooting

When traveling uncharted roads, having a map can make the difference between getting lost and finding your way. A plan for troubleshooting, like a map, can help guide you to an equipment malfunction. Made up of a logical sequence of troubleshooting steps, this troubleshooting map can help the technician or engineer hunt down the defect in a piece of electronic communications equipment. By developing and using this strategy, you can become very proficient at locating electronic problems and repairing them.

After completing this section you should be able to

- Describe the purpose of the inspection
- State the sequence of troubleshooting steps

- Troubleshoot an RF amplifier and oscillator
- Check for transmitter operation on proper frequency
- Correct for low transmitter output power

## Inspection

The first phase of any repair action is to do a visual inspection of the defective equipment. During this inspection look for broken wires, loose connections, discolored or burned resistors, and exploded capacitors. Burned resistors are easily seen and will give off a distinguishing odor. Equipment that has been dropped may have a broken printed circuit board (PCB). Connectors may have been knocked loose. Look for bad soldering and cold solder joints. Cold solder connections look dull and dingy as opposed to shiny. Intermittent faults are usually the result of cold solder joints. Components hot to the touch after the equipment has been on for a few minutes can indicate shorted components. Listen for unusual sounds when the equipment is turned on. Unusual sounds could lead you to the malfunctioning component. Many defects are found during this inspection phase, and the equipment frequently is fixed without further troubleshooting.

## Strategy for Repair

1. Verify That a Problem Does Exist Always verify that the reported problem exists before troubleshooting the equipment. By confirming the problem you will save time that could be wasted looking for a nonexistent defect. If the equipment is not completely dead, try to localize the symptom to a particular stage. Check the service literature for troubleshooting hints. Some manufacturers provide diagnostic charts to help pinpoint malfunctions. The more clues you gather, the more apt you are to associate a fault to a particular circuit function successfully. Another reason for confirming that the problem exists is to rule out operator error. The equipment owner or operator may not know all the equipment's functions and may consider the unit bad if it can't do something it wasn't designed for. Check the operating manual when in doubt about the equipment functions.

2. Isolate the Defective Stage When a problem has been verified in a piece of electronic equipment, begin troubleshooting to isolate the defect to a particular stage. Normally the defective stage can be found by signal tracing or signal injection. The oscilloscope can be used with either the signal tracing or signal injection method. An example of this is in Figure 23, where an AM transmitter's modulation is being monitored by an oscilloscope. As shown, the test pattern appears on the screen and represents over- or undermodulation of the AM transmitted signal. If the transmitted signal were incorrect, the modulator would be adjusted for the proper signal display.

A signal generator or a function generator can be used to supply a test signal at the input of the specific stage under examination. Figure 27 illustrates a dual-trace oscilloscope connected to an amplifier stage to show the input test signal and the output signal. The input signal is easily compared to the output signal with this test setup. If the output signal is missing or distorted, then the defective stage has been located.

3. Isolate the Defective Component Once the defective stage has been located, the next step is to find the bad component or components. Voltage and resistance measurements should be used to locate the defective component. Remember, voltage

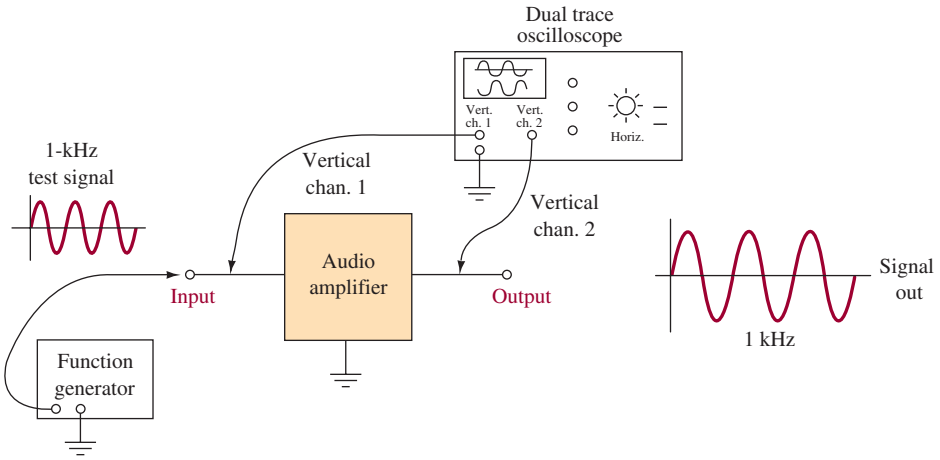


FIGURE 27 Comparing input and output signals.

measurements are made with respect to ground, and resistance measurements are done with the power off. The voltage and resistance measurements are compared to specified values stated in the service literature. Incorrect readings usually pinpoint the defective component. It is very possible that there may be more than one bad component in a malfunctioning circuit.

4. Replace the Defective Component and Hot Check Before replacing the bad component in a circuit, make sure that another component is not causing it to go bad. For example, a shorted diode or transistor can cause resistors to burn up. Diodes and transistors should be checked for shorted conditions before associated components are replaced. Replace defective components with exact replacement parts when possible. Once the defective component is replaced, ensure that the circuit is operating normally. You may need to do a few more voltage checks to confirm things are back to normal. Burn in (hot check) the equipment by turning it on and letting it operate a number of hours on the test bench. This burn-in is a vital part of equipment repair. If failure is going to reoccur, it will usually show up during this burn-in period.

## RF Amplifier Troubleshooting

***Bias Supply*** Many RF amplifiers utilize power from the previous stage to provide dc bias. Figure 28 shows how bias for the transistor $Q_1$ is developed. RF from the previous stage is rectified by the base–emitter junction of $Q_1$. The current flows

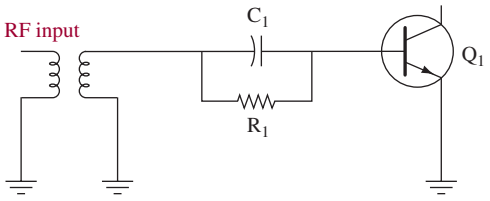


FIGURE 28 Self-bias circuit.

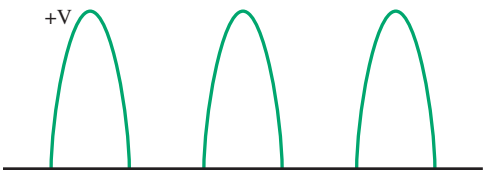


FIGURE 29 Voltage at $Q_1$ base.

through $R_1$ and the transformer to ground. The reactance of $C_1$ is low at RF, so the RF bypasses the resistor. $C_1$ also serves to filter the RF pulses and develop a dc voltage across $R_1$. At the base of $Q_1$, this dc voltage is negative with respect to ground. Therefore, $Q_1$ will be a class C amplifier conducting only on positive RF peaks. Figure 29 shows the instantaneous voltage at the base of $Q_1$ that you can observe with an oscilloscope.

***Shorted $C_1$*** If $C_1$ were to short, excessive drive would reach $Q_1$. No negative bias for $Q_1$ could be developed. This would cause $Q_1$ to draw excessive current and destroy itself. If $Q_1$ is bad, always check all components ahead of $Q_1$ before replacing it.

***Open $C_1$*** If $C_1$ were open, the drive reaching $Q_1$ would be greatly reduced. Bias voltage would be low and $Q_1$ would not develop full power output.

***Open $R_1$*** Resistors in these circuits may overheat and fail to open. $C_1$ will charge to the negative peak of the RF drive voltage because of the rectifier action of the base–emitter junction. This will cut $Q_1$ off and there will be no power output.

***Output Network*** Now consider possible faults in components on the output side of $Q_1$. Common faults are shorted blocking capacitors, overheated tuning capacitors, and open chokes.

***Shorted Blocking Capacitor*** Consider the circuit in Figure 30. Assume that capacitor $C_b$ has shorted. If this amplifier is connected to an antenna that is not dc grounded, there will be no effect at all. $C_b$ is not part of any tuning circuit; its job is to block the dc power supply from the following stage or antenna.

Many antennas show a short circuit to dc. In this case, excessive current would flow through $L_1$ and $L_2$, possibly damaging them and the power supply. If a shorted blocking capacitor is found, you should check for damage to the wiring or printed circuit board and the power supply.

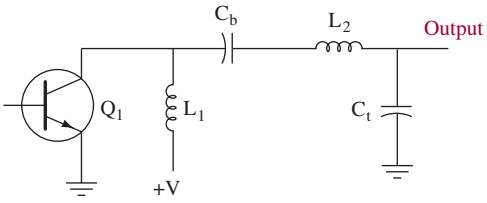


FIGURE 30 Output components.

***Faulty Tuning Capacitor*** The ac load impedance presented to the transistor $Q_1$ is dependent on $C_t$ and $L_2$ forming a tuned circuit that transforms the antenna impedance to the correct value. Assume that $C_t$ is shorted. In this case, the load impedance would probably be too low and $Q_1$ would draw excessive current. If $C_t$ were open, the opposite would happen. In either case, power output will be very low.

***Adjustments*** Assume that $C_t$ is simply not properly adjusted (it is usually variable). Power output will be too high or too low depending on the direction of error. High-power output will be accompanied by overheating of $Q_1$ due to excessive collector current.

$L_2$ is also usually adjustable. You must alternately adjust both $C_t$ and $L_2$ to obtain the proper impedance match. Look for minimum collector current and maximum power output. Use a spectrum analyzer to be certain the amplifier is not tuned to a harmonic. Some amplifiers will happily tune to the second or third harmonic. Others will break into self-oscillation on many frequencies at once. The spectrum analyzer will reveal many of the bad habits an amplifier might have.

## Checking a Transmitter

A word of caution before starting. High-power transmitters (perhaps anything greater than 10 kW) frequently employ vacuum tubes. These are high-voltage devices using voltages of 5 kV or more. *THESE VOLTAGES CAN KILL YOU*. Therefore, troubleshoot with extreme caution. Get experienced help until the following rules become second nature:

1. Before entering the transmitter cabinet, turn off all power switches. Better yet, remove the power plug from the socket. There may be no plug; the transmitter power input lines may be hard-wired to a fuse panel. If so, there will probably be a main switch; turn it off.
2. Even though you have turned off the power, make absolutely certain the high voltage is off before touching any circuits within the transmitter cabinet. The best and only sure test of this is to attach a bare, uninsulated piece of 12-gauge or larger copper wire (no insulation; you must be able to see that the entire length of the wire is intact) to a nonconducting wooden or plastic rod perhaps 2 ft long. Ground one end of this wire; that is, connect it to the metal chassis of the transmitter. Holding the end of the rod farthest from the wire, move the rod so that the ungrounded end of the wire touches those points that would have high voltage on them if the high voltage was still on. You'll see arcing if the voltage is still on.
3. Do not trust automatic switches (interlocks) that are supposed to turn off high-voltage circuits automatically.
4. Remember, charged capacitors—such as those used for power supply filters—can store a lethal charge. Short these units with your bare wire on a rod.

***Transmitter Not Operating on Proper Frequency*** The simplest way to determine a transmitter's operating frequency is to listen to its output signal on a receiver with a calibrated readout that accurately indicates the frequency to which the receiver is tuned. Such receivers may have a built-in crystal oscillator called a crystal calibrator. Calibrator oscillators are specially designed to have rich harmonic output. If, for example, a receiver had a calibrator operating at 100 kHz, signals would be heard on

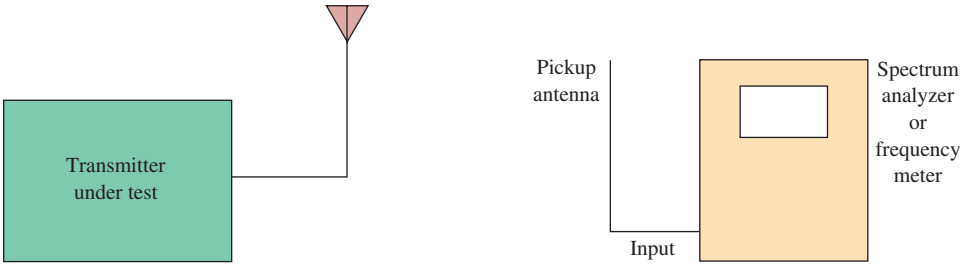


FIGURE 31 Determining a transmitter's output frequency.

the receiver at harmonics or multiples of 100 kHz over a broad range. Tune the receiver to the 100 kHz multiple nearest the frequency of the transmitter under test. Compare the frequency shown on the receiver's readout to the known multiple of 100 kHz and determine the error between the two. Then, tune to the transmitter frequency and adjust the receiver's readout up or down according to the error. For greater accuracy, the calibrator can be set to the frequency of radio station WWV, operated by the National Institute of Standards and Technology, Fort Collins, Colorado. This station broadcasts on accurate frequencies of 2.5, 5, 10, 15, and 20 MHz on the shortwave bands. Canadian station CHU, broadcasting from Ottawa, can also be used for calibration. It is found at 3330, 7335, and 14,670 kHz on the shortwave bands.

A transmitter's operating frequency can also be determined with a spectrum analyzer or a frequency meter, as shown in Figure 31. It may be necessary to connect a short antenna, perhaps a few feet long, to the input terminal of the measuring equipment if the transmitter has low output power.

If the transmitter is not operating on the correct frequency, adjust the carrier oscillator to the proper frequency. Check the transmitter's maintenance manual for instructions.

## Measuring Transmitter Output Power

Figure 32 shows the circuit to be used when measuring and troubleshooting the output power of a transmitter. The dummy load acts like an antenna because it absorbs the energy output from the transmitter without allowing that energy to radiate and interfere with other stations. Its input impedance must match (be equal to) the transmitter's output impedance; this is usually 50 Ω.

Suppose we are checking a low-power commercial transmitter that is rated at 250-W output (the dummy load and wattmeter must be rated for this level). If the output power is greater than the station license allows, the drive control must be

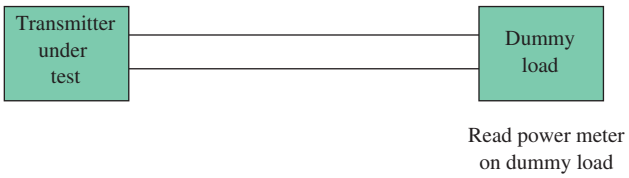


FIGURE 32 Checking the output power of an AM transmitter.

adjusted to bring the unit within specs. What if the output is below specs? Let us consider possible causes.

Do the easy tasks first. Perhaps the easiest thing to do in the case of low-power output is to check the drive control: Is it set correctly? Assuming it is, check the power supply voltage: Is it correct? Observe that voltage on a scope: Is it good, pure dc or has a rectifier shorted or opened, indicated by excessive ripple?

Once the easy tasks have been done, check the tuning of each amplifier stage between the carrier oscillator and the last or final amplifier driving the antenna. If the output power is still too low after peaking the tuning controls, use an oscilloscope to check the output voltage of each stage to see if they are up to specs. Are the signals good sinusoids? If a stage has a clean, undistorted input signal and a distorted output, there may be a defective component in the bias network. Or perhaps the tube/transistor needs checking and/or replacement.

## 9 Troubleshooting with Electronics Workbench™ Multisim

This chapter presents the modulation processes for producing an AM signal. Electronics Workbench™ Multisim can be used to simulate, make measurements, and troubleshoot AM modulator circuits, such as the simple transistor modulator shown in Figure 10. To begin this exercise, open **Fig2-33.ms7 (.msm)** found at www.pearsoned.com/electronics. You should have a circuit that looks like the one shown in Figure 33.

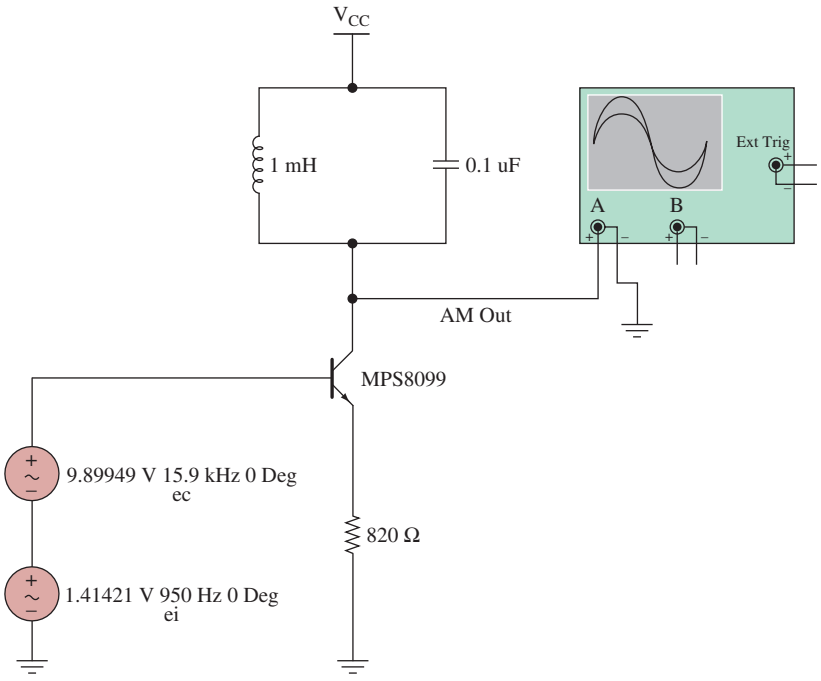


FIGURE 33 The Multisim component view for the simple transistor amplitude modulator circuit.

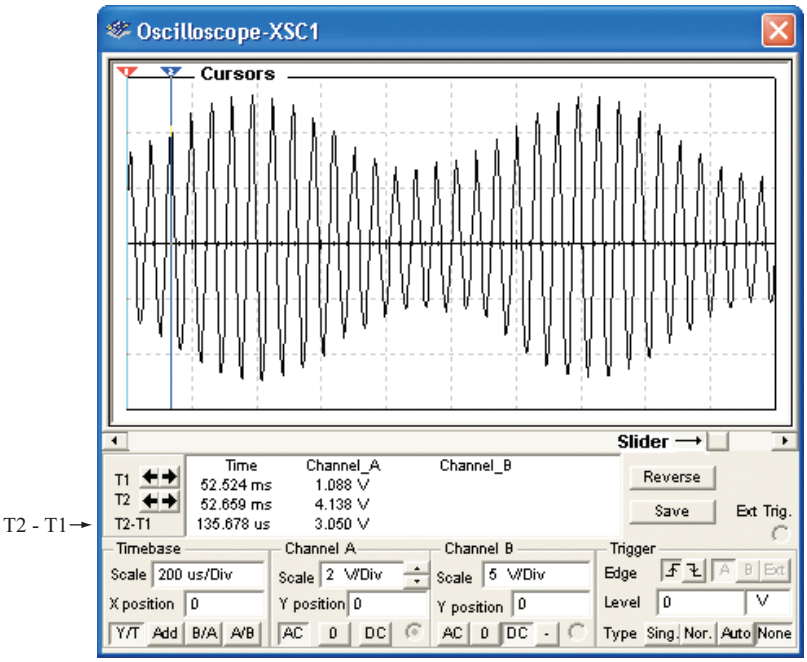


FIGURE 34 The Multisim oscilloscope control panel.

Begin the simulation by clicking on the start simulation switch. View the simulation results by double-clicking on the oscilloscope. You will obtain an image similar to the one shown in Figure 34. Is this an example of amplitude modulation? You can freeze the display by turning the simulation off or pressing pause. A record of the image is continually being saved. You can horizontally shift the displayed screen by adjusting the **Slider,** as shown in Figure 34. Use Equation 5 to determine the modulation index for this simulation. You should obtain a percentage modulation of about 33 percent.

Can you measure the frequency of the carrier from the display? It is easier to make the carrier frequency measurement if you change the timebase settings by clicking on the number in the **Timebase Scale** box. A set of up-down buttons will appear. These buttons are called *spinners*. Use the spinners to change the timebase to 50 $\mu$s/Div. Multisim provides a set of cursors on the oscilloscope display that makes it easy to measure the period of the wave. The cursors are located at the top of the oscilloscope. The red cursor is marked number 1 and the blue cursor is marked number 2. The position of the cursors can be moved by clicking on the triangles and dragging them to the desired location. Place cursor 1 at the start of the cycle for a sine wave and cursor 2 at the end of the cycle. The time between the two cursors is shown as **T2 − T1.** The frequency of the sine wave is obtained by inverting the value of the T2 − T1, or $f = 1/(\text{T2} - \text{T1})$. For this example, the measured period is 62.8 $\mu$s and $f = 1/62.8\ \mu\text{s} = 15.924$ kHz, which is close to the carrier frequency of the generator (15.9 kHz).

Electronics Workbench™ Multisim also provides an AM source. This feature is convenient when you are learning about the characteristics of an AM signal. The source can be selected by placing the mouse over the Sources icon, as shown in Figure 35. Clicking on the Sources icon provides a list of sources available in Multisim. A partial list of the sources available is shown in Figure 36. A source can be chosen

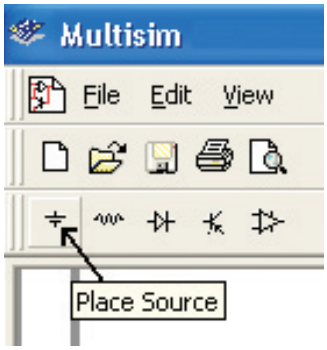


FIGURE 35 The Sources icon in Electronics Workbench™ Multisim.

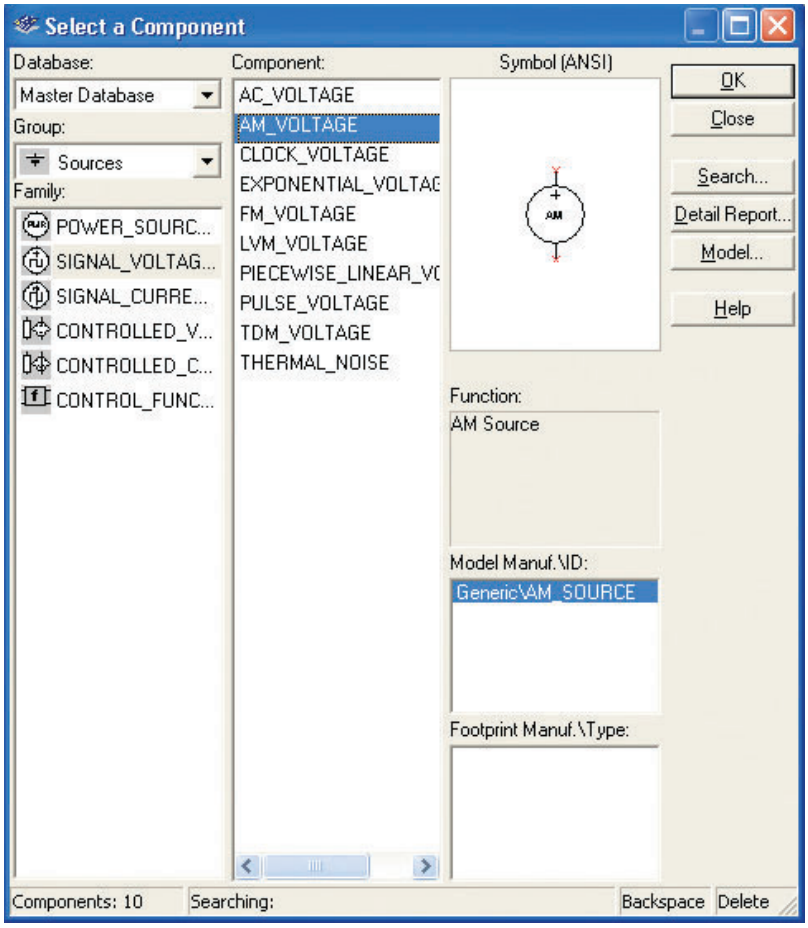


FIGURE 36 A partial list of the sources provided by Multisim and the location of the AM Sources icon.

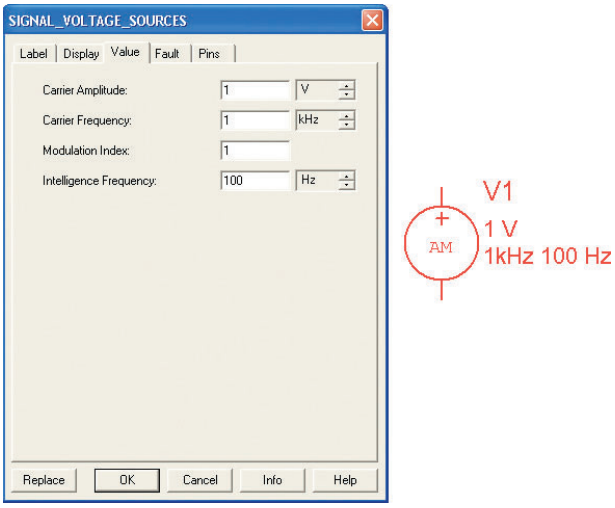


FIGURE 37 The AM Source and the menu for setting its parameters.

by selecting the source and clicking the OK button. The image will open behind the Sources menu. Use your mouse to drag the source to the desired location on the circuit diagram. The parameters for the AM signal can be set by double-clicking on the AM Source. The AM Source and its menu are both shown in Figure 37.

The AM Source menu allows you to set the carrier amplitude, frequency, modulation index, and modulation frequency. Refer to Sections 2, 3, and 4 for a review of amplitude modulation fundamentals. In this case, the carrier amplitude is set to 1 V, the carrier frequency is 1000 Hz, the modulation index is 1, and the modulation frequency is 100 Hz. The AM waveform produced by the source is shown in Figure 38. The AM Source is used in the Electronics Workbench exercises that follow this section.

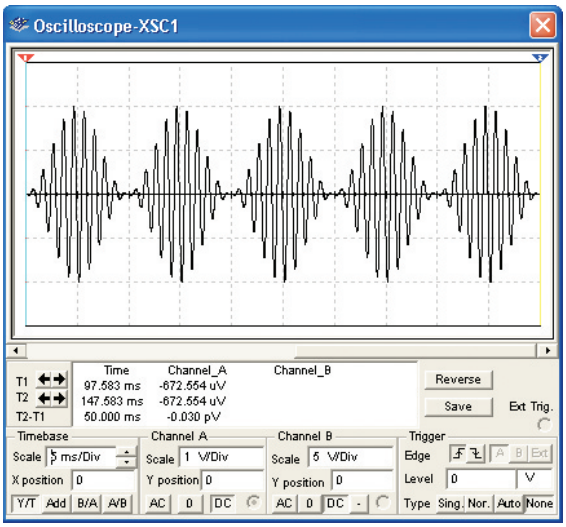


FIGURE 38 The output of the AM Source.

## Electronics Workbench™ Exercises

1. Open **FigE2-1** at www.pearsoned.com/electronics. Determine the modulation index.
2. Open **FigE2-2** at www.pearsoned.com/electronics. Use the cursors on the oscilloscope to verify that the carrier frequency is 15 kHz.
3. Open **FigE2-3** at www.pearsoned.com/electronics. Add the display of the input signals of the modulating circuit to the channel B input of your oscilloscope so that both the AM signal and the intelligence signal are displayed. Use the scale controls and the Y position so that both traces are easily viewed. Print out the traces displayed on the oscilloscope.



## Summary

In this chapter we studied the concept of amplitude modulation as it is specifically utilized in a transmitter. The major topics you should now understand include the following:

- the fundamental concept of amplitude modulation
- the meaning of modulation index and its use in AM calculations
- the cause of overmodulation and why it must be avoided
- the mathematical analysis of AM and the effect of modulation index on sideband amplitude
- the elements of a simple transistor AM generator and the analysis of its operation
- the understanding of high- and low-level modulation
- the analysis of a high-level transistor modulator
- the analysis and operation of various linear integrated circuit modulators
- the caution necessary when working with high-powered transmitters



## Questions and Problems

### Section 2

1. A 1500-kHz carrier and kHz intelligence signal are combined in a *nonlin-ear* device. List *all* the frequency components produced.

*2. If a 1500-kHz radio wave is modulated by a 2-kHz sine-wave tone, what frequencies are contained in the modulated wave (the actual AM signal)?

*3. If a carrier is amplitude-modulated, what causes the sideband frequencies?

*4. What determines the bandwidth of emission for an AM transmission?

5. Explain the difference between a sideband and a side frequency.

6. What does the phasor at point 6 in Figure 7 imply about the modulation signal?

7. Explain how the phasor representation can describe the formation of an AM signal.

8. Construct phasor diagrams for the AM signal in Figure 7 midway between points 1 and 2, 3 and 4, and 5 and 6.

*An asterisk preceding a number indicates a question that has been provided by the FCC as a study aid for licensing examinations.



## Section 3

*9. Draw a diagram of a carrier wave envelope when modulated 50 percent by a sinusoidal wave. Indicate on the diagram the dimensions from which the percentage of modulation is determined.
*10. What are some of the possible results of overmodulation?
*11. An unmodulated carrier is 300 V p-p. Calculate $\%m$ when its maximum p-p value reaches 400, 500, and 600 V. (33.3%, 66.7%, 100%)
12. If $A = 60$ V and $B = 200$ V as shown in Figure 8, determine $\%m$. (53.85%)
13. Determine $E_c$ and $E_m$ from Problem 12. ($E_c = 65$ Vpk, $E_m = 35$ Vpk)

## Section 4

14. Given that the amplitude of an AM waveform can be expressed as the sum of the carrier peak amplitude and intelligence signal, derive the expression for an AM signal that shows the existence of carrier and side frequencies.
15. A 100-V carrier is modulated by a 1-kHz sine wave. Determine the side-frequency amplitudes when $m = 0.75$. (37.5 V)
16. A 1-MHz, 40-V peak carrier is modulated by a 5-kHz intelligence signal so that $m = 0.7$. This AM signal is fed to a 50-Ω antenna. Calculate the power of each spectral component fed to the antenna. ($P_c = 16$ W, $P_{usb} = P_{lsb} = 1.96$ W)
17. Calculate the carrier and sideband power if the total transmitted power is 500 W in Problem 15. (390 W, 110 W)
18. The ac rms antenna current of an AM transmitter is 6.2 A when unmodulated and rises to 6.7 A when modulated. Calculate $\%m$. (57.9%)
*19. Why is a high percentage of modulation desirable?
*20. During 100 percent modulation, what percentage of the average output power is in the sidebands? (33.3%)
21. An AM transmitter has a 1-kW carrier and is modulated by three different sine waves having equal amplitudes. If $m_{eff} = 0.8$, calculate the individual values of $m$ and the total transmitted power. (0.462, 1.32 kW)
22. A 50-V rms carrier is modulated by a square wave. If only the first four harmonics are considered and $V = 20$ V, calculate $m_{eff}$. (0.77)

## Section 5

23. Describe two possible ways that a transistor can be used to generate an AM signal.
*24. What is *low-level modulation*?
*25. What is *high-level modulation*?
26. Explain the relative merits of high- and low-level modulation schemes.
*27. Why must some radio-frequency amplifiers be neutralized?
28. Describe the difference in effect of self-oscillations at a circuit's tuned frequency and parasitic oscillations.
29. Define *parasitic oscillation*.
30. How does self-oscillation occur?
31. Draw a schematic of a class C transistor modulator and explain its operation.
*32. What is the principal advantage of a class C amplifier?
33. Explain the circuit operation of the PIN diode modulator in Figure 15. What type of AM transmitters are likely to use this method of AM generation?
*34. What is the function of a quartz crystal in a radio transmitter?

## Section 6

*35. Draw a block diagram of an AM transmitter.
*36. What is the purpose of a buffer amplifier stage in a transmitter?
37. Describe the means by which the transmitter shown in Figure 19 is modulated.
*38. Draw a simple schematic diagram showing a method of coupling the radio-frequency output of the final power amplifier stage of a transmitter to an antenna.
39. Describe the functions of an antenna coupler.
*40. A ship radio-telephone transmitter operates on 2738 kHz. At a certain point distant from the transmitter the 2738-kHz signal has a measured field of 147 mV/m. The second harmonic field at the same point is measured as 405 $\mu$V/m. To the nearest whole unit in decibels, how much has the harmonic emission been attenuated below the 2738-kHz fundamental? (51.2 dB)
41. What is a *tune-up procedure*?

## Section 7

*42. Draw a sample sketch of the trapezoidal pattern on a cathode-ray oscilloscope screen indicating low percentage modulation without distortion.
43. Explain the advantages of the trapezoidal display over a standard oscilloscope display of AM signals.
44. A spectrum analyzer display shows that a signal is made up of three components only: 960 kHz at 1 V, 962 kHz at $\frac{1}{2}$ V, 958 kHz at $\frac{1}{2}$ V. What is the signal and how was it generated?
45. Define *spur*.
46. Provide a sketch of the display of a spectrum analyzer for the AM signal described in Problem 63 at both 20 percent and 90 percent modulation. Label the amplitudes in dBm.
47. The spectrum analyzer display shown in Figure 25 is calibrated at 10 dB/vertical division and 5 kHz/horizontal division. The 50.0034-MHz carrier is shown riding on a $-20$-dBm noise floor. Calculate the carrier power, the frequency, and the power of the spurs. (2.51 W, 50.0149 MHz, 49.9919 MHz, 50.0264 MHz, 49.9804 MHz, 6.3 mW, 1 mW)
*48. What is the purpose of a *dummy antenna*?
49. An amplifier has a spectrally pure sine-wave input of 50 mV. It has a voltage gain of 60. A spectrum analyzer shows harmonics of 0.035 V, 0.027 V, 0.019 V, 0.011 V, and 0.005 V. Calculate the total harmonic distortion (THD) and the relative harmonic distortion. (2.864%, 38.66 dB)
50. An additional harmonic ($V_6 = 0.01$ V) was neglected in the THD calculation shown in Example 9. Determine the percentage error introduced by this omission. (0.91%)

## Section 8

51. When troubleshooting, what is the purpose of inspection? Describe the various steps involved in this process.
52. After a repair has been made, how is a hot check accomplished?
53. Discuss the function of $C_1$ in Figure 28 and explain the effect if it should fail by either shorting or becoming an open circuit.
54. Explain the dangers of working on high-power transmitters and describe the precautions that should be taken.



55. Describe why and how a dummy load is used in checking the output of a transmitter. Why is the impedance of the dummy load an important consideration?
56. There is no output from $Q_1$ in Figure 28. Briefly describe a plan to isolate the problem.
57. Describe the output of the amplifier in Figure 28 if $R_1$ is open.
58. Explain the advantages of using a spectrum analyzer.
59. If the inductor $L_2$ in Figure 30 is shorted, describe its output. Assume the load is an antenna that is not grounded.
60. Describe some of the physical defects of a system that are obvious to the eye.

## Questions for Critical Thinking

61. Would the *linear* combination of a low-frequency intelligence signal and a high-frequency carrier signal be effective as a radio transmission? Why or why not?
62. You are analyzing an AM waveform. What significance do the upper and lower envelopes have?
63. An AM transmitter at 27 MHz develops 10 W of carrier power into a 50-Ω load. It is modulated by a 2-kHz sine wave between 20 and 90 percent modulation. Determine:
    (a) Component frequencies in the AM signal.
    (b) Maximum and minimum waveform voltage of the AM signal at 20 percent and 90 percent modulation. (25.3 to 37.9 V peak, 3.14 to 60.1 V peak)
    (c) Sideband signal voltage and power at 20 percent and 90 percent modulation. (2.24 V, 0.1 W, 10.06 V, 2.025 W)
    (d) Load current at 20 percent and 90 percent modulation. (0.451A, 0.530A)
64. Compare the display of an oscilloscope to that of a spectrum analyzer.

# AMPLITUDE MODULATION RECEPTION

From *Modern Electronic Communication*, Ninth Edition, Jeffrey S. Beasley, Gary M. Miller. Copyright © 2008 by Pearson Education, Inc. Published by Prentice Hall. All rights reserved.

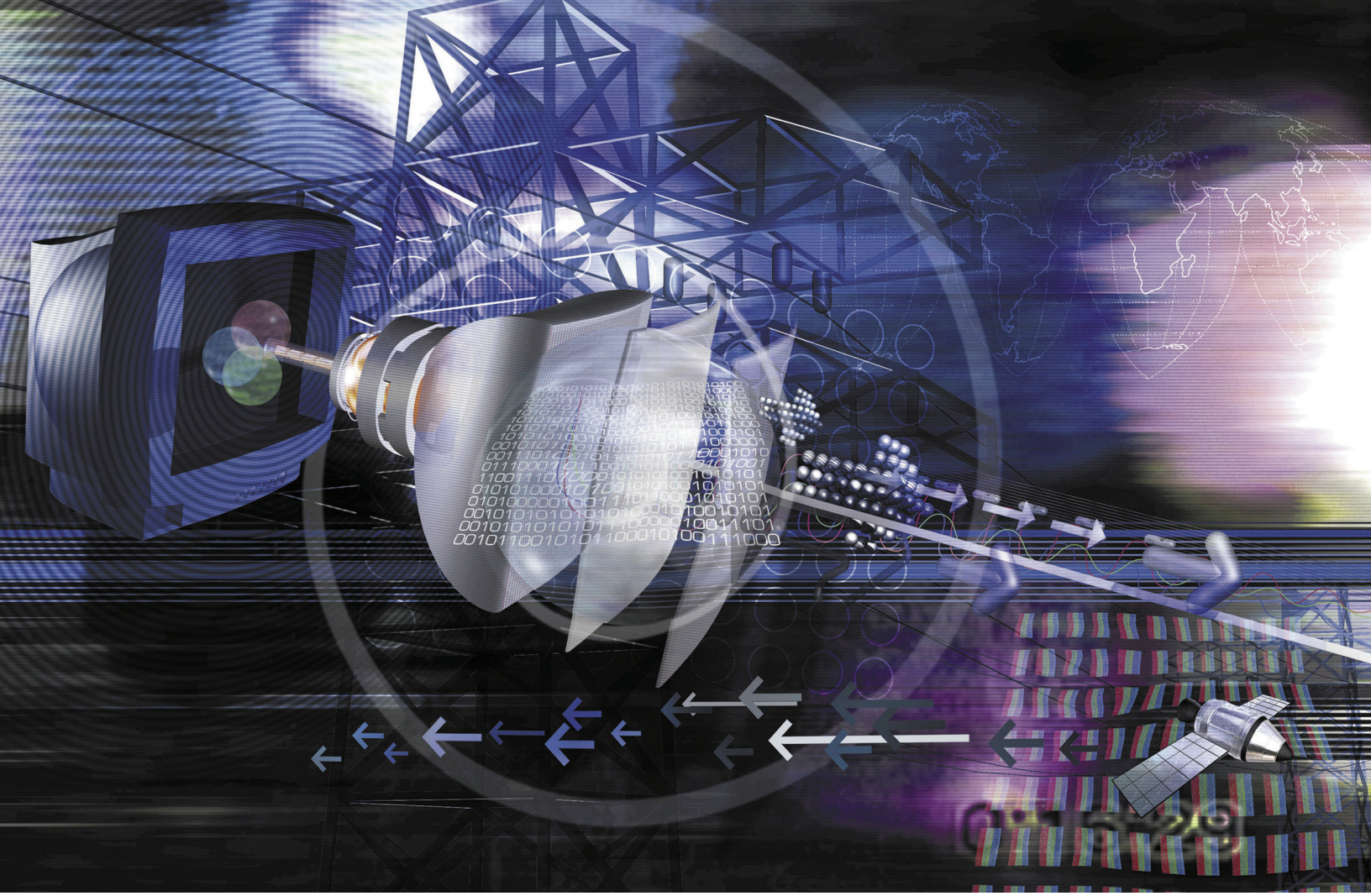

## Chapter Outline

1 Receiver Characteristics
2 AM Detection
3 Superheterodyne Receivers
4 Superheterodyne Tuning
5 Superheterodyne Analysis
6 Automatic Gain Control
7 AM Receiver Systems
8 Troubleshooting
9 Troubleshooting with Electronics Workbench™ Multisim

## Objectives

- Define the *sensitivity* and *selectivity* of a radio receiver
- Describe the operation of a diode detector in an AM receiver
- Sketch block diagrams for TRF and superheterodyne receivers
- Understand the generation of *image frequencies* and describe how to suppress them
- Recognize and analyze RF and IF amplifiers
- Describe the need for automatic gain control and show how it can be implemented
- Analyze the operation of a complete AM receiver system
- Perform a test analysis on the power levels (dBm) at each stage of an AM receiver system

# AMPLITUDE MODULATION RECEPTION




A Midland CB transceiver. (Courtesy of Midland Radio Corporation.)

## Key Terms

tuned radio frequency receiver
sensitivity
noise floor
selectivity
envelope detector
product detector
heterodyne detector
first detector
trimmer
padder capacitor
varactor diodes
varicap diodes
VVC diodes
image frequency
double conversion
cross-modulation
converters
first detectors
Schottky diode
self-excited mixer
autodyne mixer
auxiliary AGC diode
dynamic range
signal injection



# 1 Receiver Characteristics

If you were to envision a block diagram for a radio receiver, you would probably go through the following logical thought process:

1. The signal from the antenna is usually very small—therefore, amplification is necessary. This amplifier should have low-noise characteristics and should be tuned to accept only the desired carrier and sideband frequencies to avoid interference from other stations and to minimize the received noise. Recall that noise is proportional to bandwidth.
2. After sufficient amplification, a circuit to detect the intelligence from the radio frequency is required.
3. Following the detection of the intelligence, further amplification is necessary to give it sufficient power to drive a loudspeaker.

This logical train of thought leads to the block diagram shown in Figure 1. It consists of an RF amplifier, detector, and audio amplifier. The first radio receivers for broadcast AM took this form and are called **tuned radio frequency** or, more simply, **TRF receivers.** These receivers generally had three stages of RF amplification, with each stage preceded by a separate variable-tuned circuit. You can imagine the frustration experienced by the user when tuning to a new station. The three tuned circuits were all adjusted by separate variable capacitor controls. To receive a station required proper adjustment of all three, and a good deal of time and practice was necessary.

**Tuned Radio Frequency Receiver**
the most elementary receiver design, consisting of RF amplifier stages, a detector, and audio amplifier stages

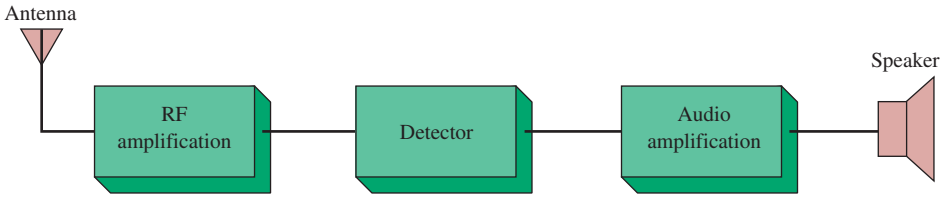


FIGURE 1 Simple radio receiver block diagram.

## Sensitivity and Selectivity

Two major characteristics of any receiver are its sensitivity and selectivity. A receiver's **sensitivity** may be defined as its ability to drive the output transducer (e.g., speaker) to an acceptable level. A more technical definition is the minimum input signal (usually expressed as a voltage) required to produce a specified output signal or sometimes just to provide a discernible output. The range of sensitivities for communication receivers varies from the millivolt region for low-cost AM receivers down to the nanovolt region for ultrasophisticated units for more exacting applications. In essence, a receiver's sensitivity is determined by the amount of gain provided and, more important, its noise characteristics. In general, the input signal must be somewhat greater than the noise at the receiver's input. This input noise is termed the **noise floor** of the receiver. It is not difficult to insert more gain in a radio, but getting noise figures below a certain level presents a more difficult challenge.

**Sensitivity**
the minimum input RF signal to a receiver required to produce a specified audio signal at output

**Noise Floor**
the baseline on a spectrum analyzer display, representing input noise of the system under test

**Selectivity** may be defined as the extent to which a receiver is capable of differentiating between the desired signal and other frequencies (unwanted radio signals and noise). A receiver can also be overly selective. For instance, on commercial broadcast AM, we have seen that the transmitted signal can include intelligence signals up to about a maximum of 15 kHz, which subsequently generates upper and lower sidebands extending 15 kHz above and below the carrier frequency. The total signal has a 30-kHz bandwidth. Optimum receiver selectivity is thus 30 kHz, but if a 5-kHz bandwidth were selected, the upper and lower sidebands would extend only 2.5 kHz above and below the carrier. The radio's output would suffer from a lack of the full possible fidelity because the output would include intelligence up to a maximum of 2.5 kHz. On the other hand, an excessive selectivity of 50 kHz results in the reception of unwanted adjacent radio signals and the additional external noise that is directly proportional to the bandwidth selected. Unfortunately, TRF receivers did suffer from selectivity problems, which led to their replacement by the superheterodyne receiver.

**Selectivity**
the extent to which a receiver can differentiate between the desired signal and other signals

As has been stated, broadcast AM can extend to about 30-kHz bandwidth. As a practical matter, however, many stations and receivers use a more limited bandwidth. The lost fidelity is often not detrimental because of the talk-show format of many AM stations. For instance, a 10-kHz bandwidth receiver provides audio output up to 5 kHz, which more than handles the human voice range. Musical reproduction with a 5-kHz maximum frequency is not high fidelity but is certainly adequate for casual listening.

## TRF Selectivity

Consider a standard AM broadcast band receiver that spans the frequency range from 550 to 1550 kHz. If the approximate center of 1000 kHz is considered, we can use the following equations to find that, for a desired 10-kHz BW, a $Q$ of 100 is required.

$$Q = \frac{f_r}{\text{BW}} \tag{1}$$
$$= \frac{1000 \text{ kHz}}{10 \text{ kHz}}$$
$$= 100$$

Now, since the $Q$ of a tuned circuit remains fairly constant as its capacitance is varied, a change to 1550 kHz will change the BW to 15.5 kHz.

$$Q = \frac{f_r}{\text{BW}} \tag{2}$$

Therefore,

$$\text{BW} = \frac{f_r}{Q}$$
$$= \frac{1550 \text{ kHz}}{100}$$
$$= 15.5 \text{ kHz}$$

The receiver's BW is now too large, and it will suffer from increased noise. On the other hand, the opposite problem is encountered at the lower end of the frequency range. At 550 kHz, the BW is 5.5 kHz.

$$\begin{aligned} \text{BW} &= \frac{f_r}{Q} \\ &= \frac{550 \text{ kHz}}{100} \\ &= 5.5 \text{ kHz} \end{aligned}$$

The fidelity of reception is now impaired. The maximum intelligence frequency possible is 5.5 kHz/2, or 2.75 kHz, instead of the full 5 kHz transmitted. This selectivity problem led to the general use of the superheterodyne receiver (see Section 3) in place of TRF designs.

## Example 1

*A TRF receiver is to be designed with a single tuned circuit using a 10-μH inductor.*

*(a) Calculate the capacitance range of the variable capacitor required to tune from 550 to 1550 kHz.*

*(b) The ideal 10-kHz BW is to occur at 1100 kHz. Determine the required Q.*

*(c) Calculate the BW of this receiver at 550 kHz and 1550 kHz.*

### Solution

(a) At 550 kHz, calculate $C$ using the following equation.

$$f_r = \frac{1}{2\pi\sqrt{LC}} \tag{3}$$

$$550 \text{ kHz} = \frac{1}{2\pi\sqrt{10\ \mu\text{H} \times C}}$$

$$C = 8.37 \text{ nF}$$

At 1550 kHz,

$$1550 \text{ kHz} = \frac{1}{2\pi\sqrt{10\ \mu\text{H} \times C}}$$

$$C = 1.06 \text{ nF}$$

Therefore, the required range of capacitance is from

$$1.06 \text{ to } 8.37 \text{ nF}$$

(b)
$$Q = \frac{f_r}{\text{BW}} \tag{4}$$

$$= \frac{1100 \text{ kHz}}{10 \text{ kHz}}$$

$$= 110$$

(c) At 1550 kHz,

$$\text{BW} = \frac{f_r}{Q}$$

$$= \frac{1550 \text{ kHz}}{110}$$

$$= 14.1 \text{ kHz}$$

At 550 kHz,

$$\text{BW} = \frac{550 \text{ kHz}}{110} = 5 \text{ kHz}$$



## 2 AM Detection

The process of detecting the intelligence out of the carrier and sidebands (the AM signal) has thus far been mentioned but not explained. In fact, the detection process can be easily accomplished. Recall our discussions about generating AM. We said if two different frequencies were passed through a nonlinear device, sum and difference components would be generated. The carrier and sidebands of the AM signal are separated in frequency by an amount equal to the intelligence frequency. If the AM signal is passed through a nonlinear device, difference frequencies between the carrier and sidebands will be generated and these frequencies are, in fact, the intelligence. It follows that passing the AM signal through a nonlinear device will provide detection, just as passing the carrier and intelligence through a nonlinear device enables AM generation.

Detection of amplitude-modulated signals requires a nonlinear electrical network. An ideal nonlinear curve for this is one that affects the positive half-cycle of the modulated wave differently than the negative half-cycles. This distorts an applied voltage wave of zero average value so that the average resultant current varies with the intelligence signal amplitude. The curve shown in Figure 2(a) is called an *ideal curve* because it is linear on each side of the operating point *P* and does not introduce harmonic frequencies.

When the input to an ideal nonlinear device is a carrier and its sidebands, the output contains the following frequencies:

1. The carrier frequency
2. The upper sideband
3. The lower sideband

} original components

4. A dc component
5. A frequency equal to the carrier minus the lower sideband and the upper sideband minus the carrier, which is the original signal frequency

The detector reproduces the signal frequency by producing a distortion of a desirable kind in its output. When the output of the detector is impressed upon a low-pass filter, the radio frequencies are suppressed and only the low-frequency intelligence signal and dc components are left. This is shown as the dashed average current curve in Figure 2(a).

In some practical detector circuits, the nearest approach to the ideal curve is the square-law curve shown in Figure 2(b). The output of a device using this curve contains, in addition to all the frequencies that were listed, the harmonics of each of these frequencies. The harmonics of radio frequencies can be filtered out, but the harmonics

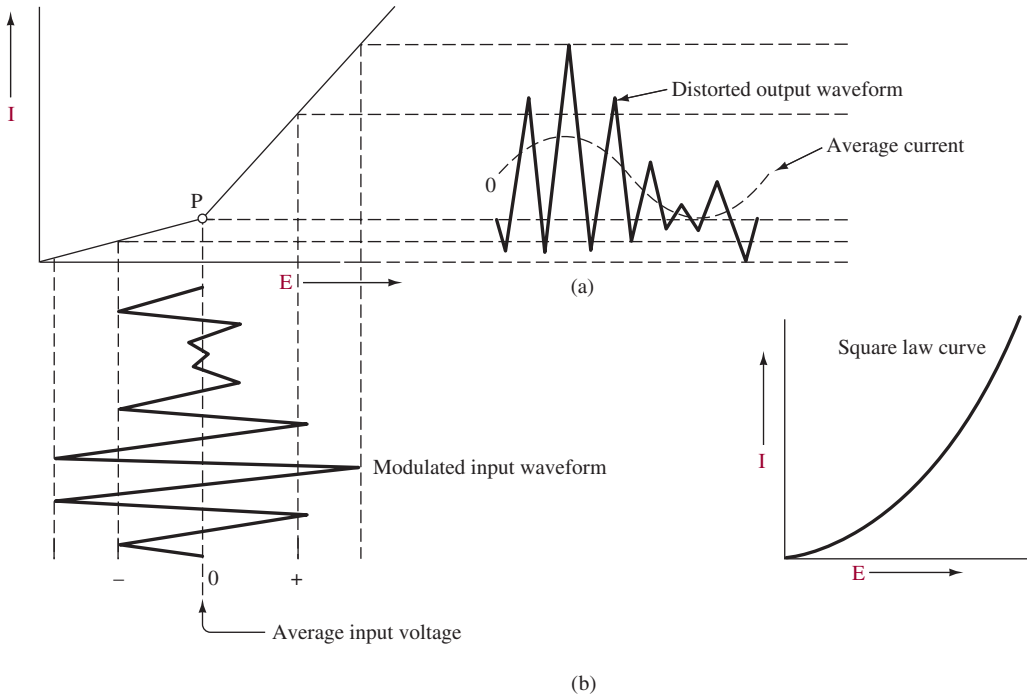


FIGURE 2 Nonlinear device used as a detector.

of the sum and difference frequencies, even though they produce an undesirable distortion, may have to be tolerated because they can be in the audio-frequency range.

## Diode Detector

One of the simplest and most effective types of detectors, and one with nearly an ideal nonlinear resistance characteristic, is the diode detector circuit shown in Figure 3(a). Notice the *I–V* curve in Figure 3(b). This is the type of curve on which the diode detector at (a) operates. The curved part of its response is the region of low current and indicates that for small signals the output of the detector will follow the square law. For input signals with large amplitudes, however, the output is essentially linear. Therefore, harmonic outputs are limited. The abrupt nonlinearity occurs for the negative half-cycle as shown in Figure 3(b).

The modulated carrier is introduced into the tuned circuit made up of $LC_1$ in Figure 3(a). The waveshape of the input to the diode is shown in Figure 3(c). Since the diode conducts only during half-cycles, this circuit removes all the negative half-cycles and gives the result shown in Figure 3(d). The average output is shown at (e). Although the average input voltage is zero, the average output voltage across *R* always varies above zero.

The low-pass filter, made up of capacitor $C_2$ and resistor *R*, removes the RF (carrier frequency), which, so far as the rest of the receiver is concerned, serves no useful purpose. Capacitor $C_2$ charges rapidly to the peak voltage through the small resistance of the conducting diode, but discharges slowly through the high resistance of *R*. The sizes of *R* and $C_2$ normally form a rather short time constant at the intelligence (audio) frequency and a very long time constant at the radio frequencies. The resultant output with $C_2$ in the circuit is a varying voltage that follows the peak variation of the modulated

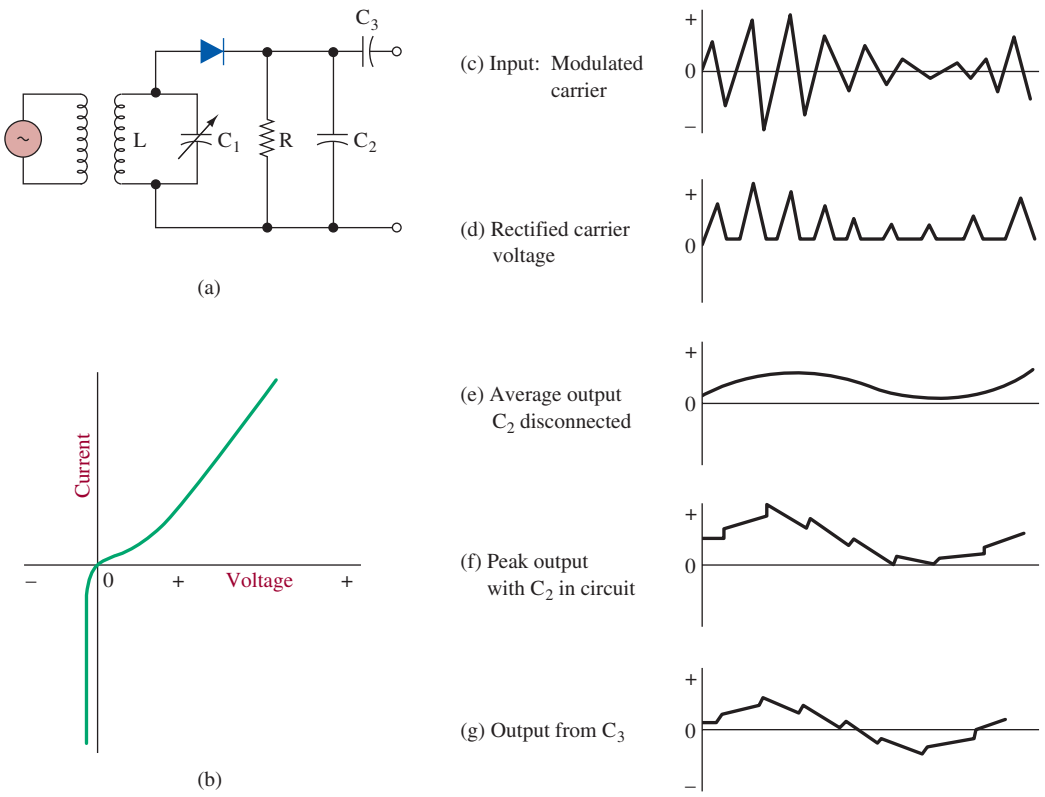


FIGURE 3 Diode detector.

carrier [see Figure 3(f)]. For this reason it is often termed an **envelope detector** circuit. The dc component produced by the detector circuit is removed by capacitor $C_3$, producing the ac voltage waveshape in Figure 3(g). In communications receivers, the dc component is often used for providing automatic volume (gain) control.

**Envelope Detector** another name for diode detector

The advantages of diode detectors are as follows:

1. They can handle relatively high power signals. There is no practical limit to the amplitude of the input signal.
2. Distortion levels are acceptable for most AM applications. Distortion decreases as the amplitude increases.
3. They are highly efficient. When properly designed, 90 percent efficiency is obtainable.
4. They develop a readily usable dc voltage for the automatic gain control circuits.

The disadvantages of the diode detectors are:

1. Power is absorbed from the tuned circuit by the diode circuit. This reduces the $Q$ and selectivity of the tuned input circuit.
2. No amplification occurs in a diode detector circuit.

## Detector Diode Types

In noncritical applications, the standard *pn* junction diode can be used. It is usually adequate for the LF, HF, and low VHF bands. Low-cost silicon switching diodes such as the 1N914 and 1N4148 are frequently used. For higher frequencies, point contact

diodes are often used. These diodes have the *pn* junction on the surface of the substrate and make contact to the *p*-type material via a small wire. The junction is very small, yielding very low capacitance that makes them useful for microwave operation up to 40 GHz. The commonly used point contact varieties are the 1N21, 1N23, and 1N34.

An important specification for detector diodes is voltage sensitivity. This is a measure of detector output per unit of RF input power. It is specified as V/mW or mV/$\mu$W at some specified dc bias current.

## Diagonal Clipping

Careful selection of component parts is necessary for obtaining optimum efficiency in diode detector circuits. One very important fact to consider is the value of the time constant $RC_2$, particularly in the case of pulse modulation. When a carrier modulated by a square pulse [Figure 4(b)] is applied to an ideal diode detector, the waveshape shown in Figure 4(c) is produced. Notice that for clarity, the amplitude of the wave at (c) is exaggerated in comparison to the high frequency carrier shown at (b).

If the time constant of $RC_2$ is too long compared to the period of the RF wave, several cycles are required to charge $C_2$, and the leading edge of the output pulse is sloped as shown in Figure 4(d). After the pulse passes by, the capacitor discharges slowly and the trailing edge is exponential rather than square, as desired. This phenomenon is often referred to as diagonal clipping. The diagonal clipping effect from a sine-wave intelligence signal is shown at (e). Notice that the detected sine wave at (e) is distorted. The excessive *RC* time constant did not allow the capacitor voltage to follow the full changes of the sine wave. On the other hand, if the time constant is too short, both the leading and trailing edges can be easily reproduced. However, the capacitor may discharge considerably between carrier cycles. This reduces the average amplitude of the pulse, leaving a sizable component of the carrier frequency in the output, as shown in Figure 4(f).

For these reasons the selection of the time constant is a compromise. The load resistor *R* must be large because the total input voltage is divided across *R* and the internal resistance of the diode when it is conducting. A large value of load resistance ensures that the greater part of this voltage is in the output, where desired. On the other hand, the load resistance must not be so high that capacitor $C_2$ becomes small enough to approximate the size of $C_1$ [Figure 4(a)], the internal junction capacitance of the diode. When this occurs, capacitor $C_2$ will try to discharge through $C_1$ during the nonconducting periods, which would reduce the amplitude of the detector output.

## Synchronous Detection

**Product Detector**
oscillator, mixer, and low-pass filter stage used to obtain the intelligence from an AM signal

**Heterodyne Detector**
another name for synchronous detector or product detector

Diode detectors are used in the vast majority of AM detection schemes. Since high fidelity is usually not an important aspect in AM, the distortion levels of several percentage points or more from a diode detector can be tolerated easily. In applications demanding greater performance, the use of a synchronous detector offers the following advantages:

1. Low distortion—well under 1 percent
2. Greater ability to follow fast-modulation waveforms, as in pulse-modulation or high-fidelity applications
3. The ability to provide gain instead of attenuation, as in diode detectors

Synchronous detectors are also called **product** or **heterodyne detectors.** The principle of operation involves mixing in a nonlinear fashion just as in AM generation.

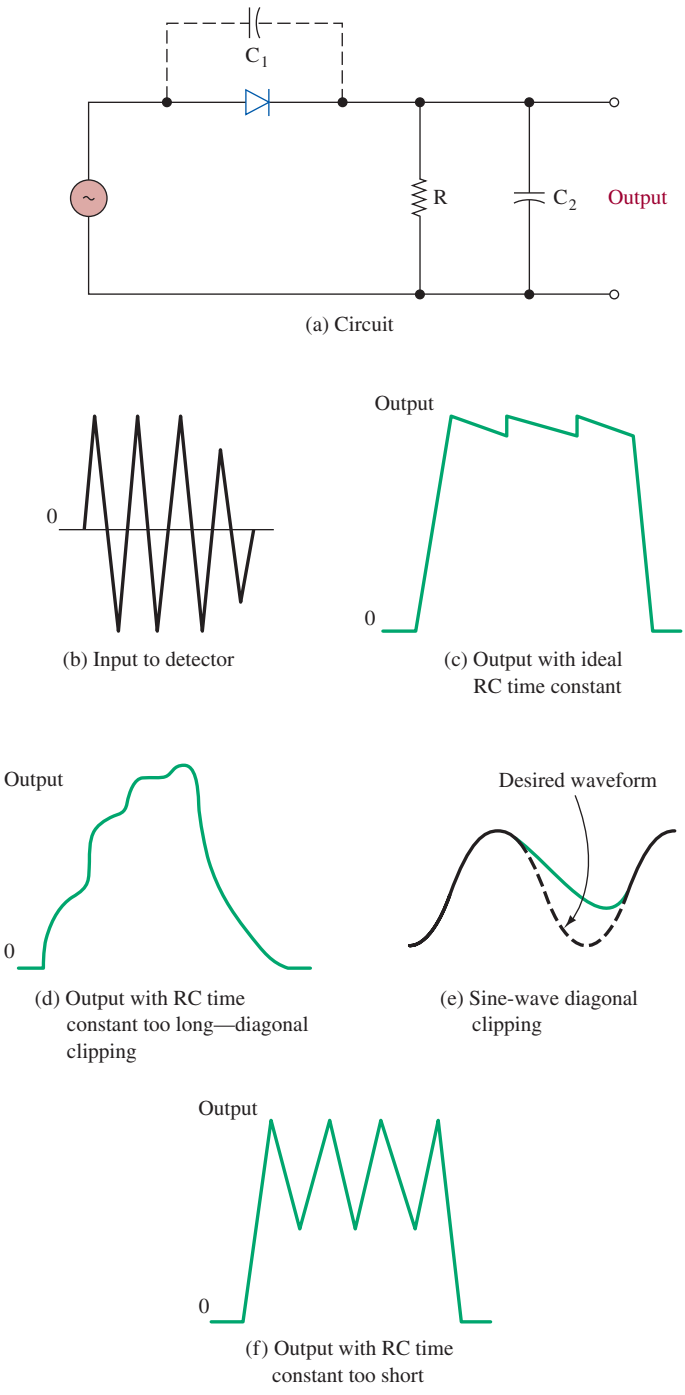


FIGURE 4 Diode detector component considerations. Dashed lines indicate average voltage during pulse.

Imagine receiving a transmission at 900 kHz. If it contained a 1-kHz tone, the reception consists of three components:

1. The carrier at 900 kHz
2. The usb at 901 kHz
3. The lsb at 899 kHz

If this AM waveform were mixed with an internally generated 900-kHz sine wave through a nonlinear device, a resulting difference frequency is 1 kHz—the desired output intelligence. Of course, a number of much higher sum frequencies are also generated, but they are easily filtered out by a low-pass filter. Detection has been achieved in a completely different fashion from that for the envelope detector (diode detection) discussed previously. A circuit commonly used for product detection is the balanced modulator. It is widely used in single-sideband (SSB) systems.

An Electronics Workbench™ Multisim implementation of a synchronous AM detector is provided in Figure 5(a). The AM signal feeds the Y input to the mixer circuit ($A_1$), and it is also fed through the high-gain limiter stage $A_2$. The high-gain limiter is used to limit the amplitude variations, leaving only the 900-kHz carrier signal. The mixer circuit outputs the sum and difference in the two input frequencies appearing on the X and Y input. The sum will be twice the AM carrier frequency plus the 1-kHz component, whereas the difference will be simply the intelligence frequency (1 kHz). Resistor $R_1$, Inductor $L_1$, and Capacitor $C_1$ form a low-pass filter with a cutoff frequency of about 1 kHz that is used to filter out the high-frequency components so only the intelligence frequency appears on the output.

The waveform of the AM input signal at Test Point 1 (TP1) is shown in Figure 5(b). This example is showing a 100 percent modulated AM waveform. The recovered 1-kHz signal is shown at TP2 in Figure 5(b).

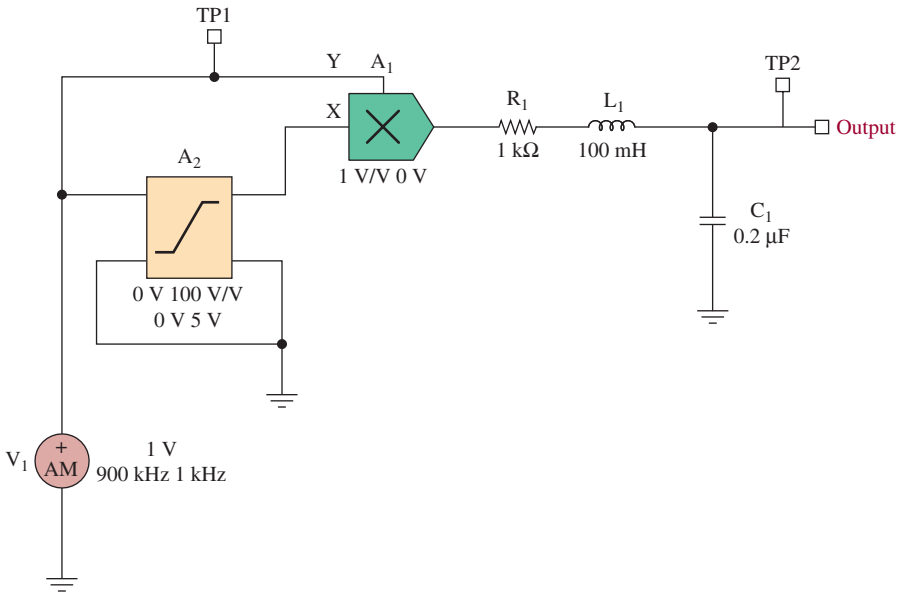


**FIGURE 5(a)** A synchronous AM detector circuit as implemented in Electronics Workbench™ Multisim.

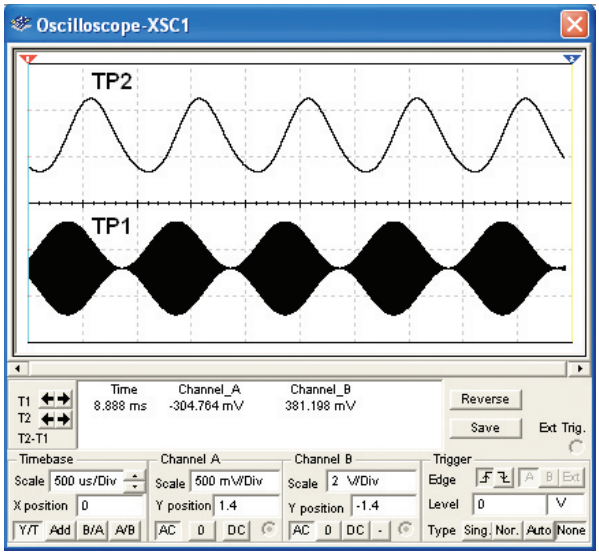


FIGURE 5(b) The waveforms obtained from TP1 and TP2 for the synchronous AM detector provided in Figure 5(a).



## 3 SUPERHETERODYNE RECEIVERS

The basic variable-selectivity problem in TRF systems led to the development and general usage of the superheterodyne receivers in the early 1930s. This basic receiver configuration is still dominant after all these years, an indication of its utility. A block diagram for a superheterodyne receiver is provided in Figure 6. The first stage is a standard RF amplifier that may or may not be required, depending on factors to be

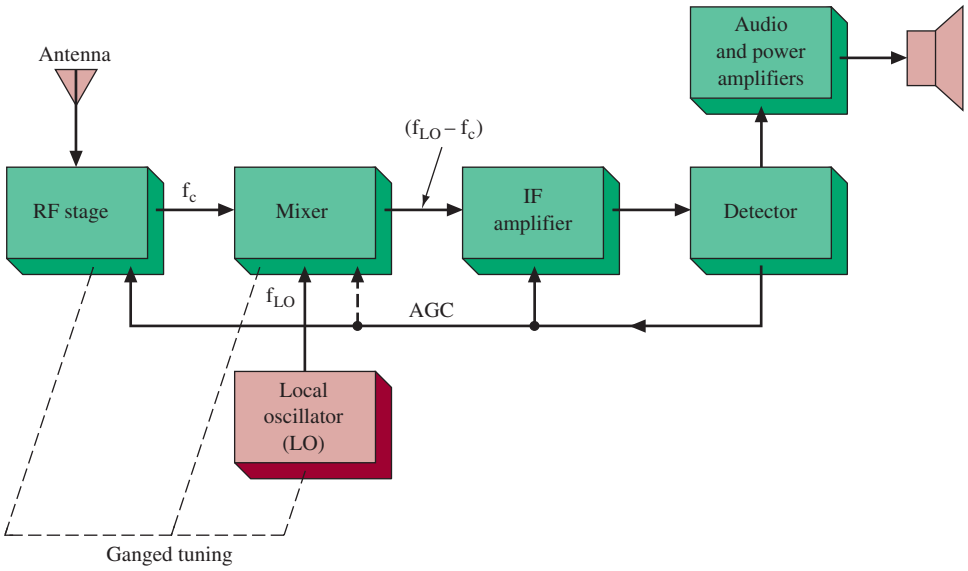


FIGURE 6 Superheterodyne receiver block diagram.

discussed later. The next stage is the mixer, which accepts two inputs, the output of the RF amplifier (or antenna input when an RF amplifier is omitted) and a steady sine wave from the local oscillator (LO). The mixer is yet another nonlinear device utilized in AM. Its function is to mix the AM signal with a sine wave to generate a new set of sum and difference frequencies. Its output, as will be shown, is an AM signal with a constant carrier frequency regardless of the transmitter's frequency. The next stage is the intermediate-frequency (IF) amplifier, which provides the bulk of radio-frequency signal amplification at a *fixed* frequency. This allows for a constant BW over the entire band of the receiver and is the key to the superior selectivity of the superheterodyne receiver. Additionally, since the IF frequency is usually lower than the RF, voltage gain of the signal is more easily attained at the IF frequency. Following the IF amplifiers is the detector, which extracts the intelligence from the radio signal. It is subsequently amplified by the audio amplifiers into the speaker. A dc level proportional to the received signal's strength is extracted from the detector stage and fed back to the IF amplifiers and sometimes to the mixer and/or the RF amplifier. This is the automatic gain control (AGC) level, which allows relatively constant receiver output for widely variable received signals. Detail on AGC is provided in Section 6.

## Frequency Conversion

It has been stated that the mixer performs a frequency conversion process. Consider the situation shown in Figure 7. The AM signal into the mixer is a 1000-kHz carrier that has been modulated by a 1-kHz sine wave, thus producing side frequencies at 999 kHz and 1001 kHz. The LO input is a 1455-kHz sine wave. The mixer, being a nonlinear device, will generate the following components:

1. Frequencies at all of the original inputs: 999 kHz, 1000 kHz, 1001 kHz, and 1455 kHz.
2. Sum and difference components of all the original inputs: 1455 kHz $\pm$ (999 kHz, 1000 kHz, and 1001 kHz). This means outputs at 2454 kHz, 2455 kHz, 2456 kHz, 454 kHz, 455 kHz, and 456 kHz.
3. Harmonics of all the frequency components listed in 1 and 2 and a dc component.

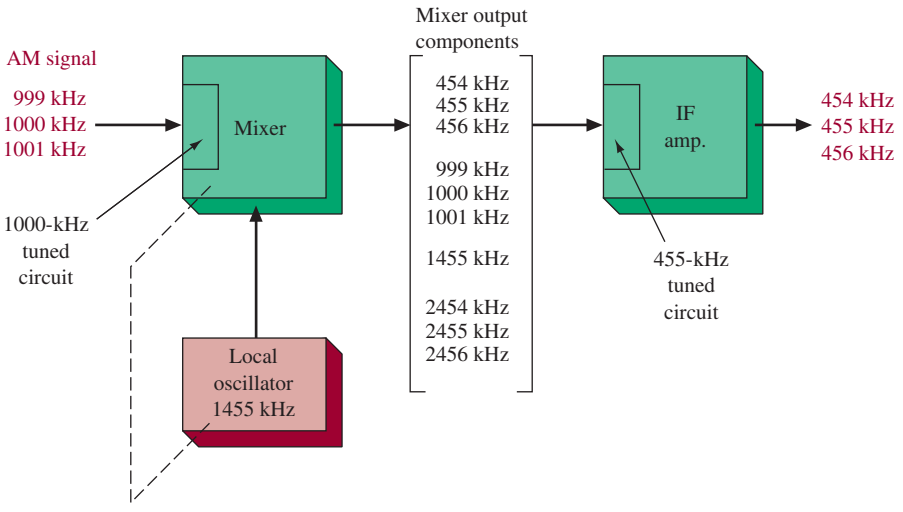


FIGURE 7 Frequency conversion process.

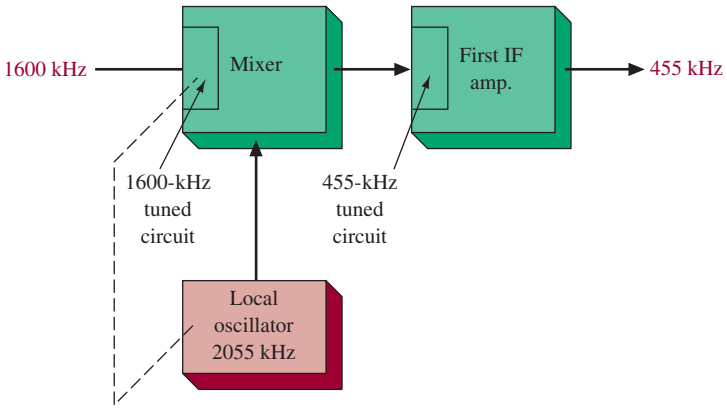


FIGURE 8 Frequency conversion.

The IF amplifier has a tuned circuit that accepts components only near 455 kHz, in this case 454 kHz, 455 kHz, and 456 kHz. Since the mixer maintains the same amplitude proportion that existed with the original AM signal input at 999 kHz, 1000 kHz, and 1001 kHz, the signal now passing through the IF amplifiers is a replica of the original AM signal. The only difference is that now its carrier frequency is 455 kHz. Its envelope is identical to that of the original AM signal. A frequency conversion has occurred that has translated the carrier from 1000 kHz to 455 kHz—a frequency intermediate to the original carrier and intelligence frequencies—which led to the terminology intermediate-frequency amplifier, or IF amplifier. Since the mixer and detector both have nonlinear characteristics, the mixer is often referred to as the **first detector.**

**First Detector**
the mixer stage in a superheterodyne receiver that mixes the RF signal with a local oscillator signal to form the intermediate frequency signal

## Tuned-Circuit Adjustment

Now consider the effect of changing the tuned circuit at the front end of the mixer to accept a station at 1600 kHz. This means a reduction in either its inductance or capacitance (usually the latter) to change its center frequency from 1000 kHz to 1600 kHz. If the capacitance in the local oscillator's tuned circuit were simultaneously reduced so that its frequency of oscillation went up by 600 kHz, the situation shown in Figure 8 would now exist. The mixer's output still contains a component at 455 kHz (among others), as in the previous case when we were tuned to a 1000-kHz station. Of course, the other frequency components at the output of the mixer are not accepted by the selective circuits in the IF amplifiers.

Thus, the key to superheterodyne operation is to make the LO frequency track with the circuit or circuits that are tuning the incoming radio signal so that their difference is a constant frequency (the IF). For a 455-kHz IF frequency, the most common case for broadcast AM receivers, this means the LO should always be at a frequency 455 kHz above the incoming carrier frequency. The receiver's front-end tuned circuits are usually made to track together by mechanically linking (ganging) the capacitors in these circuits on a common variable rotor assembly, as shown in Figure 9. Note that this ganged capacitor has three separate capacitor elements.

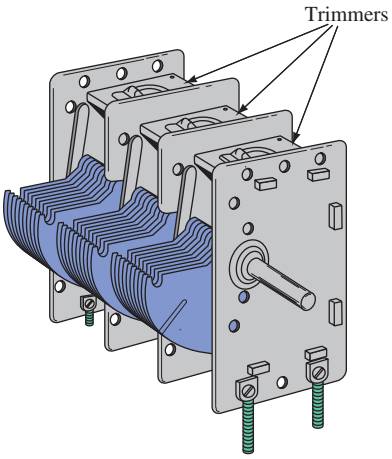


FIGURE 9 Variable ganged capacitor.



## 4 Superheterodyne Tuning

### Tracking

It is not possible to make a receiver track perfectly over an entire wide range of frequencies. The perfect situation occurs when the RF amplifier and mixer tuned circuits are exactly together and the LO is above these two by an amount exactly equal to the IF frequency. To obtain a practical degree of tracking, the following steps are employed:

**Trimmer**
small variable capacitance in parallel with each section of a ganged capacitor

**Padder Capacitor**
small variable capacitor in series with each ganged tuning capacitor in a superheterodyne receiver to provide near-perfect tracking at the low end of the tuning range

1. A small variable capacitance in parallel with each section of the ganged capacitor, called the **trimmer,** is adjusted for proper operation at the highest frequency. The trimmer capacitors are shown in Figure 9. The highest frequency requires the main capacitor to be at its minimum value (i.e., the plates all the way open). The trimmers are then adjusted to balance out the remaining stray capacitances to provide perfect tracking at the highest frequency.
2. At the lowest frequency, when the ganged capacitors are fully meshed (maximum value), a small variable capacitor known as the **padder capacitor** is put in series with the tank inductor. The padders are adjusted to provide tracking at the low frequency in the band.
3. The final adjustment is made at midfrequency by slight adjustment of the inductance in each tank.

The curve in Figure 10(a) shows that performing the steps above, and then rechecking them once again to allow for interaction effects, provides nearly perfect tracking at three points. The minor imperfections between these points are generally of an acceptable nature. Figure 10(b) shows the circuit for each tank circuit and summarizes the adjustment procedure.

### Electronic Tuning

The bulk and cost of ganged capacitors have led to their gradual replacement by a technique loosely called electronic tuning. The majority of new designs use electronic frequency synthesis. Another electronic method relies on the capacitance offered by a

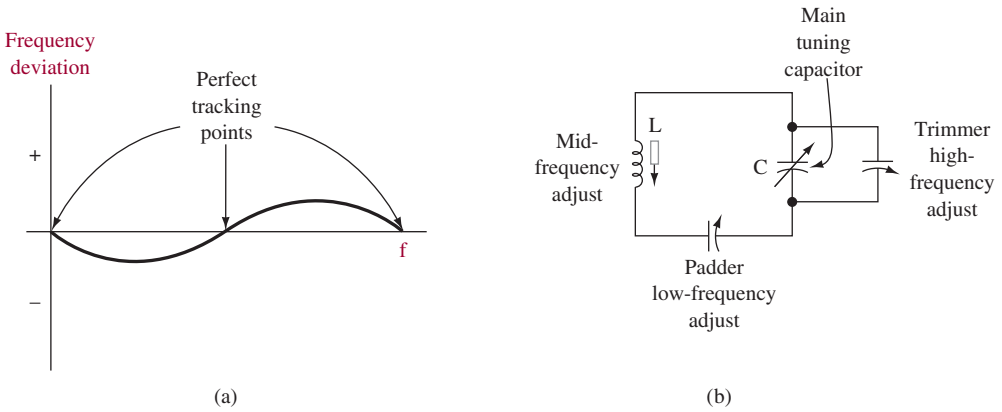


FIGURE 10 Tracking considerations.

reverse-biased diode. Since this capacitance varies with the amount of reverse bias, a potentiometer can be used to provide the variable capacitance required for tuning. Diodes that have been specifically fabricated to enhance this variable capacitance versus reverse bias characteristic are referred to as **varactor diodes, varicap diodes,** or **VVC diodes.** Figure 11 shows the two generally used symbols for these diodes and a typical capacitance versus reverse bias characteristic.

**Varactor Diodes**
having small internal capacitance that varies as a function of their reverse bias voltage

**Varicap Diodes**
another name for varactor diodes

**VVC Diodes**
another name for varactor or varicap diodes

The amount of capacitance exhibited by a reverse-biased silicon diode, $C_d$, can be approximated as

$$C_d = \frac{C_0}{(1 + 2|V_R|)^{\frac{1}{2}}} \tag{5}$$

where $C_0$ = diode capacitance at zero bias
$V_R$ = diode reverse bias voltage




Trimmer capacitor. (Courtesy of Voltronics Corporation.)

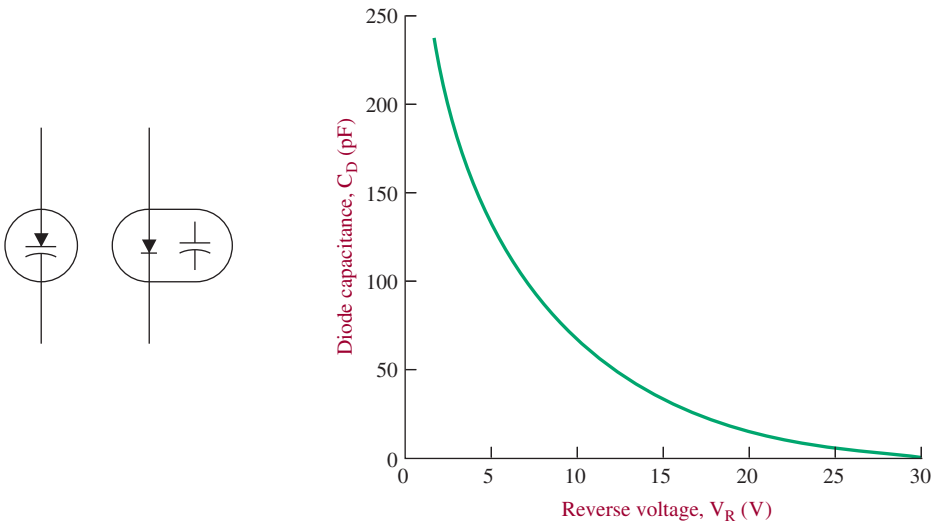


FIGURE 11 Varactor diode symbols and *C/V* characteristic.

The use of Equation (1) allows the designer to determine accurately the amount of reverse bias needed to provide the necessary tuning range. The varactor diode can also be used to generate FM.

Figure 12 shows the front end of a broadcast-band receiver. It does not incorporate an RF amplifier, and $Q_1$ performs the dual function of mixer and local oscillator. The varactor diode $D_1$ provides the variable capacitance necessary to tune the radio signal from the antenna while $D_2$ allows for the variable LO frequency.

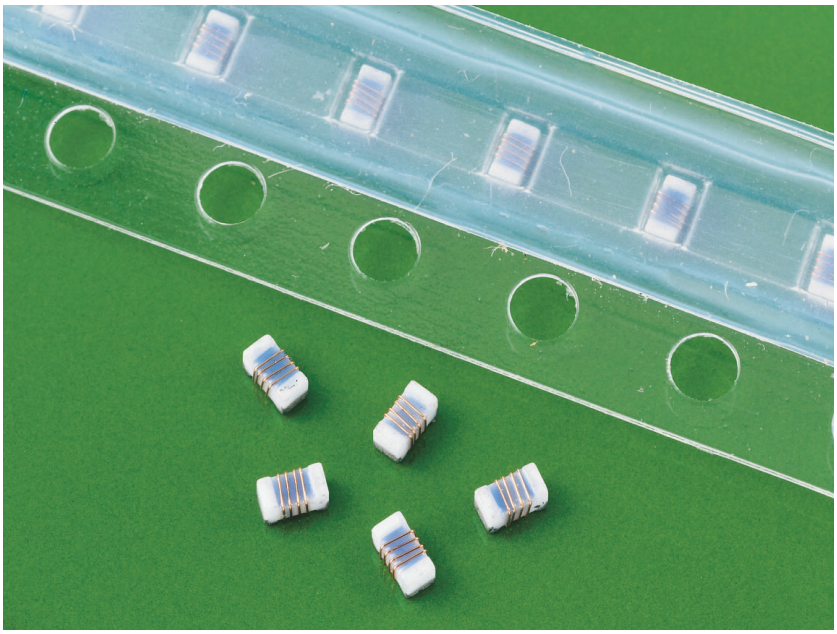

RF inductors. (Courtesy of Coilcraft, Inc., Cary, Illinois.)

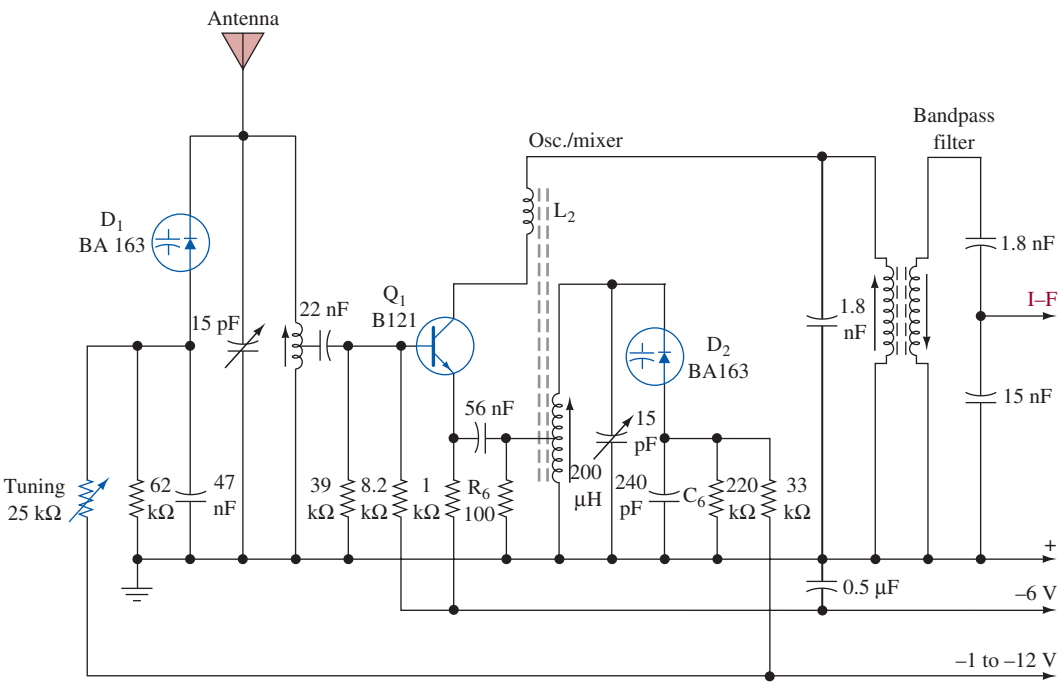


FIGURE 12 Broadcast-band AM receiver front end with electronic tuning.

The −1- to −12-V supply comes from the tuning potentiometer and provides the necessary variable reverse voltage for both varactor diodes. The matched diode characteristics required for good tracking often lead to the use of varactor diodes fabricated on a common silicon chip and provided in a single package.



## 5 Superheterodyne Analysis

### Image Frequency

The superheterodyne receiver has been shown to have that one great advantage over the TRF—constant selectivity over a wide range of received frequencies. This was shown to be true since the bulk of the amplification in a superheterodyne receiver occurs in the IF amplifiers at a fixed frequency, and this allows for relatively simple and yet highly effective frequency selective circuits. A disadvantage does exist, however, other than the obvious increase in complexity. The frequency conversion process performed by the mixer–oscillator combination sometimes will allow a station other than the desired one to be fed into the IF. Consider a receiver tuned to receive a 20-MHz station that uses a 1-MHz IF. The LO would, in this case, be at 21 MHz to generate a 1-MHz frequency component at the mixer output. This situation is illustrated in Figure 13. If an undesired station at 22 MHz were also on the air, it is possible for it also to get into the mixer. Even though the tuned circuit at the mixer's front end is "selecting" a center frequency of 20 MHz, a look at its response curve in Figure 13 shows that it will not fully attenuate the undesired station at 22 MHz. As soon as the 22-MHz signal is fed into the mixer, we have a problem. It mixes with the 21-MHz LO

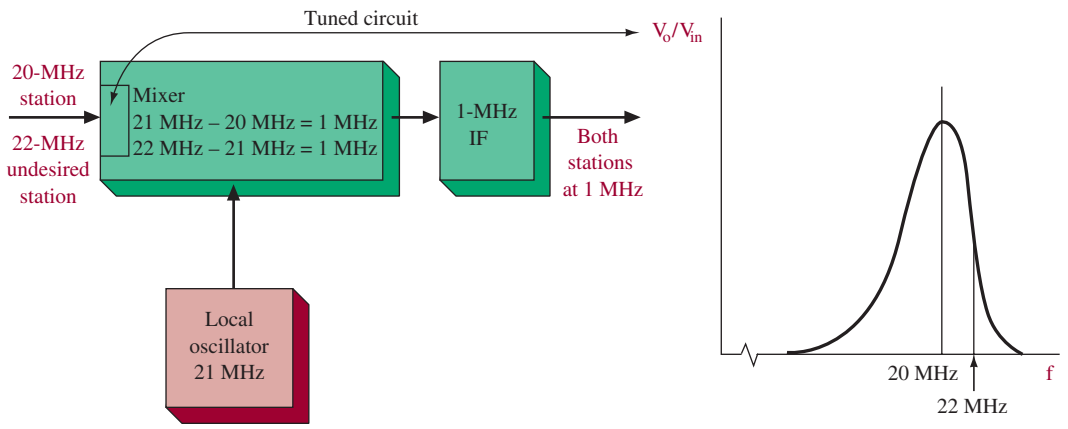


FIGURE 13 Image frequency illustration.

signal and one of the components produced is 22 MHz − 21 MHz = 1 MHz—the IF frequency! Thus, we now have a desired 20-MHz station and an undesired 22-MHz station, which both look correct to the IF. Depending on the strength of the undesired station, it can either interfere with or even completely override the desired station.

**Example 2**

*Determine the image frequency for a standard broadcast band receiver using a 455-kHz IF and tuned to a station at 620 kHz.*

**Solution**

The first step is to determine the frequency of the LO. The LO frequency minus the desired station's frequency of 620 kHz should equal the IF of 455 kHz. Hence,

$$\begin{aligned} \text{LO} - 620\ \text{kHz} &= 455\ \text{kHz} \\ \text{LO} &= 620\ \text{kHz} + 455\ \text{kHz} \\ &= 1075\ \text{kHz} \end{aligned}$$

Now determine what other frequency, when mixed with 1075 kHz, yields an output component at 455 kHz.

$$\begin{aligned} X - 1075\ \text{kHz} &= 455\ \text{kHz} \\ X &= 1075\ \text{kHz} + 455\ \text{kHz} \\ &= 1530\ \text{kHz} \end{aligned}$$

Thus, 1530 kHz is the image frequency in this situation.

**Image Frequency**
undesired input frequency in a superheterodyne receiver that produces the same intermediate frequency as the desired input signal

In the preceding discussion, the undesired received signal is called the **image frequency.** Designing superheterodyne receivers with a high degree of image frequency rejection is obviously an important consideration.

Image frequency rejection on the standard broadcast band is not a major problem. A glance at Figure 14 serves to illustrate this point. This tuned circuit at the mixer's input comes fairly close to fully attenuating the image frequency, in this case, since 1530 kHz is so far away from the tuned circuit's center frequency of 620 kHz. Unfortunately, this situation is not so easy to attain at the higher frequencies

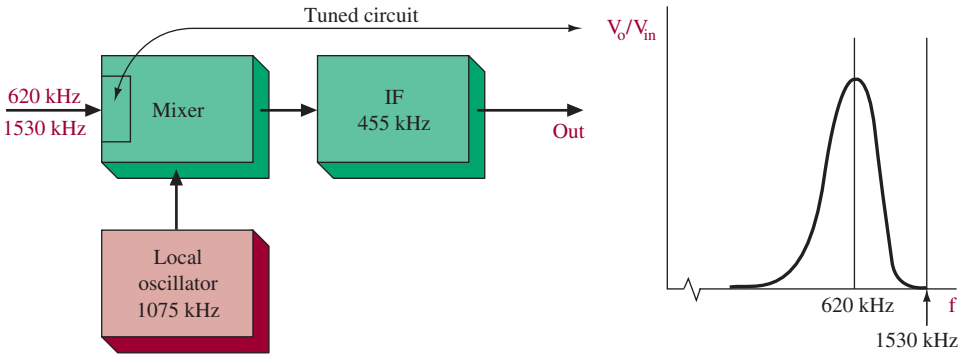


FIGURE 14 Image frequency not a problem.

used by many communication receivers. In these cases, a technique known as **double conversion** is employed to solve the image frequency problems.

**Double Conversion** superheterodyne receiver design that has two separate mixers, local oscillators, and intermediate frequencies to avoid image frequency problems

The use of an RF amplifier with its own input tuned circuit also helps to minimize this problem. Now the image frequency must pass through two tuned circuits (tuned to the desired frequency) before it is mixed. These tuned circuits at the input of the RF and mixer stages obviously serve to attenuate the image frequency to a greater extent than can the single tuned circuit in receivers without an RF stage.

## RF Amplifiers

The use of RF amplifiers in superheterodyne receivers varies from none in undemanding applications up to three or even four stages in sophisticated communication receivers. Even inexpensive AM broadcast receivers not having an RF amplifier do contain an RF section—the tuned circuit at the mixer's input. The major benefits of using RF amplification are the following:

1. Improved image frequency rejection
2. More gain and thus better sensitivity
3. Improved noise characteristics

The first two are self-explanatory at this point, but the last advantage requires further elaboration. Mixer stages require devices to be operated in a nonlinear area to generate the required difference frequency at their output. This process is inherently more noisy (i.e., higher NF) than normal class A linear bias. The use of RF amplification stages to bring the signal up to appreciable levels minimizes the effect of mixer noise.

The RF amplifier usually employs an FET as its active component. While BJTs certainly can be utilized, the following advantages of FETs have led to their general usage in RF amplifiers.

1. Their high input impedance does not "load" down the $Q$ of the tuned circuit preceding the FET. It thus serves to keep the selectivity at the highest possible level.
2. The availability of dual-gate FETs provides an isolated injection point for the AGC signal.
3. Their input/output square-law relationship allows for lower distortion levels.

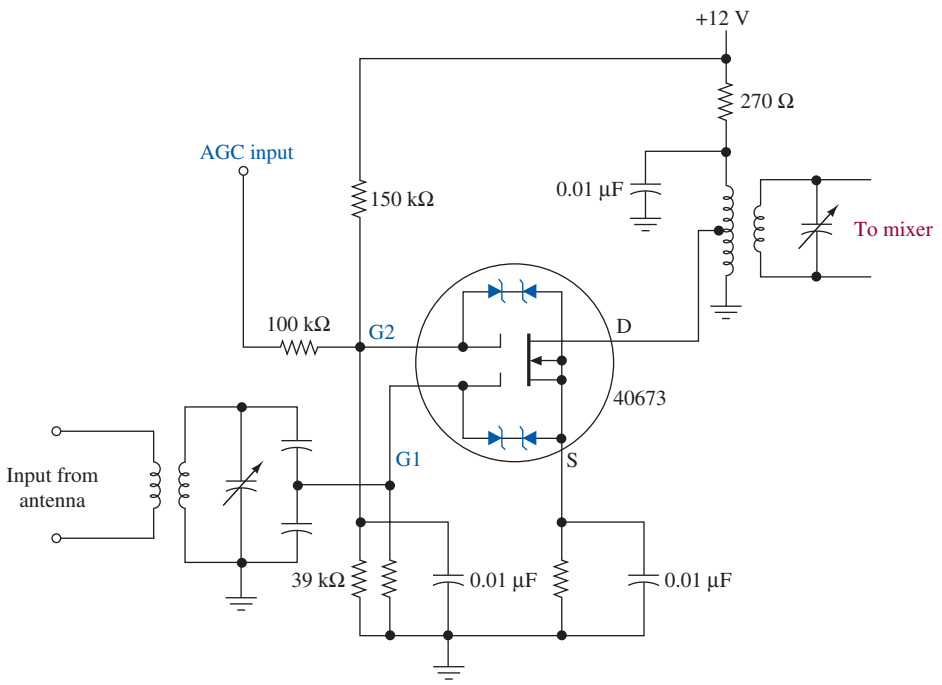


FIGURE 15 Dual-gate MOSFET RF amplifier.

**Cross-Modulation**
distortion that results from undesired mixer outputs

The distortion referred to in the last item is called **cross-modulation**.

A typical MOSFET RF amplifier stage is shown in Figure 15. It is a dual-gate unit, with the AGC level applied to gate 2 to provide for automatically variable gain. The received antenna signal is fed via a tuned coupling circuit to gate 1. The gate 1 and output drain connections are tapped down on their respective coupling networks, which keeps the device from self-oscillation without the need for a neutralizing capacitor. Notice the built-in transient protection shown within the symbol for the 40673 MOSFET. Zener diodes between the gates and source/substrate connections provide protection from up to 10-V p-p transient voltages. This is a valuable safeguard because of the extreme fragility of the MOSFET gate/channel junction.

## Mixer/LO

The frequency conversion accomplished by the mixer/LO combination can be accomplished in a number of ways. The circuits shown in Figure 16 illustrate some of the possibilities. They all make use of a device's nonlinearity to generate sum and difference frequencies between the RF and local oscillator signals. This process generates output components at the IF frequency. Mixers are also referred to as **converters** and **first detectors.**

**Converters**
another name for mixers

**First Detectors**
another name for mixers

The most basic mixer involves using a single diode to provide the required nonlinearity for generating sum and difference frequencies. This is shown in Figure 16(a).

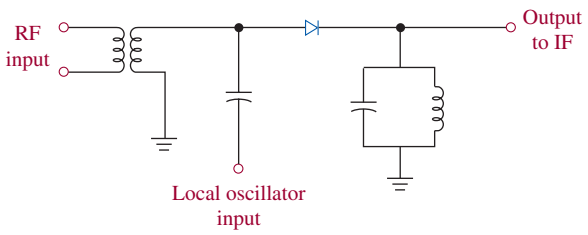


(a)

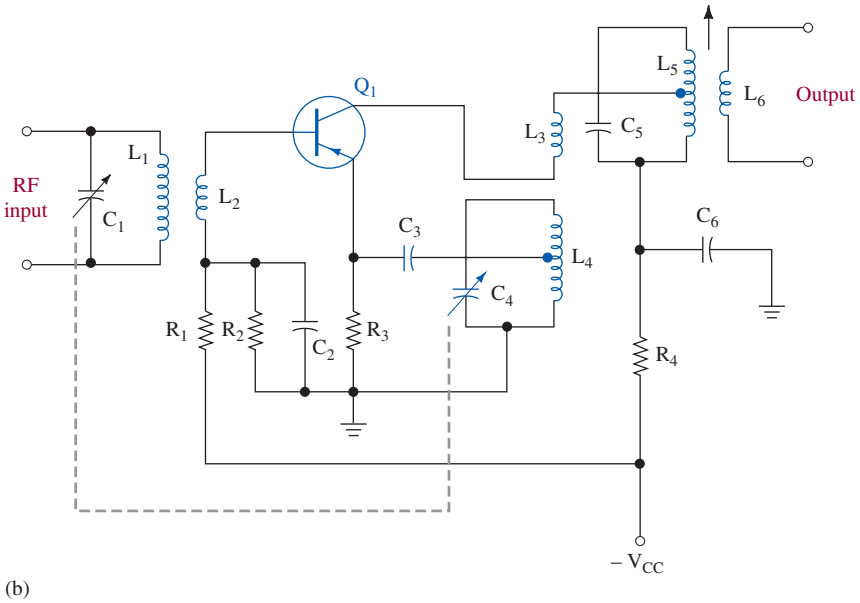


(b)

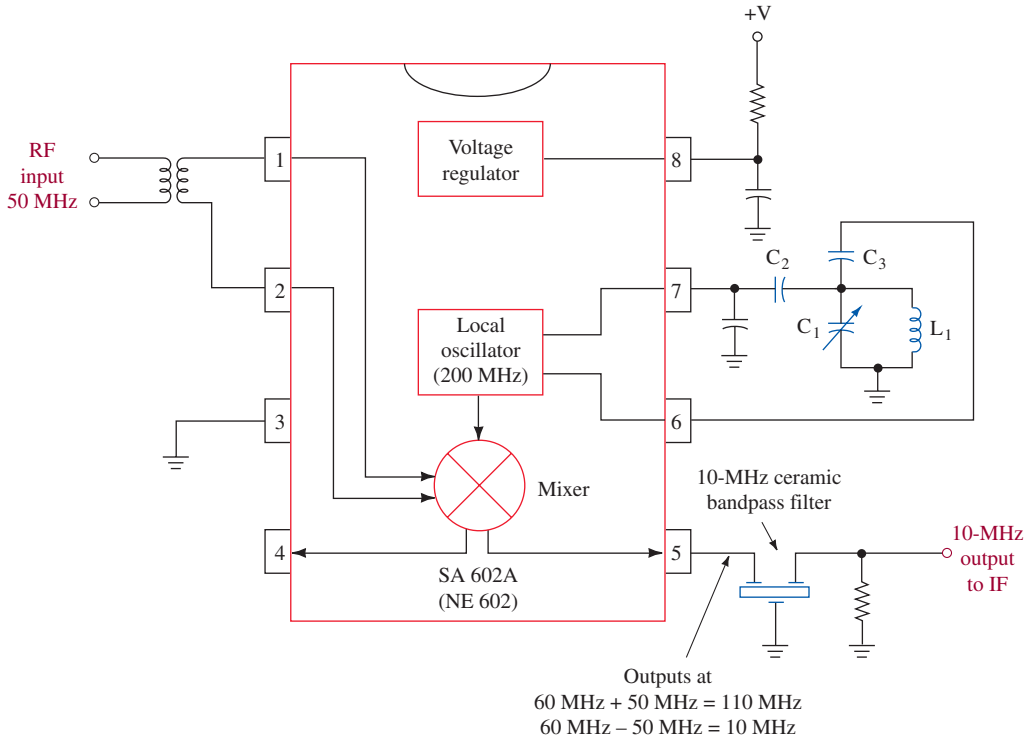


(c)

FIGURE 16 Typical mixer circuits.

**Schottky Diode**
specially fabricated majority carrier device formed from a metal-semiconductor interface, with extremely low junction capacitance

**Self-Excited Mixer**
single stage in a superheterodyne receiver that creates the LO signal and mixes it with the applied RF signal to form the IF signal

**Autodyne Mixer**
another name for self-excited mixer

The *LC* circuit at the output is tuned to the desired IF and attenuates all the other generated frequencies. Diode mixers are especially useful at the higher frequency ranges above 500 MHz. Although they don't offer the gain of transistorized mixers, operation at these frequencies is economically possible by using **Schottky diodes.** The Schottky diode is a specially fabricated device formed from a metal-semiconductor interface. Because the diode is not made from a *pn* junction, it is a majority carrier device and offers an extremely low junction capacitance. This makes it useful up to frequencies of 100 GHz!

The circuit shown in Figure 16(b) is a **self-excited mixer** because a single device does the mixing and generates the LO frequency. Self-excited mixers are sometimes referred to as **autodyne mixers.** The oscillator-tuned circuit of $C_4$ and $L_4$ provides a positive feedback signal to maintain oscillation via coil $L_3$, which is magnetically coupled to $L_4$. The oscillator signal is injected into $Q_1$'s emitter via $C_3$ and the RF signal into its base via $L_1$–$L_2$ transformer action. The "mixed" output at $Q_1$'s collector is fed to the $C_5$–$L_5$ tank circuit, which tunes in the desired frequency for the IF amplifiers. Recall that mixing signals through a nonlinear device generates many frequency components; the tuned circuit is used to select the desired ones for the IF amplifiers. Further detail on this circuit is provided in the troubleshooting section of this chapter (Section 8).

A widely used IC mixer is shown in Figure 16(c). The Philips SA602A (NE602) IC contains a transistorized mixer and an *npn* transistor that generates the local oscillator signal based on the frequency-selective components connected between pins 6 and 7. The $L_1$, $C_1$ combination is tuned to the desired LO frequency but a crystal could be substituted if better precision is desired. The $C_2$, $C_3$ combination is used to form a Colpitts oscillator with the internal oscillator transistor. The oscillator frequency can be set up to 200 MHz. Notice the output at pin 5 that is fed to a ceramic bandpass filter. This type of filter, which is similar to crystals used as filters, is a commonly used alternative to *LC* filters. This versatile IC mixer can be used at RF input frequencies up to 500 MHz.

## IF Amplifiers

The IF amplifiers provide the bulk of a receiver's gain (and thus are a major influence on its sensitivity) and selectivity characteristics. An IF amplifier is not a whole lot different from an RF stage except it operates at a fixed frequency. This allows the use of fixed double-tuned inductively coupled circuits, which in turn allow for the sharply defined bandpass response characteristic of superheterodyne receivers.

The number of IF stages in any given receiver varies, but from two to four is typical. Some typical IF amplifiers are shown in Figure 17. The circuit at (a) uses the 40673 dual-gate MOSFET while the other two use LICs specially made for IF amplifier applications. Notice the double-tuned LC circuits at the input and output of all three circuits. They are shown within dashed lines to indicate they are one complete assembly. They can be economically purchased for all common IF frequencies and have a variable slug in the transformer core for fine tuning their center frequency. All three of the circuits have provision for the AGC level. Not all receivers utilize AGC to control the gain of mixer and/or RF stages, but they invariably do control the gain of IF stages.

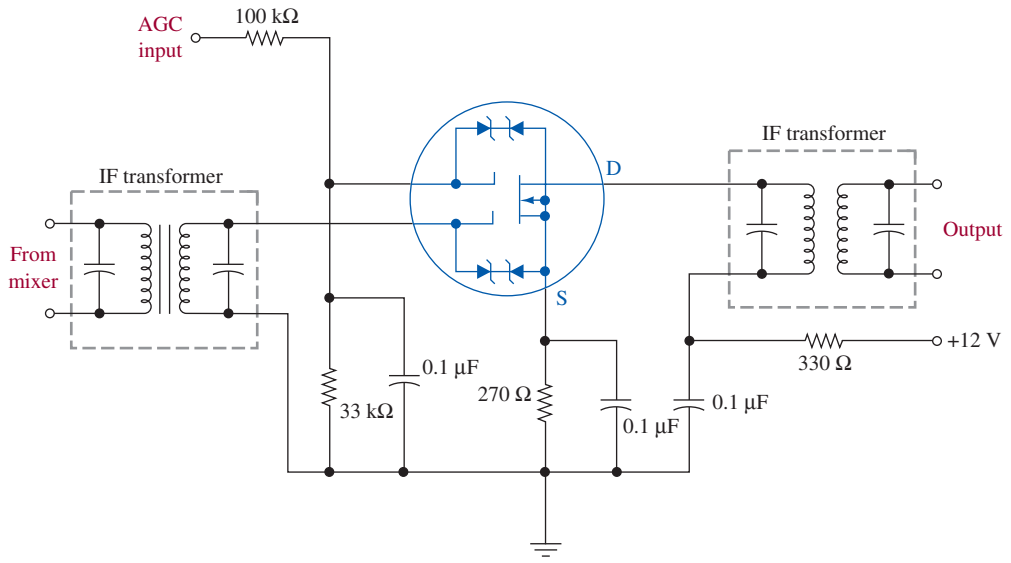


(a)

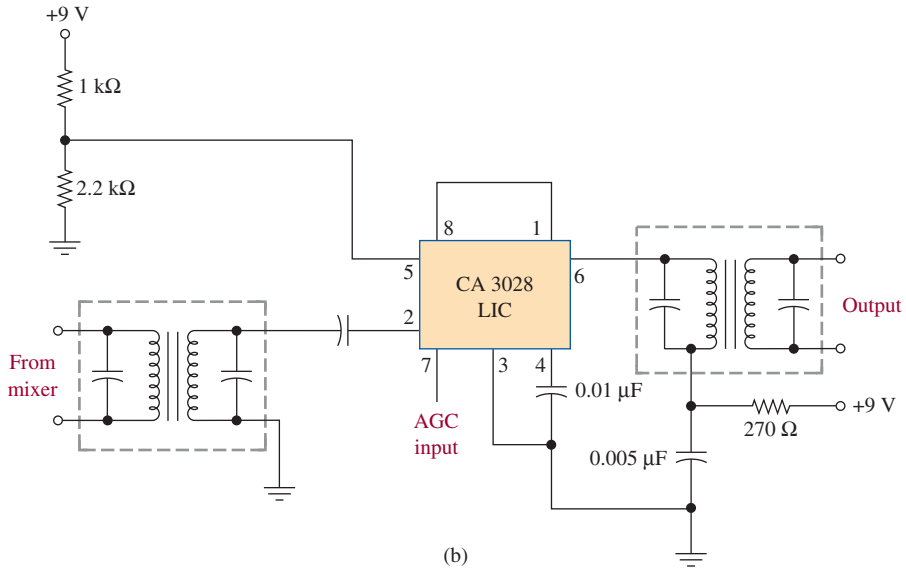


(b)

*(Continued)*

**FIGURE 17** Typical IF amplifiers.

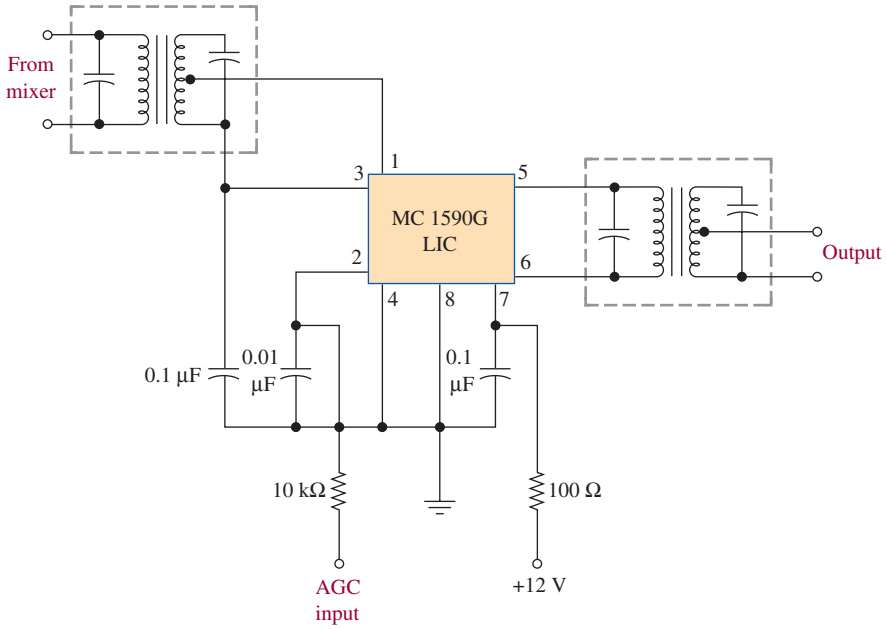


FIGURE 17 *(Continued)*



## 6 Automatic Gain Control

The purpose of automatic gain control (AGC) has already been explained. Without this function, a receiver's usefulness is seriously impaired. The following list gives some of the problems that would be encountered in a receiver without this provision:

1. Tuning the receiver would be a nightmare. To avoid missing the weak stations, you would have the volume control (in the non-AGC set) turned way up. As you tuned to a strong station, you would probably blow out your speaker, whereas a weak station might not be audible.
2. The received signal from any given station is constantly changing as a result of changing weather and ionospheric conditions. The AGC allows you to listen to a station without constantly monitoring the volume control.
3. Many radio receivers are utilized under mobile conditions. For instance, a standard broadcast AM car radio would be almost unusable without a good AGC to compensate for the signal variation in different locations.

### Obtaining the AGC Level

Most AGC systems obtain the AGC level just following the detector. Recall that following the detector diode, an *RC* filter removes the high frequency but hopefully leaves the low-frequency envelope intact. By simply increasing that *RC* time constant, a slowly varying dc level is obtained. The dc level changes with variations in the strength of the overall received signal.

Figure 18(a) shows the output from a diode detector with no filtering. In this case, the output is simply the AM waveform with the positive portion rectified out for two different levels of received signal into the diode. At (b), the addition of a filter has provided the two different envelope levels while filtering out the high-frequency content. These signals correspond to an undesired change in volume of two different received stations. At (c), a much longer time constant filter has actually

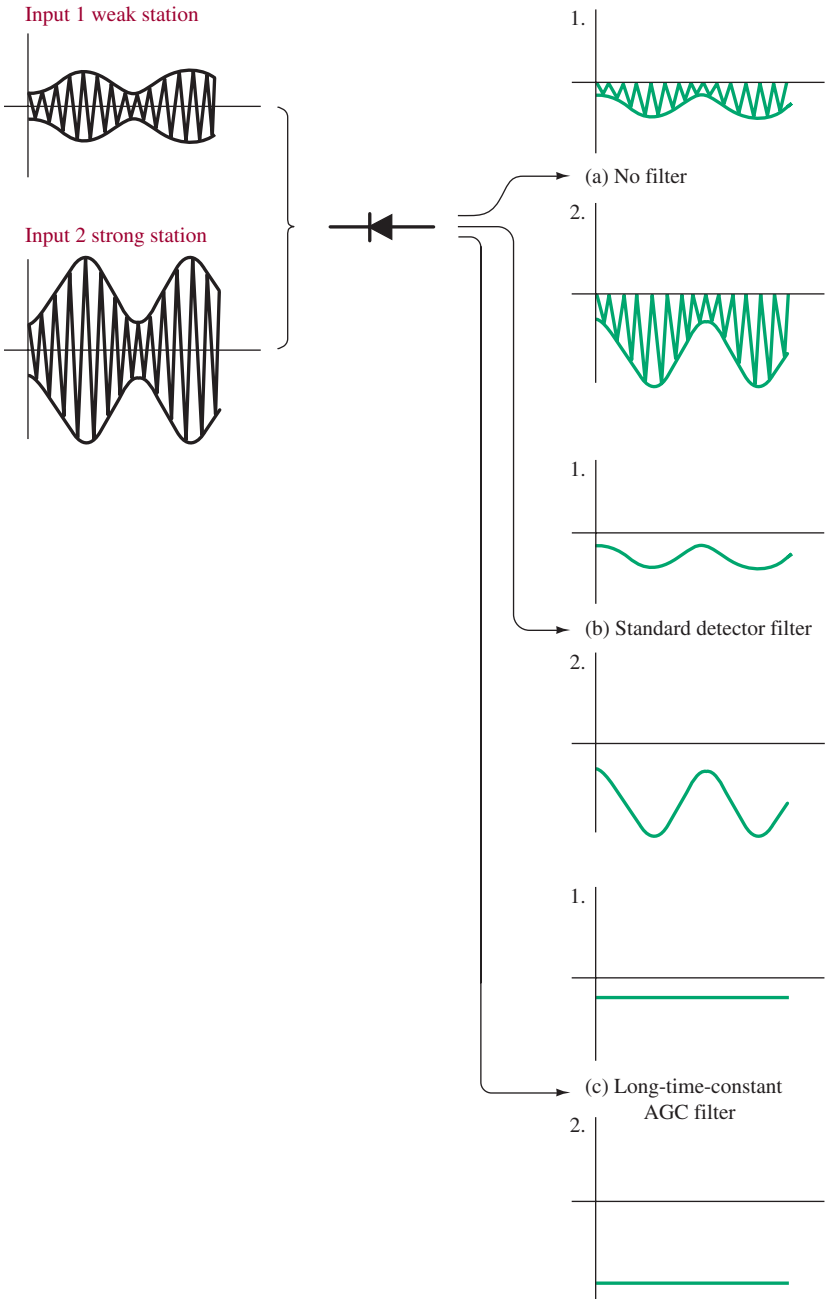


FIGURE 18 Development of AGC voltage.

filtered the output into a dc level. Notice that the dc level changes, however, with the two different levels of input signal. This is a typical AGC level that is subsequently fed back to control the gain of IF stages and/or the mixer and RF stages.

In this case, the larger negative dc level at $C_2$ would cause the receiver's gain to be decreased so that the ultimate speaker output is roughly the same for either the weak or strong station. It is important that the AGC time constant be long enough so that desired radio signal level changes that constantly occur do *not* cause a change in receiver gain. The AGC should respond only to average signal strength changes, and as such usually has a time constant of about a full second.

## Controlling the Gain of a Transistor

Figure 19 illustrates a method whereby the variable dc AGC level can be used to control the gain of a common emitter (CE) transistor amplifier stage. In the case of a strong received station, the AGC voltage developed across the AGC filter capacitor ($C_{AGC}$) is a large negative value that subsequently lowers the forward bias on $Q_1$. It causes more dc current to be drawn through $R_2$, and hence less is available for the base of $Q_1$, since $R_1$, which supplies current for both, can supply only a relatively constant amount. The voltage gain of a CE stage with an emitter bypass capacitor ($C_E$) is nearly directly proportional to dc bias current, and therefore the strong station reduces the gain of $Q_1$. The reception of very weak stations would reduce the gain of $Q_1$ very slightly, if at all. The introduction of AGC in the 1920s marked the first major use of an electronic feedback control system. The AGC feedback path is called the AGC bus because in a full receiver it is usually "bused" back into a number of stages to obtain a large amount of gain control. Some receivers require more elaborate AGC schemes.

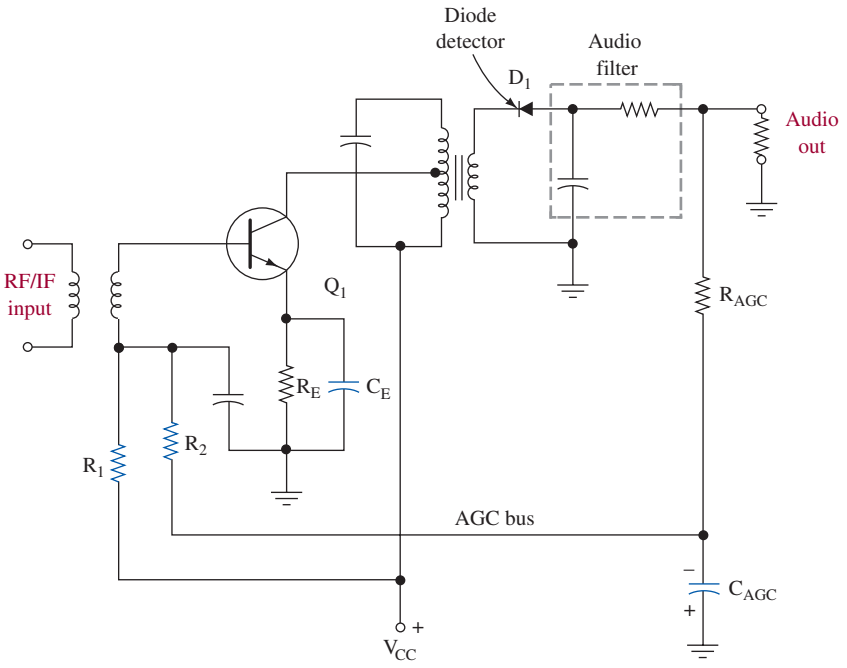


FIGURE 19 AGC circuit illustration.

## IF/AGC Amplifier

The IF/AGC amplifier shown in Figure 20 operates over an extremely wide input (J1) range of 82 dB. It uses two low-cost transistors (2N3904 and 2N3906) as peak detectors. Q2 functions as a temperature-dependent current source and Q1 as a halfwave detector. Q2 is biased for a collector current of 300 $\mu$A at 27°C with a 1 $\mu$A/°C temperature coefficient.

The current into capacitor $C_{AV}$ is the difference in the Q1, Q2 collector currents, which is proportional to the output signal at J2. The AGC voltage ($V_{AGC}$) is the time integral of this difference current. To ensure that $V_{AGC}$ is not sensitive to the short-term output signal changes, the rectified current in Q1 must, on average, balance the current in Q2. If the output of A2 is too small, $V_{AGC}$ will increase, thereby increasing the gain of A1 and A2. This will cause Q1 to conduct further until the current through Q1 balances the current through Q2.

The gain of ICs A1 and A2 is set at 41 dB maximum for a total possible 82-dB gain. They operate sequentially because the gain of A1 goes from minimum to maximum first and then A2's does the same as dictated by the AGC level. The full range of gain occurs from $V_{AGC} \simeq 5$ V (0 dB) to $V_{AGC} \simeq 7$ V (82 dB). This is approximately a linear relationship so that $V_{AGC} = 6$ V would cause a gain of about 41 dB $[(6 - 5)/(7 - 5) \times 82 = 41]$.

The bandwidth exceeds 40 MHz and thereby allows operation at standard IFs such as 455 kHz, 10.7 MHz, or 21.4 MHz. At 10.7 MHz the AGC threshold is 100 $\mu$V rms (−67 dBm) and the output is 1.4 V rms (3.9 V p-p). This corresponds to a gain of 83 dB (20 log 1.4 V/100 $\mu$V). The output holds steady at 1.4 V rms for inputs from −67 dBm to as high as +15 dBm, giving an 83-dB AGC range. Input signals above 15 dBm overdrive the device. The undesired harmonic outputs are typically at least 34 dB down from the fundamental.



# 7 AM Receiver Systems

We have thus far examined the various sections of AM receivers. It is now time to put it all together and look at the complete system. Figure 21 shows the schematic of a widely used circuit for a low-cost AM receiver. In the schematic shown in Figure 21, the push-pull audio power amp, which requires two more transistors, has been omitted.

The $L_1$–$L_2$ inductor combination is wound on a powdered-iron (ferrite) core and functions as an antenna as well as an input coupling stage. Ferrite-core loopstick antennas offer extremely good signal pickup, considering their small size, and are adequate for the strong signal strengths found in urban areas. The RF signal is then fed into $Q_1$, which functions as the mixer and local oscillator (self-excited). The ganged tuning capacitor, $C_1$, tunes to the desired incoming station (the *B* section) and adjusts the LO (the *D* section) to its appropriate frequency. The output of $Q_1$ contains the IF components, which are tuned and coupled to $Q_2$ by the $T_1$ package. The IF amplification of $Q_2$ is coupled via the $T_2$ IF "can" to the second IF stage, $Q_3$, whose output is subsequently coupled via $T_3$ to the diode detector $E_2$. Of course, $T_1$, $T_2$, and $T_3$ are all providing the very good superheterodyne selectivity characteristics at the standard 455-kHz IF frequency. The $E_2$ detector diode's output is filtered by $C_{11}$ so that just the intelligence envelope is fed via the $R_{12}$ volume control potentiometer into the $Q_4$ audio amplifier. The AGC filter, $C_4$, then allows for a fed-back control level into the base of $Q_2$.

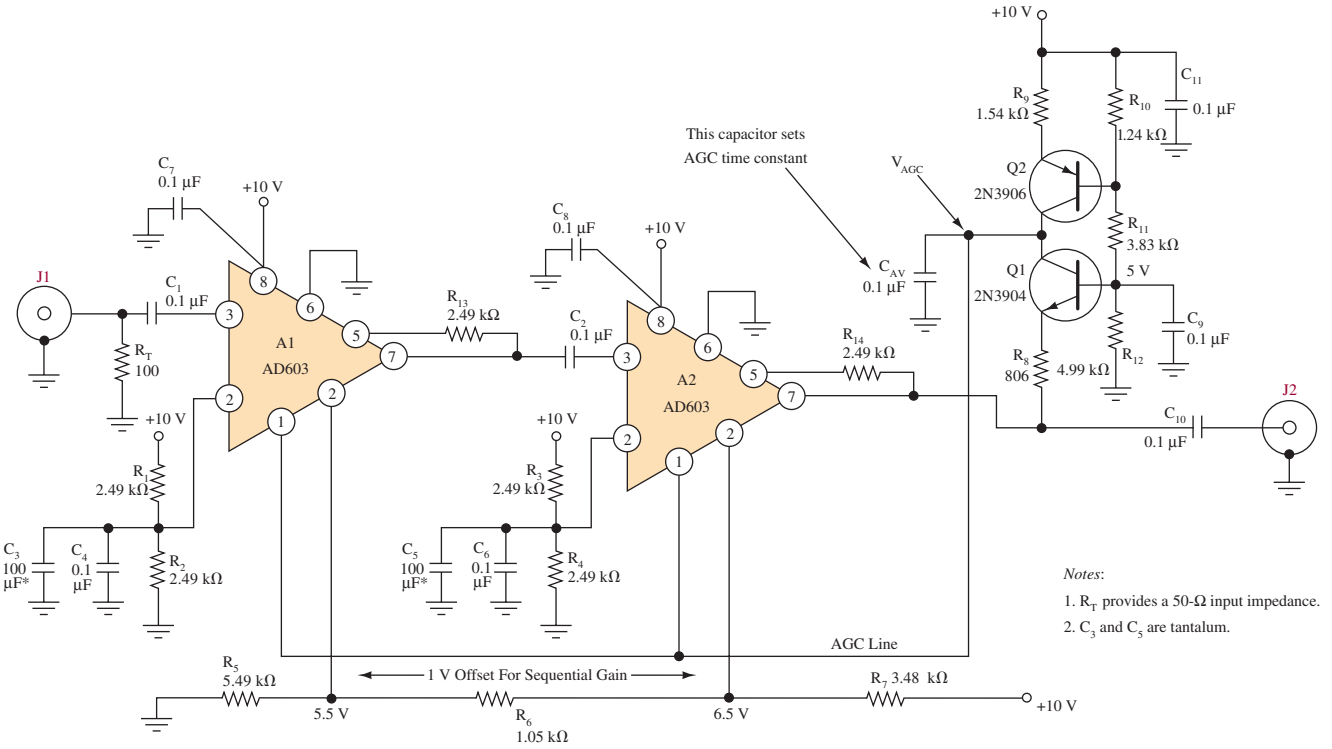


**FIGURE 20** Wide-range IF/AGC amplifier. (Reprinted with permission from *Electronic Design*, Penton Publishing Company.)

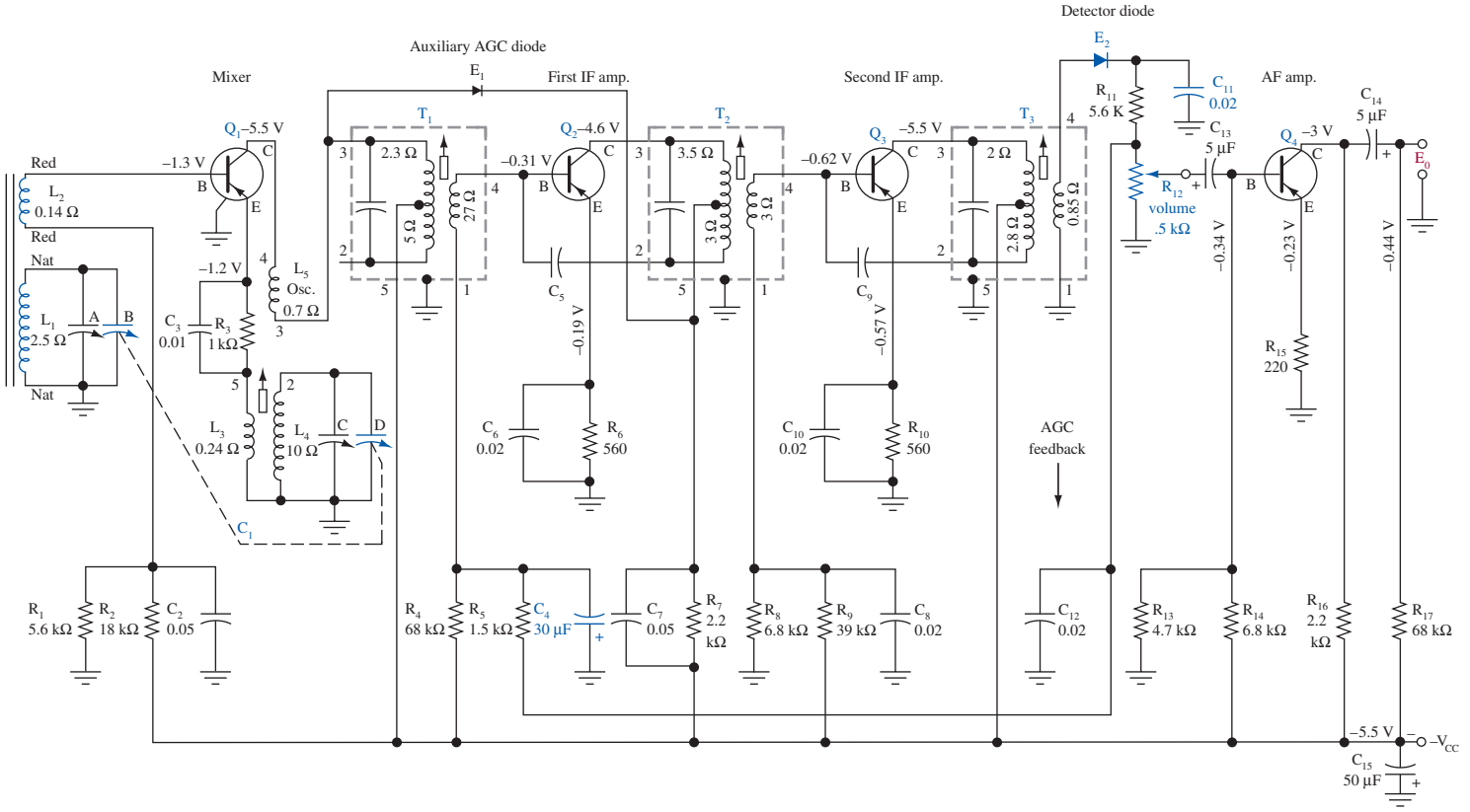


**FIGURE 21** AM broadcast superheterodyne receiver.

**Auxiliary AGC Diode**
reduces receiver gain for very large signals

This receiver also illustrates the use of an **auxiliary AGC diode** ($E_1$). Under normal signal conditions, $E_1$ is reverse biased and has no effect on the operation. At some predetermined high signal level, the regular AGC action causes the dc level at $E_1$'s cathode to decrease to the point where $E_1$ starts to conduct (forward bias), and it loads down the $T_1$ tank circuit, thus reducing the signal coupled into $Q_2$. The auxiliary AGC diode thus furnishes additional gain control for strong signals and enhances the range of signals that can be compensated for by the receiver.

## LIC AM Receiver

The complete function of a superheterodyne AM receiver can be accomplished with LICs. The only hitch is that the tuned circuits must be added on externally. Several AM chips are available from the various IC manufacturers. The Philips semiconductor TDA1572T is a typical unit and is shown in Figure 22. Notice that the device uses electronic tuning with variable capacitance diodes.

Even though the use of the LIC greatly reduces component count, the physical size and cost are not appreciably affected because they are mainly determined by the frequency selective circuits. Thus, LIC AM radios are not widely used for low-cost applications but do find their way into higher-quality AM receivers, where certain performance and feature advantages can be realized.

The limiting factor of tuned circuits is the only roadblock to having complete receivers on a chip except for the station selection and volume controls. Alternatives to *LC*-tuned circuits, such as ceramic filters, may be integrable in the future. Another possibility is the use of phase-locked-loop (PLL) technology in providing a nonsuperheterodyne type of receiver. Using this approach, it is theoretically possible to fabricate a functional AM broadcast-band receiver using just the chip and two external potentiometers (for volume control and station selection) and the antenna.

## AM Stereo

It is known that the reproduction of music with two separate channels can enrich and add to its realism. Broadcast AM has started to move into stereo broadcasts since several schemes were advanced in the late 1970s. Unfortunately, the FCC decided to let the marketplace decide on the best system. This led to confusion and no clear favorite. At this juncture we find that the Motorola system has become the de facto standard. It is no wonder that AM stereo has not become a favorite mode of broadcast as has FM radio, where a single approved system led to essentially total market coverage.

The Motorola C-Quam stereo signal is developed as shown in Figure 23. The carrier is phase-shifted so that essentially two carrier signals are developed. The two audio signals (left and right channels) are used to modulate the two carriers individually. Note that a reference 25-Hz signal also modulates one of the carrier signals. When the receiver detects the 25-Hz tone, it lights up an indicator to indicate stereo reception. The two AM signals are summed out of the modulator for final amplification and transmission. Regular receivers simply detect the left-plus-right signals for normal monaural reception. A specially equipped stereo receiver can differentiate between the two out-of-phase carriers and thereby develop the two separate audio signals.

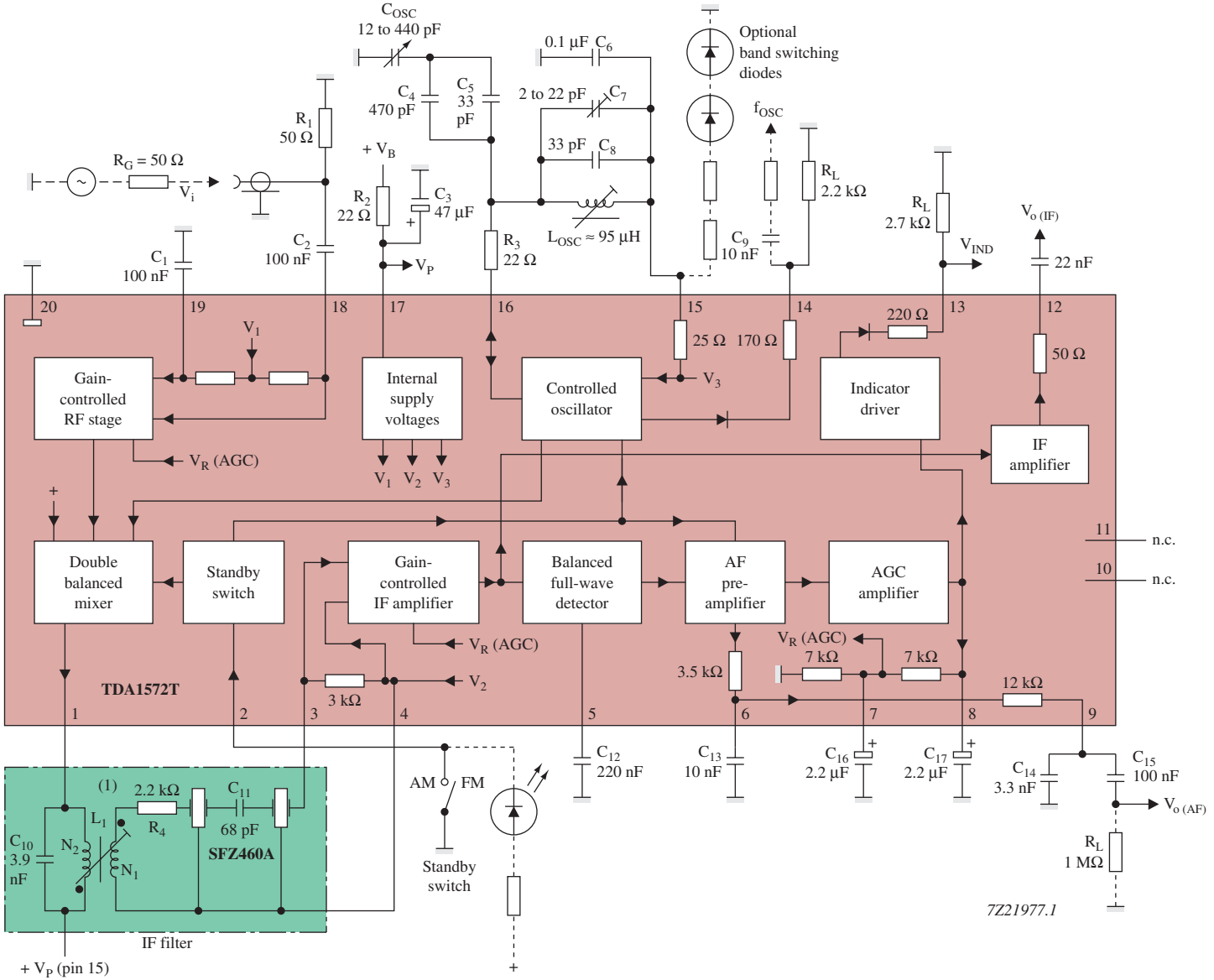


(1) Coil data: TOKO sample no. 7XNS-A7523DY; L1 : N1/N2 = 12/32; $Q_o$ = 65; $Q_B$ = 57.
Filter data: $Z_F$ = 700 Ω at $R_{3\text{-}4}$ = 3 kΩ; $Z_I$ = 4.8 kΩ.

FIGURE 22 TDA1572T AM receiver. (Courtesy of Philips Semiconductors.)

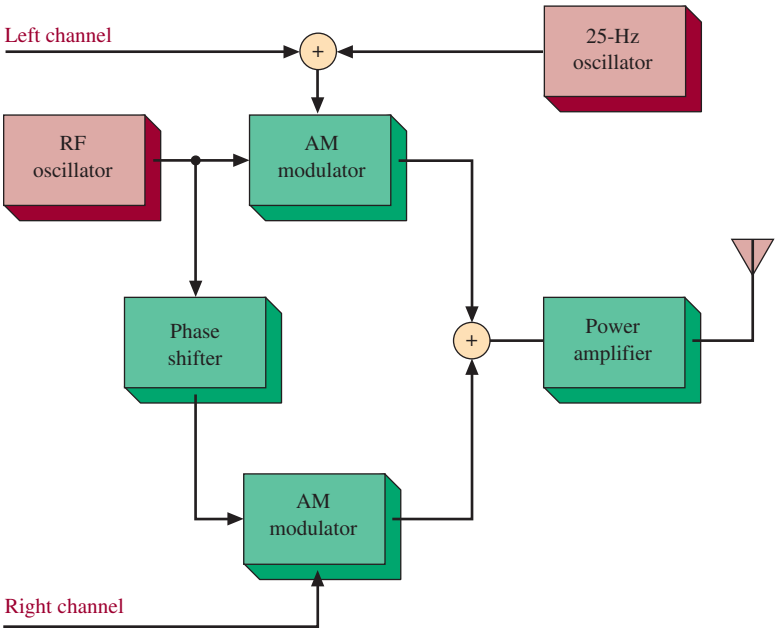


FIGURE 23 AM stereo block diagram.

Due to the phase-shifting of the carrier, two sets of sidebands are generated 90° out of phase. Figure 24 provides a pictorial representation of this condition. This is an example of combining two separate signals (left and right channels) into one frequency band. Additional information on this concept is provided in subsequent chapters.

A block diagram of a C-Quam AM stereo receiver is shown in Figure 25. An MC13024 IC is the basis of this system and the required "external" components are also shown. This circuit provides the complete receiver function requiring only a stereo audio power amplifier for the left and right channel outputs at pins 23 and 20.

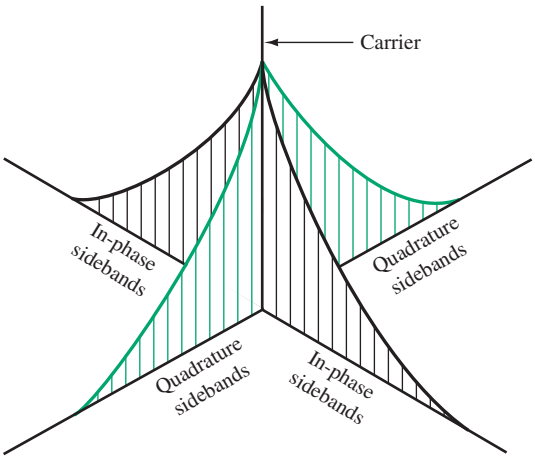


FIGURE 24 Phase relationships in AM stereo.

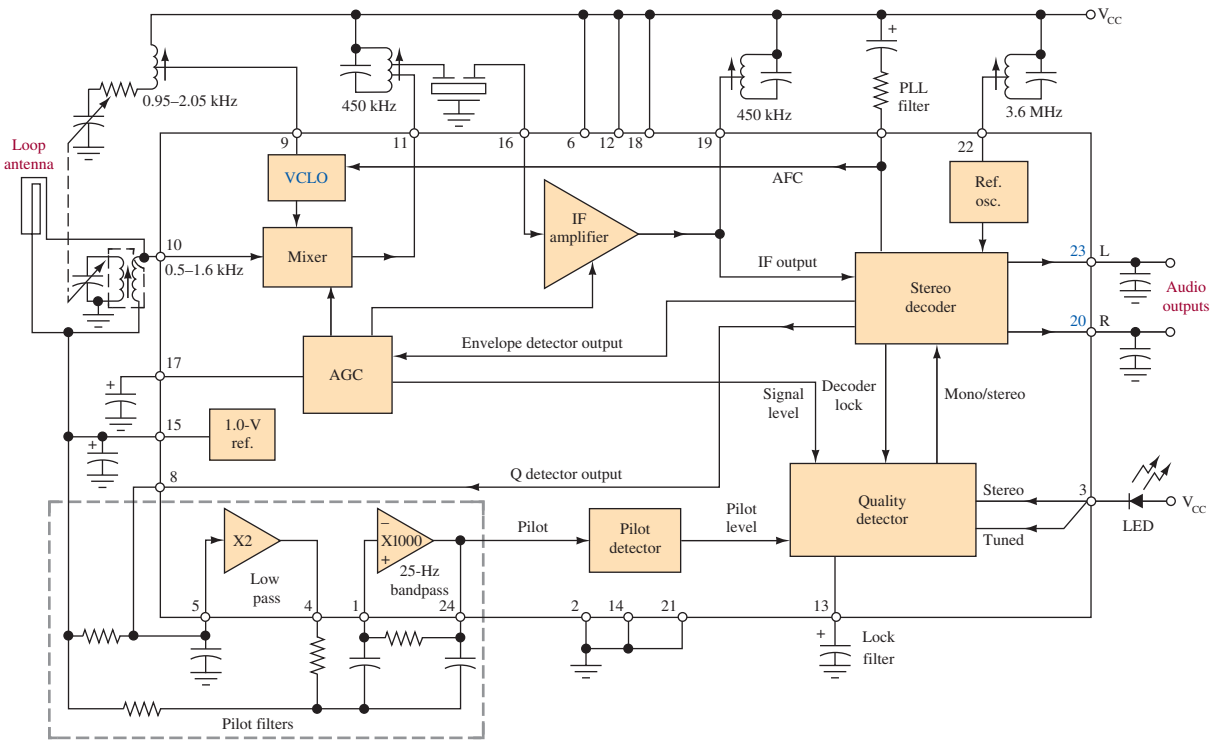


FIGURE 25 C-Quam receiver system. (Courtesy of Motorola, Inc.)

As you study this block diagram, you may not understand some of the "blocks." For instance, instead of a local oscillator input to the mixer, a voltage-controlled local oscillator (VCLO) is provided. It is controlled by an automatic frequency control (AFC) signal at pin 7 that is the result of a PLL.

## Receiver Analysis

It is convenient to consider power gain or attenuation of various receiver stages in terms of decibels related to a reference power level. The most often used references are with respect to 1 mW (dBm) and 1 W (dBW). In equation form,

$$\text{dBm} = 10 \log_{10} \frac{p}{1 \text{ mW}} \tag{6}$$

$$\text{dBW} = 10 \log_{10} \frac{p}{1 \text{ W}} \tag{7}$$

A dBm or dBW is an actual amount of power, whereas a dB represents a ratio of power. When dealing with a system that has several stages, the effect of dB and dBm can be dealt with easily. The following example shows this process.

## Example 3

*Consider the radio receiver shown in Figure 26. The antenna receives an 8-μV signal into its 50-Ω input impedance. Calculate the input power in watts, dBm, and dBW. Calculate the power driven into the speaker.*

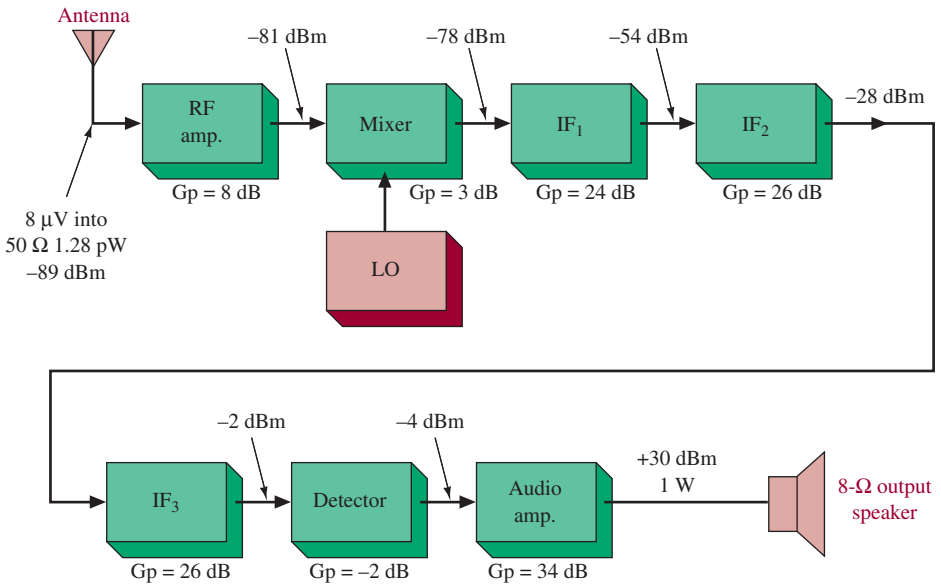


FIGURE 26 Receiver block diagram.

### Solution

$$P = \frac{V^2}{R} = \frac{(8\ \mu\text{V})^2}{50\ \Omega} = 1.28 \times 10^{-12}\ \text{W}$$

$$\text{dBm} = 10 \log_{10} \frac{P}{1\ \text{mW}} \tag{8}$$

$$= 10 \log_{10} \frac{1.28 \times 10^{-12}}{1 \times 10^{-3}} = -89\ \text{dBm}$$

$$\text{dBW} = 10 \log_{10} \frac{P}{1\ \text{W}} \tag{9}$$

$$= 10 \log_{10} \frac{1.28 \times 10^{-12}}{1} = -119\ \text{dBW}$$

Notice that dBm and dBW are separated by 30 dB—this is always the case because 30 dB represents a 1000:1 power ratio. To determine the power driven into the speaker, simply add the gains and subtract the losses (in dB) all the way through the system. The −89 dBm at the input is added to the 8-dB gain of the RF stage to give −81 dBm. Notice that the 8-dB gain is simply added to the dBm input to give −81 dBm. This, and all subsequent stages, is shown in Figure 26. Thus,

$$\begin{aligned} P_{\text{out(dBm)}} &= -89\ \text{dBm} + 8\ \text{dB} + 3\ \text{dB} + 24\ \text{dB} + 26\ \text{dB} \\ &\quad + 26\ \text{dB} - 2\ \text{dB} + 34\ \text{dB} \\ &= 30\ \text{dBm into speaker} \end{aligned}$$

$$30 \text{ dBm} = 10 \log_{10} \frac{P_{out}}{1 \text{ mW}}$$

$$3 = \log_{10} \frac{P_{out}}{1 \text{ mW}}$$

Therefore,

$$1000 = \frac{P_{out}}{1 \text{ mW}}$$

$$P_{out} = 1 \text{ W}$$

Example 3 assumed that the receiver's AGC was operating at some fixed level based on the input signal's strength. As previously explained, the AGC system will attempt to maintain that same output level over some range of input signal. **Dynamic range** is the decibel difference between the largest tolerable receiver input signal (without causing audible distortion in the output) and its sensitivity (usually the minimum discernible signal). Dynamic ranges of up to about 100 dB represent current state-of-the-art receiver performance.

**Dynamic Range**
in a receiver, the dB difference between the largest tolerable receiver input level and its sensitivity level



## 8 Troubleshooting

In this section we will analyze and troubleshoot the AM mixer circuit. The mixer circuit, also known as an autodyne circuit, is a combination of the local oscillator and the mixer in a single stage. We will also discuss power supply and audio amplifier problems in this section.

After completing this section you should be able to

- Troubleshoot an AM mixer circuit
- Identify an open input circuit
- Identify a dead or intermittent local oscillator circuit
- Identify causes for a dead or intermittent local oscillator
- Troubleshoot the receiver's power supply
- Troubleshoot the receiver's audio amplifier

### The Mixer Circuit

In Section 3 we saw that the local oscillator and the mixer play a very important part in AM reception. Figure 27 shows the mixer stage (autodyne circuit) of an AM radio. The received RF input signal is fed into the base of $Q_1$ from coils $L_1$ and $L_2$. The input AM radio signal is selected by tuning $C_1$; notice also that $C_1$ and $C_4$ are ganged. When $C_1$ is adjusted, $C_4$ will be adjusted by the same amount. The local oscillator portion of the converter stage is made up of $L_3$, $L_4$, and $C_4$. As $C_4$ is adjusted, the oscillator frequency changes to maintain a difference frequency of 455 kHz above the received AM signal. The feedback capacitor $C_3$ sends a portion of the oscillator signal from a tap on $L_4$ back to the emitter of $Q_1$. The received RF signal and the oscillator

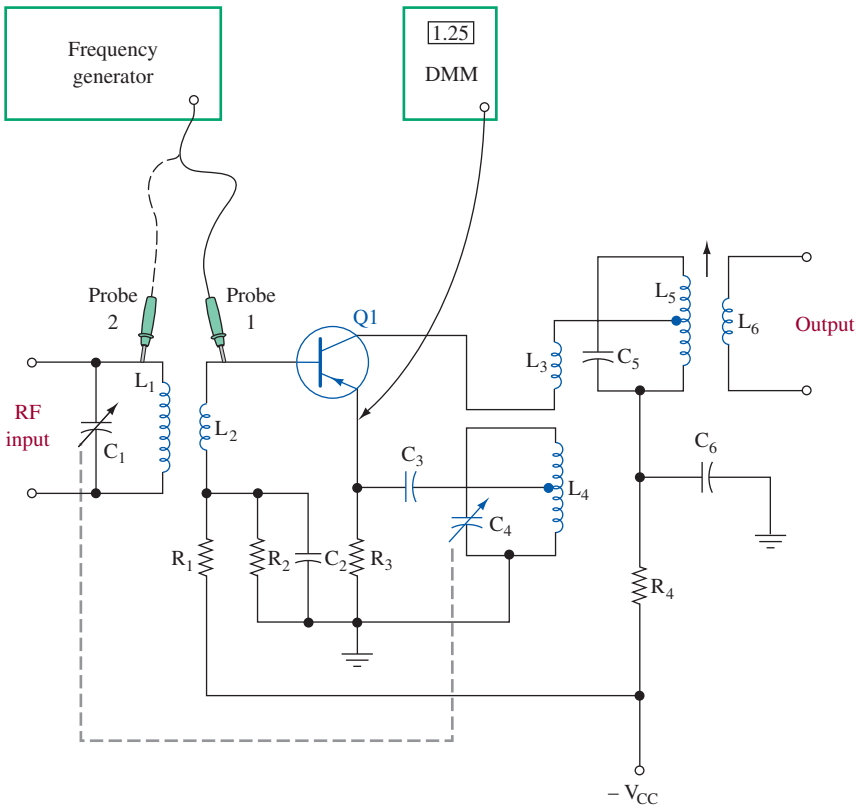


FIGURE 27 Troubleshooting a self-excited mixer.

signal are mixed in $Q_1$ to produce the IF, which is sent to $L_5$. All frequencies except the 455-kHz IF signal are filtered out by the tuned circuit's $L_5$ and $C_5$. Resistors $R_1$ and $R_2$ form a voltage divider network to bias the transistor's base–emitter circuit. Resistor $R_3$ acts as a dc stabilizer for the emitter circuit. Capacitor $C_2$ is a decoupling capacitor to keep the IF frequency from being fed back to the base of $Q_1$. Any IF signal present at the base would be shorted to ground. The transistor's collector dc voltage is supplied by $R_4$.

## No AM RF Signal

If the received AM RF signal does not reach the base of $Q_1$, no audio will be heard from the speaker. Noise may be heard when the tuning dial is moved across the band, but no stations will come in. An exception might be where a strong AM radio station in close proximity blends through into the converter transistor. A good indication of a working converter stage is to monitor the emitter voltage using a DMM as depicted in Figure 27. As the radio is tuned across the AM band, the voltage reading on DMM will change. An open winding in coil $L_1$ will cause the received AM signal to be lost. If a test signal were injected at the base of $Q_1$ (refer to Figure 27, signal generator probe 1), it would be heard from the speaker. If the test signal were applied to $L_1$

(Figure 27, probe 2), no signal would be heard. If the coil $L_2$ were open, AM reception would be lost. In addition, an open $L_2$ will isolate the base from the resistor voltage divider network. As a result, the base–emitter bias would be removed and the transistor would cut off. Coils $L_1$ and $L_2$ in most AM receivers are part of the antenna system. The antenna consists of a ferrite metal stick with very fine wires making up the two coils. These fine wires often break at the antenna or come loose from the printed circuit board, causing $L_1$ or $L_2$ to become open. Also, the wires from radio transformers usually break at the base of the transformer, where they are connected to the PCB. A dead converter stage can also result from a defective transistor.

## Dead Local Oscillator Portion of Converter

Measuring the voltage at the emitter with a DMM and tuning the radio across the AM band is a good indication of oscillator operation. If this voltage changes as the radio is tuned, the oscillator can be assumed to be functioning. An oscilloscope at the emitter of transistor $Q_1$ will show the oscillator waveform if it is present. If the local oscillator is dead (not operating), the signal will be missing and no voltage change will be detected by the DMM at the emitter of $Q_1$. An open $L_4$ will shut down the oscillator operation. The same is true for an open $C_4$.

## Poor AM Reception

A leaky capacitor $C_3$ can cause erratic operation of the local oscillator circuit. Received radio stations will fade in and fade out as a result of this erratic operation of the oscillator. A station may fade out altogether and the converter quit working from a severely leaking capacitor. This is due to the loading effect on the emitter circuit of $Q_1$. A local oscillator with poor tracking will affect radio reception at the high end or the low end of the AM band. A faulty $C_4$ or $C_1$ is a likely suspect if poor tracking occurs.

## Symptoms and Likely Causes

Table 1 lists symptoms and the likely circuit components that can cause them. Suspected faulty capacitors should be tested. The best method for testing capacitors is to use a capacitor checker. Some DMMs on the market today have a capacitor

**Table 1** Mixer Troubleshooting Chart

| Symptom | Troubleshooting Checks | Likely Trouble |
|---|---|---|
| No reception | Power okay; converter working | No input signal at base of $Q_1$; $L_1$ or $L_2$ open; transistor bad |
| Stations fade in and out | $Q_1$'s emitter voltage fluctuates | Converter operation erratic; $C_3$ leaky or open |
| No stations heard from mid- to low-AM band | DMM voltage changes when radio is tuned | LO not tracking across AM band; $C_1$ or $C_4$ faulty |
| No stations heard from mid- to high-AM band | DMM voltage changes when radio is tuned | LO not tracking across AM band; $C_1$ or $C_4$ faulty |

check function. The capacitor values are small in the converter circuit and should be tested out of the circuit. Open coils can be found using the ohmmeter setting of the DMM. A good coil will measure a low resistance and an open coil will measure a very high resistance. Coils can usually be measured without removing them from the circuit. If the converter transistor is suspect, test it with a transistor tester. Modern DMMs are equipped with this function. An open or shorted transistor can be tested with the DMM diode check setting or the ohmmeter setting.

## Troubleshooting the Power Supply

If the receiver is completely dead, that is, no sound comes from the speaker, you should immediately suspect the power supply. This is one part of a receiver where the technician can often easily find and repair a problem.

Receivers are powered by batteries or a transformer-rectifier supply connected to the 110-V lines. Batteries usually power portable radios. A 9-V battery is most common. To check its output voltage, turn the radio on (to load the battery) and measure the battery's terminal voltage. If it is significantly below 9 V, perhaps 8 V or less, replace the battery and recheck the unit. Also check for corroded terminals.

Some radios employ a group of cells to obtain the necessary voltage. These must be connected in a series-aiding configuration of the positive terminal of one cell to the negative terminal of the next, and so on. The battery compartment has a diagram with battery symbols and plus and minus signs molded into the plastic to help you install the cells properly. Should one cell be placed in the compartment backward, it would cancel the voltage of two cells, thereby dropping the total voltage to the point where the radio would not work. Check for proper installation of all cells. Then perform the loaded test described above for 9-V batteries.

Stereos and communications receivers will most likely use a regulated power supply similar to that shown in Figure 28. Start troubleshooting by checking the output voltage with a DMM connected between point D and ground. If the voltage is correct (per manual specs), your problem lies elsewhere. If not, test the fuse for continuity and be sure the power plug is connected to a "hot" outlet and the switch is on. Next, check the rectifier output waveform at point A with an oscilloscope per the diagram in Figure 29. The waveform should be similar to the one illustrated.

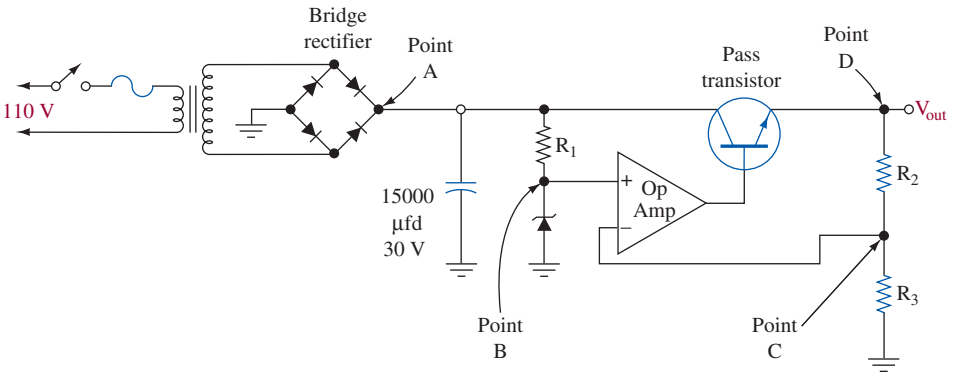


FIGURE 28 Regulated power supply.

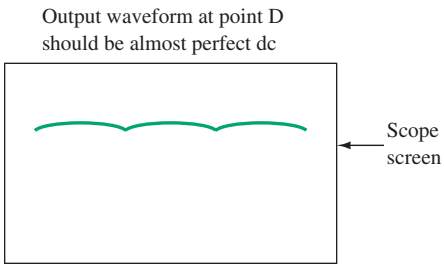


FIGURE 29 Bridge rectifier and filter operating properly.

If the rectifier output waveform is not similar to that shown in Figure 29, one or more diodes in the bridge have probably failed. Diodes fail in one of two ways, either by opening or shorting. An open diode changes the bridge rectifier from full-wave to half-wave. As a result, ripple increases dramatically (see Figure 30). A shorted diode causes heavy currents that should blow the fuse or, at the very least, cause overheated components.

Bridge rectifiers are usually encapsulated (you cannot get at the individual diodes). The unit must therefore be replaced should problems be found.

If the filter capacitor (from point A to ground) opens, the bridge output will be unfiltered, making it more difficult for the voltage regulator to eliminate ripple. It's difficult to say exactly what the waveform would look like; check the maintenance manual for details.

A shorted filter capacitor shorts the rectifier output, causing at best a blown fuse, and at worst a burned-out rectifier and/or power transformer. In either case, open or shorted, replace the capacitor.

Assuming the rectifier and filter capacitor pass the tests discussed above, measure the zener reference voltage at point B and compare with the specs per the manual. Measure the voltage at point C, the feedback voltage to the inverting input of the op-amp. It should be within a tenth of a volt or so of the zener voltage. The point C voltage can be calculated using the voltage division formula:

$$V \text{ at point C} = V_{out}(R_3)/(R_2 + R_3)$$

Measure the emitter–collector voltage of the pass transistor. It should be approximately 5 to 7 V depending on power supply load. If this voltage is a few tenths of a volt or less, the transistor is shorted and must be replaced.

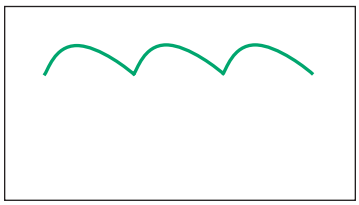

FIGURE 30 Ripple increase caused by open diode.

*Note*: The above comments on power supply troubleshooting apply for any piece of equipment using a regulated power supply, not just superheterodyne receivers.

## Troubleshooting the Audio Amplifier

A quick test to determine whether an audio amplifier is working is first find the volume control. It will have three terminals on it. Touch a screwdriver or piece of wire to the center terminal as shown in Figure 31. If the amplifier is working, you should hear a loud 60-Hz hum coming from the loudspeaker.

If the amplifier fails this quick test, do a dc check of voltages throughout the circuit. If nothing shows up, connect an audio generator via a 0.1-$\mu f$ capacitor to the center terminal of the volume control. Set the generator to approximately 1 kHz at perhaps 50-mV amplitude. Using an oscilloscope, observe the signal at each collector and base between the volume control and loudspeaker. Should the signal be present at one point and not the next, find the defective component and replace it.

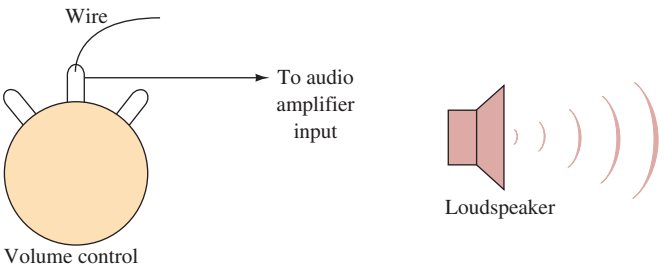


FIGURE 31 Testing an audio amplifier.

## Troubleshooting the RF Portions of a Superhet Receiver

**Signal Injection**
troubleshooting by injecting an input signal and tracing through the circuit to locate the failed component

In general, troubleshooting a receiver's RF sections is done using the time-tested method of **signal injection** and tracing. The approach is the same discussed for audio amplifiers except that now a high-frequency RF signal, usually modulated, is being used. This signal is connected to or injected into the receiver's antenna input terminals. The signal tracer, which can be either a scope or an RF probe on a voltmeter, is then connected to the inputs and outputs of each amplifier stage, one after the other, until the signal is lost. In this way, the defect is isolated and located with further tests.



## 9 Troubleshooting with Electronics Workbench™ Multisim

This chapter explored the circuits used for receiving and detecting an AM signal. The diode detector shown in Figure 32 is an example of a circuit that can be used to recover the intelligence contained in an AM carrier. **Fig3-32** found at www.pearsoned.com/electronics is provided to help you investigate further the operation of a diode detector.

Open **Fig3-32** at www.pearsoned.com/electronics. This circuit contains an AM source with a carrier frequency of 100 kHz being modulated by a 1-kHz sinusoid. The modulation index is 50 percent. Open the AM source by double-clicking on the

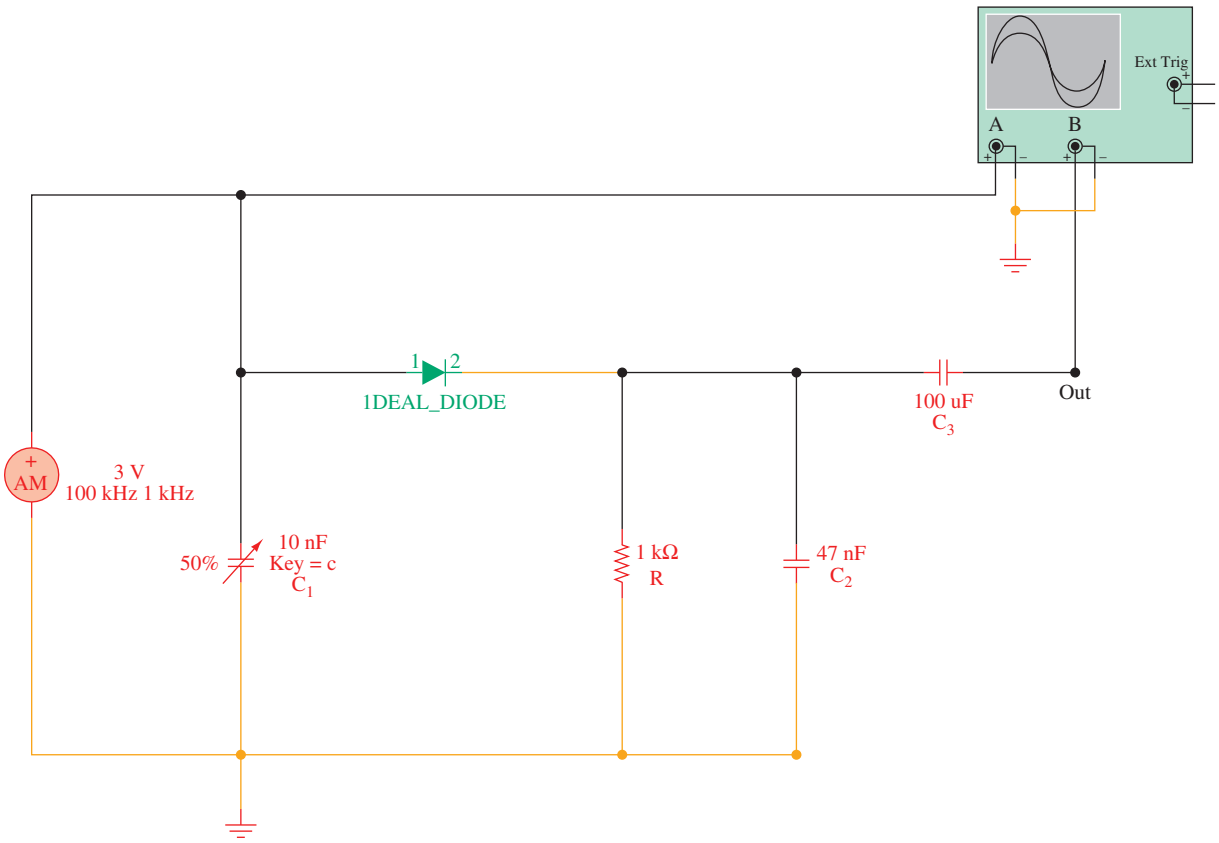


FIGURE 32 An AM diode detector circuit as implemented with Electronics Workbench™ Multisim.

**AM** icon. Click on the **value** tab. It should show that the carrier amplitude is 3 V, the carrier frequency is 100 kHz, the modulation index is 0.5 (50 percent), and the modulating frequency is 1 kHz. These values can be changed by the user to meet the needs of a particular simulation. Click the **start simulation** button and observe the traces on the oscilloscope.

The AM source is connected to the channel A input and the output of the detector is connected to the channel B input. The oscilloscope traces from the diode detector are shown in Figure 33. There appears to be a little carrier noise on the recovered 1-kHz sinusoid. How can this noise be removed? Was a 1-kHz sinusoid recovered? Use the cursors to verify that a 1-kHz signal was recovered. Measure the modulation index of the AM source as shown in Figure 33. Compare your measurement to the expected 50 percent value set in the AM source.

Capacitor 1 in Figure 32 is called a *virtual capacitor*. Double-click on **C1** and select the **value** tab. The information about the virtual capacitor shows that this is a 10-nF capacitor; pressing **c** on the keyboard decreases the capacitance value by 5 percent, and pressing **C** increases the value by 5 percent. Experiment with this adjustment and see if changing the capacitance value affects the recovered signal. Make sure that you click on the schematic window to enable control of the virtual components. Adjustments to the virtual capacitor are not active if another window, such as the oscilloscope window, is currently selected.

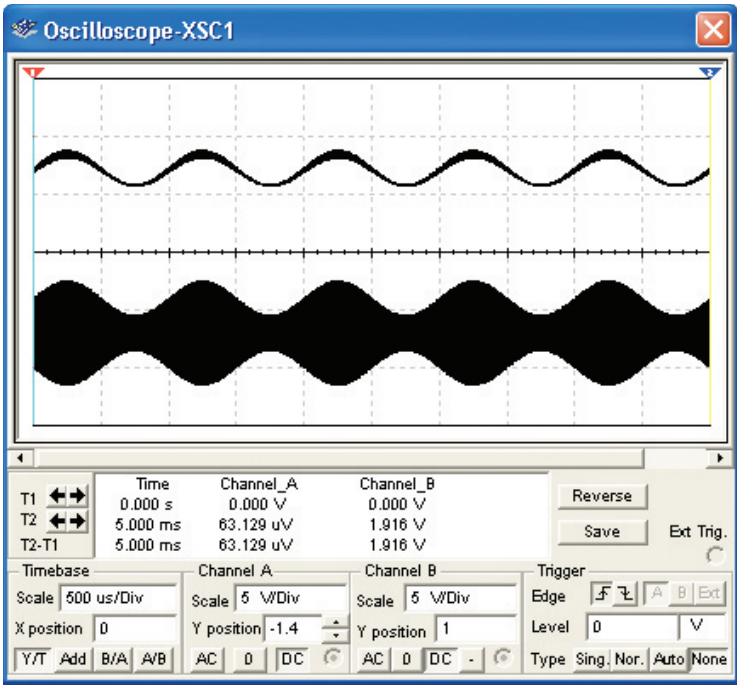


FIGURE 33 Oscilloscope output traces from the diode detector.

Next, open **FigE3-1.** This circuit looks the same as **Fig3-32** except that this circuit contains a fault. Use the oscilloscope to view the traces in the circuit. Good troubleshooting practice says: *Always perform a visual check of the circuit and check the vital signs. Checking vital signs implies that you must check power-supply voltages and also examine the input signals.*

Start the simulation of the circuit and view the output and input traces. Notice that the input AM envelope looks the same, whereas the output is significantly different. This circuit does not show a power supply, but just in case, visually check that the ground connections are in place. The input signal (the AM envelope) and the ground connections are good, so the problem rests with a component. Verify that the output coupling capacitor is allowing the signal to pass properly from the detector to the output. Do this by connecting the oscilloscope A and B channels to each side of C3. You will notice that the signal is the same on both sides, which indicates that C3 is good. Electronics Workbench Multisim provides a feature that allows for the addition of a component fault in a circuit. Double-click on each of the components and check the setting under the **Fault** tab. You will discover that R1 is shorted. Change the fault setting back to **none,** which means no fault, and simulate the circuit again. The circuit should now be operational.

Additional insight into troubleshooting with Electronics Workbench™ Multisim is provided in the EWB exercises below.

## Electronics Workbench™ Exercises

1. Open **FigE3-2** found at www.pearsoned.com/electronics. Determine if this circuit is working properly. If it is not, find the fault. Describe why this fault would have caused the output waveform you observed.

2. Open **FigE3-3** found at www.pearsoned.com/electronics. Determine if this circuit is working properly. If it is not, find the fault. Describe why this fault would have caused the output waveform you observed.
3. Open **FigE3-4** found at www.pearsoned.com/electronics. Adjust the virtual capacitors C1 and C3 to provide an output waveform that contains minimal RF noise. This process requires that you adjust C1 and then C3 and keep repeating this sequence until an optimized output is obtained (C1 = 50%, C3 = 70%).



## Summary

In this chapter the basics of AM receivers were introduced. The development of receivers from the simplest to superheterodyne systems was discussed. The major topics you should now understand include:

- the basics of a simple radio receiver
- the fundamental concepts of sensitivity and selectivity
- the functional blocks of a tuned radio frequency (TRF) receiver
- the input/output characteristics of a nonlinear device used as an AM detector
- the characteristics, operation, types, and design considerations of diode detectors
- the advantages of synchronous detection over the basic diode detector
- a complete analysis of superheterodyne receiver operation
- the tuning and tracking of a superheterodyne receiver
- an analysis of image frequency and methods for its attenuation
- the operation and typical circuits of the functional blocks in a superheterodyne receiver
- the need for automatic gain control (AGC) in a receiver and the description of a typical circuit and its operation
- the description of various superheterodyne receiver systems with power gain analysis



## Questions and Problems

### Section 1

*1. Draw a diagram of a tuned radio-frequency (TRF) radio receiver.
*2. Explain the following: sensitivity of a receiver; selectivity of a receiver. Why are these important characteristics? In what units are they usually expressed?
3. Explain why a receiver can be overly selective.
4. A TRF receiver is to be tuned over the range 550 to 1550 kHz with a 25-$\mu$H inductor. Calculate the required capacitance range. Determine the tuned circuit's necessary $Q$ if a 10-kHz bandwidth is desired at 1000 kHz. Calculate the receiver's selectivity at 550 and 1550 kHz. (0.422 to 3.35 nF, 100, 5.5 kHz, 15.5 kHz)

*An asterisk preceding a number indicates a question that has been provided by the FCC as a study aid for licensing examinations.



## Section 2

*5. Explain the operation of a diode detector.
6. Describe the advantages and disadvantages of a diode detector.
7. Describe diagonal clipping.
8. What association does diagonal clipping have with modulation index?
9. Explain how diagonal clipping occurs in a diode detector.
10. Provide the advantages of a synchronous detector compared to a diode detector. Explain its principle of operation.

## Section 3

*11. Draw a block diagram of a superheterodyne AM receiver. Assume an incident signal, and explain briefly what occurs in each stage.
*12. What type of radio receivers contains intermediate-frequency transformers?
13. The AM signal into a mixer is a 1.1-MHz carrier that was modulated by a 2-kHz sine wave. The local oscillator is at 1.555 MHz. List all mixer output components and indicate those accepted by the IF amplifier stage.
*14. Explain the purpose and operation of the first detector in a superhet receiver.
15. Explain how the variable tuned circuits in a superheterodyne receiver are adjusted with a single control.

## Section 4

16. Provide an adjustment procedure whereby adequate tracking characteristics are obtained in a superheterodyne receiver.
17. Draw a schematic that illustrates *electronic* tuning using a varactor diode.
18. A silicon varactor diode exhibits a capacitance of 200 pF at zero bias. If it is in parallel with a 60-pF capacitor and 200-$\mu$H inductor, calculate the range of resonant frequency as the diode varies through a reverse bias of 3–15 V. (966 kHz, 1.15 MHz)
19. A varactor diode has $C_0$ equal to 320 pF. Plot a curve of capacitance versus $V_R$ from 0 to 20 V. The diode is used with a 200-$\mu$H coil. Plot the resonant frequency versus $V_R$ from 0 to 20 V and suggest how the response could be linearized.

## Section 5

*20. If a superheterodyne receiver is tuned to a desired signal at 1000 kHz and its conversion (local) oscillator is operating at 1300 kHz, what would be the frequency of an incoming signal that would possibly cause *image* reception? (1600 kHz)
21. A receiver tunes from 20 to 30 MHz using a 10.7-MHz IF. Calculate the required range of oscillator frequencies and the range of image frequencies.
22. Show why image frequency rejection is not a major problem for the standard AM broadcast band.
*23. What are the advantages to be obtained from adding a tuned radio-frequency amplifier stage ahead of the first detector (converter) stage of a superheterodyne receiver?
*24. If a transistor in the only radio-frequency stage of your receiver shorted out, how could temporary repairs or modifications be made?
25. What advantages do dual-gate MOSFETs have over BJTs for use as RF amplifiers?

*26. What is the *mixer* in a superheterodyne receiver?
27. Describe the advantage of an autodyne mixer over a standard mixer.
28. Why is the bulk of a receiver's gain and selectivity obtained in the IF amplifier stages?

## Section 6

29. Describe the difficulties in listening to a receiver without AGC.
*30. How is *automatic volume control* accomplished in a radio receiver?
31. Explain how the ac gain of a transistor can be controlled by a dc AGC level.
32. The IF/AGC system in Figure 20 has an AGC level of 5.5 V ($V_{AGC} = 5.5$ V). Determine the rms output voltage and the gain of the A1, A2 amplifier combination. Calculate the rms input voltage. (1.4 V rms, 20.5 dB, 0.132 V rms)

## Section 7

33. Describe the function of auxiliary AGC.
34. What is the major limiting function with respect to manufacturing a complete superheterodyne receiver on an LIC chip?
35. A superhet receiver tuned to 1 MHz has the following specifications:
    *RF amplifier:* $P_G = 6.5$ dB, $R_{in} = 50\ \Omega$ *Detector:* 4-dB attenuation
    *Mixer:* $P_G = 3$ dB *Audio amplifier*: $P_G = 13$ dB
    *3 IFs:* $P_G = 24$ dB each at 455 kHz
    The antenna delivers a 21-$\mu$V signal to the RF amplifier. Calculate the receiver's image frequency and input/output power in watts and dBm. Draw a block diagram of the receiver and label dBm power throughout. (1.91 MHz, 8.82 pW, −80.5 dBm, 10 mW, 10 dBm)
36. A receiver has a dynamic range of 81 dB. It has 0.55 nW sensitivity. Determine the maximum allowable input signal. (0.0692 W)
37. Define *dynamic range.*
38. Describe the C-Quam system of generating broadcast AM stereo. Explain why it hasn't met with widespread acceptance like FM stereo has.
39. Define a *quadrature signal* and explain its use in AM stereo.

## Section 8

40. You are troubleshooting an AM receiver. You have determined that the RF signal is not reaching Q1's base in the self-excited mixer of Figure 27. Explain possible causes and a procedure to pinpoint the problem.
41. Describe possible problems after it is determined that voltage measurements taken on the emitter of Q1 in Figure 27 show a zero volt reading.
42. Describe operation of the mixer in Figure 27 if the local oscillator stops functioning.
43. Assume the output of the first IF amplifier in Figure 27 is 2455 kHz. What is a probable cause?
44. The regulated power supply in Figure 28 has no output. Describe how you would troubleshoot this circuit.
45. The power supply in Figure 28 provides a 12-V output. Calculate the voltage at point C if $R_2 = 330\ \Omega$ and $R_3 = 470\ \Omega$. (7.05 V)
46. In Figure 28, suppose the 15,000 $\mu$fd capacitor was open. Describe the output voltage.



47. Using the block diagram of a receiver (Figure 26), explain how to isolate methodically a problem that lies in the detector stage of the receiver.
48. Describe how a receiver's volume control can be used to determine problems with the audio amplifier.

## Questions for Critical Thinking

49. Which of the factors that determine a receiver's sensitivity is more important? Defend your judgment.
50. Would passing an AM signal through a nonlinear device allow recovery of the low-frequency intelligence signal when the AM signal contains only high frequencies? Why or why not?
51. Justify in detail the choice of a superheterodyne receiver in an application that requires constant selectivity for received frequencies.
52. A superheterodyne receiver tunes the band of frequencies from 4 to 10 MHz with an IF of 1.8 MHz. The double-ganged capacitor used has a 325 pF maximum capacitance per section. The tuning capacitors are at the maximum value (325 pF) when the RF frequency is 4 MHz. Calculate the required RF and local oscillator coil inductance and the required tuning capacitor values when the receiver is tuned to receive 4 MHz and 10 MHz. (4.87 $\mu$H, 2.32 $\mu$H, 52 pF, 78.5 pF)

# SINGLE-SIDEBAND COMMUNICATIONS

From *Modern Electronic Communication*, Ninth Edition, Jeffrey S. Beasley, Gary M. Miller. Copyright © 2008 by Pearson Education, Inc. Published by Prentice Hall. All rights reserved.

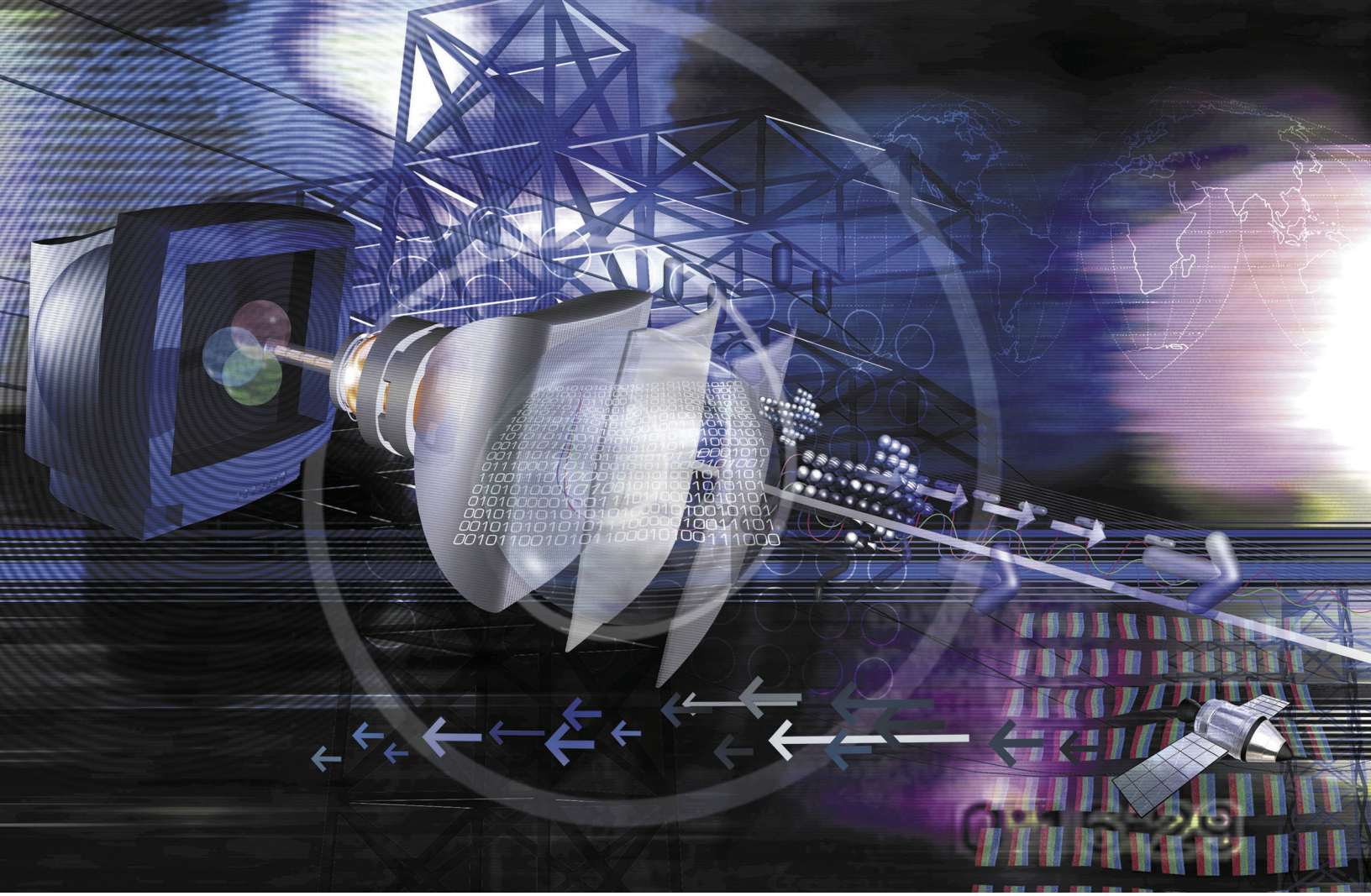

## Chapter Outline

1 Single-Sideband Characteristics
2 Sideband Generation: The Balanced Modulator
3 SSB Filters
4 SSB Transmitters
5 SSB Demodulation
6 SSB Receivers
7 Troubleshooting
8 Troubleshooting with Electronics Workbench™ Multisim

## Objectives

- Describe how an AM generator could be modified to provide SSB
- Discuss the various types of SSB and explain their advantages compared to AM
- Explain circuits that are used to generate SSB in the filter method and describe the filters that can be used
- Analyze the phase-shift method of SSB generation and give its advantages
- Describe several methods used to demodulate SSB systems
- Provide a complete block diagram for an SSB transmitter/receiver
- Determine the frequencies at all points in an SSB receiver when receiving a single audio tone

# SINGLE-SIDEBAND COMMUNICATIONS




The Kaito KA1103 shortwave radio. (Courtesy of Kaitousa.)

## Key Terms

peak envelope power
pilot carrier
twin-sideband suppressed carrier
independent sideband transmission
balanced modulator
double-sideband suppressed carrier
balanced ring modulator
ring modulator
lattice modulator
surface acoustic wave filter
phasing capacitor
rejection notch
shape factor
peak-to-valley ratio
ripple amplitude
conversion frequency
crystal-lattice filter
continuous wave
compandor
product detector
Butterworth filter
carrier leakthrough



# 1 Single-Sideband Characteristics

The basic concept of single-sideband (SSB) communications was understood as early as 1914. It was first realized through mathematical analysis of an amplitude-modulated RF carrier. Recall that when a carrier is amplitude modulated by a single sine wave, it generates three different frequencies: (1) the original carrier with amplitude unchanged; (2) a frequency equal to the difference between the carrier and the modulating frequencies, with an amplitude up to one-half (at 100% modulation) the modulating signal; and (3) a frequency equal to the sum of the carrier and the modulating frequencies, with an amplitude also equal to a maximum of one-half that of the modulating signal. The two new frequencies, of course, are the side frequencies.

Upon recognition of the fact that sidebands existed, further investigation showed that after the carrier and one of the sidebands were eliminated, the other sideband could be used to transmit the intelligence. Since its amplitude and frequency never change, there is no information contained in the carrier. Further experiments proved that both sidebands could be transmitted, each containing different intelligence, with a suppressed or completely eliminated carrier.

By 1923, the first patent for this system had been granted, and a successful SSB communications system was established between the United States and England. Today, SSB communications play a vital role in radio communications because of their many advantages over standard AM systems. The Federal Communications Commission (FCC) recognizing these advantages, further increased their use by requiring most transmissions in the overcrowded 2- to 30-MHz range to be SSB starting in 1977.

## Power Distribution

You should recall that in AM all the intelligence (information) is contained in the sidebands, but two-thirds (or more) of the total power is in the carrier. It would appear that a great amount of power is wasted during transmission. The basic principle of single-sideband transmission is to eliminate or greatly suppress the high-energy RF carrier. This can be accomplished, but accurate tuning is not possible without a carrier and it does affect the fidelity of the music and sounds. However, voice reception is still tolerable.

If a means of suppressing or completely eliminating the carrier is devised, the power that was used for the carrier can be converted into useful power to transmit the intelligence in the sidebands. Since both upper and lower sidebands contain the same intelligence, one of these could also be eliminated, thereby cutting the bandwidth required for transmission in half.

The total power output of a conventional AM transmitter is equal to the carrier power plus the sideband power. Conventional AM transmitters are rated in carrier power output. Consider a low-power AM system operating at 100 percent modulation. The carrier is 4 W and therefore each sideband is 1 W. The total transmitted power at 100 percent modulation is 6 W (4 W + 1 W + 1 W), but the AM transmitter is rated as a 4 W (just the carrier power) transmitter. If this system were converted to SSB, just one sideband at 1 W would be transmitted. This, of course, assumes a sine-wave intelligence signal. SSB systems are

most often used for voice communications, which certainly do not generate a sinusoidal waveform.

SSB transmitters (and linear power amplifiers in general) are usually rated in terms of **peak envelope power** (PEP). To calculate PEP, multiply the maximum (peak) envelope voltage by 0.707, square the result, and divide by the load resistance. For instance, an SSB signal with a maximum level (over time) of 150 V p-p driven into a 50-Ω antenna results in a PEP rating of $(150/2 \times 0.707)^2 \div 50\ \Omega = 56.2$ W. This is the same power rating that would be given to the 150-V p-p sine wave, but there is a difference. The 150-V p-p level in the SSB voice transmission may occur only occasionally, while for the sine wave it occurs every cycle. These calculations are valid no matter what type of waveform the transmitter is providing. This could range from a series of short spikes with low average power (perhaps 5 W out of the PEP of 56.2 W) to a sine wave that would yield 56.2 W of average power. With a normal voice signal an SSB transmitter develops an average power of only one-fourth to one-third its PEP rating. Most transmitters cannot deliver an average power output equal to their peak envelope power capability. This is because their power supplies and/or components in the output stage are designed for a lower average power (voice operation) and cannot continuously operate at higher power levels.

**Peak Envelope Power**
method used to rate the output power of an SSB transmitter

## Types of Sideband Transmission

A number of single-sideband systems have been developed. The major types include the following:

1. In the standard single sideband, or simply SSB, system the carrier and one of the sidebands are completely eliminated at the transmitter; only one sideband is transmitted. This is quite popular with amateur radio operators. The chief advantages of this system are maximum transmitted signal range with minimum transmitter power and the elimination of carrier interference.
2. Another system eliminates one sideband and suppresses the carrier to a desired level. The suppressed carrier can then be used at the receiver for a reference, AGC, automatic frequency control (AFC), and, in some cases, demodulation of the intelligence-bearing sideband. This is called a single-sideband suppressed carrier (SSBSC). The suppressed carrier is sometimes called a **pilot carrier.** This system retains fidelity of the received signal and minimizes carrier interference.
3. The type of system often used in military communications is referred to as **twin-sideband suppressed carrier,** or **independent sideband (ISB) transmission.** This system involves the transmission of two independent sidebands, each containing different intelligence, with the carrier suppressed to a desired level.
4. Vestigial sideband is used for television video transmissions. In it, a vestige (trace) of the unwanted sideband and the carrier are included with one full sideband.
5. A more recently developed system is called amplitude-compandored single sideband (ACSSB). It is actually a type of SSBSC because a pilot carrier is usually included. In ACSSB the amplitude of the speech signal is compressed at the transmitter and expanded at the receiver. Performance gains of ACSSB systems over SSB are explained in Section 4.

**Pilot Carrier**
the suppressed carrier in SSB; the carrier is reduced to a lower level but not removed completely

**Twin-Sideband Suppressed Carrier**
the transmission of two independent sidebands, containing different intelligence, with the carrier suppressed to a desired level

**Independent Sideband Transmission**
another name for twin-sideband suppressed carrier transmission

## Advantages of SSB

The most important advantage of SSB systems is a more effective utilization of the available frequency spectrum. The bandwidth required for the transmission of one conventional AM signal contains two equivalent SSB transmissions. This type of communications is especially adaptable, therefore, to the already overcrowded high-frequency spectrum.

A second advantage of this system is that it is less subject to the effects of selective fading. In the propagation of conventional AM transmissions, if the upper-sideband frequency strikes the ionosphere and is refracted back to earth at a different phase angle from that of the carrier and lower-sideband frequencies, distortion is introduced at the receiver. Under extremely bad conditions, complete signal cancellation may result. The two sidebands should be identical in phase with respect to the carrier so that when passed through a nonlinear device (i.e., a diode detector), the difference between the sidebands and carrier is identical. That difference is the intelligence and will be distorted in AM systems if the two sidebands have a phase difference.

Another major advantage of SSB is the power saved by not transmitting the carrier and one sideband. The resultant lower power requirements and weight reduction are especially important in mobile communication systems.

The SSB system has a noise advantage over AM due to the bandwidth reduction (one-half). Taking into account the selective fading improvement, noise reduction, and power savings, SSB offers about a 10- to 12-dB advantage over AM.

***Obtaining a 12-dB Advantage*** Given a 50-kW carrier, the peak power is

$$4 \times 50 \text{ kW} = 200 \text{ kW}$$

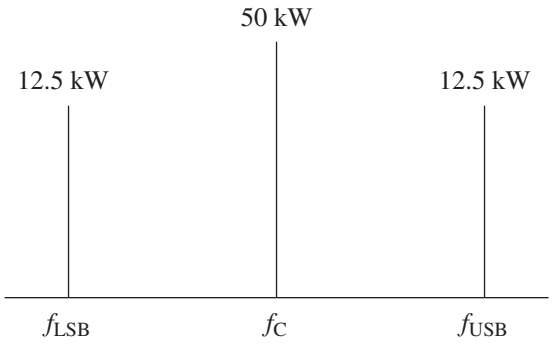


An SSB transmitter with peak power equal to one AM sideband would transmit 12.5 kW.

$$10 \log\left(\frac{200}{12.5}\right) = 12 \text{ dB}$$

This means that to have the same overall effectiveness, an AM system must transmit 10 to 12 dB more power than SSB. Some controversy exists on this issue because of the many variables that affect the savings. Suffice it to say that a 10-W SSB transmission is at least equivalent to the 100-W AM transmission (10-dB difference).



# 2 Sideband Generation: The Balanced Modulator

The purpose of a **balanced modulator** is to suppress (cancel) the carrier, leaving only the two sidebands. Such a signal is called a DSBSC **(double-sideband suppressed carrier)** signal. A very common balanced modulator is shown in Figure 1. It is sometimes called a **balanced ring modulator** or simply a **ring modulator** and sometimes a **lattice modulator.** Consider the carrier with the instantaneous conventional current flow as indicated by the arrows. The current flow through both halves of $L_5$ is equal but opposite, and thus the carrier is canceled in the output. This is also true on the carrier's other half-cycle, only now diodes *B* and *C* conduct instead of *A* and *D*.

Considering just the modulating signal, current flow occurs from winding $L_2$ through diodes *C* and *D* or *A* and *B* but not through $L_5$. Thus, there is no output of the modulating signal either. Now with both signals applied, but with the carrier amplitude much greater than the modulating signal, the conduction is determined by the polarity of the carrier. The modulating signal either aids or opposes this conduction. When the modulating signal is applied, current will flow from $L_2$ and diode *D* will conduct more than *A*, and the current balance in winding $L_5$ is upset. This causes outputs of the desired sidebands but continued suppression of the carrier. This modulator is capable of 60 dB carrier suppression when carefully matched diodes are utilized. It relies on the nonlinearity of the diodes to generate the sum and difference sideband signals.

**Balanced Modulator**
modulator stage that mixes intelligence with the carrier to produce both sidebands with the carrier eliminated

**Double-Sideband Suppressed Carrier**
output signal of a balanced modulator

**Balanced Ring Modulator**
balanced modulator design that connects four matched diodes in a ring configuration

**Ring Modulator**
another name for balanced ring modulator

**Lattice Modulator**
another name for balanced ring modulator

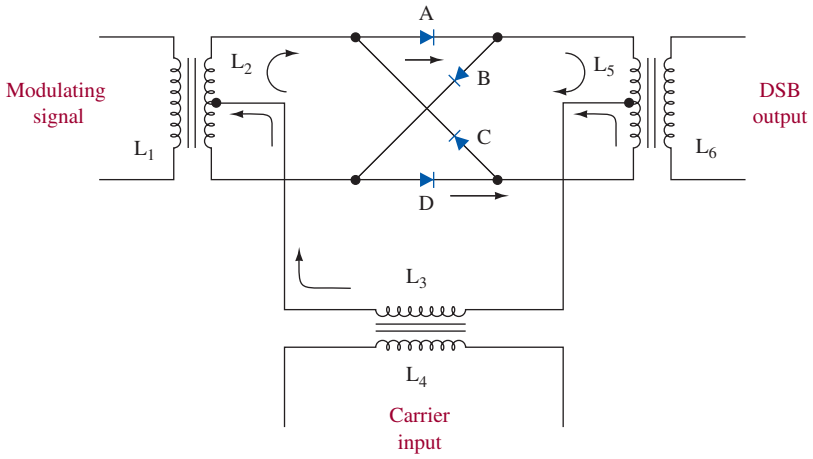


FIGURE 1 Balanced ring modulator.

## LIC Balanced Modulator

A balanced modulator of the type previously explained requires extremely well matched components to provide good suppression of the carrier (40 or 50 dB suppression is usually adequate). This suggests the use of LICs because of the superior component-matching characteristics obtainable when devices are fabricated on the same silicon chip. A number of devices specially formulated for balanced modulator applications are available. A data sheet for the AD 630 is provided in Figure 2.

ANALOG DEVICES

# Balanced Modulator/Demodulator

## AD630

**FEATURES**
**Recovers Signal from +100 dB Noise**
**2 MHz Channel Bandwidth**
**45 V/μs Slew Rate**
**–120 dB Crosstalk @ 1 kHz**
**Pin Programmable Closed Loop Gains of ±1 and ±2**
**0.05% Closed Loop Gain Accuracy and Match**
**100 μV Channel Offset Voltage (AD630BD)**
**350 kHz Full Power Bandwidth**
**Chips Available**

**FUNCTIONAL BLOCK DIAGRAM**

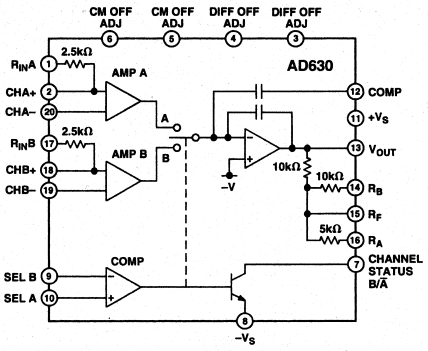


**PRODUCT DESCRIPTION**

The AD630 is a high precision balanced modulator which combines a flexible commutating architecture with the accuracy and temperature stability afforded by laser wafer trimmed thin-film resistors. Its signal processing applications include balanced modulation and demodulation, synchronous detection, phase detection, quadrature detection, phase sensitive detection, lock-in amplification and square wave multiplication. A network of on-board applications resistors provides precision closed loop gains of ±1 and ±2 with 0.05% accuracy (AD630B). These resistors may also be used to accurately configure multiplexer gains of +1, +2, +3 or +4. Alternatively, external feedback may be employed allowing the designer to implement his own high gain or complex switched feedback topologies.

The AD630 may be thought of as a precision op amp with two independent differential input stages and a precision comparator which is used to select the active front end. The rapid response time of this comparator coupled with the high slew rate and fast settling of the linear amplifiers minimize switching distortion. In addition, the AD630 has extremely low crosstalk between channels of –100 dB @ 10 kHz.

The AD630 is intended for use in precision signal processing and instrumentation applications requiring wide dynamic range. When used as a synchronous demodulator in a lock-in amplifier configuration, it can recover a small signal from 100 dB of interfering noise (see lock-in amplifier application). Although optimized for operation up to 1 kHz, the circuit is useful at frequencies up to several hundred kilohertz.

Other features of the AD630 include pin programmable frequency compensation, optional input bias current compensation resistors, common-mode and differential-offset voltage adjustment, and a channel status output which indicates which of the two differential inputs is active. This device is now available to Standard Military Drawing (DESC) numbers 5962-8980701RA and 5962-89807012A.

**PRODUCT HIGHLIGHTS**

1. The configuration of the AD630 makes it ideal for signal processing applications such as: balanced modulation and demodulation, lock-in amplification, phase detection, and square wave multiplication.
2. The application flexibility of the AD630 makes it the best choice for many applications requiring precisely fixed gain, switched gain, multiplexing, integrating-switching functions, and high-speed precision amplification.
3. The 100 dB dynamic range of the AD630 exceeds that of any hybrid or IC balanced modulator/demodulator and is comparable to that of costly signal processing instruments.
4. The op-amp format of the AD630 ensures easy implementation of high gain or complex switched feedback functions. The application resistors facilitate the implementation of most common applications with no additional parts.
5. The AD630 can be used as a two channel multiplexer with gains of +1, +2, +3, or +4. The channel separation of 100 dB @ 10 kHz approaches the limit which is achievable with an empty IC package.
6. The AD630 has pin-strappable frequency compensation (no external capacitor required) for stable operation at unity gain without sacrificing dynamic performance at higher gains.
7. Laser trimming of comparator and amplifying channel offsets eliminates the need for external nulling in most cases.

REV. D

Information furnished by Analog Devices is believed to be accurate and reliable. However, no responsibility is assumed by Analog Devices for its use, nor for any infringements of patents or other rights of third parties that may result from its use. No license is granted by implication or otherwise under any patent or patent rights of Analog Devices.

One Technology Way, P.O. Box 9106, Norwood, MA 02062-9106, U.S.A.
Tel: 781/329-4700 www.analog.com
Fax: 781/326-8703 © Analog Devices, Inc., 2001

FIGURE 2 The Analog Devices AD630 balanced modulator/demodulator. (Courtesy of Analog Devices.)

# AD630–SPECIFICATIONS (@ 25°C and $\pm V_S = \pm 15$ V unless otherwise noted.)

| Model | AD630J/A | | | AD630K/B | | | AD630S | | | Unit |
|---|---|---|---|---|---|---|---|---|---|---|
| | Min | Typ | Max | Min | Typ | Max | Min | Typ | Max | |
| GAIN | | | | | | | | | | |
| Open Loop Gain | 90 | 110 | | 100 | 120 | | 90 | 110 | | dB |
| ±1, ±2 Closed Loop Gain Error | | 0.1 | | | | 0.05 | | 0.1 | | % |
| Closed Loop Gain Match | | 0.1 | | | | 0.05 | | 0.1 | | % |
| Closed Loop Gain Drift | | 2 | | | 2 | | | 2 | | ppm/°C |
| CHANNEL INPUTS | | | | | | | | | | |
| $V_{IN}$ Operational Limit[1] | $(-V_S + 4\ V)$ to $(+V_S - 1\ V)$ | | | $(-V_S + 4\ V)$ to $(+V_S - 1\ V)$ | | | $(-V_S + 4\ V)$ to $(+V_S - 1\ V)$ | | | Volts |
| Input Offset Voltage | | | 500 | | | 100 | | | 500 | µV |
| Input Offset Voltage | | | | | | | | | | |
| $T_{MIN}$ to $T_{MAX}$ | | | 800 | | | 160 | | | 1000 | µV |
| Input Bias Current | | 100 | 300 | | 100 | 300 | | 100 | 300 | nA |
| Input Offset Current | | 10 | 50 | | 10 | 50 | | 10 | 50 | nA |
| Channel Separation @ 10 kHz | | 100 | | | 100 | | | 100 | | dB |
| COMPARATOR | | | | | | | | | | |
| $V_{IN}$ Operational Limit[1] | $(-V_S + 3\ V)$ to $(+V_S - 1.5\ V)$ | | | $(-V_S + 3\ V)$ to $(+V_S - 1.5\ V)$ | | | $(-V_S + 3\ V)$ to $(+V_S - 1.3\ V)$ | | | Volts |
| Switching Window | | | ±1.5 | | | ±1.5 | | | ±1.5 | mV |
| Switching Window | | | | | | | | | | |
| $T_{MIN}$ to $T_{MAX}$ | | | ±2.0 | | | ±2.0 | | | ±2.5 | mV |
| Input Bias Current | | 100 | 300 | | 100 | 300 | | 100 | 300 | nA |
| Response Time (–5 mV to +5 mV Step) | | 200 | | | 200 | | | 200 | | ns |
| Channel Status | | | | | | | | | | |
| $I_{SINK}$ @ $V_{OL} = -V_S + 0.4\ V$[2] | 1.6 | | | 1.6 | | | 1.6 | | | mA |
| Pull-Up Voltage | | | $(-V_S + 33\ V)$ | | | $(-V_S + 33\ V)$ | | | $(-V_S + 33\ V)$ | Volts |
| DYNAMIC PERFORMANCE | | | | | | | | | | |
| Unity Gain Bandwidth | | 2 | | | 2 | | | 2 | | MHz |
| Slew Rate[3] | | 45 | | | 45 | | | 45 | | V/µs |
| Settling Time to 0.1% (20 V Step) | | 3 | | | 3 | | | 3 | | µs |
| OPERATING CHARACTERISTICS | | | | | | | | | | |
| Common-Mode Rejection | 85 | 105 | | 90 | 110 | | 90 | 110 | | dB |
| Power Supply Rejection | 90 | 110 | | 90 | 110 | | 90 | 110 | | dB |
| Supply Voltage Range | ±5 | | ±16.5 | ±5 | | ±16.5 | ±5 | | ±16.5 | Volts |
| Supply Current | | 4 | 5 | | 4 | 5 | | 4 | 5 | mA |
| OUTPUT VOLTAGE, @ $R_L = 2\ k\Omega$ | | | | | | | | | | |
| $T_{MIN}$ to $T_{MAX}$ | ±10 | | | ±10 | | | ±10 | | | Volts |
| Output Short Circuit Current | | 25 | | | 25 | | | 25 | | mA |
| TEMPERATURE RANGES | | | | | | | | | | |
| Rated Performance–N Package | 0 | | 70 | 0 | | 70 | | N/A | | °C |
| D Package | –25 | | +85 | –25 | | +85 | –55 | | +125 | °C |

NOTES
[1]If one terminal of each differential channel or comparator input is kept within these limits the other terminal may be taken to the positive supply.
[2]$I_{SINK}$ @ $V_{OL} = (-V_S + 1)$ volt is typically 4 mA.
[3]Pin 12 Open. Slew rate with Pins 12 and 13 shorted is typically 35 V/µs.
Specifications subject to change without notice.

## AD630

**APPLICATIONS: BALANCED MODULATOR**

Perhaps the most commonly used configuration of the AD630 is the balanced modulator. The application resistors provide precise symmetric gains of ±1 and ±2. The ±1 arrangement is shown in Figure 9a and the ±2 arrangement is shown in Figure 9b. These cases differ only in the connection of the 10 kΩ feedback resistor (Pin 14) and the compensation capacitor (Pin 12). Note the use of the 2.5 kΩ bias current compensation resistors in these examples. These resistors perform the identical function in the ±1 gain case. Figure 10 demonstrates the performance of the AD630 when used to modulate a 100 kHz square wave carrier with a 10 kHz sinusoid. The result is the double sideband suppressed carrier waveform.

These balanced modulator topologies accept two inputs, a signal (or modulation) input applied to the amplifying channels, and a reference (or carrier) input applied to the comparator.

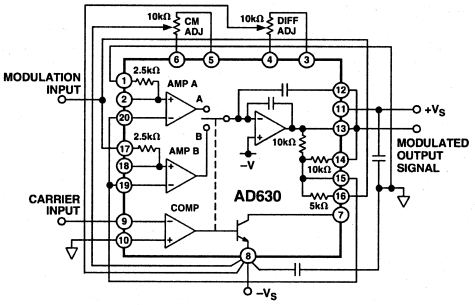


*Figure 9a. AD630 Configured as a Gain-of-One Balanced Modulator*

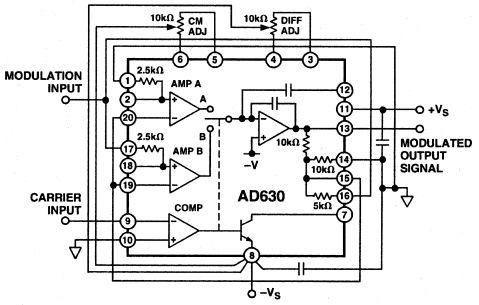


*Figure 9b. AD630 Configured as a Gain-of-Two Balanced Modulator*

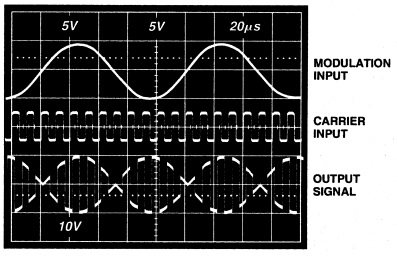


*Figure 10. Gain-of-Two Balanced Modulator Sample Waveforms*

FIGURE 2 *(Continued)*

As shown in the data sheet, this approach does not require the use of transformers or tuned circuits. The balanced modulator function is achieved with matched transistors in the differential amplifiers, with the modulating signal controlling the emitter current of the "diff-amps." The carrier signal is applied to switch the diff-amps' bases, resulting in a mixing process with the mixing product signals out of phase at the collectors. This is an extremely versatile device since it can be used not only as a balanced modulator but also as an amplitude modulator, synchronous detector, FM detector, or frequency doubler.



## 3 SSB Filters

Once the carrier has been eliminated, it is necessary to cancel one of the sidebands without affecting the other one. This requires a sharply defined filter, as Figure 3 helps illustrate. Voice transmission requires audio frequencies from about 100 Hz to 3 kHz. Therefore, the upper and lower sidebands generated by the balanced modulator are separated by 200 Hz, as shown in Figure 3.

The required $Q$ depends on the center or carrier frequency, $f_c$; the separation between the two sidebands, $\Delta f$; and the desired attenuation level of the unwanted sideband. It can be calculated from

$$Q = \frac{f_c(\log^{-1} \text{dB}/20)^{1/2}}{4\Delta f} \tag{1}$$

where dB is the suppression of the unwanted sideband.

**Example 1**

*Calculate the required Q for the situation depicted in Figure 3 for*
*(a) A 1-MHz carrier and 80-dB sideband suppression.*
*(b) A 100-kHz carrier and 80-dB sideband suppression.*

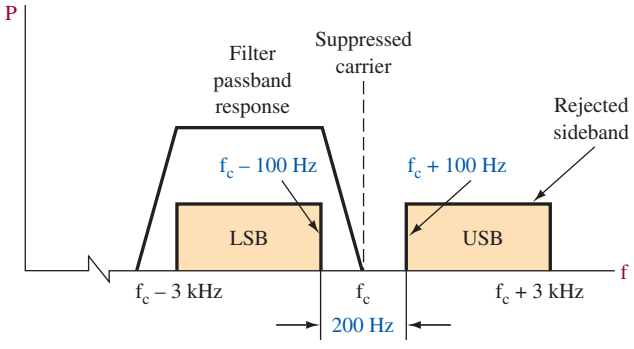


FIGURE 3 Sideband suppression.

**Solution**

(a)
$$Q = \frac{f_c(\log^{-1} \text{dB}/20)^{1/2}}{4\Delta f} \quad \textbf{(1)}$$
$$= \frac{1 \text{ MHz}(\log^{-1} 80/20)^{1/2}}{4 \times 200 \text{ Hz}} = \frac{1 \times 10^6(10^4)^{1/2}}{800}$$
$$= \frac{1 \times 10^8}{8 \times 10^2} = 125{,}000$$

(b)
$$Q = \frac{100 \text{ kHz}(\log^{-1} 80/20)^{1/2}}{4 \times 200 \text{ Hz}}$$
$$= \frac{10^7}{8 \times 10^2} = 12{,}500$$

A practical consequence of the preceding example is that the SSB signal would be generated around the lower 100-kHz carrier in conjunction with a crystal filter. Then, after removing one sideband, an additional frequency translation is usually employed to get the sideband up to the desired frequency range. This is accomplished with a mixer circuit.

Both SSB transmitters and receivers require selective bandpass filters in the region of 100 to 500 kHz. In receivers a high order of adjacent channel rejection is required if channels are to be closely spaced to conserve spectrum space. The filter used, therefore, must have very steep skirt characteristics (fast roll-off) and a flat bandpass characteristic to pass all frequencies in the band equally well. These filter requirements are met by crystal filters, ceramic filters, and mechanical filters. A fourth type of high-$Q$ filter of more recent popularity is the **surface acoustic wave** (SAW) **filter.** It is often used in TV and radar applications. It is most applicable to higher frequencies than are typically used in SSB systems.

**Surface Acoustic Wave Filter**
an extremely high-Q filter often used in TV and radar applications

## Crystal Filters

The crystal filter is commonly used in single-sideband systems to attenuate the unwanted sideband. Because of its very high $Q$, the crystal filter passes a much narrower band of frequencies than the best $LC$ filter. Crystals with a $Q$ up to about 50,000 are available.

The equivalent circuit of the crystal and crystal holder is illustrated in Figure 4(a). The components $L_s$, $C_s$, and $R_s$ represent the series resonant circuit of the crystal itself. $C_p$ represents the parallel capacitance of the crystal holder. The crystal offers a very low-impedance path to the frequency to which it is resonant and a high-impedance path to other frequencies. However, the crystal holder capacitance, $C_p$, shunts the crystal and offers a path to other frequencies. For the crystal to operate as a bandpass filter, some means must be provided to counteract the shunting effect of the crystal holder. This is accomplished by placing an external variable capacitor in the circuit [$C_1$ in Figure 4(b)].

In Figure 4(b), a simple bandpass crystal filter is shown. The variable capacitor $C_1$, called the **phasing capacitor,** counteracts holder capacitance $C_p$. $C_1$ can be adjusted so that its capacitance equals the capacitance of $C_p$. Then both $C_p$ and $C_1$ pass undesired frequencies equally well. Because of the circuit arrangement, the voltages across $C_p$ and $C_1$ due to undesired frequencies are equal and 180° out of

**Phasing Capacitor**
cancels the effect of another capacitance by a 180° phase difference

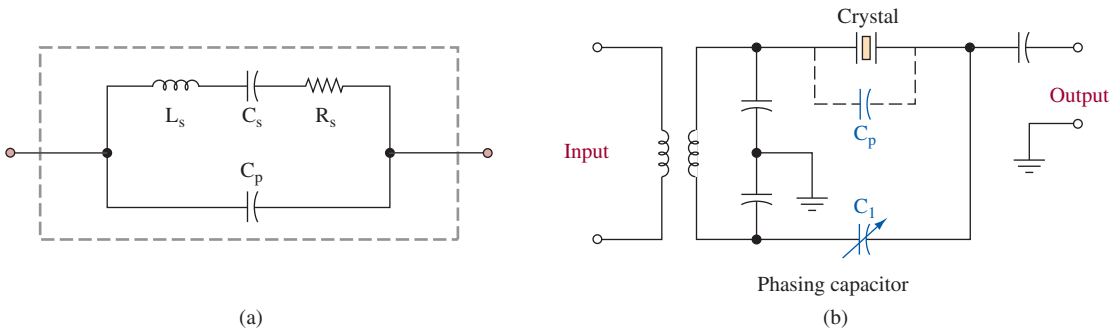


FIGURE 4 Crystal equivalent circuit (a) and filter (b).

**Rejection Notch**
a narrow range of frequencies attenuated by a filter, which can be tuned to minimize interference

phase. Therefore, undesirable frequencies are canceled and do not appear in the output. This cancellation effect is called the **rejection notch.**

For circuit operation, assume that a lower sideband with a maximum frequency of 99.9 kHz and an upper sideband with a minimum frequency of 100.1 kHz are applied to the input of the crystal filter in Figure 4(b). Assume that the upper sideband is the unwanted sideband. By selecting a crystal that will provide a low-impedance path (series resonance) at about 99.9 kHz, the lower-sideband frequency will appear in the output. The upper sideband, as well as all other frequencies, will have been attenuated by the crystal filter. Improved performance is possible when two or more crystals are combined in a single filter circuit.

## Ceramic Filters

Ceramic filters utilize the piezoelectric effect just as crystals do. However, they are normally constructed from lead zirconate-titanate. While ceramic filters do not offer *Q*s as high as a crystal, they do outperform *LC* filters in that regard. A *Q* of up to 2000 is practical with ceramic filters. They are lower in cost, more rugged, and

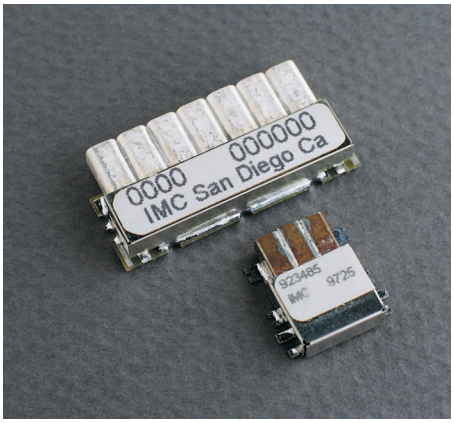


Ceramic filters. (Courtesy of Integrated Microwave Corporation, San Diego, CA.)

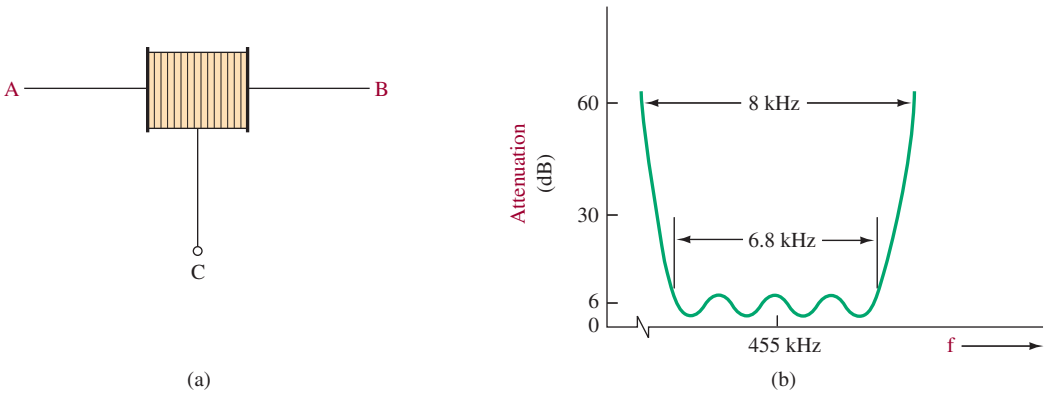


FIGURE 5 Ceramic filter and response curve.

smaller in size than crystal filters. They are used not only as sideband filters but also as replacements for the tuned IF transformers for superheterodyne receivers.

The circuit symbol for a ceramic filter is shown in Figure 5(a) and a typical attenuation response curve is shown in Figure 5(b). Note that the bandwidths at 60 dB and at 6 dB are shown. The ratio of these two bandwidths (8 kHz/6.8 kHz = 1.18) is defined as the **shape factor.** The shape factor (60-dB BW divided by a 6-dB BW) provides an indication of the filter's selectivity. The ideal value of 1 would indicate a vertical slope at both frequency extremes. The ideal filter would have a horizontal slope within the passband with zero attenuation. The practical case is shown in Figure 5(b), where a variation is illustrated. This variation is termed the **peak-to-valley ratio** or **ripple amplitude.** The shape factor and ripple amplitude characteristics also apply to the mechanical filters discussed next.

**Shape Factor**
ratio of the 60-dB and 6-dB bandwidths of a high-*Q* bandpass filter

**Peak-to-Valley Ratio**
another name for ripple amplitude

**Ripple Amplitude**
variation in attenuation of a sharp bandpass filter within its 6-dB bandwidths

## Mechanical Filters

Mechanical filters have been used in single-sideband equipment since the 1950s. Some of the advantages of mechanical filters are their excellent rejection characteristics, extreme ruggedness, size small enough to be compatible with the miniaturization of equipment, and a *Q* in the order of 10,000, which is about 50 times that obtainable with *LC* filters.

The mechanical filter is a device that is mechanically resonant; it receives electrical energy, converts it to mechanical vibration, then converts this mechanical energy back into electrical energy as the output. Figure 6 shows a cutaway view of a typical unit. There are four elements constituting a mechanical filter: (1) an input transducer that converts the electrical energy at the input into mechanical vibrations, (2) metal disks that are manufactured to be mechanically resonant at the desired frequency, (3) rods that couple the metal disks, and (4) an output transducer that converts the mechanical vibrations back into electrical energy.

Not all the disks are shown in the illustration. The shields around the transducer coils have been cut away to show the coil and magnetostrictive driving rods. As you can see by its symmetrical construction, either end of the filter may be used as the input.

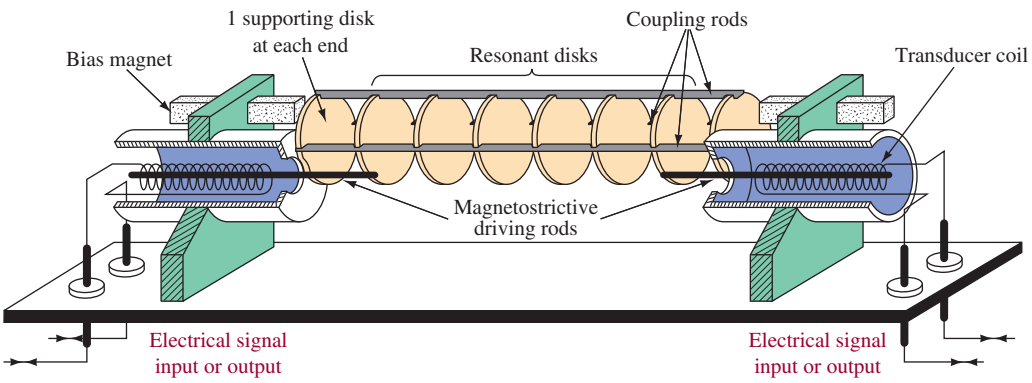


FIGURE 6 Mechanical filter.

Figure 7 is the electrical equivalent of the mechanical filter. The disks of the mechanical filter are represented by the series resonant circuits $L_1C_1$ while $C_2$ represents the coupling rods. The resistance $R$ in both the input and output represents the matching mechanical loads. Phase shift of the input signal is introduced by the $L$ and C components of the mechanical filter. For digital applications, a phase shift can affect the quality of the digital pulse. This can lead to an increase in data errors or bit errors. In analog systems, the voice transmission is not affected as much because the ear is very forgiving of distortion.

Let us assume that the mechanical filter of Figure 6 has disks tuned to pass the frequencies of the desired sideband. The input to the filter contains both sidebands, and the transducer driving rod applies both sidebands to the first disk. The vibration of the disk will be greater at a frequency to which it is tuned (resonant frequency), which is the desired sideband, than at the undesired sideband frequency. The mechanical vibration of the first disk is transferred to the second disk, but a smaller percentage of the unwanted sideband frequency is transferred. Each time the vibrations are transferred from one disk to the next, there is a smaller amount of the unwanted sideband. At the end of the filter there is practically none of the undesired sideband left. The desired sideband frequencies are taken off the transducer coil at the output end of the filter.

Varying the size of $C_2$ in the electrical equivalent circuit in Figure 7 varies the bandwidth of the filter. Similarly, by varying the mechanical coupling between the disks (Figure 6), that is, by making the coupling rods either larger or smaller,

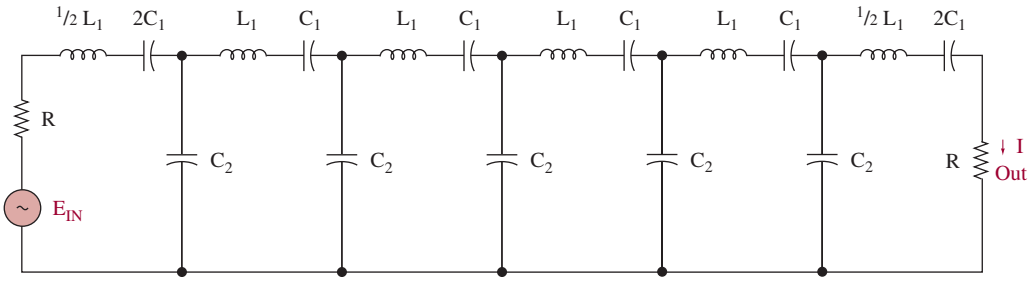


FIGURE 7 Electrical analogy of a mechanical filter.

the bandwidth of the mechanical filter is varied. Because the bandwidth varies approximately as the total cross-sectional area of the coupling rods, the bandwidth of the mechanical filter can be increased by using either larger coupling rods or more coupling rods. Mechanical filters with bandwidths as narrow as 500 Hz and as wide as 35 kHz are practical in the range 100 to 500 kHz.



## 4 SSB Transmitters

### Filter Method

Figure 8 is a block diagram of a modern single-sideband transmitter using a balanced modulator to generate DSB and the filter method of eliminating one of the sidebands. For illustrative purposes, a single-tone 2000-Hz intelligence signal is used, but it is normally a complex intelligence signal, such as that produced by the human voice.

A 9-MHz crystal frequency is used because of the excellent operating characteristics of monolithic filters at that frequency. The 2-kHz signal is amplified and mixed with a 9-MHz carrier **(conversion frequency)** in the balanced modulator. Remember, neither the carrier nor audio frequencies appear in the output of the balanced modulator; the sum and difference frequencies (9 MHz ± 2 kHz) are its output. As illustrated in Figure 8, the two sidebands from the balanced modulator are applied to the filter. Only the desired upper sideband is passed. The dashed lines show that the carrier and lower sideband have been removed.

**Conversion Frequency**
another name for the carrier in a balanced modulator

The output of the first balanced modulator is filtered and mixed again with a new conversion frequency to adjust the output to the desired transmitter frequency.

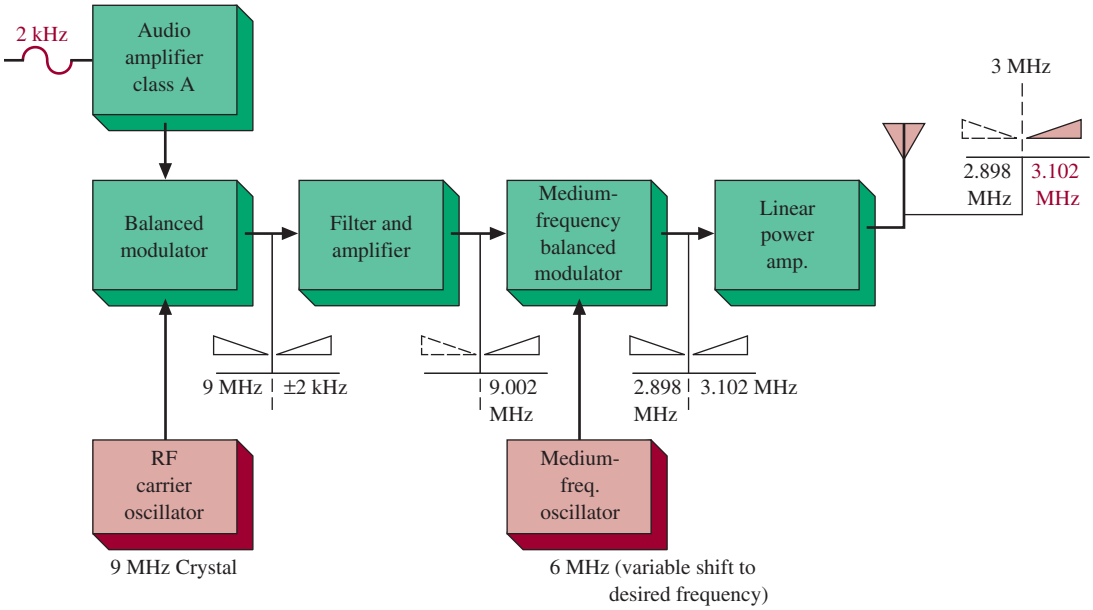


FIGURE 8 SSB transmitter block diagram.

After mixing the two inputs to get two new sidebands, the balanced modulator removes the new 3-MHz carrier and applies the two new sidebands (3102 kHz and 2898 kHz) to a tunable linear power amplifier.

**Example 2**

*For the transmitter system shown in Figure 8, determine the filter Q required in the linear power amplifier.*

**Solution**

The second balanced modulator created another DSB signal from the SSB signal of the preceding high-$Q$ filter. However, the frequency translation of the second balanced modulator means that a low-quality filter can be used once again to create SSB. The new DSB signal is at about 2.9 MHz and 3.1 MHz. The required filter $Q$ is

$$\frac{3 \text{ MHz}}{3.1 \text{ MHz} - 2.9 \text{ MHz}} = \frac{3 \text{ MHz}}{0.2 \text{ MHz}} = 15$$

The input and output circuits of the linear power amplifier are tuned to reject one sideband and pass the other to the antenna for transmission. A standard *LC* filter is now adequate to remove one of the two new sidebands. The new sidebands are about 200 kHz apart ( $\simeq$ 3100 kHz − 2900 kHz), so the required $Q$ is quite low. (See Example 2 for further illustration.) The high-frequency oscillator is variable so that the transmitter output frequency can be varied over a range of transmitting frequencies. Since both the carrier and one sideband have been eliminated, all the transmitted energy is in the single sideband.

## Filter SSB Generator

The circuit shown in Figure 9 provides a complete, practical SSB generator. Its output is at 9 MHz and can be heterodyned to any desired frequency. The audio signal is amplified by a 741 op amp (U1). Its output is applied to the gates of $Q_1$. The balanced modulator is formed by the $Q_1$–$Q_2$ combination. The balance for maximum carrier suppression is made by adjusting $R_2$. The required 180° phase difference for the drains of $Q_1$ and $Q_2$ is provided by transformer $T_1$. It also couples the balanced modulator output into the IF preamplifier, $Q_3$. The SSB output is filtered by a prepackaged crystal-lattice filter at the collector of $Q_3$. A **crystal-lattice filter** contains at least two but usually four crystals. It offers a wider possible passband than a single-crystal filter.

**Crystal-Lattice Filter**
filter containing at least two but usually four crystals

The carrier is generated with either crystal $Y_1$ (usb) or $Y_2$ (lsb). The oscillator's output at the drain of $Q_5$ is amplified by $Q_6$, which allows 4-V p-p injection into the sources of balanced modulation transistors $Q_1$ and $Q_2$. Fine adjustment of carrier frequency is accomplished with trimmer capacitors $C_1$ or $C_2$. They are adjusted to just "fit" the desired sideband into the passband of $FL_1$ and thus attenuate the undesired sideband and any vestige of the carrier that is already suppressed 45 to 50 dB by the balanced modulator.

**Continuous Wave**
undamped sinusoidal waveform produced by an oscillator in a radio transmitter

**Continuous wave** (CW) operation is also possible with this system. CW is telegraphy by on–off keying of a carrier. It is the oldest radio modulation system and simply means either to transmit a carrier or not, representing a mark or space

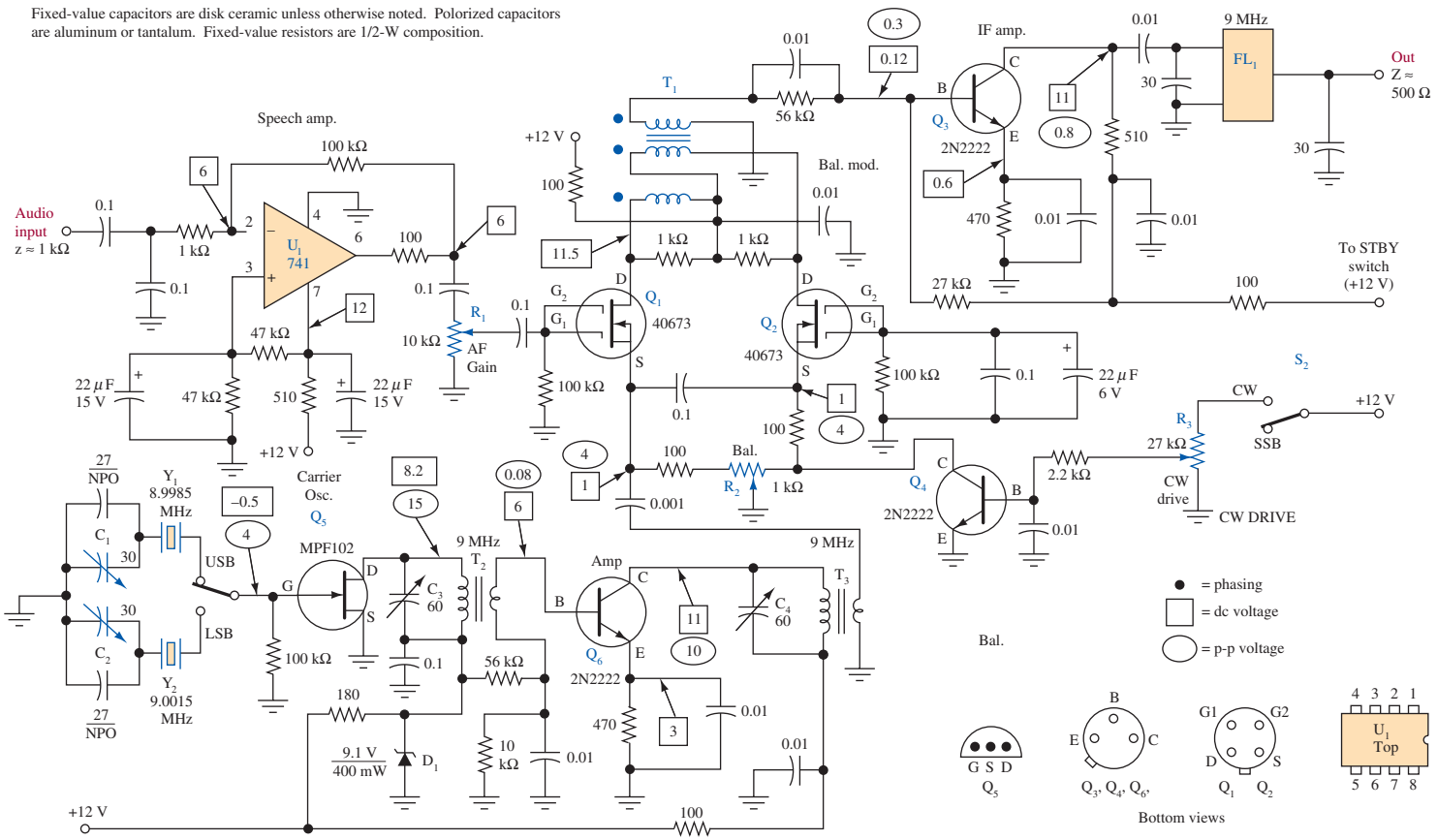


$C_1$, $C_2$–Miniature 30-pF trimmer, NPO ceramic preferred.
$C_3$, $C_4$–Miniature 60-pF trimmer, Mica compression type suitable.
$D_1$–9.1-V, 400-mW Zener diode.
$FL_1$–Spectrum International 9-MHz crystal-lattice filter. Type XF-9A.

$R_1$–10-kΩ audio taper control, panel mounted.
$R_2$–100-Ω PC-board-mount control.
$R_3$–25-kΩ linear-taper control, panel mounted.
$S_1$, $S_2$–SPDT miniature switch, panel mounted.

$T_1$–15 trifilar turns of No. 26 enameled wire (twist 10 times per inch) on an FT-50-61 toroidal core ($\mu_c$ = 125, dia = 0.5 inch).
$T_2$–10-$\mu$H primary. 44 turns No. 26 enameled wire on a T50-2 iron core. $\mu_c$ = 10, dia = 0.5 in. Link has 10 turns No. 30 insulated wire over $D_1$ end of primary.

$T_3$–10-$\mu$H primary, 44 turns of No. 26 enameled wire on a T50-2 iron core. Link has 22 turns of No. 30 insulated wire over cold end of primary.
$Y_1$, $Y_2$–Crystals to match $FL_1$. Obtain from filter manufacturer International Crystal Mfg. Co.

**FIGURE 9** SSB generator-filter method. (From the *ARRL Handbook*, courtesy of the American Radio Relay League.)

in telegraphy. For CW operation, $S_2$ is switched to the CW position, which activates $Q_4$ as a variable dc attenuator. $R_3$ is varied to change the bias of $Q_4$, which then shifts $Q_2$'s source voltage to permit carrier insertion.

## Phase Method

The phase method of SSB generation offers the following advantages over the filter method:

1. There is greater ease in switching from one sideband to the other.
2. SSB can be generated directly at the desired transmitting frequency, which means that intermediate balanced modulators are not necessary.
3. Lower intelligence frequencies can be economically used because a high-$Q$ filter is not necessary.

Despite these advantages, the filter method is rather firmly entrenched for many systems because of adequate performance and the complexity of the phase method. The increased availability of special LICs in the past has increased SSB designs using the phase method.

The phase method of SSB generation relies on the fact that the upper and lower sidebands of an AM signal differ in the sign of their phase angles. This means that phase discrimination may be used to cancel one sideband of the DSB signal.

Consider a modulating signal $f(t)$ to be a pure cosine wave. A resulting balanced modulator output (DSB) can then be written as

$$f_{\text{DSB1}}(t) = (\cos \omega_i t)(\cos \omega_c t) \tag{2}$$

where $\cos \omega_i t$ is the intelligence signal and $\cos \omega_c t$ the carrier. The term $\cos A \cos B$ is equal to $\frac{1}{2}[\cos (A + B) + \cos(A - B)]$ by trigonometric identity, and therefore Equation (2) can be rewritten as

$$f_{\text{DSB1}}(t) = \frac{1}{2}[\cos(\omega_c + \omega_i)t + \cos(\omega_c - \omega_i)t] \tag{3}$$

If another signal,

$$f_{\text{DSB2}}(t) = \frac{1}{2}[\cos(\omega_c - \omega_i)t - \cos(\omega_c + \omega_i)t] \tag{4}$$

were added to Equation (3), the upper sideband would be canceled, leaving just the lower sideband,

$$f_{\text{DSB1}}(t) + f_{\text{DSB2}}(t) = \cos(\omega_c - \omega_i)t$$

Since the signal in Equation (4) is equal to

$$\sin \omega_i t \sin \omega_c t$$

by trigonometric identity, it can be generated by shifting the phase of the carrier and intelligence signal by exactly 90° and then feeding them into a balanced modulator. Recall that sine and cosine waves are identical except for a 90° phase difference.

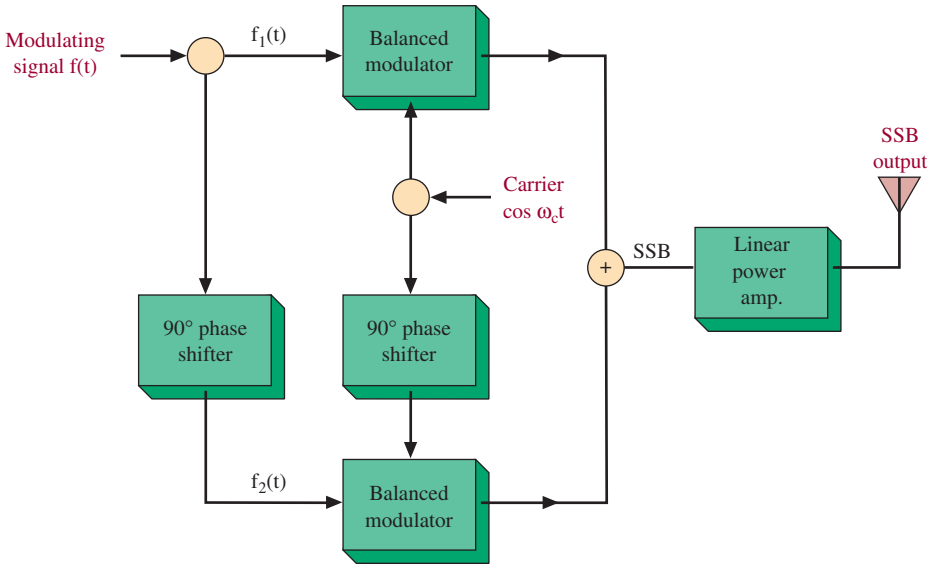


FIGURE 10 Phase-shift SSB generator.

A block diagram for the system just described is shown in Figure 10. The upper balanced modulator receives the carrier and intelligence signals directly, while the lower balanced modulator receives both of them shifted in phase by 90°. Thus, combining the outputs of both balanced modulators in the adder results in an SSB output that is subsequently amplified and then driven into the transmitting antenna.

A major disadvantage of this system is the 90° phase-shifting network required for the intelligence signal. The *carrier* 90° phase shift is easily accomplished because of its single-frequency nature, but the audio signal covers a wide range of frequencies. To obtain exactly 90° of phase shift for a complete range of frequencies is difficult. The system is critical inasmuch as an 88° phase shift (2° error) for a given audio frequency results in about 30 dB of unwanted sideband suppression instead of the desired complete suppression obtained at 90° phase shift. The difficulty in obtaining adequate performance of the intelligence phase-shifting network is becoming less of a problem with the newer LICs designed to address this situation.

## ACSSB Systems

Amplitude compandoring (**com**pression-ex**pandor**) single-sideband (ACSSB) systems are now allowing narrowband voice communications with the performance of FM systems for the land-mobile communications industry. This equivalent performance is provided with less than one-third the bandwidth of the comparable FM systems. The basis of ACSSB is to compress the audio before modulation and to expand it following demodulation at the receiver. A commonly used method to achieve this is use of the SA571 compandor LIC. It is shown in Figure 11 connected as an expandor. This IC has a unity gain for a 0-dBm input. When used as a compressor, all negative dBm power levels are increased and positive dBm powers are decreased. For example, −40 dBm becomes −20 dBm, +15

**Compandor**
compress/expand; to provide better noise performance, a variable-gain circuit at the transmitter increases its gain for low-level signals; a complementary circuit in the receiver reverses the process to restore the original signal

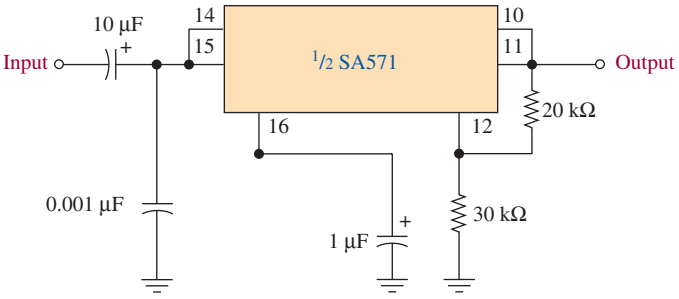


FIGURE 11 Amplitude expandor circuit.

dBm becomes +7.5 dBm, and so on. The expandor reverses the process to restore the signal's original dynamic range. Thus, a −20 dBm to +7.5 dBm signal becomes −40 dBm to +15 dBm at the expandor's output. The only signals not changed by the 571 IC are those at 0 dBm.

This system significantly cuts down the dynamic range that must be dealt with. It allows the lower-level signals to be transmitted with greater power while remaining within the PEP ratings of the transmitter power amplifier for the highest-level signals. Thus, the *S/N* ratio is significantly improved at the lower end, while the somewhat increased noise for the louder passages (due to their reduced amplitude) is not a problem. At the receiver, the expandor restores the demodulated output to its original dynamic range.

These ACSSB systems also include a pilot carrier signal as illustrated in Figure 12. It is shown added to the audio signal sufficiently separated so that the receiver can ultimately distinguish between the two. The audio passband for voice transmission is fully attenuated by 3 kHz, and a pilot tone at 3.1 kHz above the eliminated carrier is the norm. It is suppressed by 10 dB from the maximum PEP as shown in Figure 12. Thus, the transmitter will have output power of about $\frac{1}{10}$ (−10 dB) of the maximum when there is no voice modulation. At the receiver, the pilot tone is usually compared to a reference oscillator in a phase-locked-loop (PLL) circuit. The PLL difference voltage is used to shift the receiver oscillator until error is eliminated. The pilot tone can also be used for AGC and squelch circuits at the receiver.

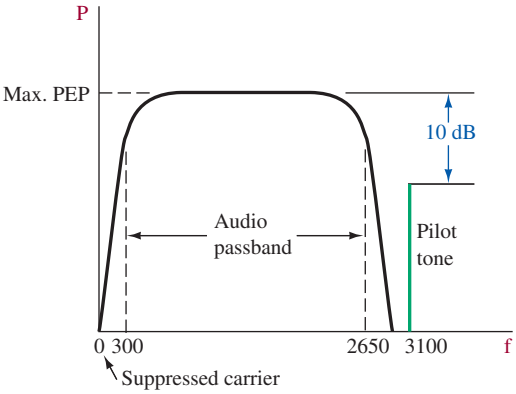


FIGURE 12 ACSSB signal.

## Transmitter Linear Power Amplifier

Once an SSB signal has been generated, a linear power amplifier is necessary to obtain significant power levels for transmission. The circuit in Figure 13 provides 140 W of PEP nominal output power from 2 to 30 MHz when supplied with about 3 W of signal input. Fairly linear outputs up to 200 W PEP are possible with increased input drive. Its simplicity and use of low-cost components makes it an attractive design for mobile transmitters. It operates on the standard 13.6 V dc available from automotive electrical systems.

The amplifier is a class AB push-pull design. The quiescent current for each MRF454 power transistor ($Q_3$ and $Q_4$) is about 500 mA. This amount of bias is

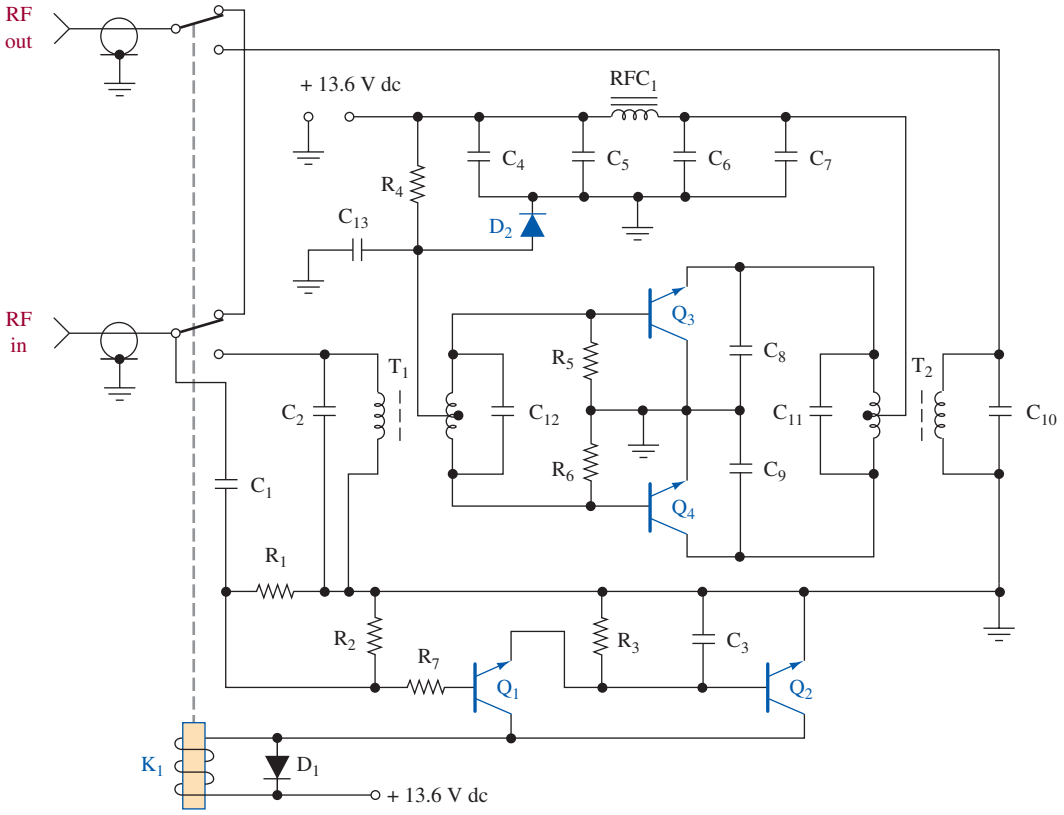


$C_1$—33 pF dipped mica
$C_2$—18 pF dipped mica
$C_3$—10 $\mu$F, 35 V dc for AM operation
100 $\mu$F, 35 V dc for SSB operation
$C_4$—0.1 $\mu$F Erie
$C_5$—10 $\mu$F, 35 V dc electrolytic
$C_6$—1 $\mu$F tantalum
$C_7$—0.001 $\mu$F Erie disk
$C_8$, $C_9$—330 pF dipped mica
$C_{10}$—24 pF dipped mica
$C_{11}$—910 pF dipped mica
$C_{12}$—1100 pF dipped mica
$C_{13}$—500 $\mu$F, 3 V dc electrolytic
$R_1$—100 k$\Omega$, 0.25 W
$R_2$—10 k$\Omega$, 0.25 W
$R_3$—10 k$\Omega$, 0.25 W
$R_4$—33 $\Omega$, 5 W wirewound
$R_5$, $R_6$—10 $\Omega$, 0.5 W
$R_7$—100 $\Omega$, 0.25 W
$RFC_1$—9 ferroxcube beads on No. 18 AWG wire
$D_1$—1N4001
$D_2$—1N4997
$Q_1$, $Q_2$—2N4401
$Q_3$, $Q_4$—MRF454
$T_1$, $T_2$—16:1 transformers
$K_1$—Potter & Brumfield KT11A 12 V dc relay or equivalent

FIGURE 13 Linear power amplifier. (Courtesy of *Microwaves and RF.*)

needed to prevent crossover distortion under high-output conditions. Diode $D_2$ is mounted on the same heat sink with the power transistors and "temperature tracks" them to provide bias adjustment with temperature changes. The relay $K_1$ and associated control circuitry, including $Q_1$ and $Q_2$, serve to "engage" the power amplifier only when RF input is present. You will analyze this function in an end-of-chapter question. Further details and circuit construction information can be obtained by requesting engineering bulletin EB63 from Motorola Semiconductor Products, Inc., P.O. Box 20912, Phoenix, AZ 85036.



## 5 SSB Demodulation

One of the major advantages of SSB for voice transmission has been shown to be the elimination of the transmitted carrier. However, this advantage does not apply to music. We have shown that this allows an increase in effective radiated power (erp) because the sidebands contain the information and the never-changing carrier is redundant. Unfortunately, even though the carrier is redundant (contains no information), it *is* needed at the receiver! Recall that the intelligence in an AM system is equal in frequency to the difference of the sideband and carrier frequencies.

### Waveforms

Figure 14(a) shows three different sine-wave intelligence signals; in Figure 14(b), the resulting AM waveforms are shown, and Figure 14(c) shows the DSB (no carrier) waveform. Notice that the DSB envelope (drawn in for illustrative purposes) looks like a full-wave rectification of the corresponding AM waveform's envelope. It is double the frequency of the AM envelope. In Figure 14(d), the SSB waveforms are simply pure sine waves. This is precisely what is transmitted in the case of a sine-wave modulating signal. These waveforms are either at the carrier plus the intelligence frequency (usb) or carrier minus intelligence frequency (lsb). An SSB receiver would have to somehow "reinsert the carrier" to enable detection of the original audio or intelligence signal. A simple way to form an SSB detector is to use a mixer stage identical to a standard AM receiver mixer. The mixer is a nonlinear device, and the local oscillator input should be equivalent to the desired carrier frequency.

### Mixer SSB Demodulator

Figure 15 shows this situation pictorially. Consider a 500-kHz carrier frequency that has been modulated by a 1-kHz sine wave. If the upper sideband were transmitted, the receiver's demodulator would see a 501-kHz sine wave at its input. Therefore, a 500-kHz oscillator input will result in a mixer output frequency component of 1 kHz, which is the desired result. If the 500-kHz oscillator is not exactly 500 kHz, the recovered intelligence will not be exactly 1 kHz. If the receiver is to be used on several specific channels, a crystal for each channel will provide the necessary stability. If the receiver is to be used over a complete band of frequencies, the variable frequency oscillator (VFO), often called the beat frequency oscillator (BFO), must have some sort of automatic frequency control (AFC) to provide adequate quality reception. This can be accomplished by including a pilot carrier signal with the transmitted SSB signal. The

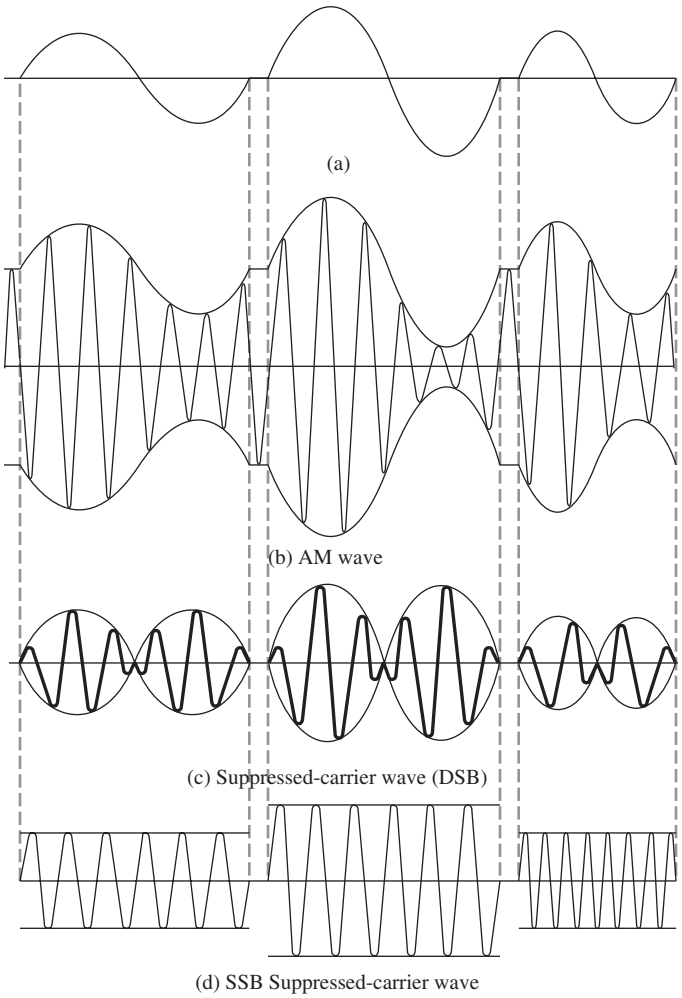


FIGURE 14 AM, DSB, and SSB waves from sinusoidal modulating signals.

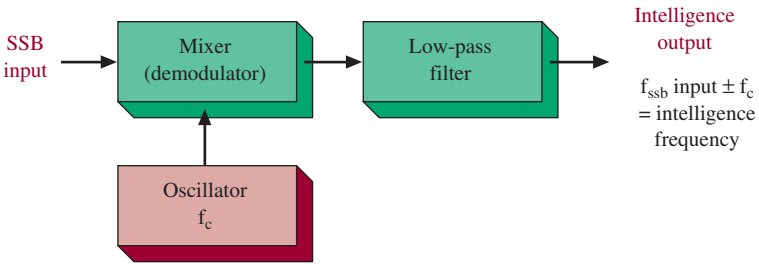


FIGURE 15 Mixer used as SSB demodulator.

pilot carrier can then be used to calibrate the receiver's oscillator at periodic intervals. Another approach is to utilize rather elaborate AFC circuits completely at the receiver, and the third possibility is the use of frequency synthesizers.

## BFO Drift Effect

In any event, even minor drifts in BFO frequency can cause serious problems in SSB reception. If the oscillator drifts ±100 Hz, a 1-kHz intelligence signal would be detected either as 1100 Hz or 900 Hz. Speech transmission requires less than a ±100-Hz shift or the talker starts sounding like Donald Duck and becomes completely unintelligible. Obtaining good-quality SSB reception of music and digital signals requires a carrier.

### Example 3

*At one instant of time, an SSB music transmission consists of a 256-Hz sine wave and its second and fourth harmonics, 512 Hz and 1024 Hz. If the receiver's demodulator oscillator has drifted 5 Hz, determine the resulting speaker output frequencies.*

#### Solution

The 5-Hz oscillator drift means that the detected audio will be 5 Hz in error, either up or down, depending on whether it is a usb or lsb transmission and on the direction of the oscillator's drift. Thus, the output would be either 251, 507, and 1019 Hz or 261, 517, and 1029 Hz. The speaker's output is no longer harmonic (exact frequency multiples), and even though it is just slightly off, the human ear would be offended by the new "music."

## Product Detector

**Product Detector** using a balanced modulator to recover the intelligence in an SSB signal

As we have discussed, to recover the intelligence in an SSB (or DSB) signal, you need to reinsert the carrier. The balanced modulators used to create DSB can also be used to recover the intelligence in an SSB signal. When a balanced modulator is used in this fashion, it is usually called a **product detector.** This is the most common method of detecting an SSB signal.

Figure 16 shows another IC balanced modulator being used as a product detector. It is the Plessey Semiconductor SL640C. The capacitor connected to output pin 5 forms the low-pass filter to allow just the audio (low)-frequency component to appear in the output. The simplicity of this demodulator makes its desirability clear.

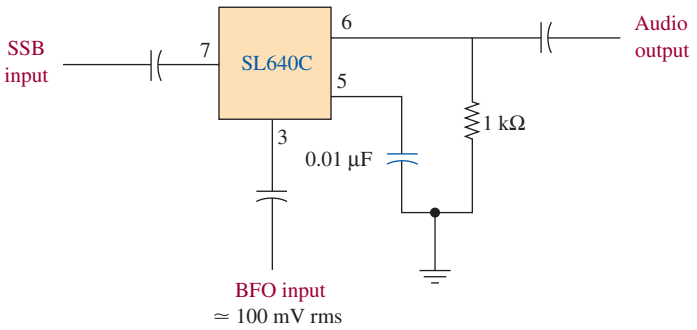


FIGURE 16 SL640C SSB detector.



## 6 SSB Receivers

To see the relationship of the parts in a single-sideband receiver, observe the block diagram in Figure 17. Basically, the receiver is similar to an ordinary AM superheterodyne receiver; that is, it has RF and IF amplifiers, a mixer, a detector, and audio amplifiers. To permit satisfactory SSB reception, however, an additional mixer (demodulator) and oscillator must replace the conventional diode detector.

### Example 4

*The SSB receiver in Figure 17 has outputs at 1 kHz and 3 kHz. The carrier used and suppressed at the transmitter was 2 MHz, and the upper sideband was utilized. Determine the exact frequencies at all stages for a 455-kHz IF frequency.*

#### Solution

| | |
|---|---|
| RF amp and first mixer input | 2000 kHz + 1 kHz = 2001 kHz<br>2000 kHz + 3 kHz = 2003 kHz |
| Local oscillator | 2000 kHz + 455 kHz = 2455 kHz |
| *First mixer output:*<br>IF amp and second mixer input (the other components attenuated by tuned circuits) | 2455 kHz − 2001 kHz = 454 kHz<br>2455 kHz − 2003 kHz = 452 kHz |
| BFO | 455 kHz |
| Second mixer output and audio amp | 455 kHz − 454 kHz = 1 kHz<br>455 kHz − 452 kHz = 3 kHz |

As shown before, the carrier frequency was suppressed at the transmitter; thus, for proper intelligence detection, a carrier must be inserted by the receiver. The receiver illustrated in Figure 17 inserts a carrier frequency into the detector, although the carrier frequency may be inserted at any point in the receiver before demodulation.

When the SSB signal is received at the antenna, it is amplified by the RF amplifier and applied to the first mixer. By mixing the output of the local

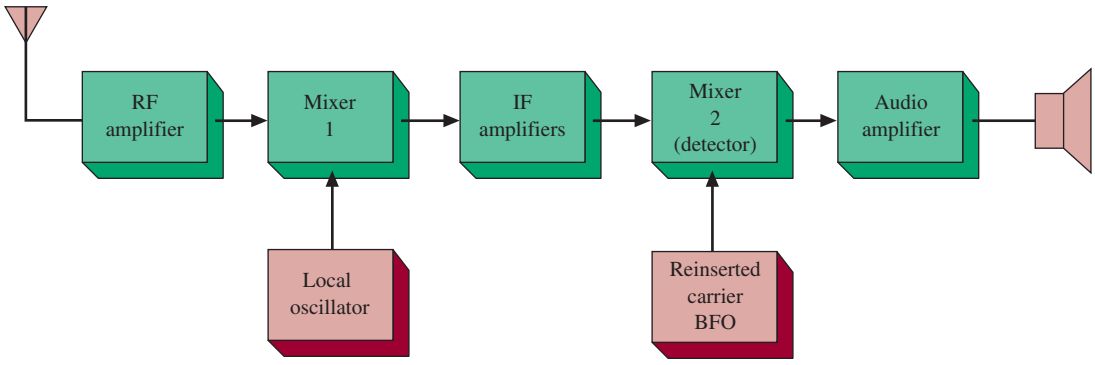


FIGURE 17 SSB receiver block diagram.

oscillator with the input signal (heterodyning), a difference frequency, or IF, is obtained. The IF is then amplified by one or more stages. Of course, this is dependent upon the type of receiver. Up to this point it is identical to an AM superheterodyne receiver. The IF output is applied to the second mixer (detector). The detector output is applied to the audio amplifier and then on to the output speaker.

Tuning the sideband receiver is somewhat more difficult than in a regular AM receiver. The carrier injection oscillator must be adjusted precisely to simulate the carrier frequency at all times. As previously explained, any tendency to drift within the oscillator will cause the output intelligence to be distorted.

## Basic SSB Receiver

**Butterworth Filter**
a constant-*k* type of *LC* filter

A basic SSB receiver is shown schematically in Figure 18. This superhet design functions well without an RF amplifier. The input signal comes in to a fixed Butterworth front-end filter ($FL_1$) that passes 3.75 to 4.0 MHz without tuning. A **Butterworth filter** exhibits a very flat response in the passband and approaches a 6-dB slope per octave. Individual channels in this amateur radio band are tuned by varying the local oscillator ($Q_3$) frequency. Notice that this stage is labeled with VFO, or *v*ariable *f*requency *o*scillator, and has a range from 4.253 to 4.453 MHz. This signal and the received signal are applied to the two gates of the mixer ($Q_1$). This 3N211 MOSFET provides high gain ($g_m \simeq 30{,}000\ \mu S$) and its output is applied to a mechanical filter, $FL_2$. The specified filter has a 2.2-kHz bandwidth at the 3-dB points and has a 5.5-kHz bandwidth at $-60$ dB.

The mechanical filter output is applied to the IF amplifier, $Q_2$, which is another 3N211 MOSFET. Its gain, and that of the audio amplifier $U_1$, are manually controlled by ganged potentiometers $R_{1A}$ and $R_{1B}$. The bias at gate 2 of $Q_2$ is varied by $R_{1A}$. To obtain a wide range of control, it is necessary to have gate 2 a volt or two less than gate 1. This is done by "bootstrapping" this stage with an LED, $D_1$, that conducts at about 1.5 V. Thus, when $R_{1A}$ has its arm at ground, gate 2 is effectively at $-1.5$ V and minimum gain for $Q_2$ occurs.

Another 3N211 device is used as the LO (or VFO if you prefer). Gates 1 and 2 of $Q_3$ are tied together. The oscillator signal is applied from the gate of $Q_3$ to gate 2 of the mixer, $Q_1$. A pure 3-V p-p sine wave is thereby available. $D_2$ is used as a switching diode to offset the VFO frequency when changing from usb to lsb.

The product detector stage ($Q_4$) is fed from the IF amp into the source of $Q_4$. The beat frequency oscillator ($Q_5$) is a switchable crystal oscillator. S1B selects either crystal $Y_1$ or $Y_2$ for lsb or usb, respectively. The product detector output (at $Q_4$'s drain) is applied to a 741 op amp audio amplifier that offers up to 40-dB gain. Its output is sufficient to drive headphones, or an IC power amp could be added if a speaker is needed.



## 7 Troubleshooting

There are two ways to generate SSB signals, but modern manufacturing methods have reduced the cost of filters to the point that nearly all generate the SSB signal with balanced modulators and filters. Most radios even use separate filters to select the upper or lower sideband as desired instead of switching oscillators.

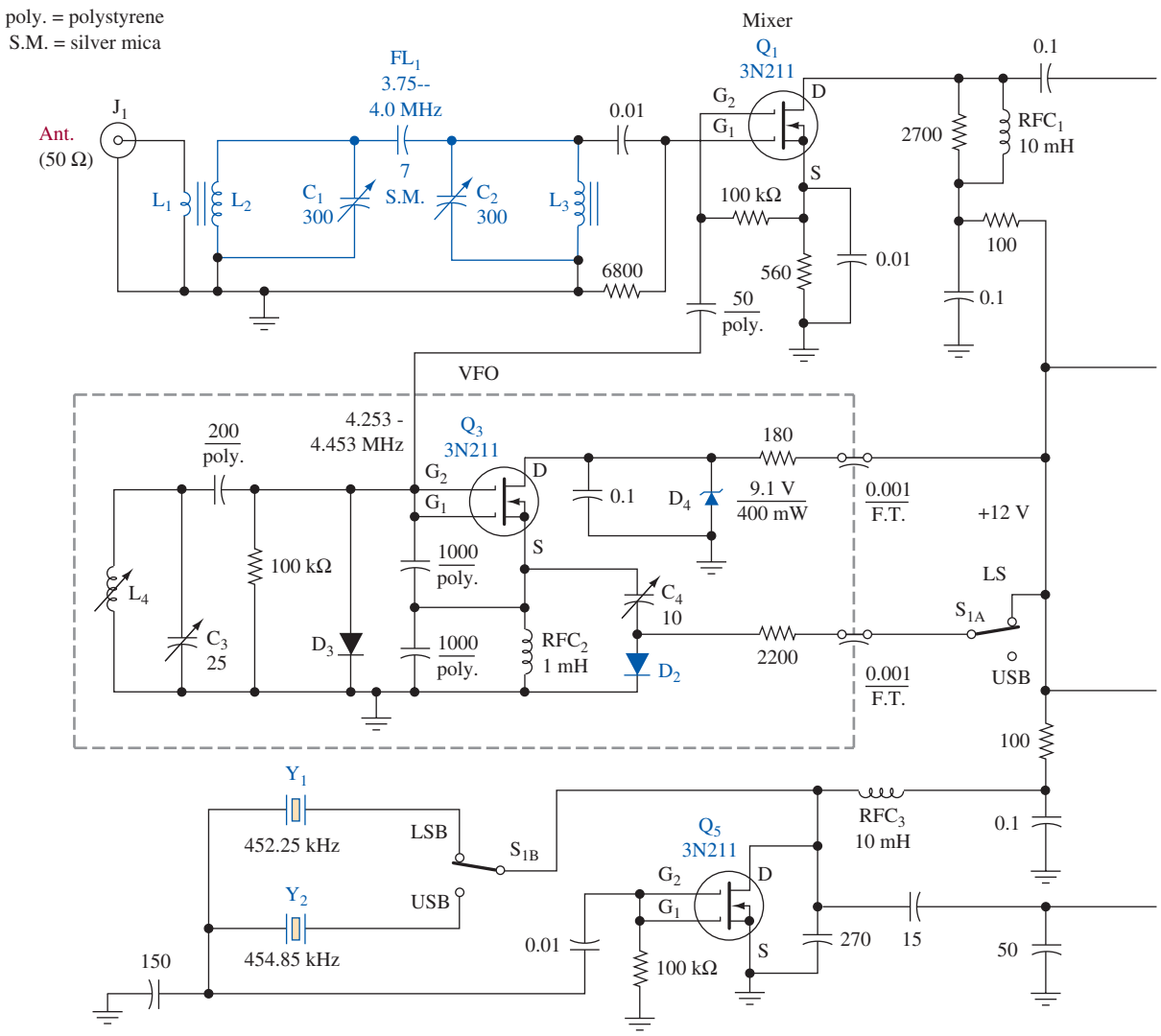


Fixed-value capacitors are disk ceramic unless noted otherwise. Polarized capacitors are electrolytic.
Fixed-value resistors are 1/4- or 1/2-Watt composition.

$C_1$, $C_2$—Mica compression trimmer, 300 pF max. Arco 427 or equiv.
$C_3$—Miniature 25-pF air variable. Hammarlund HF-25 or similar.
$C_4$—Circuit-board mount subminiature air variable or glass piston trimmer, 10 pF max. NPO miniature ceramic trimmer suitable as second choice.
$D_1$—LED, any color or size. Used only as 1.5-V reference diode.
$D_2$, $D_3$—Silicon switching diode, 1N914 or equiv.
$D_4$—Polarity-guarding diode. Silicon rectifier, 50 PIV, 1A.
$D_5$—Zener diode, 9.1 V, 400 mW or 1 Watt.
$FL_1$—Bandpass filter (see text).
$FL_2$—Collins Radio CB-type mechanical filter, Rockwell International No. 5269939010, 453.33-kHz center freq.
$J_1$—SO–239
$J_2$—Single-hole-mount phono jack.
$J_3$—Two-circuit phone jack.
$L_1$—Two turns No. 24 insulated wire over ground end of L2.

*(Continued)*

**FIGURE 18** SSB receiver. (From the *ARRL Handbook,* courtesy of the American Radio Relay League.)

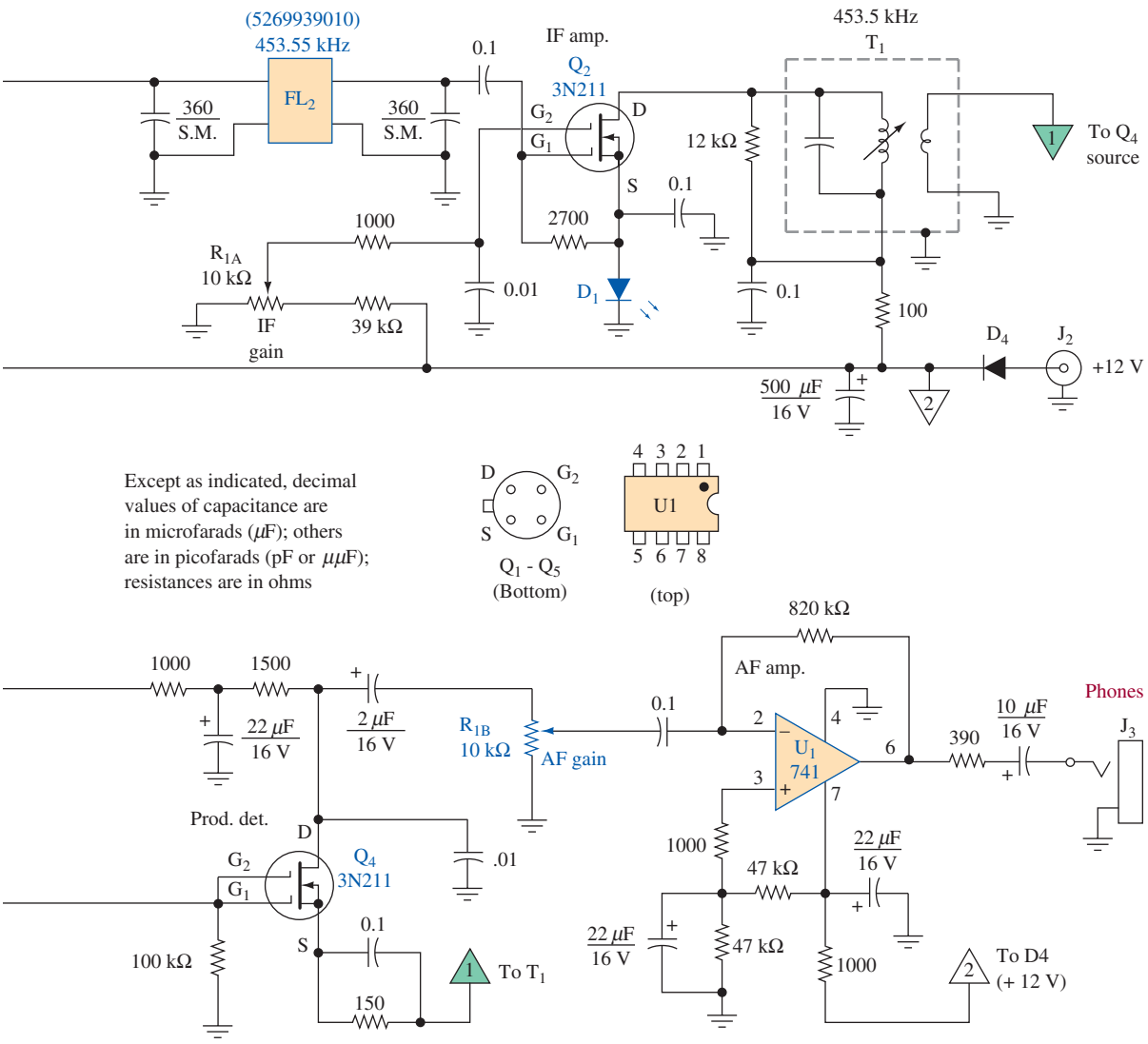


$L_2$, $L_3$—40 turns No. 24 enameled wire on T68-6 toroid core.

$L_4$—Slug-tuned inductor, 3.6- to 8.5-μH range, J. W. Miller 42A686CBI or equivalent suitable. Substitutes should have Q of 100 or greater at 4 MHz and be mechanically rigid.

$Q_1$–$Q_5$, incl. —Texas Instruments 3N211 FET,

$R_1$—Dual control, 10-kΩ per section, linear taper. Allen-Bradley type JD1N200P or similar. Separate controls can be used by providing extra hole in front panel.

$RFC_1$, $RFC_3$ — 10-mH miniature RF choke, J. W. Miller 70F 102AI or equiv.

$RFC_2$—1-mH miniature RF choke, J. W. Miller 70F 103AI or equiv.

$S_1$—Two-pole, two-position phenolic or ceramic wafer switch.

$T_1$—455-kHz miniature IF transformer (see text). J. W. Miller No. 2067.

$U_1$—8-pin dual-in-line 741 op amp.

$Y_1$, $Y_2$—International Crystal Co. type GP, 30-pF load capacitance, HC-6/U style of holder. LSB 452.25 kHz, and USB 454.85 kHz.

FIGURE 18 *(Continued)*

In troubleshooting SSB generators, you will be mainly looking for the presence or absence of various oscillations. A spectrum analyzer is an extremely desirable tool in this regard, but if one is not available, a good general coverage shortwave receiver is the next best tool. It is also desirable to have a frequency counter to measure the exact frequency of the oscillators.

What do we do when faced with a radio receiver that has no reception? Where do we start to look for the trouble? When faced with this kind of problem, how does the technician proceed in formulating a plan of action? This section will show you a popular method used for finding the problem in a receiver with no reception.

After completing this section you should be able to

- Troubleshoot SSB generators and demodulators
- Test for carrier leakthrough with an oscilloscope or spectrum analyzer
- Identify a defective stage in an SSB receiver
- Describe the signal injection method of troubleshooting

## Balanced Modulators

What to look for and do:

1. With no audio input, there should be no RF output. An oscilloscope will be helpful here.
2. The voltage from the oscillator must be 6 to 8 times the peak audio voltage. There should be several volts of RF and a few tenths of a volt of audio.
3. The diodes should be well matched. An ohmmeter can be used to select matched pairs or quads.
4. You should be able to null the carrier at the output by adjusting R1 and C1. It may be necessary to adjust each control several times alternately to secure optimum carrier suppression. Further detail on testing for carrier leakthrough is provided in the next few paragraphs.

## Testing for Carrier Leakthrough

The purpose of the balanced modulator is to suppress or cancel the carrier. An exactly balanced modulator would totally suppress or remove the carrier. This is an impossibility because there are always imbalances—one diode conducts a little more current than another perhaps. To achieve a circuit's maximum suppression, balanced modulators usually include one or more balance controls, as shown in Figure 19.

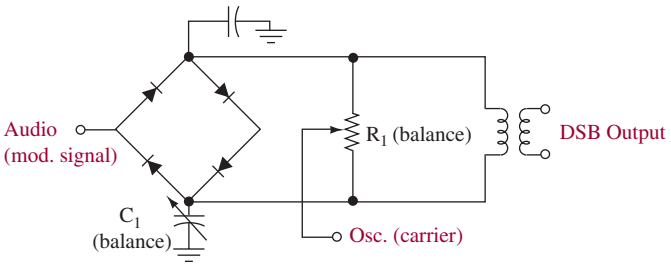


FIGURE 19 Balanced modulator.

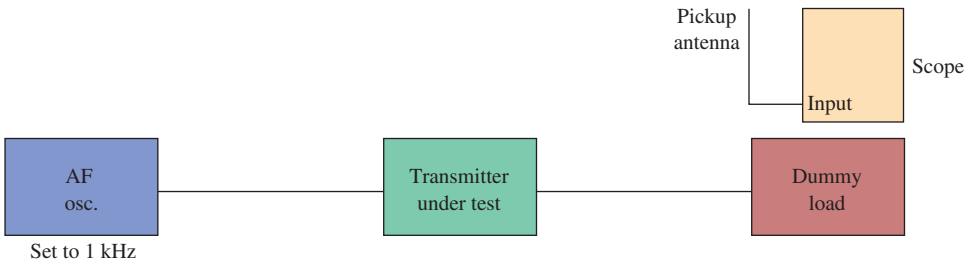


FIGURE 20 Checking for carrier leakthrough with an oscilloscope.

**Carrier Leakthrough**
the amount of carrier not suppressed by the balanced modulator

The first thing to do when troubleshooting a balanced modulator is to check the condition of its balance. This can be done by looking for carrier leakthrough with an oscilloscope. The circuit for this test is shown in Figure 20. **Carrier leakthrough** simply means the amount of carrier not suppressed by the balanced modulator.

The audio signal generator is set to some frequency within the normal audio range of the transmitter, perhaps 1 or 1.5 kHz. Check the manual for the correct RF and audio signal levels into the modulator. (Test points may be included for measuring these.) Typically, the RF input (oscillator output) will be about 4 to 6 times the audio level for proper diode switching. Any DMM can be used to measure the audio, but the meter will require an RF probe for the oscillator output.

Figure 21(a) shows the transmitter signal when there is carrier leakthrough; that is, the carrier is not fully suppressed. Note the similarity to a partially modulated AM signal. Figure 21(b) shows the signal as it should be, a single tone signal; the carrier is fully suppressed.

One of two conditions could cause carrier leakthrough: either the circuit has become unbalanced or there are defective components. To check for imbalance, adjust the balance control(s) for minimum carrier amplitude. Should there be more than one control, it may be necessary to go back and forth more than once between controls because the setting of one often affects the setting of another.

If there is no balance problem and the input signal levels are correct, there is a defective component, most likely one of the diodes in the bridge assembly. Such bridges are usually a sealed unit; you cannot get at individual diodes. If this is the case, replace the suspect unit with a known good one and recheck for proper operation. Be sure to check balance again with the new unit in place.

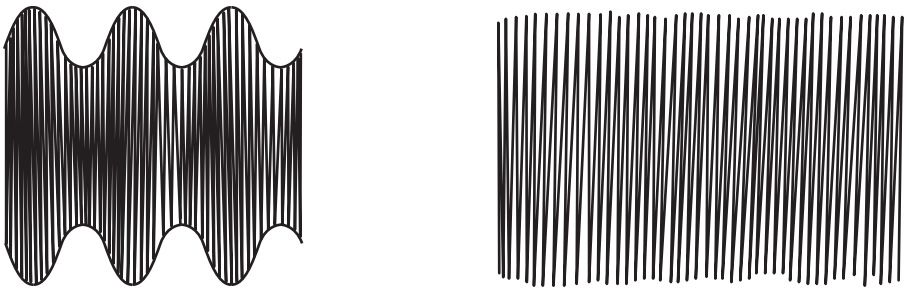

(a) Carrier leakthrough (b) No leakthrough

FIGURE 21 Single-sideband signal with and without carrier leakthrough.

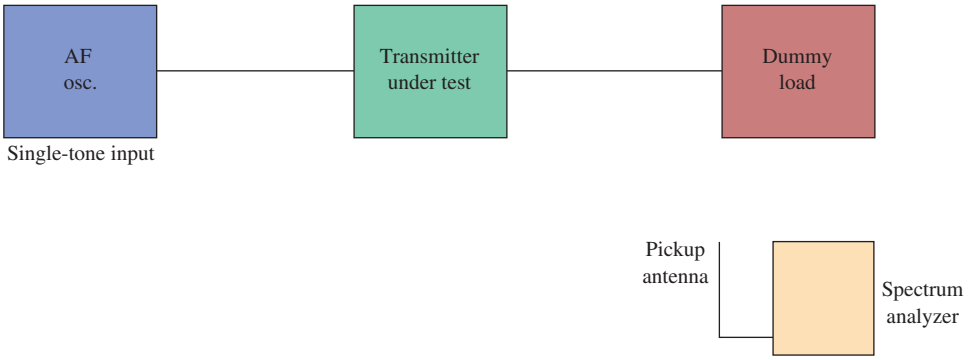


FIGURE 22 Checking carrier suppression with a spectrum analyzer.

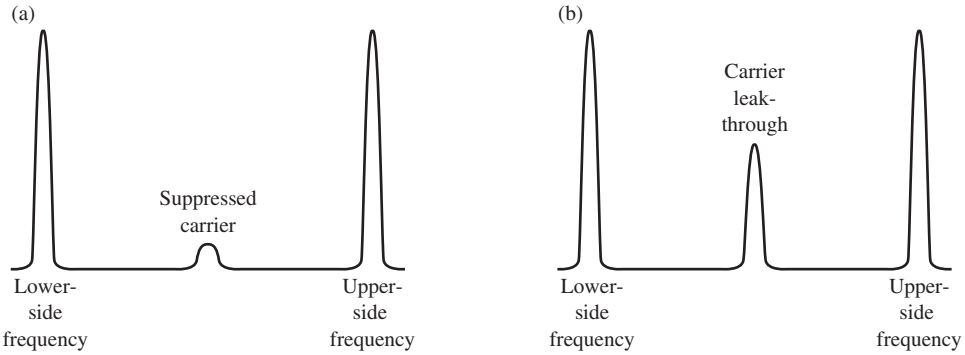


FIGURE 23 Carrier suppression as seen on a spectrum analyzer.

Figure 22 shows the circuit for checking carrier leakthrough and suppression with a spectrum analyzer.

Having determined that the RF and audio frequencies and levels are correct, observe the screen of the spectrum analyzer. If the modulator is operating correctly, you will see the display in part (a) of Figure 23. Note the location of the suppressed carrier. Part (b) shows the same signal with some carrier leakthrough. As before, adjust the balance controls for minimum carrier amplitude (maximum suppression).

An advantage of the spectrum analyzer is that carrier suppression can be measured in dB directly on the analyzer's log scale. Check the transmitter's manual for the suppression figure; it will be in the neighborhood of −60 to −70 dB. The instruction manual for the spectrum analyzer will tell you how to set the unit's controls for logarithmic measurements.

## Testing Filters

Filters designed for SSB service can be ceramic, crystal, or mechanical, but test methods are the same. The filter can have 6 to 10 dB of loss in the passband. Figure 24 shows how you would set up the equipment to test a filter.

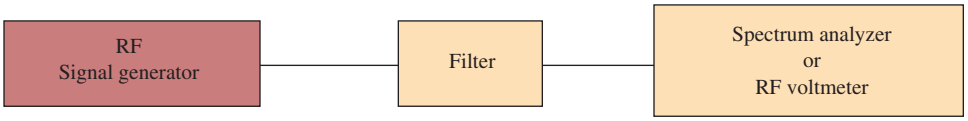


FIGURE 24 Filter testing.

The technician should slowly sweep the generator frequency across the passband of the filter. If the sweep speed is too fast, the filter's time delay will cause misleading results. Response of the filter should fall off rapidly at the band edges. Two or three dB of ripple in the passband is normal. If the ripple is as much as 6 to 10 dB, the signal passing through the filter will be badly distorted.

## Testing Linear Amplifiers

The two-tone test is generally used to check amplifier linearity. For example, a 400-Hz tone and a 2500-Hz tone are applied to the input of an SSB transmitter. The output is observed with a spectrum analyzer tuned to the transmitter's carrier frequency. Nonlinearity in the amplifier will cause the amplifier to generate mixer-like products. The proper response is shown in Figure 25. The carrier will not be present if the balanced modulator is properly adjusted. In a good linear amplifier, the distortion products will be at least 30 dB below the two desired tones. If the amplifier is not linear, several spurious outputs will appear and may be only a few dB below the desired signals. Amplifier nonlinearity is usually caused by improper bias points in the amplifier.




A group of spectrum analyzers from Agilent Technologies. (© Agilent Technologies, Inc. 2007 Reproduced with Permission, Courtesy of Agilent Technologies, Inc.)

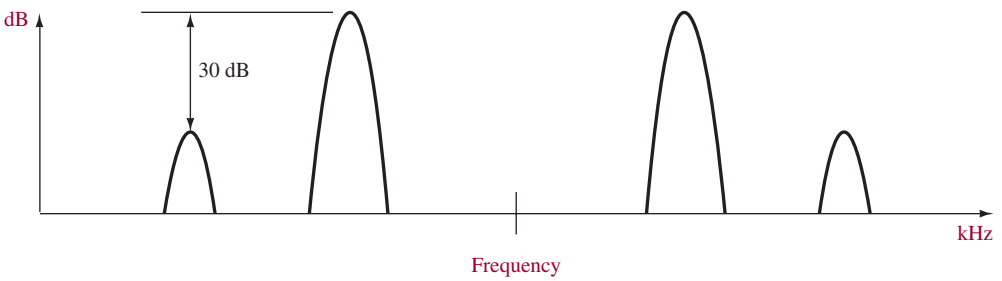


FIGURE 25 Two-tone test.

A qualitative check on linearity can be made with the two-tone test by observing the RF output on an oscilloscope. The output should appear as in Figure 14. The output will approach a perfect sine wave if the amplifier is linear. Nonlinearity shows up as flat-topping of the sine wave.

## Testing the SSB Receiver System

It's always best to start by having proper servicing material available for the set being repaired. This material includes the service manual, block diagrams, and schematic diagrams. The bare minimum would be the schematic diagrams. These items enhance the troubleshooting job tremendously. With today's complex electronic circuits, it is very difficult to attempt a service job without the service literature.

From the antenna of the receiver illustrated in Figure 26, radio frequency signals are amplified by the RF amplifier. The radio signal can be traced from the antenna to where it is finally heard at the speaker. The RF amplifier boosts the signal before it goes to mixer one. A nonworking local oscillator can kill the received signal. So the local oscillator is included in the signal chain as a possible cause of no reception. Next, the converted RF signal is amplified in the IF amplifiers. From the IF strip, the signal is applied to mixer 2, the detector. Mixer 2 is responsible for recovering the original intelligence signal. To recover this original intelligence, the BFO reinserts the missing carrier. If the carrier were not

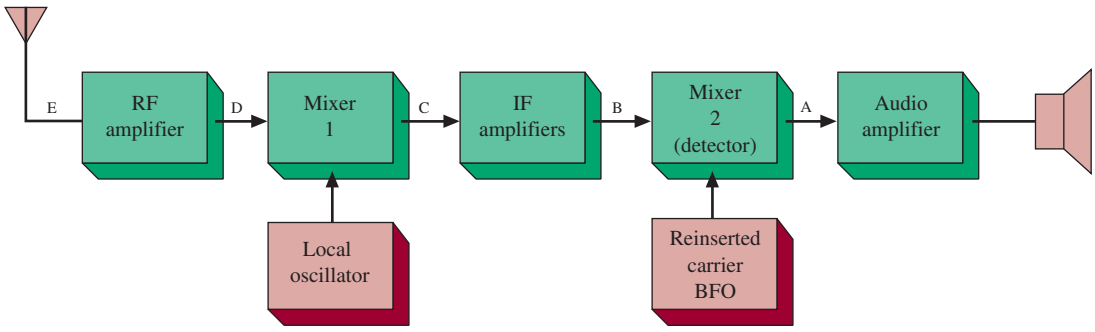


FIGURE 26 SSB receiver block diagram.

reinserted, the radio would still produce sound at the speaker. The sound is garbled without this reinserted carrier, but the reception is not otherwise hindered. However, a problem in mixer 2 would interfere with the signal reception. The last stage before the speaker is the audio amplifier. In summary, the stages that can interfere with reception are the antenna, the RF amplifier, mixer 1, the local oscillator, the IF amplifiers, mixer 2, the audio amplifier section, the speaker, and the power supply.

The speaker and power supply should be checked first in the sequence of troubleshooting events. Check the power supply voltages using the DMM and compare these measurements to the specified values given in the service literature. If the voltage measurements are correct, the power supply is good. The speaker can be checked by inserting a tone across its terminals. If you hear the tone, then the speaker is working.

## Signal Injection

Use a signal generator that is adjusted to a 1-V signal set to the center IF frequency. Modulate this IF with a 1-kHz signal. Inject the IF signal at point B as shown on the block diagram in Figure 26. The 1-kHz test tone should be heard at the speaker output if mixer 2 and the audio amplifier are operating correctly. This would mean that the trouble lies toward the antenna. If you do not hear the tone, inject a pure 1-kHz signal at point A, just ahead of the audio amplifier. A tone from the speaker would now indicate a problem in mixer 2.

If the tone were heard when the signal was injected at point B, we would then move the probe to point C. A tone heard from the speaker indicates the IF amplifier is functioning correctly. Before moving to point D and applying the test signal, readjust the signal generator for a received RF frequency with the modulated 1-kHz signal. Set the generator's output voltage to 20 mV (check the service literature for exact signal levels). If the test tone is heard from the speaker at this point, then the RF amplifier or the antenna can be considered faulty. Decrease the output amplitude of the signal generator to around 2 mV and inject the test signal at point E. If the RF amplifier is bad, no tone will reach the speaker.

Table 1 will guide you through the signal-injecting procedure (test points are shown in Figure 26).

**Table 1**

| Signal Injected | Test Point | Tone Present | Analysis |
|---|---|---|---|
| 1. 1-kHz modulated IF | B | Y (yes)<br>N (no) | Mixer 2 and audio amplifier good; go to step 3<br>Go to step 2 |
| 2. 1-kHz signal | A | Y<br>N | Mixer 2 stage bad, audio amplifier good<br>Audio amplifier bad |
| 3. Modulated IF | C | Y<br>N | IF amplifier okay; go to step 4<br>IF amplifier bad |
| 4. Modulated RF | D | Y<br>N | Mixer 1 and local oscillator good; go to step 5<br>Problem resides in mixer 1 or the LO |
| 5. Modulated RF | E | Y<br>N | Trouble lies beyond the RF amplifier; check antenna, cabling, connectors, or coupling<br>RF amplifier bad |

Using Table 1, you can isolate a defective stage rather quickly. A variation on the above technique is to use an oscilloscope to look at the test signal at the output of each stage instead of relying on hearing the signal.

## 8 Troubleshooting with Electronics Workbench™ Multisim

This section extends understanding of single-sideband systems as implemented in Electronics Workbench™ Multisim. Open **Fig4-27** at www.pearsoned.com/electronics. This circuit contains two sine-wave generators that are input into a multiplier module. A multiplier circuit produces the sum and difference of the input frequencies on its output. For this example, the sum is 3 MHz + 1 MHz = 4 MHz, and the difference is 3 MHz − 1 MHz = 2 MHz. Start the simulation and observe the inputs to the multiplier and the complex output waveform using the oscilloscope. The circuit is shown in Figure 27.

Next, open the spectrum analyzer, which is connected to the output of the multiplier. The spectrum analyzer shows that frequencies of 2 MHz and 4 MHz are produced. This is shown in Figure 28. This is called a double-sideband spectrum. Use the cursor to determine the frequencies of each spectral component.

It is necessary to remove one of the sidebands in an SSB (single-sideband) system. This can be accomplished by passing the output of the multiplier through a filter. In this example, a five-element Chebyshev high-pass filter has been provided to remove the lower-sideband component. This filter has a 20-dB upper cutoff

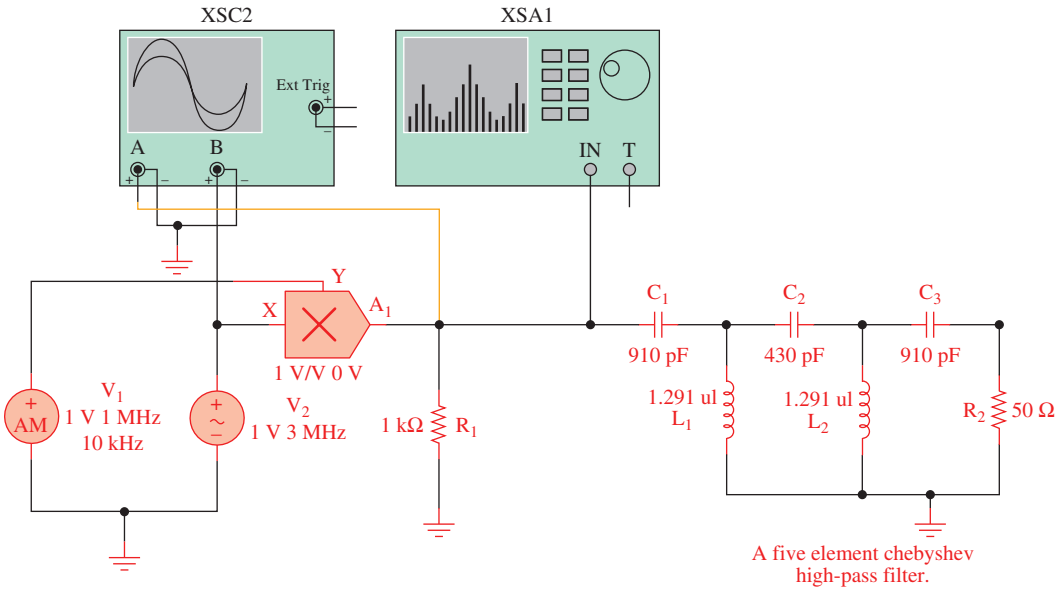


FIGURE 27 A multiplier plus SSB filter as implemented with Electronics Workbench™ Multisim.

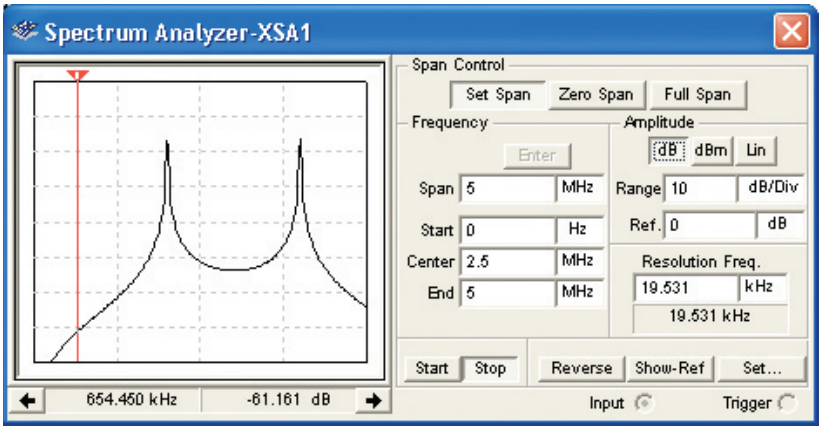


FIGURE 28 The double-sideband output spectrum for the multiplier circuit.

frequency of about 2.6 MHz. Therefore, frequencies below 2.6 MHz should be significantly attenuated. Connect the spectrum analyzer to the output of the filter and restart the simulation. Verify that the output contains only the upper-sideband component. The sideband at 2 MHz has been significantly reduced, but the upper sideband is still present. The result is shown in Figure 29.

The next part of this exercise provides you with the opportunity to troubleshoot a filter circuit. Open **FigE4-1** at www.pearsoned.com/electronics. Start the simulation and use the spectrum analyzer to observe the output spectrum. Note that the spectrum analyzer is connected to the output of the filter. Is the circuit working as expected? If not, use the spectrum analyzer and the oscilloscope to check the waveform. Don't forget to perform a visual check of the circuit for potential problems. You will discover that both the upper and lower sidebands are present on the output. What circuit removes the lower sideband? Shouldn't the filter remove the lower sideband? Careful inspection of the filter shows that the ground is missing. Replace the ground and rerun the simulation. The circuit should be functioning properly.

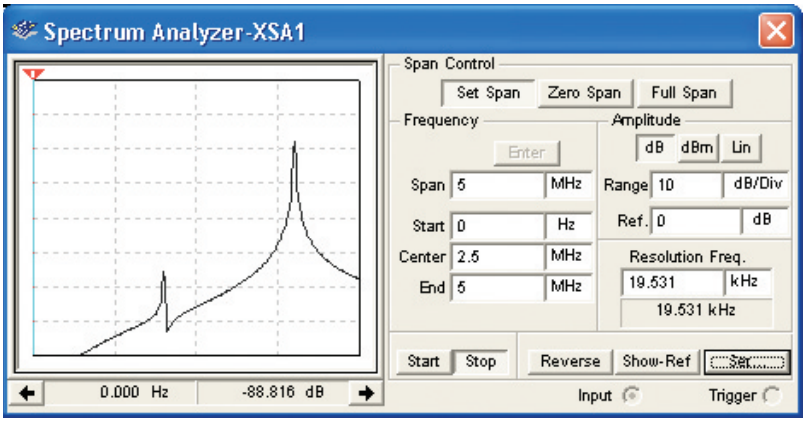


FIGURE 29 The multiplier circuit with the lower sideband removed.

## Electronics Workbench™ Exercises

1. Open **FigE4-2** at www.pearsoned.com/electronics. This circuit contains a tunable high-pass filter. Use the **(a/A)** and **(b/B) keys** to adjust the inductance values to optimize the performance of the filter. Record your settings and comment on the effect that changing the inductance values has on the output. ($L_1 = 35\%, L_2 = 55\%$)
2. Open **FigE4-3** at www.pearsoned.com/electronics. This circuit contains a fault. In this exercise, assume that you have been told that the circuit does not appear to be working properly. You may need to refer back to the waveforms in **Fig4-27** for a properly functioning circuit to help guide you with your troubleshooting. Confirm that the circuit is not working properly and find the cause of the problem. Once you find the problem, record the fault and the circuit behavior generated by the fault. Correct the fault and rerun the simulation to verify that the problem has been corrected.
3. Open **FigE4-4** at www.pearsoned.com/electronics. This circuit contains a fault. Use your troubleshooting techniques to find the problem. Once you find the problem, record the fault and the circuit behavior observed. Correct the fault and rerun the simulation to verify that the problem has been corrected.



## Summary

In this chapter we introduced single-sideband (SSB) systems and explained their various advantages over standard AM systems. The major topics you should now understand include the following:

- the advantages of SSB systems, including the utilization of available frequency bandwidth, noise reduction, power requirements, and selective fading effects
- the various SSB systems and their general characteristics
- an analysis of the function of a balanced modulator
- the operation of a balanced ring modulator
- the application of linear integrated circuit balanced modulators
- the need for high-*Q* bandpass filters and the description of mechanical, ceramic, and crystal varieties
- the analysis of SSB transmission systems, including the filter and phase methods
- an understanding of the need for amplitude compandoring and a method of implementation
- the description and operation of a class AB push-pull linear power amplifier
- the analysis of SSB demodulation techniques
- the analysis of a complete SSB receiver



## Questions and Problems

### Section 1

1. An AM transmission of 1000 W is fully modulated. Calculate the power transmitted if it is transmitted as an SSB signal. (167 W)
2. An SSB transmission drives 121 V peak into a 50-Ω antenna. Calculate the PEP. (146 W)



3. Explain the difference between rms and PEP designations.
4. Provide detail on the differences between ACSSB, SSB, SSBSC, and ISB transmissions.
5. List and explain the advantages of SSB over conventional AM transmissions. Are there any disadvantages?
6. A sideband technique called doubled sideband/suppressed carrier (DSBSC) is similar to a regular AM transmission, double sideband full carrier (DSBFC). Using your knowledge of SSBSC, explain the advantage DSBSC has over regular AM.

## Section 2

7. What are the typical inputs and outputs for a balanced modulator?
8. Briefly describe the operation of a balanced ring modulator.
9. Explain the advantages of using an IC for the four diodes in a balanced ring modulator as compared with four discrete diodes.
10. Referring to the specifications for the AD630 LIC balanced modulator in Figure 2, determine the channel separation at 10 kHz, explain how a gain of +1 and +2 are provided.
11. Explain how to generate an SSBSC signal from the balanced modulator.

## Section 3

12. Calculate a filter's required $Q$ to convert DSB to SSB, given that the two sidebands are separated by 200 Hz. The suppressed carrier (40 dB) is 2.9 MHz. Explain how this required $Q$ could be greatly reduced. (36,250)

*13. Draw the approximate equivalent circuit of a quartz crystal.

14. What are the undesired effects of the crystal holder capacitance in a crystal filter, and how are they overcome?

*15. What crystalline substance is widely used in crystal oscillators (and filters)?

16. Using your library or some other source, provide a schematic for a four-element crystal lattice filter and explain its operation.

*17. What are the principal advantages of crystal control over tuned circuit oscillators (or filters)?

18. Explain the operation of a ceramic filter. What is the significance of a filter's shape factor?
19. Define *shape factor*. Explain its use.
20. A bandpass filter has a 3-dB ripple amplitude. Explain this specification.
21. Explain the operation and use of mechanical filters.
22. Why are SAW filters not often used in SSB equipment?
23. An SSB signal is generated around a 200-kHz carrier. Before filtering, the upper and lower sidebands are separated by 200 Hz. Calculate the filter $Q$ required to obtain 40-dB suppression. (2500)

*An asterisk preceding a number indicates a question that has been provided by the FCC as a study aid for licensing examinations.

## Section 4

24. Determine the carrier frequency for the transmitter shown in Figure 8. (It is *not* 3 MHz).
25. Draw a detailed block diagram of the SSB generator shown in Figure 9. Label frequencies involved at each stage if the intelligence is a 2-kHz tone and the usb is utilized.
26. The sideband filter ($FL_1$) in Figure 9 has a 5-dB *insertion loss* (i.e., a 5-dB signal loss from input to output). Calculate the filter's output voltage assuming equal impedances at its input and output. (0.45 V p-p)
27. Calculate the total impedance in the collector of $Q_3$ in Figure 9. (54.3 Ω)
28. List the advantages of the phase versus filter method of SSB generation. Why isn't the phase method more popular than the filter method?
29. Explain the operation of the phase-shift SSB generator illustrated in Figure 10. Why is the carrier phase shift of 90° not a problem, whereas that for the audio signal is?
30. Explain the operation and need for the control circuitry ($K_1$, $Q_1$, $Q_2$) in the linear power amplifier shown in Figure 13.
31. The PEP transmitted by an ACSSB system is 140 W. It uses an NE571N compandor LIC. Calculate the power transmitted under the no-modulation condition. The audio signal ranges from −28 dBm to +34 dBm before compression. Determine the compressor's output range. (14 W, −14 dBm to +17 dBm)
32. Explain how an ACSSB system can provide improved noise performance compared to a regular SSB system.

## Section 5

33. List the components of an AM signal at 1 MHz when modulated by a 1-kHz sine wave. What is the component(s) if it is converted to a usb transmission? If the carrier is redundant, why must it be "reinserted" at the receiver?
34. Explain why the BFO in an SSB demodulator has such stringent accuracy requirements.
35. Suppose the modulated signal of an SSBSC transmitter is 5 kHz and the carrier is 400 kHz. At what frequency must the BFO be set?
36. What is a product detector? Explain the need for a low-pass filter at the output of a balanced modulator used as a product detector.
37. Calculate the frequency of a product detector that is fed an SSB signal modulated by 400 Hz and 2 kHz sine waves. The BFO is 1 MHz.

## Section 6

38. Draw a block diagram for the receiver shown schematically in Figure 18. Suggest a change to the schematic that you feel would improve its performance and explain why.

## Section 7

39. Describe the output of the modulator in Figure 1 if the $L_1$ winding was open circuited.
40. When troubleshooting the balanced modulator in Figure 19, provide a detailed procedure to check diode matching by using an ohmmeter. Describe the problem caused with this circuit if the diodes are not matched.



41. Explain the concept of carrier leakthrough and its causes, and provide two methods of testing for it.
42. The two-tone test is used to check amplifier linearity. Explain why a single-tone test will not be as effective as a two-tone test.
43. Explain the effect of injecting a modulated IF signal at point D in Figure 26.
44. Suppose it was determined that there was an output from test point B in Figure 26 and no output from test point A. Explain the possible causes of no output.
45. Describe how signal tracing and signal injection can be used to troubleshoot the SSB receiver in Figure 26.
46. With reference to Table 1, explain why doing test 5 before tests 1 through 4 invalidates the analysis.

## Questions for Critical Thinking

47. If a carrier and one sideband were eliminated from an AM signal, would the transmission still be usable? Why or why not?
48. Explain the principles involved in a single-sideband, suppressed-carrier (SSBSC) emission. How does its bandwidth of emission and required power compare with that of full carrier and sidebands?
49. You have been asked to provide SSB using a DSB signal, cos $\omega_i t$, cos $\omega_c t$. Can this be done? Provide mathematical proof of your judgment.
50. If, in an emergency, you had to use an AM receiver to receive an SSB broadcast, what modifications to the receiver would you need to make?

# FREQUENCY MODULATION
# TRANSMISSION

From *Modern Electronic Communication*, Ninth Edition, Jeffrey S. Beasley, Gary M. Miller. Copyright © 2008 by Pearson Education, Inc. Published by Prentice Hall. All rights reserved.

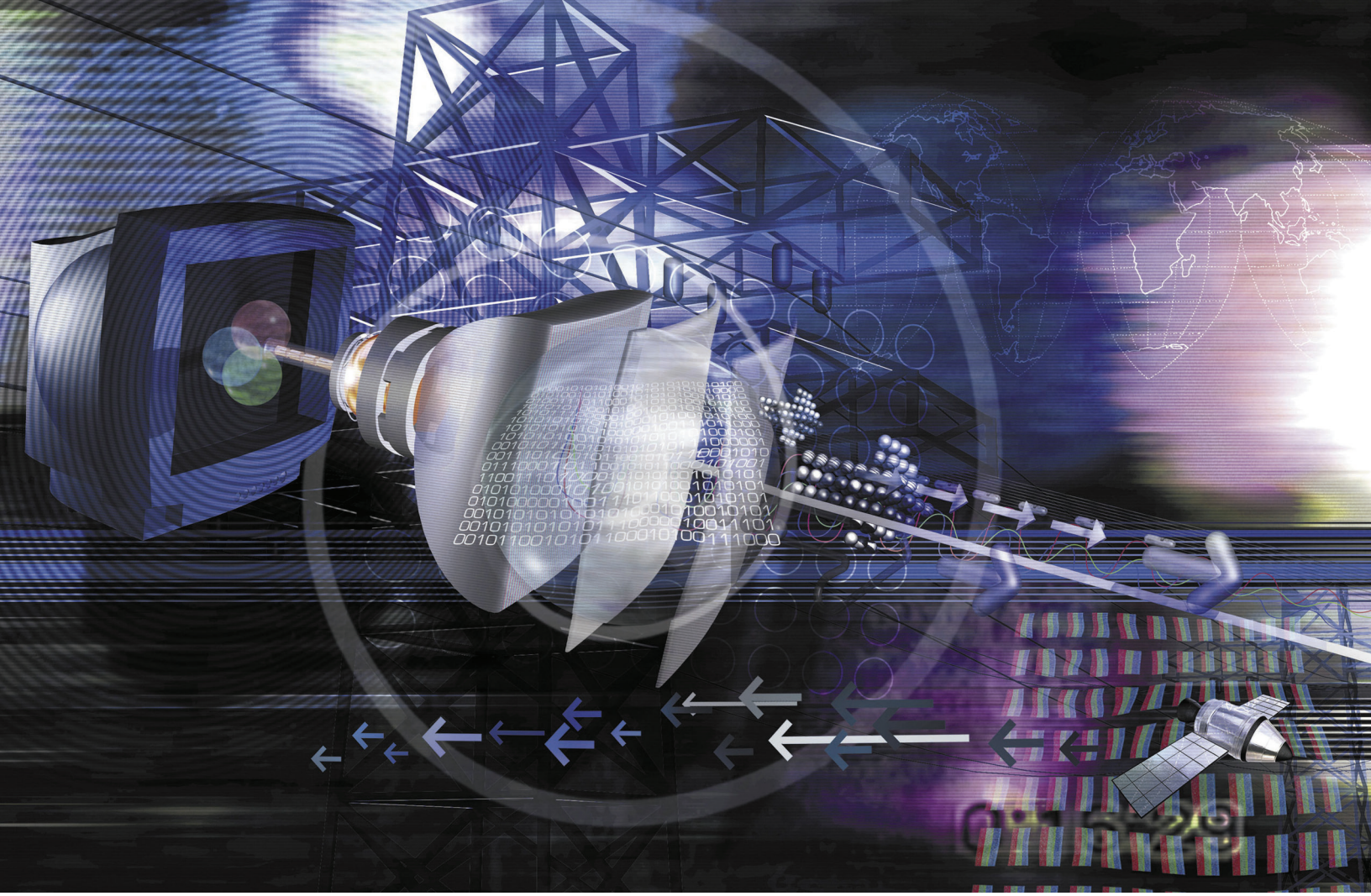

## Chapter Outline

1 Angle Modulation
2 A Simple FM Generator
3 FM Analysis
4 Noise Suppression
5 Direct FM Generation
6 Indirect FM Generation
7 Phase-Locked-Loop FM Transmitter
8 Stereo FM
9 FM Transmissions
10 Troubleshooting
11 Troubleshooting with Electronics Workbench™ Multisim

## Objectives

- Define *angle modulation* and describe the two categories
- Explain a basic capacitor microphone FM generator and the effects of voice amplitude and frequency
- Analyze an FM signal with respect to modulation index, sidebands, and power
- Describe the noise suppression capabilities of FM and how they relate to the capture effect and preemphasis
- Provide various schemes and circuits used to generate FM
- Explain how a PLL can be used to generate FM
- Describe the multiplexing technique used to add stereo to the standard FM broadcast systems

# FREQUENCY MODULATION TRANSMISSION



The Harris HT30/35CD FM transmitter. (Courtesy of Harris Corporation.)

## Key Terms

angle modulation
phase modulation
frequency modulation
deviation constant (*k*)
frequency deviation
modulation index
Bessel functions
Carson's rule
guard bands
deviation ratio (DR)
wideband FM
narrowband FM
limiter
capture effect
capture ratio
threshold
preemphasis
deemphasis
Dolby system
varactor diode
reactance modulator
voltage-controlled oscillator
automatic frequency control
Crosby systems
frequency multipliers
exciter
discriminator
Armstrong modulator
pump chain
frequency multiplexing
multiplex operation
frequency-division multiplexing
matrix network



# 1 Angle Modulation

There are three parameters of a sine-wave carrier that can be varied to allow it to carry a low-frequency intelligence signal. They are its amplitude, frequency, and phase. The latter two, frequency and phase, are actually interrelated, as one cannot be changed without changing the other. They both fall under the general category of *angle modulation.* **Angle modulation** is defined as modulation where the angle of a sine-wave carrier is varied from its reference value. Angle modulation has two subcategories, phase modulation and frequency modulation, with the following definitions:

**Angle Modulation** superimposing the intelligence signal on a high-frequency carrier so that its phase angle or frequency is altered as a function of the intelligence amplitude

**Phase Modulation** superimposing the intelligence signal on a high-frequency carrier so that the carrier's phase angle departs from its reference value by an amount proportional to the intelligence amplitude

**Frequency Modulation** superimposing the intelligence signal on a high-frequency carrier so that the carrier's frequency departs from its reference value by an amount proportional to the intelligence amplitude

***Phase modulation (PM):*** angle modulation where the phase angle of a carrier is caused to depart from its reference value by an amount proportional to the modulating signal amplitude.

***Frequency modulation (FM):*** angle modulation where the instantaneous frequency of a carrier is caused to vary by an amount proportional to the modulating signal amplitude.

The key difference between these two similar forms of modulation is that in PM the amount of phase change is proportional to intelligence amplitude, while in FM it is the frequency change that is proportional to intelligence amplitude. As it turns out, PM is *not* directly used as the transmitted signal in communications systems but does have importance because it is often used to help generate FM, *and* a knowledge of PM helps us to understand the superior noise characteristics of FM as compared to AM systems. In recent years, it has become fairly common practice to denote angle modulation simply as FM instead of specifically referring to FM and PM.

The concept of FM was first practically postulated as an alternative to AM in 1931. At that point, commercial AM broadcasting had been in existence for over 10 years, and the superheterodyne receivers were just beginning to supplant the TRF designs. The goal of research into an alternative to AM at that time was to develop a system less susceptible to external noise pickup. Major E. H. Armstrong developed the first working FM system in 1936, and in July 1939, he began the first regularly scheduled FM broadcast in Alpine, New Jersey.

## Radio Emission Classifications

Table 1 gives the codes used to indicate the various types of radio signals. The first letter is A, F, or P to indicate AM, FM, or PM. The next code symbol is one of the numbers 0 through 9 used to indicate the type of transmission. The last code symbol is a subscript. If there is no subscript, it means double-sideband, full carrier. Here are some examples of emission codes:

| | |
|---|---|
| $A3_a$ | SSB, reduced carrier |
| $A3_i$ | SSB, no carrier |
| F3 | FM, double-sideband, full carrier |
| $A7_i$ | SSB, no carrier, multiple sidebands with different messages |
| 10A3 | AM, double-sideband, full carrier, 10-kHz bandwidth |

Notice the last example. If an emission code is preceded by a number, that number is the bandwidth of the signal in kHz.

**Table 1** Radio Emission Classifications

| Modulation | Type | Subscripts |
|---|---|---|
| A Amplitude | 0 Carrier on only | None Double-sideband, full carrier |
| F Frequency | 1 Carrier on–off (Morse code, radar) | a Single-sideband, reduced carrier |
| P Phase | 2 Carrier on, keyed tone—on–off | b Two independent sidebands |
| | 3 Telephony, voice, or music | c Vestigial sideband |
| | 4 Facsimile, nonmoving or slow-scan TV | d Pulse amplitude modulation (PAM) |
| | 5 Vestigial sideband, commercial TV | e Pulse width modulation (PWM) |
| | 6 Four-frequency diplex telegraphy | f Pulse position modulation (PPM) |
| | 7 Multiple sidebands, each with different message | g Digital video |
| | 8 Unassigned | h Single-sideband, full carrier |
| | 9 General, all other | i Single-sideband, no carrier |



## 2 A Simple FM Generator

To gain an intuitive understanding of FM, consider the system illustrated in Figure 1. This is actually a very simple, yet highly instructive, FM transmitting system. It consists of an *LC* tank circuit, which, in conjunction with an oscillator circuit, generates a sine-wave output. The capacitance section of the *LC* tank is not a standard capacitor but is a capacitor microphone. This popular type of microphone is often referred to as a condenser mike and is, in fact, a variable capacitor. When no sound waves reach its plates, it presents a constant value of capacitance at its two output terminals. When sound waves reach the mike, however, they alternately cause its plates to move in and out. This causes its capacitance to go up and down around its center value. The *rate* of this capacitance change is equal to the frequency of the sound waves striking the mike, *and* the *amount* of capacitance change is proportional to the amplitude of the sound waves.

Because this capacitance value has a direct effect on the oscillator's frequency, the following two *important* conclusions can be made concerning the system's output frequency:

1. The frequency of impinging sound waves determines the *rate* of frequency change.
2. The amplitude of impinging sound waves determines the *amount* of frequency change.

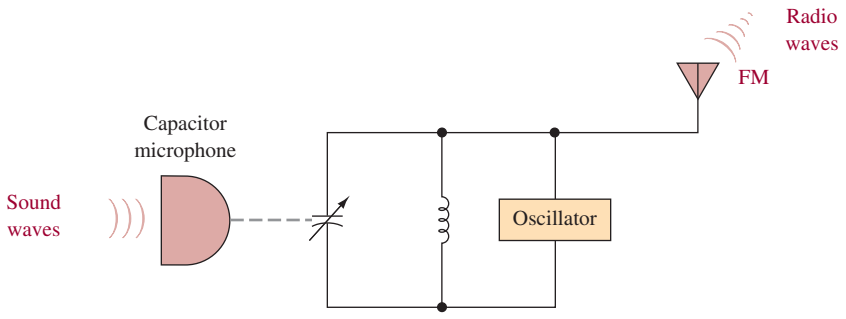


FIGURE 1 Capacitor microphone FM generator.

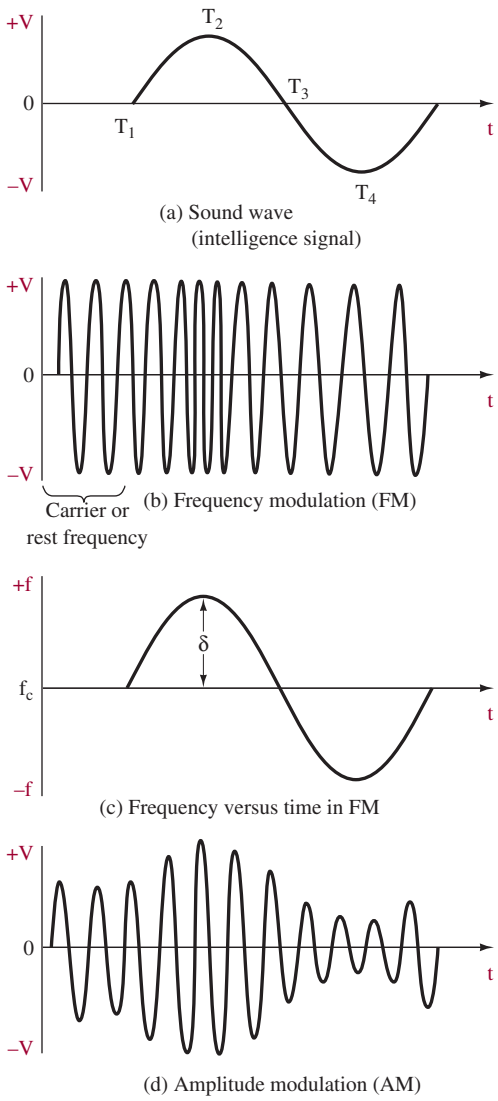


**FIGURE 2** FM representation.

Consider the case of the sinusoidal sound wave (the intelligence signal) shown in Figure 2(a). Up until time $T_1$ the oscillator's waveform in Figure 2(b) is a constant frequency with constant amplitude. This corresponds to the carrier frequency ($f_c$) or *rest* frequency in FM systems. At $T_1$ the sound wave in Figure 2(a) starts increasing sinusoidally and reaches a maximum positive value at $T_2$. During this period, the oscillator frequency is gradually increasing and reaches its highest frequency when the sound wave has maximum amplitude at time $T_2$. From time $T_2$ to $T_4$ the sound wave goes from maximum positive to maximum negative and the resulting oscillator frequency goes from a maximum frequency *above* the rest value to a maximum value *below* the rest frequency. At time $T_3$ the sound wave is passing through zero, and therefore the oscillator output is instantaneously equal to the carrier frequency.

The relationship for the FM signal generated by the capacitor microphone can be written as shown in Equation (1).

$$f_{out} = f_c + ke_i \tag{1}$$

where $f_{out}$ = instantaneous output frequency
$f_c$ = output carrier frequency
$k$ = deviation constant [kHz/V]
$e_i$ = modulating (intelligence) input

Equation 1 shows that the output carrier frequency ($f_c$) depends on the amplitude and the frequency of the modulating signal ($e_i$) and also on the frequency deviation generated by the microphone ($k$) for a given input level. The unit $k$ is called a deviation constant. This defines how much the carrier frequency will deviate (change) for a given input voltage level. The **deviation constant** ($k$) is defined in units of kHz/V. For example, if $k = 1$ kHz/10 mV, then a modulating signal input level of 20 mV will cause a 2-kHz frequency shift. A modulating signal input level of −20 mV will cause a −2-kHz frequency shift. Assuming that the 20-mV level is from a sinusoid (a sinusoid contains both a positive and negative peak), then the rate at which the frequency changes (deviates above and below the original carrier frequency) depends on the frequency of the modulating signal. For example, if a 20-mV, 500-Hz input signal is applied to the microphone, then the carrier frequency will deviate ±2 kHz at a rate of 500 Hz.

**Deviation Constant (*k*)**
how much the carrier frequency will deviate for a given modulating input voltage level

### Example 1

*A 25-mV sinusoid at a frequency of 400 Hz is applied to a capacitor microphone FM generator. If the deviation constant for the capacitor microphone FM generator is 750 Hz/10 mV, determine*
*(a) The frequency deviation generated by an input level of 25 mV.*
*(b) The rate at which the carrier frequency is being deviated.*

#### Solution

(a) positive frequency deviation $= 25 \text{ mV} \times \dfrac{750 \text{ Hz}}{10 \text{ mV}} = 1875 \text{ Hz}$ or $1.875 \text{ kHz}$

negative frequency deviation $= -25 \text{ mV} \times \dfrac{750 \text{ Hz}}{10 \text{ mV}} = -1875 \text{ Hz}$ or $-1.875 \text{ kHz}$

The total deviation is written as ±2.25 kHz for the given input signal level.

(b) The input frequency ($f_i$) is 400 Hz; therefore, by Equation (1)

$$f_{out} = f_c + ke_i \tag{1}$$

The carrier will deviate ±1.875 kHz at a rate of 400 Hz.

## The Two Major Concepts

The amount of oscillator frequency increase and decrease around $f_c$ is called the **frequency deviation,** $\delta$. This deviation is shown in Figure 2(c) as a function of time.

**Frequency Deviation**
amount of carrier frequency increase or decrease around its center reference value

Notice that this is a graph of frequency versus time—not the usual voltage versus time. It is ideally shown as a sine-wave replica of the original intelligence signal. It shows that the oscillator output is indeed an FM waveform. Recall that FM is defined as a sine-wave carrier that changes in frequency by an *amount* proportional to the instantaneous value of the intelligence wave and at a *rate* equal to the intelligence frequency.

Figure 2(d) shows the AM wave resulting from the intelligence signal shown in Figure 2(a). This should help you to see the difference between an AM and FM signal. In the case of AM, the carrier's amplitude is varied (by its sidebands) in step with the intelligence, while in FM, the carrier's frequency is varied in step with the intelligence.

The capacitor microphone FM generation system is seldom used in practical applications; its importance is derived from its relative ease of providing an understanding of FM basics. If the sound-wave intelligence striking the microphone were doubled in frequency from 1 kHz to 2 kHz with constant amplitude, the rate at which the FM output swings above and below the center frequency ($f_c$) would change from 1 kHz to 2 kHz. Because the intelligence amplitude was not changed, however, the *amount* of frequency deviation ($\delta$) above and below $f_c$ will remain the same. On the other hand, if the 1-kHz intelligence frequency were kept the same but its amplitude were doubled, the *rate* of deviation above and below $f_c$ would remain at 1 kHz, but the *amount* of frequency deviation would double.

As you continue through your study of FM, whenever you start getting bogged down on basic theory, it will often be helpful to review the capacitor mike FM generator. *Remember:*

1. The intelligence amplitude determines the *amount* of carrier frequency deviation.
2. The intelligence frequency ($f_i$) determines the *rate* of carrier frequency deviation.

**Example 2**

*An FM signal has a center frequency of 100 MHz but is swinging between 100.001 MHz and 99.999 MHz at a rate of 100 times per second. Determine:*
*(a) The intelligence frequency $f_i$.*
*(b) The intelligence amplitude.*
*(c) What happened to the intelligence amplitude if the frequency deviation changed to between 100.002 and 99.998 MHz.*

**Solution**

(a) Because the FM signal is changing frequency at a 100-Hz rate, $f_i = 100$ Hz.
(b) There is no way of determining the actual amplitude of the intelligence signal. Every FM system has a different proportionality constant between the intelligence amplitude and the amount of deviation it causes.
(c) The frequency deviation has now been doubled, which means that the intelligence amplitude is now double whatever it originally was.



## 3 FM Analysis

The complete mathematical analysis of angle modulation requires the use of high-level mathematics. For our purposes, it will suffice simply to give the solutions and discuss them. For phase modulation (PM), the equation for the instantaneous voltage is

$$e = A \sin(\omega_c t + m_p \sin \omega_i t) \quad \textbf{(2)}$$

where $e$ = instantaneous voltage
$A$ = peak value of original carrier wave
$\omega_c$ = carrier angular velocity ($2\pi f_c$)
$m_p$ = maximum phase shift caused by the intelligence signal (radians)
$\omega_i$ = modulating (intelligence) signal angular velocity ($2\pi f_i$)

The maximum phase shift caused by the intelligence signal, $m_p$, is defined as the **modulation index** for PM.

**Modulation Index**
measure of the extent to which a carrier is varied by the intelligence

The following equation provides the equivalent formula for FM:

$$e = A \sin(\omega_c t + m_f \sin \omega_i t) \quad \textbf{(3)}$$

All the terms in Equation (3) are defined as they were for Equation (2), with the exception of the new term, $m_f$. In fact, the two equations are identical except for that term. It is defined as the modulation index for FM, $m_f$. It is equal to

$$m_f = \text{FM modulation index} = \frac{\delta}{f_i} \quad \textbf{(4)}$$

where $\delta$ = maximum frequency shift caused by the intelligence signal (deviation)
$f_i$ = frequency of the intelligence (modulating) signal

Comparison of Equations (2) and (3) points out the only difference between PM and FM. The equation for PM shows that the phase of the carrier varies with the modulating signal amplitude (because $m_p$ is determined by this), and in FM the carrier phase is determined by the ratio of intelligence signal amplitude (which determines $\delta$) to the intelligence frequency ($f_i$). Thus, FM is *not* sensitive to the modulating signal frequency but PM *is*. The difference between them is subtle—in fact, if the intelligence signal is integrated and then allowed to phase-modulate the carrier, an FM signal is created. This is the method used in the Armstrong indirect FM system, as will be explained in Section 6. In FM the amount of deviation produced is not dependent on the intelligence frequency, as it is for PM. The amount of deviation is proportional to the intelligence signal amplitude for both PM and FM. These conditions are shown in Figure 3.

### FM Mathematical Solution

The FM formula [Equation (3)] is really more complex than it looks because it contains the sine of a sine. To solve for the frequency components of an FM wave requires the use of a high-level mathematical tool, **Bessel functions.** They show that frequency-modulating a carrier with a pure sine wave actually generates an

**Bessel Functions**
mathematical technique for determining the exact bandwidth of an FM signal

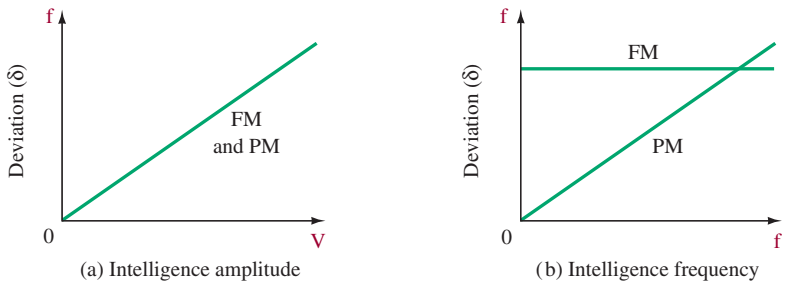


**FIGURE 3** Deviation effects on FM/PM by intelligence parameters: (a) intelligence amplitude; (b) intelligence frequency.

infinite number of sidebands (components) spaced at multiples of the intelligence frequency, $f_i$, above and below the carrier! Fortunately, the amplitude of these sidebands approaches a negligible level the farther away they are from the carrier, which allows FM transmission within finite bandwidths. The Bessel function solution to the FM equation is

$$\begin{aligned} f_c(t) = {} & J_0(m_f)\cos\omega_c t - J_1(m_f)[\cos(\omega_c - \omega_i)t - \cos(\omega_c + \omega_i)t] \\ & + J_2(m_f)[\cos(\omega_c - 2\omega_i)t + \cos(\omega_c + 2\omega_i)t] \\ & - J_3(m_f)[\cos(\omega_c - 3\omega_i)t + \cos(\omega_c + 3\omega_i)t] \\ & + \cdots \end{aligned} \tag{5}$$

where

$f_c(t)$ = FM frequency components

$J_0(m_f)\cos\omega_c t$ = carrier component

$J_1(m_f)[\cos(\omega_c - \omega_i)t - \cos(\omega_c + \omega_i)t]$ = first set of side frequencies at $\pm f_i$ above and below the carrier

$J_2(m_f)[cos(\omega_c - 2\omega_i)t + \cos(\omega_c + 2\omega_i)]t$ = second set of side frequencies at $\pm 2f_i$ above and below the carrier, etc.

To solve for the amplitude of any side-frequency component, $J_n$, the following equation should be applied:

$$J_n(m_f) = \left(\frac{m_f}{2}\right)^n \left[\frac{1}{n!} - \frac{(m_f/2)^2}{1!(n+1)!} + \frac{(m_f/2)^4}{2!(n+2)!} - \frac{(m_f/2)^6}{3!(n+3)!} + \cdots\right] \tag{6}$$

Thus, solving for these amplitudes is a very tedious process and is strictly dependent on the modulation index, $m_f$. Note that every component within the brackets is multiplied by the coefficient $(m_f/2)^n$. Table 2 gives the solution for several modulation indexes. Notice that for no modulation ($m_f = 0$), the carrier ($J_0$) is the only frequency present and exists at its full value of 1. However, as the carrier becomes modulated, energy is shifted from the carrier and into the sidebands. For $m_f = 0.25$, the carrier amplitude has dropped to 0.98, and the first side frequencies at $\pm f_i$ around the carrier ($J_1$) have an amplitude of 0.12. As indicated previously, FM generates an infinite number of sidebands, but in this case, $J_2$, $J_3$, $J_4$, . . . all have negligible value. Thus, an FM transmission with $m_f = 0.25$ requires the same bandwidth ($2f_i$) as an AM broadcast.

**Table 2** FM Side Frequencies from Bessel Functions

| | *n* OR ORDER | | | | | | | | | | | | | | | | |
|---|---|---|---|---|---|---|---|---|---|---|---|---|---|---|---|---|---|
| × ($m_f$) | (Carrier) $J_0$ | $J_1$ | $J_2$ | $J_3$ | $J_4$ | $J_5$ | $J_6$ | $J_7$ | $J_8$ | $J_9$ | $J_{10}$ | $J_{11}$ | $J_{12}$ | $J_{13}$ | $J_{14}$ | $J_{15}$ | $J_{16}$ |
| 0.00 | 1.00 | — | — | — | — | — | — | — | — | — | — | — | — | — | — | — | — |
| 0.25 | 0.98 | 0.12 | — | — | — | — | — | — | — | — | — | — | — | — | — | — | — |
| 0.5 | 0.94 | 0.24 | 0.03 | — | — | — | — | — | — | — | — | — | — | — | — | — | — |
| 1.0 | 0.77 | 0.44 | 0.11 | 0.02 | — | — | — | — | — | — | — | — | — | — | — | — | — |
| 1.5 | 0.51 | 0.56 | 0.23 | 0.06 | 0.01 | — | — | — | — | — | — | — | — | — | — | — | — |
| 2.0 | 0.22 | 0.58 | 0.35 | 0.13 | 0.03 | — | — | — | — | — | — | — | — | — | — | — | — |
| 2.5 | −0.05 | 0.50 | 0.45 | 0.22 | 0.07 | 0.02 | — | — | — | — | — | — | — | — | — | — | — |
| 3.0 | −0.26 | 0.34 | 0.49 | 0.31 | 0.13 | 0.04 | 0.01 | — | — | — | — | — | — | — | — | — | — |
| 4.0 | −0.40 | −0.07 | 0.36 | 0.43 | 0.28 | 0.13 | 0.05 | 0.02 | — | — | — | — | — | — | — | — | — |
| 5.0 | −0.18 | −0.33 | 0.05 | 0.36 | 0.39 | 0.26 | 0.13 | 0.05 | 0.02 | — | — | — | — | — | — | — | — |
| 6.0 | 0.15 | −0.28 | −0.24 | 0.11 | 0.36 | 0.36 | 0.25 | 0.13 | 0.06 | 0.02 | — | — | — | — | — | — | — |
| 7.0 | 0.30 | 0.00 | −0.30 | −0.17 | 0.16 | 0.35 | 0.34 | 0.23 | 0.13 | 0.06 | 0.02 | — | — | — | — | — | — |
| 8.0 | 0.17 | 0.23 | −0.11 | −0.29 | −0.10 | 0.19 | 0.34 | 0.32 | 0.22 | 0.13 | 0.06 | 0.03 | — | — | — | — | — |
| 9.0 | −0.09 | 0.24 | 0.14 | −0.18 | −0.27 | −0.06 | 0.20 | 0.33 | 0.30 | 0.21 | 0.12 | 0.06 | 0.03 | 0.01 | — | — | — |
| 10.0 | −0.25 | 0.04 | 0.25 | 0.06 | −0.22 | −0.23 | −0.01 | 0.22 | 0.31 | 0.29 | 0.20 | 0.12 | 0.06 | 0.03 | 0.01 | — | — |
| 12.0 | 0.05 | −0.22 | −0.08 | 0.20 | 0.18 | −0.07 | −0.24 | −0.17 | 0.05 | 0.23 | 0.30 | 0.27 | 0.20 | 0.12 | 0.07 | 0.03 | 0.01 |
| 15.0 | −0.01 | 0.21 | 0.04 | −0.19 | −0.12 | 0.13 | 0.21 | 0.03 | −0.17 | −0.22 | −0.09 | 0.10 | 0.24 | 0.28 | 0.25 | 0.18 | 0.12 |

Source: E. Cambi, *Bessel Functions,* Dover Publications, Inc., New York, 1948.

## Example 3

*Determine the bandwidth required to transmit an FM signal with $f_i = 10$ kHz and a maximum deviation $\delta = 20$ kHz.*

### Solution

$$m_f = \frac{\delta}{f_i} = \frac{20 \text{ kHz}}{10 \text{ kHz}} = 2 \tag{4}$$

From Table 2 with $m_f = 2$, the following significant components are obtained:

$$J_0, J_1, J_2, J_3, J_4$$

This means that besides the carrier, $J_1$ will exist $\pm 10$ kHz around the carrier, $J_2$ at $\pm 20$ kHz, $J_3$ at $\pm 30$ kHz, and $J_4$ at $\pm 40$ kHz. Therefore, the total required bandwidth is $2 \times 40 \text{ kHz} = 80$ kHz.

## Example 4

*Repeat Example 2 with $f_i$ changed to 5 kHz.*

### Solution

$$\begin{aligned} m_f &= \frac{\delta}{f_i} \\ &= \frac{20 \text{ kHz}}{5 \text{ kHz}} \\ &= 4 \end{aligned} \tag{4}$$

In Table 2, $m_f = 4$ shows that the highest significant side-frequency component is $J_7$. Since $J_7$ will be at $\pm 7 \times 5$ kHz around the carrier, the required BW is $2 \times 35 \text{ kHz} = 70$ kHz.

Examples 3 and 4 point out a confusing aspect about FM analysis. Deviation and bandwidth are related *but different*. They are related because deviation determines modulation index, which in turn determines significant sideband pairs. The bandwidth, however, is computed by sideband pairs and *not* deviation frequency. Notice in Example 3 that the maximum deviation was $\pm 20$ kHz, yet the bandwidth was 80 kHz. The deviation is *not* the bandwidth but *does* have an effect on the bandwidth.

**Carson's Rule**
equation for approximating the bandwidth of an FM signal

An approximation known as **Carson's rule** is often used to predict the bandwidth necessary for an FM signal:

$$\text{BW} \simeq 2(\delta_{\max} + f_{i_{\max}}) \tag{7}$$

This approximation includes about 98 percent of the total power; that is, about 2 percent of the power is in the sidebands outside its predicted BW. Reasonably good fidelity results when limiting the BW to that predicted by Equation (7). Referring back to Example 3, Carson's rule predicts a BW of 2(20 kHz +10 kHz) = 60 kHz versus the 80 kHz shown. In Example 4, BW = 2(20 kHz +5 kHz) = 50 kHz versus 70 kHz. It should be remembered that even the 70-kHz prediction does not include all of the sidebands created.

## Example 5

*An FM signal, 2000 sin($2\pi \times 10^8 t + 2 \sin \pi \times 10^4 t$), is applied to a 50-Ω antenna. Determine*

*(a) The carrier frequency.*
*(b) The transmitted power.*
*(c) $m_f$.*
*(d) $f_i$.*
*(e) BW (by two methods).*
*(f) Power in the largest and smallest sidebands predicted by Table 2.*

### Solution

(a) By inspection of the FM equation, $f_c = (2\pi \times 10^8)/2\pi = 10^8 = 100$ MHz.
(b) The peak voltage is 2000 V. Thus,

$$P = \frac{(2000/\sqrt{2})^2}{50\ \Omega} = 40\ \text{kW}$$

(c) By inspection of the FM equation, we have

$$m_f = 2 \tag{3}$$

(d) The intelligence frequency, $f_i$, is derived from the sin $\pi\ 10^4 t$ term [Equation (3)]. Thus,

$$f_i = \frac{\pi \times 10^4}{2\pi} = 5\ \text{kHz}$$

(e)
$$m_f = \frac{\delta}{f_i} \tag{4}$$

$$2 = \frac{\delta}{5\ \text{kHz}}$$

$$\delta = 10\ \text{kHz}$$

From Table 2 with $m_f = 2$, significant sidebands exist to $J_4$ ($4 \times 5$ kHz $= 20$ kHz). Thus, BW $= 2 \times 20$ kHz $= 40$ kHz. Using Carson's rule yields

$$\begin{aligned} \text{BW} &\simeq 2(\delta_{\max} + f_{i\max}) \\ &= 2(10\ \text{kHz} + 5\ \text{kHz}) = 30\ \text{kHz} \end{aligned} \tag{7}$$

(f) From Table 2, $J_1$ is the largest sideband at 0.58 times the unmodulated carrier amplitude.

$$p = \frac{(0.58 \times 2000/\sqrt{2})^2}{50\ \Omega} = 13.5\ \text{kW}$$

or $2 \times 13.5$ kW $= 27$ kW for the two sidebands at $\pm 5$ kHz from the carrier. The smallest sideband, $J_4$, is 0.03 times the carrier or $(0.03 \times 2000/\sqrt{2})^2/50\ \Omega = 36$ W.

## Zero-Carrier Amplitude

Figure 4 shows the FM frequency spectrum for various levels of modulation while keeping the modulation frequency constant. The relative amplitude of all components is obtained from Table 2. Notice from the table that between $m_f = 2$ and

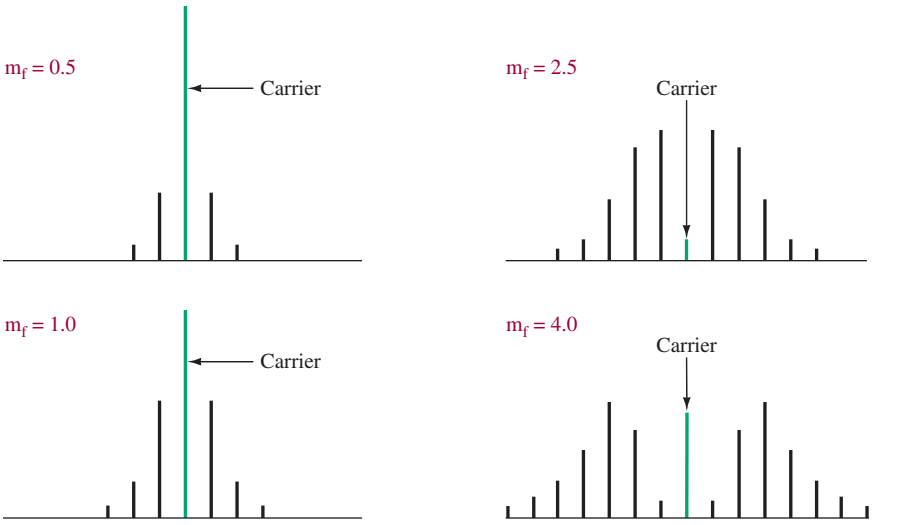


**FIGURE 4** Frequency spectrum for FM (constant modulating frequency, variable deviation).

$m_f = 2.5$, the carrier goes from a plus to a minus value. The minus sign simply indicates a phase reversal, but when $m_f = 2.4$, the carrier component has zero amplitude and all the energy is contained in the side frequencies. This also occurs when $m_f = 5.5$, 8.65, and between 10 and 12, and 12 and 15.

The zero-carrier condition suggests a convenient means of determining the deviation produced in an FM modulator. A carrier is modulated by a single sine wave at a known frequency. The modulating signal's amplitude is varied while observing the generated FM on a spectrum analyzer. At the point where the carrier amplitude goes to zero, the modulation index, $m_f$, is determined based on the number of sidebands displayed. If four or five sidebands appear on both sides of the nulled carrier, you can assume that $m_f = 2.4$. The deviation, $\delta$, is then equal to $2.4 \times f_i$. The modulating signal could be increased in amplitude, and the next carrier null should be at $m_f = 5.5$. A check on modulator linearity is thereby possible because the frequency deviation should be directly proportional to the modulating signal's amplitude.

## Broadcast FM

Standard broadcast FM uses a 200-kHz bandwidth for each station. This is a very large allocation when one considers that one FM station has a bandwidth that could contain many standard AM stations. Broadcast FM, however, allows for a true high-fidelity modulating signal up to 15 kHz and offers superior noise performance (see Section 4).

**Guard Bands**
25-kHz bands at each end of a broadcast FM channel to help minimize interference with adjacent stations

Figure 5 shows the FCC allocation for commercial FM stations. The maximum allowed deviation around the carrier is $\pm 75$ kHz, and 25-kHz **guard bands** at the upper and lower ends are also provided. The carrier is required to maintain a $\pm 2$-kHz stability. Recall that an infinite number of side frequencies are generated during frequency modulation, but their amplitude gradually decreases as you move

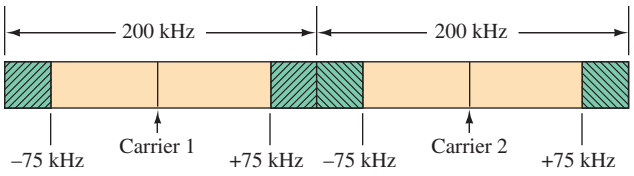


FIGURE 5 Commercial FM bandwidth allocations for two adjacent stations.

away from the carrier. In other words, the significant side frequencies exist up to ±75 kHz around the carrier, and the guard bands ensure that adjacent channel interference will not be a problem.

Since full deviation ($\delta$) is 75 kHz, that is 100 percent modulation. By definition, 100 percent modulation in FM is when the deviation is the full permissible amount. Recall that the modulation index, $m_f$, is

$$m_f = \frac{\delta}{f_i} \tag{4}$$

so that the actual modulation index at 100 percent modulation varies inversely with the intelligence frequency, $f_i$. This is in contrast with AM, where full or 100 percent modulation means a modulation index of 1 regardless of intelligence frequency.

Another way to describe the modulation index is by **deviation ratio (DR).** Deviation ratio equals the result of dividing the maximum possible frequency deviation by the maximum input frequency, as shown in Equation (8).

**Deviation Ratio (DR)**
maximum possible frequency deviation over the maximum input frequency

$$\text{DR} = \frac{\text{maximum possible frequency deviation}}{\text{maximum input frequency}} = \frac{f_{\text{dev(max)}}}{f_{i\text{(max)}}} \tag{8}$$

*Deviation ratio* is a commonly used term in both television and FM broadcasting. For example, broadcast FM radio permits a maximum carrier frequency deviation, $f_{\text{dev(max)}}$, of ±75 kHz and a maximum audio input frequency, $f_{i\text{(max)}}$ of 15 kHz. Therefore, for broadcast FM radio, the deviation ratio (DR) is

$$\text{DR (broadcast FM radio)} = \frac{75 \text{ kHz}}{15 \text{ kHz}} = 5$$

and for broadcast television (NTSC format), the maximum frequency deviation of the aural carrier, $f_{\text{dev(max)}}$ is ±25 kHz with a maximum audio input frequency, $f_{i\text{(max)}}$, of 15 kHz. Therefore, for broadcast TV (NTSC format), the deviation ratio (DR) is

$$\text{DR (TV NTSC)} = \frac{25 \text{ kHz}}{15 \text{ kHz}} = 1.67$$

FM systems that have a deviation ratio greater than or equal to 1 (DR ≥ 1) are considered to be **wideband** systems, whereas FM systems that have a deviation ratio less than 1 (DR < 1) are considered to be narrowband FM systems.

**Wideband FM**
a system where the deviation ratio is ≥ 1

## Narrowband FM

**Narrowband FM**
FM signals used for voice transmissions such as public service communication systems

Frequency modulation is also widely used in communication (i.e., not to entertain) systems such as those used by police, aircraft, taxicabs, weather service, and private industry networks. These applications are often voice transmissions, which means that intelligence frequency maximums of 3 kHz are the norm. These are **narrowband FM** systems because Federal Communications Commission (FCC) bandwidth allocations of 10 to 30 kHz are provided. Narrowband FM (NBFM) systems operate with a modulation index of 0.5 to 1.0. A glance at the Bessel functions in Table 2 shows that at these index values, only the first set ($J_1$) of side frequencies has a significant amplitude; the second ($J_2$) and third ($J_3$) lose amplitude quickly. Thus, we see that NBFM has a bandwidth no wider than an AM signal.

### Example 6

*(a) Determine the permissible range in maximum modulation index for commercial FM that has 30-Hz to 15-kHz modulating frequencies.*
*(b) Repeat for a narrowband system that allows a maximum deviation of 1-kHz and 100-Hz to 2-kHz modulating frequencies.*
*(c) Determine the deviation ratio for the system in part (b).*

#### Solution

(a) The maximum deviation in broadcast FM is 75 kHz.

$$m_f = \frac{\delta}{f_i} \tag{4}$$
$$= \frac{75 \text{ kHz}}{30 \text{ Hz}} = 2500$$

For $f_i = 15$ kHz:

$$m_f = \frac{75 \text{ kHz}}{15 \text{ kHz}} = 5$$

(b)
$$m_f = \frac{\delta}{f_i} = \frac{1 \text{ kHz}}{100 \text{ Hz}} = 10$$

For $f_i = 2$ kHz:

$$m_f = \frac{1 \text{ kHz}}{2 \text{ kHz}} = 0.5$$

(c)
$$\text{DR} = \frac{f_{\text{dev(max)}}}{f_{i\text{(max)}}} = \frac{1 \text{ kHz}}{2 \text{ kHz}} = 0.5 \tag{8}$$

### Example 7

*Determine the relative total power of the carrier and side frequencies when $m_f = 0.25$ for a 10-kW FM transmitter.*

### Solution

For $m_f = 0.25$, the carrier is equal to 0.98 times its unmodulated amplitude and the only significant sideband is $J_1$, with a relative amplitude of 0.12 (from Table 2). Therefore, because power is proportional to the voltage squared, the carrier power is

$$(0.98)^2 \times 10 \text{ kW} = 9.604 \text{ kW}$$

and the power of each sideband is

$$(0.12)^2 \times 10 \text{ kW} = 144 \text{ W}$$

The total power is

$$\begin{aligned} 9604 \text{ W} + 144 \text{ W} + 144 \text{ W} &= 9.892 \text{ kW} \\ &\cong 10 \text{ kW} \end{aligned}$$

The result of Example 7 is predictable. In FM, the transmitted waveform never varies in amplitude, just frequency. Therefore, the total transmitted power must remain constant regardless of the level of modulation. It is thus seen that whatever energy is contained in the side frequencies has been obtained from the carrier. No additional energy is added during the modulation process. The carrier in FM is not redundant as in AM because its (the carrier's) amplitude is dependent on the intelligence signal.

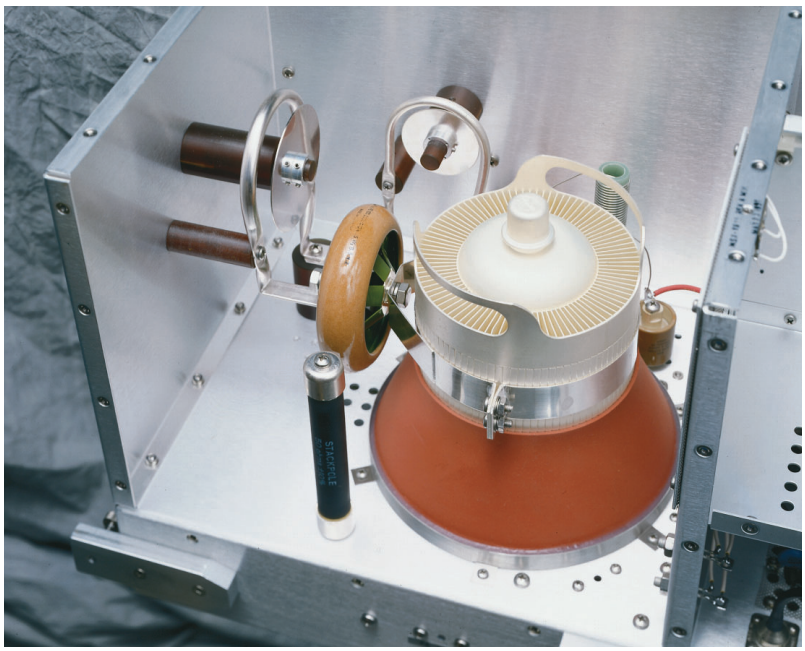

The final power stage of a 20-kW amplifier uses a tube as the active element. (Courtesy of ETO, Inc.—An ASTEX Company.)



## 4 Noise Suppression

The most important advantage of FM over AM is the superior noise characteristics. You are probably aware that static noise is rarely heard on FM, although it is quite common in AM reception. You may be able to guess a reason for this improvement. The addition of noise to a received signal causes a change in its amplitude. Since the amplitude changes in AM contain the intelligence, any attempt to get rid of the noise adversely affects the received signal. However, in FM, the intelligence is *not* carried by amplitude changes but instead by frequency changes. The spikes of external noise picked up during transmission are clipped off by a **limiter** circuit and/or through the use of detector circuits that are insensitive to amplitude changes.

**Limiter**
stage in an FM receiver that removes any amplitude variations of the received FM signal before it reaches the discriminator

Figure 6(a) shows the noise removal action of an FM limiter circuit, while in Figure 6(b) the noise spike feeds right through to the speaker in an AM system. The advantage for FM is clearly evident; in fact, you may think that the limiter removes all the effects of this noise spike. While it is possible to clip the noise spike off, it still causes an undesired phase shift and thus frequency shift of the FM signal, and this frequency shift *cannot* be removed.

The noise signal frequency will be close to the frequency of the desired FM signal due to the selective effect of the tuned circuits in a receiver. In other words, if you are tuned to an FM station at 96 MHz, the receiver's selectivity provides gain only for frequencies near 96 MHz. The noise that will affect this reception must, therefore, also be around 96 MHz because all other frequencies will be greatly attenuated. The effect of adding the desired *and* noise signals will give a resultant signal with a different phase angle than the desired FM signal alone. Therefore, the noise signal, even though it is clipped off in amplitude, will cause phase modulation (PM), which indirectly causes undesired FM. The amount of frequency deviation (FM) caused by PM is

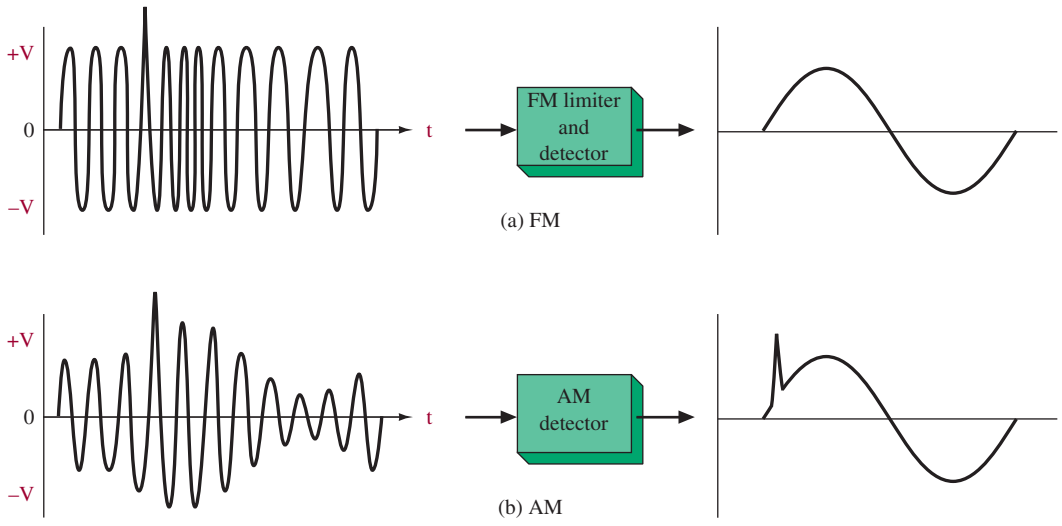


FIGURE 6 FM, AM noise comparison.

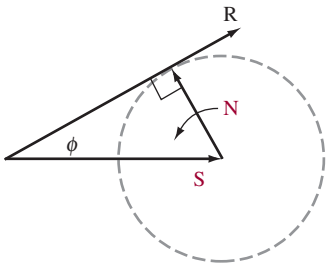


FIGURE 7 Phase shift ($\phi$) as a result of noise.

$$\delta = \phi \times f_i \tag{9}$$

where $\delta$ = frequency deviation
$\phi$ = phase shift (radians)
$f_i$ = frequency of intelligence signal

## FM Noise Analysis

The phase shift caused by the noise signal results in a frequency deviation that is predicted by Equation (9). Consider the situation illustrated in Figure 7. Here the noise signal is one-half the desired signal amplitude, which provides a voltage *S/N* ratio of 2:1. This is an intolerable situation in AM but, as the following analysis will show, is not so bad in FM.

Because the noise (*N*) and desired signal (*S*) are at different frequencies (but in the same range, as dictated by a receiver's tuned circuits), the noise is shown as a rotating vector using the *S* signal as a reference. The phase shift of the resultant (*R*) is maximum when *R* and *N* are at right angles to one another. At this worst-case condition

$$\phi = \sin^{-1}\frac{N}{S} = \sin^{-1}\frac{1}{2}$$
$$= 30°$$

or 30°/(57.3° per radian) = 0.52 rad, or about $\frac{1}{2}$ rad.

If the intelligence frequency, $f_i$, were known, then the deviation ($\delta$) caused by this severe noise condition could now be calculated using Equation (9). Since $\delta = \phi \times f_i$, the worst-case deviation occurs for the maximum intelligence frequency. Assuming an $f_i$ maximum of 15 kHz, the absolute worst case $\delta$ due to this severe noise signal is

$$\delta = \phi \times f_i = 0.5 \times 15 \text{ kHz} = 7.5 \text{ kHz}$$

In standard broadcast FM, the maximum modulating frequency is 15 kHz and the maximum allowed deviation is 75 kHz above and below the carrier. Thus, a 75-kHz deviation corresponds to maximum modulating signal amplitude and full volume at the receiver's output. The 7.5-kHz worst-case deviation output due to the *S/N* = 2 condition is

$$\frac{7.5 \text{ kHz}}{75 \text{ kHz}} = \frac{1}{10}$$

and, therefore, the 2:1 signal-to-noise ratio results in an output signal-to-noise ratio of 10:1. This result assumes that the receiver's internal noise is negligible. Thus, FM is seen to exhibit a very strong capability to nullify the effects of noise! In AM, a 2:1 signal-to-noise ratio at the input essentially results in the same ratio at the output. Thus, FM is seen to have an inherent noise reduction capability not possible with AM.

## Example 8

*Determine the worst-case output S/N for a broadcast FM program that has a maximum intelligence frequency of 5 kHz. The input S/N is 2.*

### Solution

The input $S/N = 2$ means that the worst-case deviation is about $\frac{1}{2}$ rad (see the preceding paragraphs). Therefore.

$$\begin{aligned}\delta &= \phi \times f_i \\ &= 0.5 \times 5 \text{ kHz} = 2.5 \text{ kHz}\end{aligned} \tag{9}$$

Because full volume in broadcast FM corresponds to a 75-kHz deviation, this 2.5-kHz worst-case noise deviation means that the output *S/N* is

$$\frac{75 \text{ kHz}}{2.5 \text{ kHz}} = 30$$

Example 8 shows that the inherent noise reduction capability of FM is improved when the maximum intelligence (modulating) frequency is reduced. A little thought shows that this capability can also be improved by increasing the maximum allowed frequency deviation from the standard 75-kHz value. An increase in allowed deviation means that increased bandwidths for each station would be necessary, however. In fact, many FM systems utilized as communication links operate with decreased bandwidths—narrowband FM systems. It is typical for them to operate with a 10-kHz maximum deviation. The inherent noise reduction of these systems is reduced by the lower allowed $\delta$ but is somewhat offset by the lower maximum modulating frequency of 3 kHz usually used for voice transmissions.

## Example 9

*Determine the worst-case output S/N for a narrowband FM receiver with $\delta_{max} = 10$ kHz and a maximum intelligence frequency of 3 kHz. The S/N input is 3:1.*

### Solution

The worst-case phase shift ($\phi$) due to the noise occurs when $\phi = \sin^{-1}(N/S)$.

$$\phi = \sin^{-1}\frac{1}{3} = 19.5°, \text{ or } 0.34 \text{ rad}$$

and

$$\begin{aligned}\delta &= \phi \times f_i \\ &= 0.34 \times 3 \text{ kHz} \cong 1 \text{ kHz}\end{aligned} \tag{9}$$

The *S/N* output will be

$$\frac{10 \text{ kHz}}{1 \text{ kHz}} = 10$$

and thus the input signal-to-noise ratio of 3 is transformed to 10 or higher at the output.

## Capture Effect

This inherent ability of FM to minimize the effect of undesired signals (noise in the preceding paragraphs) also applies to the reception of an undesired station operating at the same or nearly the same frequency as the desired station. This is known as the **capture effect.** You may have noticed when riding in a car that an FM station is suddenly replaced by a different one. You may even find that the receiver alternates abruptly back and forth between the two. This occurs because the two stations are presenting a variable signal as you drive. The capture effect causes the receiver to lock on the stronger signal by suppressing the weaker but can fluctuate back and forth when the two are nearly equal. When they are not nearly equal, however, the inherent FM noise suppression action is very effective in preventing the interference of an unwanted (but weaker) station. The weaker station is suppressed just as noise was in the preceding noise discussion. FM receivers typically have a **capture ratio** of 1 dB—this means suppression of a 1-dB (or more) weaker station is accomplished. In AM, it is not uncommon to hear two separate broadcasts at the same time, but this is certainly a rare occurrence with FM.

**Capture Effect**
an FM receiver phenomenon that involves locking onto the stronger of two received signals of the same frequency and suppressing the weaker signal

**Capture Ratio**
the necessary difference (in dB) of signal strength to allow suppression of a weaker signal from a stronger one

The capture effect can also be illustrated by Figure 8. Notice that the *S/N* before and after demodulation for SSB and AM is linear. Assuming noiseless demodulation schemes, SSB (and DSB) has the same *S/N* at the detector's input and output. The degradation shown for AM is due to so much of the signal's power being wasted in the redundant carrier. FM systems with $m_f$ greater than 1 show an actual improvement in *S/N*, as illustrated in Examples 8 and 9. For example, consider $m_f = 5$ in Figure 8. When *S/N* before demodulation is 20, the *S/N* after demodulation is about 38—a significant improvement.

Insight into the capture effect is provided by consideration of the inflection point (often termed **threshold**) shown in Figure 8. Notice that a rapid degradation

**Threshold**
in FM, the point where *S/N* in the output rapidly degrades as *S/N* of received signal is degrading

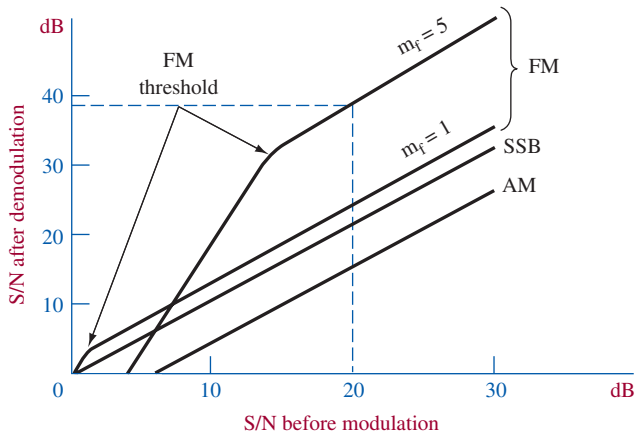


FIGURE 8 *S/N* for basic modulation schemes.

in *S/N* after demodulation results when the noise approaches the same level as the desired signal. This threshold situation is noticeable when driving in a large city. The fluttering noise often heard is caused when the FM signal is reflecting off various structures. The signal strength fluctuates widely due to the additive or subtractive effects on the total received signal. The effect can cause the output to blank out totally and resume at a rapid rate as the *S/N* before demodulation moves back and forth through the threshold level.

## Preemphasis

The noise suppression ability of FM has been shown to decrease with higher intelligence frequencies. This is unfortunate because the higher intelligence frequencies tend to be of lower amplitude than the low frequencies. Thus, a high-pitched violin note that the human ear may perceive as the same "sound" level as the crash of a bass drum may have only half the electrical amplitude as the low-frequency drum signal. In FM, half the amplitude means half the deviation and, subsequently, half the noise reduction capability. To counteract this effect, almost all FM transmissions provide an artificial boost to the electrical amplitude of the higher frequencies. This process is termed *preemphasis*.

**Preemphasis**
process in an FM transmitter that amplifies high-frequency more than low-frequency audio signals to reduce the effect of noise

**Deemphasis**
process in an FM receiver that reduces the amplitudes of high-frequency audio signals down to their original values to counteract the effect of the preemphasis network in the transmitter

By definition, **preemphasis** involves increasing the relative strength of the high-frequency components of the audio signal before it is fed to the modulator. Thus, the relationship between the high-frequency intelligence components and the noise is altered. While the noise remains the same, the desired signal strength is increased.

A potential disadvantage, however, is that the natural balance between high- and low-frequency tones at the receiver would be altered. A **deemphasis** circuit in the receiver, however, corrects this defect by reducing the high-frequency audio by the same amount as the preemphasis circuit increased it, thus regaining the original tonal balance. In addition, the deemphasis network operates on both the high-frequency signal and the high-frequency noise; therefore, there is no change in the improved signal-to-noise ratio. The main reason for the preemphasis network, then, is to prevent the high-frequency components of the transmitted intelligence from being degraded by noise that would otherwise have more effect on the higher than on the lower intelligence frequencies.

The deemphasis network is normally inserted between the detector and the audio amplifier in the receiver. This ensures that the audio frequencies are returned to their original relative level before amplification. The preemphasis characteristic curve is flat up to 500 Hz, as shown in Figure 9. From 500 to 15,000 Hz, there is a sharp increase in gain up to approximately 17 dB. The gain at these frequencies is necessary to maintain the signal-to-noise ratio at high audio frequencies. The frequency characteristic of the deemphasis network is directly opposite to that of the preemphasis network. The high-frequency response decreases in proportion to its increase in the preemphasis network. The characteristic curve of the deemphasis circuit should be a mirror image of the preemphasis characteristic curve. Figure 9 shows the pre- and deemphasis curves as used by standard FM broadcasts in the United States. As shown, the 3-dB points occur at 2120 Hz, as predicted by the *RC* time constant ($\tau$) of 75 $\mu$s used to generate them.

$$f = \frac{1}{2\pi RC} = \frac{1}{2\pi \times 75\ \mu\text{s}} = 2120\ \text{Hz}$$

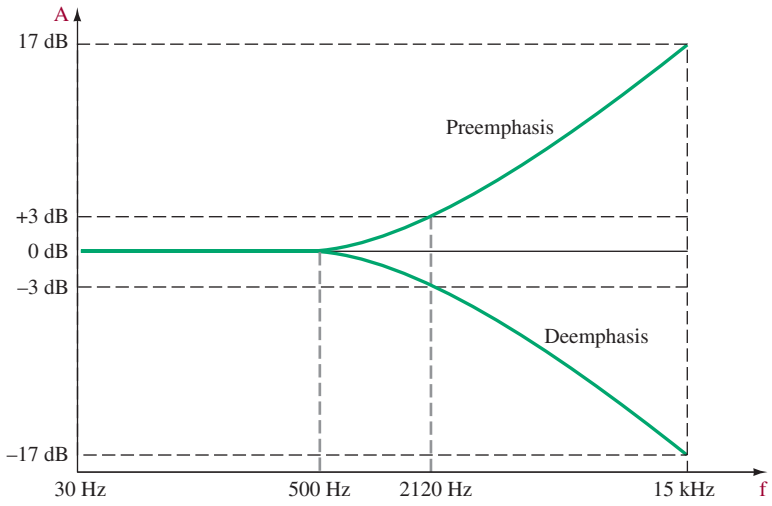


FIGURE 9 Emphasis curves ($\tau = 75\ \mu s$).

Figure 10(a) shows a typical preemphasis circuit. The impedance to the audio voltage is mainly that of the parallel circuit of $C$ and $R_1$ because the effect of $R_2$ is small in comparison to that of either $C$ or $R_1$. Since capacitive reactance is inversely proportional to frequency, audio frequency increases cause the reactance of $C$ to decrease. This decrease of $X_C$ provides an easier path for high frequencies as compared to $R$. Thus, with an increase of audio frequency, there is an increase in signal voltage. The result is a larger voltage drop across $R_2$ (the amplifier's input) at the higher frequencies and thus greater output.

Figure 10(b) depicts a typical deemphasis network. Note the physical position of $R$ and $C$ in relation to the base of the transistor. As the frequency of the audio signal increases, the reactance of capacitor $C$ decreases. The voltage division

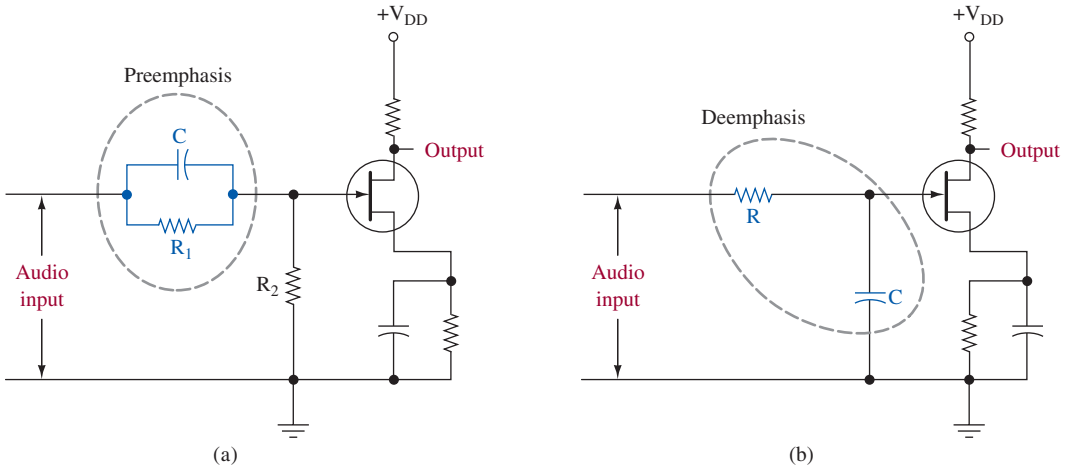


FIGURE 10 Emphasis circuits.

between *R* and *C* now provides a smaller drop across *C*. The audio voltage applied to the base decreases; therefore, a reverse of the preemphasis circuit is accomplished. For the signal to be exactly the same as before preemphasis and deemphasis, the time constants of the two circuits must be equal to each other.

## Dolby System

**Dolby System**
advanced noise reduction system in FM systems in which the preemphasis and deemphasis networks work in a dynamic manner

The FCC has ruled that FM broadcast stations can, if desired, use a 25-$\mu$s time constant. They then must use the **Dolby system,** which works like preemphasis but in a dynamic fashion. The amount of preemphasis (and subsequent deemphasis in a Dolby receiver) varies depending on the loudness level at any instant. Maximum noise reduction of this system is realized by listeners in fringe areas where noise effects are most detrimental. Those people with regular 75-$\mu$s, non-Dolby receivers do not seem to be adversely affected but will usually turn down their treble control somewhat.

The Dolby system used by FM transmitters is not concerned primarily with noise reduction, however. Standard 75-$\mu$s preemphasis provides the same amount of boost to both weak and strong high-frequency signals. This created no real problem years ago because few, if any, high frequencies were strong anyway. The better-quality recordings of today do offer some fairly strong high frequencies. Their strength, combined with 75-$\mu$s preemphasis, now causes excessive bandwidth of the transmitted FM signal, and thus a station is forced to lower the strength of all signals. To counteract this effect, the transmitting station will artificially reduce the strength of high-frequency signals, resulting in a less-than-true signal reproduction (and less dynamic range) at the receiver.

The Dolby solution to this problem is to provide varying degrees of high-frequency boost, as depicted in Figure 11. The Dolby receiver must reverse these characteristics and thus requires some relatively complex circuitry. Notice how the weak high frequencies are given a significantly greater boost than the stronger ones. The overall result of this system is a stronger received FM signal with greater

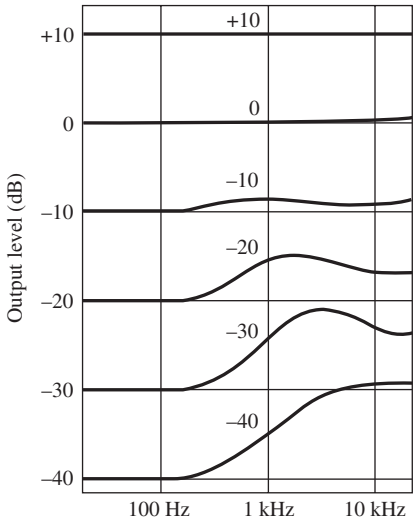


FIGURE 11 Dolby dynamic preemphasis.

dynamic range as compared to a broadcast signal, which unnaturally attenuates the high frequencies. The Dolby system is also highly effective in minimizing high-frequency tape hiss noise in tape players.



## 5 Direct FM Generation

The capacitance microphone system explained in Section 2 can be used to generate FM directly. Recall that the capacitance of the microphone varies in step with the sound wave striking it. Figure 1 showed that if the amplitude of sound striking it is increased, the amount of deviation of the oscillator's frequency is increased. If the frequency of sound waves is increased, the rate of the oscillator's deviation is increased. This system is useful in explaining the principles of an FM signal but is not normally used to generate FM in practical systems. It is not able to produce enough deviation as required in actual applications.

### Varactor Diode

A varactor diode may be used to generate FM directly. All reverse-biased diodes exhibit a junction capacitance that varies inversely with the amount of reverse bias. A diode that is physically constructed to enhance this characteristic is termed a **varactor diode.** Figure 12 shows a schematic of a varactor diode modulator. With no intelligence signal ($E_i$) applied, the parallel combination of $C_1$, $L_1$, and $D_1$'s capacitance forms the resonant carrier frequency. The diode $D_1$ is effectively in parallel with $L_1$ and $C_1$ because the $-V_{CC}$ supply appears as a short circuit to the ac signal. The coupling capacitor, $C_C$, isolates the dc levels and intelligence signal while looking like a short to the high-frequency carrier. When the intelligence

**Varactor Diode**
diode with a small internal capacitance that varies as a function of its reverse bias voltage

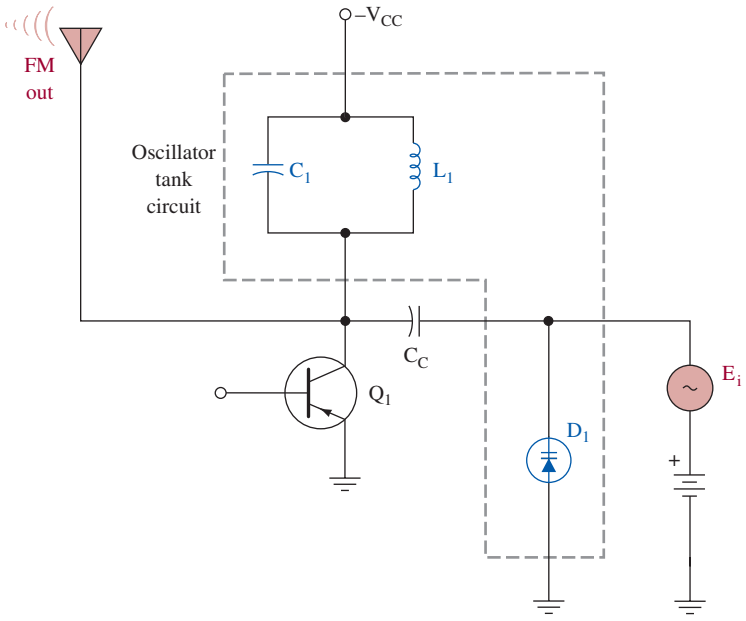


FIGURE 12 Varactor diode modulator.

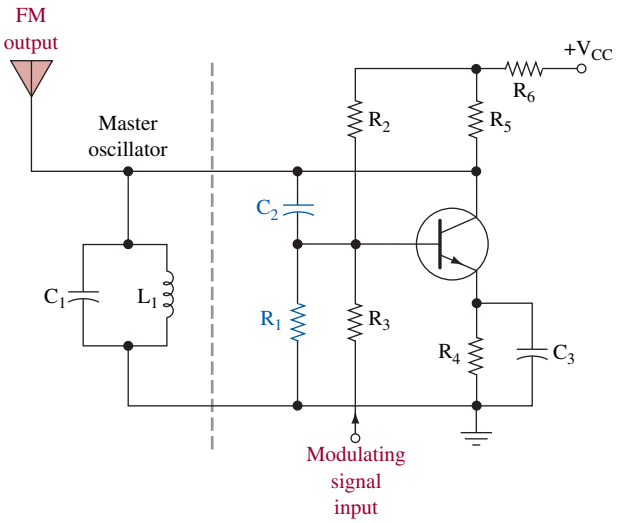


FIGURE 13 Reactance modulator.

signal, $E_i$, is applied to the varactor diode, its reverse bias is varied, which causes the diode's junction capacitance to vary in step with $E_i$. The oscillator frequency is subsequently varied as required for FM, and the FM signal is available at $Q_1$'s collector. For simplicity, the dc bias and oscillator feedback circuitry is not shown in Figure 12. While the varactor diode modulator can be called a **reactance modulator,** the term is usually applied to those in which an active device is made to look like a variable reactance. The reactance modulator (see Figure 13) is a very popular means of FM generation. The troubleshooting section at the end of this chapter provides details on the operation and repair of a reactance modulator.

**Reactance Modulator**
amplifier designed so that its input impedance has a reactance that varies as a function of the amplitude of the applied input voltage

## LIC VCO FM Generation

**Voltage-Controlled Oscillator**
designed so that its output voltage varies as a function of the amplitude of the applied input voltage

A **voltage-controlled oscillator** (VCO) produces an output frequency that is directly proportional to a control voltage level. The circuitry necessary to produce such an oscillator with a high degree of linearity between control voltage and frequency was formerly prohibitive on a discrete component basis, but now that low-cost monolithic LIC VCOs are available, they make FM generation extremely simple. Figure 14 provides the specifications for the Philips Semiconductors NE/SE566 VCO. The circuit shown at the end of the specifications provides a high-quality FM generator with the modulating voltage applied to $C_2$. The FM output can be taken at pin 4 (triangle wave) or pin 3 (square wave). Feeding either of these two outputs into an *LC* tank circuit resonant at the VCO center frequency (i.e., carrier) will subsequently provide a standard sinusoidal FM signal by the flywheel effect.

## Crosby Modulator

Now that three practical methods of FM generation have been shown—varactor diode, reactance modulator, and the VCO—it is time to consider the weakness of these methods. Notice that in no case was a crystal oscillator used as the basic reference or carrier frequency. The stability of the carrier frequency is very tightly

# Function generator NE/SE566

## DESCRIPTION

The NE/SE566 Function Generator is a voltage-controlled oscillator of exceptional linearity with buffered square wave and triangle wave outputs. The frequency of oscillation is determined by an external resistor and capacitor and the voltage applied to the control terminal. The oscillator can be programmed over a ten-to-one frequency range by proper selection of an external resistance and modulated over a ten-to-one range by the control voltage, with exceptional linearity.

## FEATURES

- Wide range of operating voltage (up to 24V; single or dual)
- High linearity of modulation
- Highly stable center frequency (200ppm/•C typical)
- Highly linear triangle wave output
- Frequency programming by means of a resistor or capacitor, voltage or current
- Frequency adjustable over 10-to-1 range with same capacitor

## PIN CONFIGURATIONS

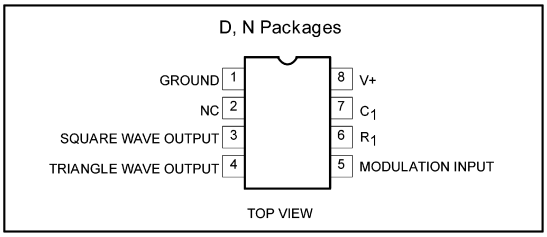


## APPLICATIONS

- Tone generators
- Frequency shift keying
- FM modulators
- Clock generators
- Signal generators
- Function generators

## ORDERING INFORMATION

| DESCRIPTION | TEMPERATURE RANGE | ORDER CODE | DWG # |
|---|---|---|---|
| 8-Pin Plastic Small Outline (SO) Package | 0 to +70•C | NE566D | 0174C |
| 14-Pin Ceramic Dual In-Line Package (CERDIP) | 0 to +70•C | NE566F | 0581B |
| 8-Pin Plastic Dual In-Line Package (DIP) | 0 to +70•C | NE566N | 0404B |
| 8-Pin Plastic Dual In-Line Package (DIP) | -55•C to +125•C | SE566N | 0404B |

## BLOCK DIAGRAM

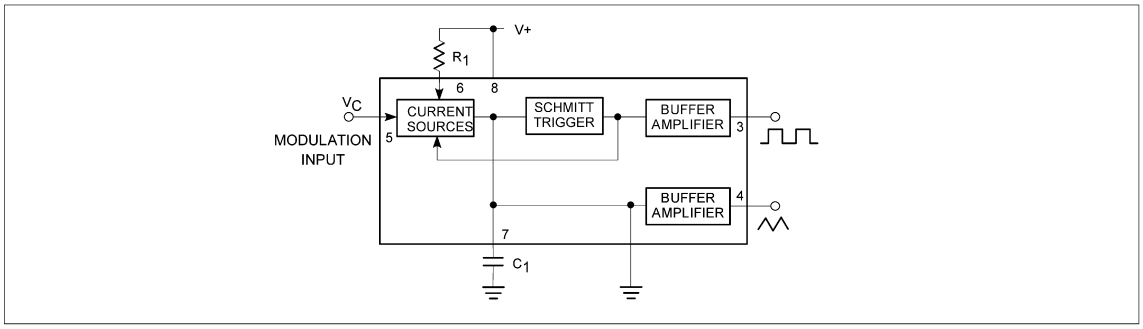


*(Continued)*

FIGURE 14 The NE/SE566 VCO specifications. (Courtesy of Philips Semiconductors.)

## EQUIVALENT SCHEMATIC

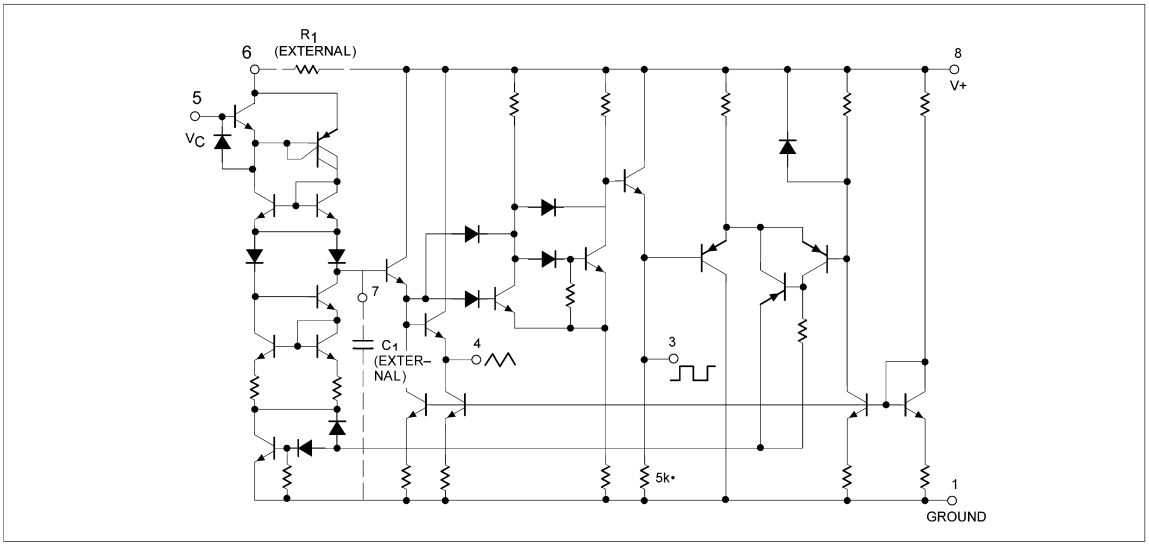


## ABSOLUTE MAXIMUM RATINGS

| SYMBOL | PARAMETER | RATING | UNIT |
|---|---|---|---|
| V+ | Maximum operating voltage | 26 | V |
| $V_{IN}$, $V_C$ | Input voltage | 3 | $V_{P-P}$ |
| $T_{STG}$ | Storage temperature range | -65 to +150 | °C |
| $T_A$ | Operating ambient temperature range | | |
| | NE566 | 0 to +70 | °C |
| | SE566 | -55 to +125 | °C |
| $P_D$ | Power dissipation | 300 | mW |

## TYPICAL PERFORMANCE CHARACTERISTICS

Normalized Frequency as a Function of Control Voltage

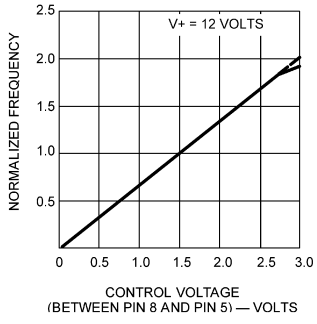


Normalized Frequency as a Function of Resistance (R1)

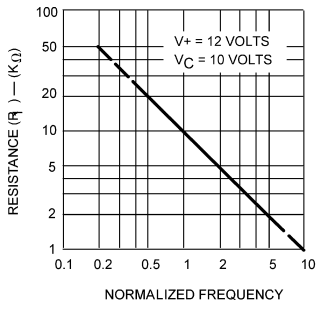


Change in Frequency as a Function of Temperature

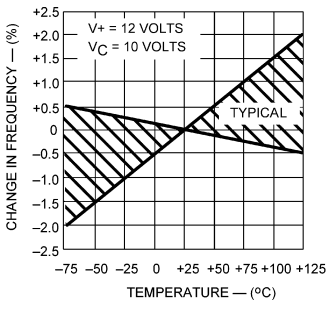


*(Continued)*

FIGURE 14 *(Continued)*

TYPICAL PERFORMANCE CHARACTERISTICS *(Continued)*

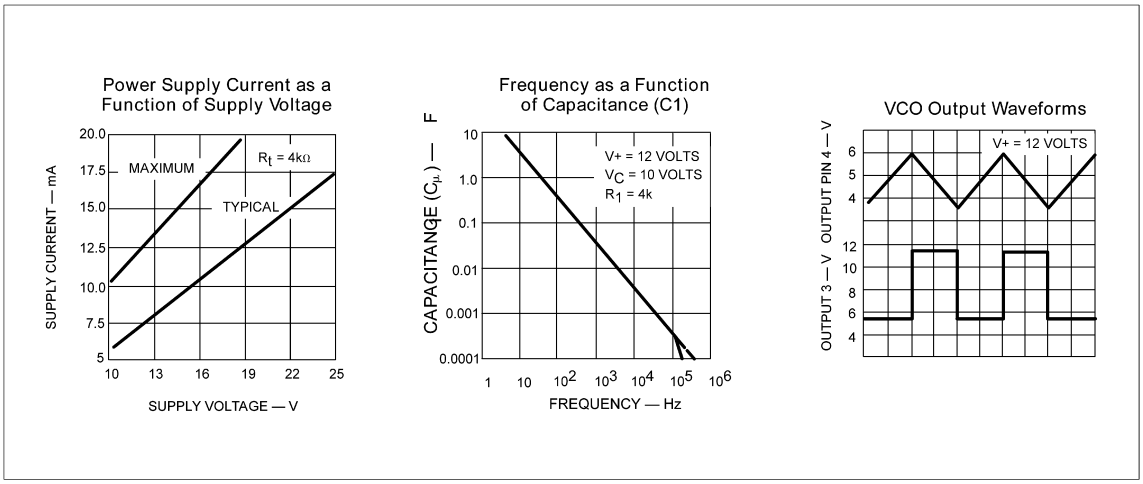


## OPERATING INSTRUCTIONS

The NE/SE566 Function Generator is a general purpose voltage-controlled oscillator designed for highly linear frequency modulation. The circuit provides simultaneous square wave and triangle wave outputs at frequencies up to 1MHz. A typical connection diagram is shown in Figure 1. The control terminal (Pin 5) must be biased externally with a voltage ($V_C$) in the range

$$V+ \leq V_C \leq V+$$

where $V_{CC}$ is the total supply voltage. In Figure 1, the control voltage is set by the voltage divider formed with $R_2$ and $R_3$. The modulating signal is then AC coupled with the capacitor $C_2$. The modulating signal can be direct coupled as well, if the appropriate DC bias voltage is applied to the control terminal. The frequency is given approximately by

$$f_o = \frac{2\,[(V+) - (V_C)]}{R_1\,C_1\,V+}$$

and $R_1$ should be in the range $2k\Omega < R_1 < 20k\Omega$.

A small capacitor (typically 0.001μF) should be connected between Pins 5 and 6 to eliminate possible oscillation in the control current source.

If the VCO is to be used to drive standard logic circuitry, it may be desirable to use a dual supply as shown in Figure 2. In this case the square wave output has the proper DC levels for logic circuitry. RTL can be driven directly from Pin 3. For DTL or TTL gates, which require a current sink of more than 1mA, it is usually necessary to connect a 5kΩ resistor between Pin 3 and negative supply. This increases the current sinking capability to 2mA. The third type of interface shown uses a saturated transistor between the 566 and the logic circuitry. This scheme is used primarily for TTL circuitry which requires a fast fall time (<50ns) and a large current sinking capability.

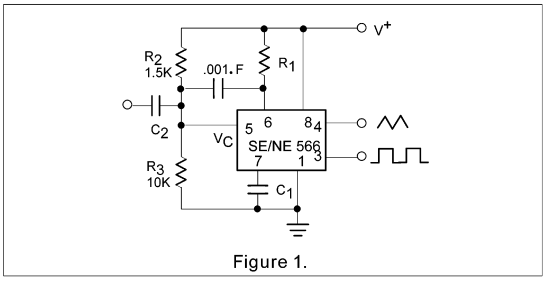


Figure 1.

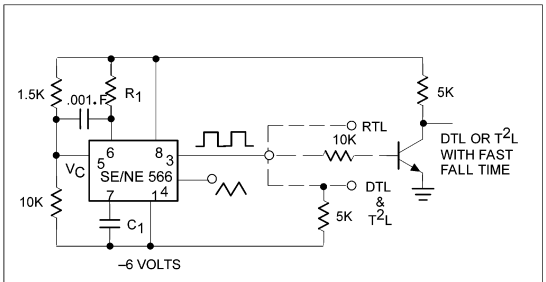


Figure 2.

FIGURE 14 *(Continued)*

controlled by the FCC, and that stability is not attained by any of the methods described thus far. Because of the high *Q* of crystal oscillators, it is not possible to frequency-modulate them directly—their frequency cannot be made to deviate sufficiently to provide workable wideband FM systems. It is possible to modulate directly a crystal oscillator in some narrowband applications. If a crystal is modulated to a deviation of ±50 Hz around a 5-MHz center frequency and both are

**Automatic Frequency Control**
negative feedback control system used in Crosby FM transmitters to achieve high-frequency stability of the carrier

**Crosby Systems**
FM systems using direct FM modulation with AFC to control for carrier drift

**Frequency Multipliers**
amplifiers designed so that the output signal's frequency is an integer multiple of the input frequency

multiplied by 100, a narrowband system with a 500-MHz carrier ±5-kHz deviation results. One method of circumventing this dilemma for wideband systems is to provide some means of **automatic frequency control** (AFC) to correct any carrier drift by comparing it to a reference crystal oscillator.

FM systems utilizing direct generation with AFC are called **Crosby systems.** A Crosby direct FM transmitter for a standard broadcast station at 90 MHz is shown in Figure 15. Notice that the reactance modulator starts at an initial center frequency of 5 MHz and has a maximum deviation of ±4.167 kHz. This is a typical situation because reactance modulators cannot provide deviations exceeding about ±5 kHz and still offer a high degree of linearity (i.e., $\Delta f$ directly proportional to the modulating voltage amplitude). Consequently, **frequency multipliers** are utilized to provide a ×18 multiplication up to a carrier frequency of 90 MHz (18 × 5 MHz) with a ±75-kHz (18 × 4.167 kHz) deviation. Notice that both the carrier and deviation are multiplied by the multiplier.

Frequency multiplication is normally obtained in steps of ×2 or ×3 (doublers or triplers). The principle involved is to feed a frequency rich in harmonic distortion (i.e., from a class C amplifier) into an *LC* tank circuit tuned to two or three

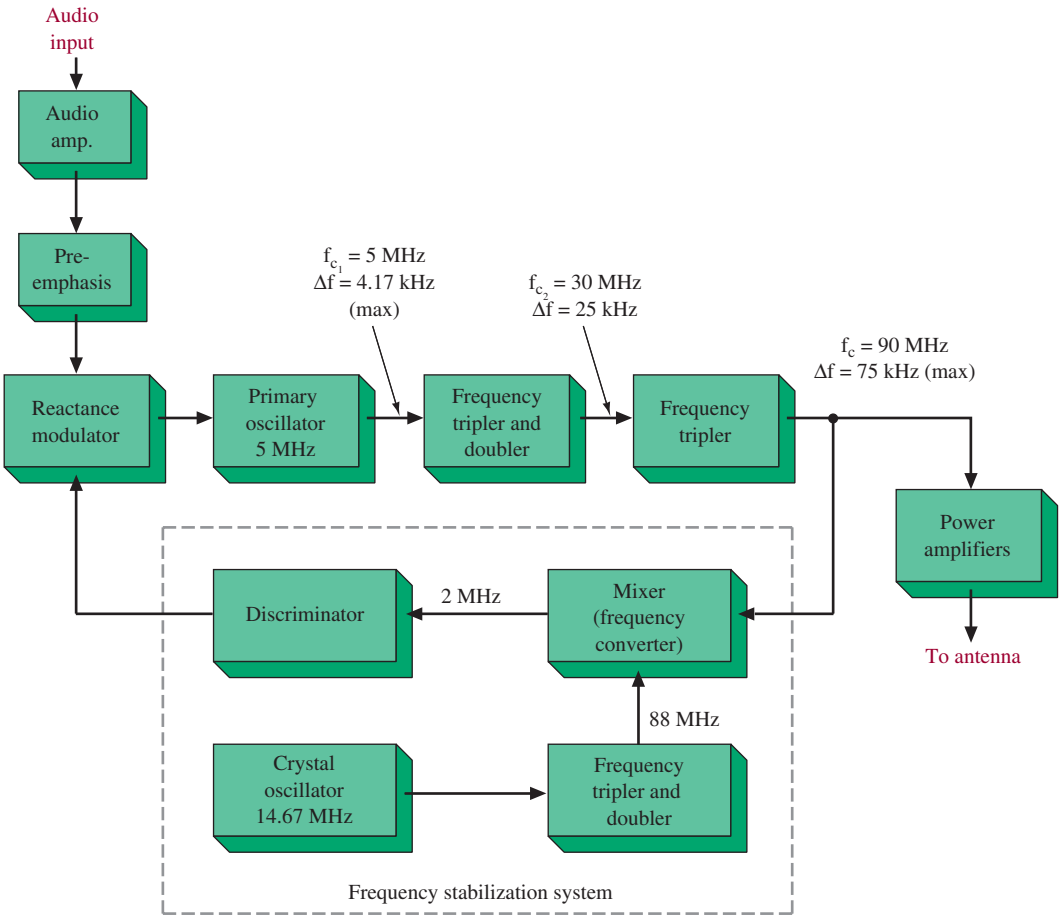


FIGURE 15 Crosby direct FM transmitter.

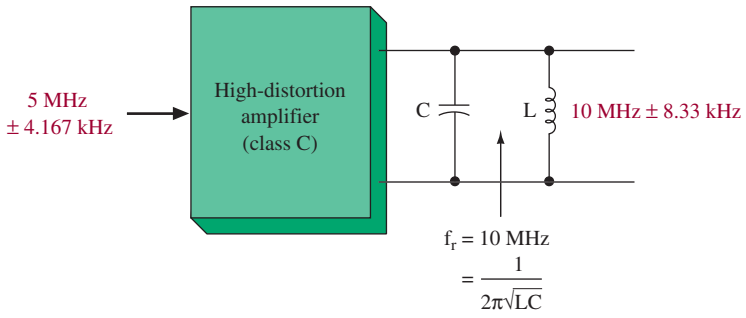


FIGURE 16 Frequency multiplication (doubler).

times the input frequency. The harmonic is then the only significant output, as illustrated in Figure 16.

After the ×18 multiplication (3 × 2 × 3) shown in Figure 15, the FM *exciter* function is complete. The term **exciter** is often used to denote the circuitry that generates the modulated signal. The excited output goes to the power amplifiers for transmission *and* to the frequency stabilization system. The purpose of this system is to provide a control voltage to the reactance modulator whenever it drifts from its desired 5-MHz value. The control (AFC) voltage then varies the reactance of the primary 5-MHz oscillator slightly to bring it back on frequency.

**Exciter**
stages necessary in a transmitter to create the modulated signal before subsequent amplification

The mixer in Figure 15 has the 90-MHz carrier and 88-MHz crystal oscillator signal as inputs. The mixer output accepts only the difference component of 2 MHz, which is fed to the discriminator. A **discriminator** is the opposite of a VCO, because it provides a dc level output based on the frequency input. The discriminator output in Figure 15 will be zero if it has an input of exactly 2 MHz, which occurs when the transmitter is at precisely 90 MHz. Any carrier drift up or down causes the discriminator output to go positive or negative, resulting in the appropriate primary oscillator readjustment.

**Discriminator**
stage in an FM receiver that creates an output dc level that varies as a function of its input frequency



## 6 Indirect FM Generation

If the phase of a crystal oscillator's output is varied, phase modulation (PM) will result. As discussed previously, changing the phase of a signal indirectly causes its frequency to be changed. We thus find that direct modulation of a crystal is possible via PM, which indirectly creates FM. This indirect method of FM generation is usually referred to as the **Armstrong** type, after its originator, E. H. Armstrong. It permits modulation of a stable crystal oscillator without the need for the cumbersome AFC circuitry and also provides carrier accuracies identical to the crystal accuracy, as opposed to the slight degradation of the Crosby system's accuracy.

**Armstrong Modulator**
FM transmitter that uses a phase modulator that feeds the intelligence signal through a low-pass filter integrator network to convert PM to FM

A simple Armstrong modulator is depicted in Figure 17. The JFET is biased in the ohmic region by keeping $V_{DS}$ low. In that way it presents a resistance from drain to source that is made variable by the gate voltage (the modulating signal). In the ohmic region, the drain-to-source resistance for a JFET transistor behaves like a voltage-controlled resistance (a variable resistor). The resistance value is controlled by the gate voltage ($V_{GS}$), where a change in the gate voltage will create a

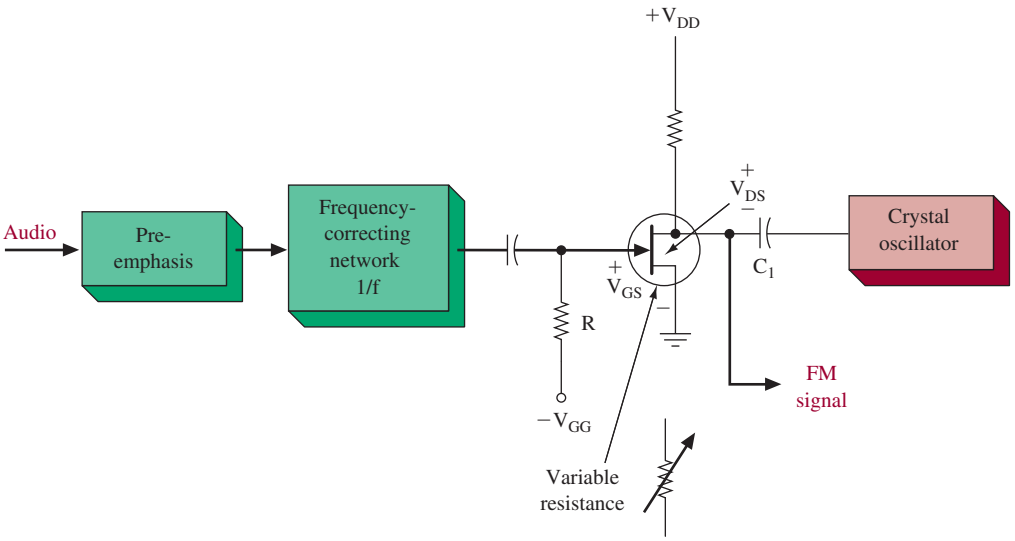


FIGURE 17 Indirect FM via PM (Armstrong modulator).

change in the drain-to-source resistance. Notice that the modulating signal is first given the standard preemphasis and then applied to a frequency-correcting network. This network is a low-pass *RC* circuit (an integrator) that makes the audio output amplitude inversely proportional to its frequency. This is necessary because in phase modulation, the frequency deviation created is not only proportional to modulating signal amplitude (as desired for FM) but also to the modulating signal frequency (undesired for FM). Thus, in PM if a 1-V, 1-kHz modulating signal caused a 100-Hz deviation, a 1-V, 2-kHz signal would cause a 200-Hz deviation instead of the same deviation of 100 Hz if that signal were applied to the 1/*f* network.

In summary, the Armstrong modulator of Figure 17 indirectly generates FM by changing the phase of a crystal oscillator's output. That phase change is accomplished by varying the phase angle of an *RC* network ($C_1$ and the JFET's resistance), in step with the frequency-corrected modulating signal.

## Obtaining Wideband Deviation

The indirectly created FM is not capable of much frequency deviation. A typical deviation is 50 Hz out of 1 MHz (50 ppm). Thus, even with a $\times 90$ frequency multiplication, a 90-MHz station would have a deviation of $90 \times 50$ Hz $= 4.5$ kHz. This may be adequate for narrowband communication FM but falls far short of the 75-kHz deviation required for broadcast FM. A complete Armstrong FM system providing a 75-kHz deviation is shown in Figure 18. It uses a balanced modulator and 90° phase shifter to phase-modulate a crystal oscillator. Sufficient deviation is obtained by a combination of multipliers and mixing. The $\times 81$ multipliers ($3 \times 3 \times 3 \times 3$) raise the initial 400-kHz $\pm$ 14.47-Hz signal to 32.4 MHz $\pm$ 1172 Hz. The carrier *and* deviation are multiplied by 81. Applying this signal to the mixer, which also has a crystal oscillator signal input of 33.81 MHz, provides an output component (among others) of 33.81 MHz $-$ (32.4 MHz $\pm$ 1172 Hz), or 1.41 MHz $\pm$ 1172 Hz. Notice that the mixer output changes the center frequency *without* changing the

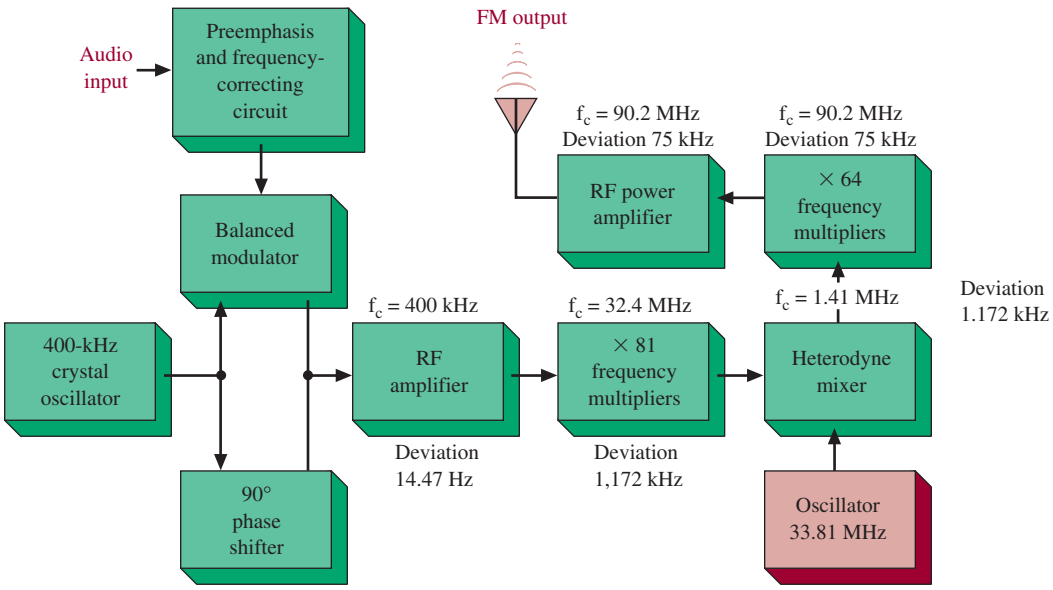


FIGURE 18 Wideband Armstrong FM.

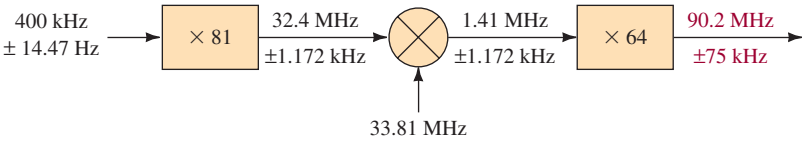


FIGURE 19 The pump chain for the wideband Armstrong FM system.

deviation. Following the mixer, the ×64 multipliers accept only the mixer difference output component of 1.41 MHz ± 1172 Hz and raise that to (64 × 1.41 MHz) ± (64 × 1172 Hz), or the desired 90.2 MHz ± 75 kHz.

The electronic circuitry used to increase the operating frequency of a transmitter up to a specified value is called the **pump chain.** A block diagram of the pump chain for the wideband Armstrong FM system is shown in Figure 19.

**Pump Chain**
electronic circuitry used to increase the operating frequency up to a specified value



## 7 Phase-Locked-Loop FM Transmitter

### Block Diagram

The block diagram shown in Figure 20 provides a very practical way to fabricate an FM transmitter. The amplified audio signal is used to frequency-modulate a crystal oscillator. The crystal frequency is pulled slightly by the variable capacitance exhibited by the varactor diode. The approximate ±200-Hz deviation possible in this fashion is adequate for narrowband systems. The FM output from the crystal oscillator is then divided by 2 and applied as one of the inputs to the phase detector of a phase-locked-loop (PLL) system. As indicated in Figure 20, the other input to the phase detector is the same, and its output is therefore (in this case) the original audio

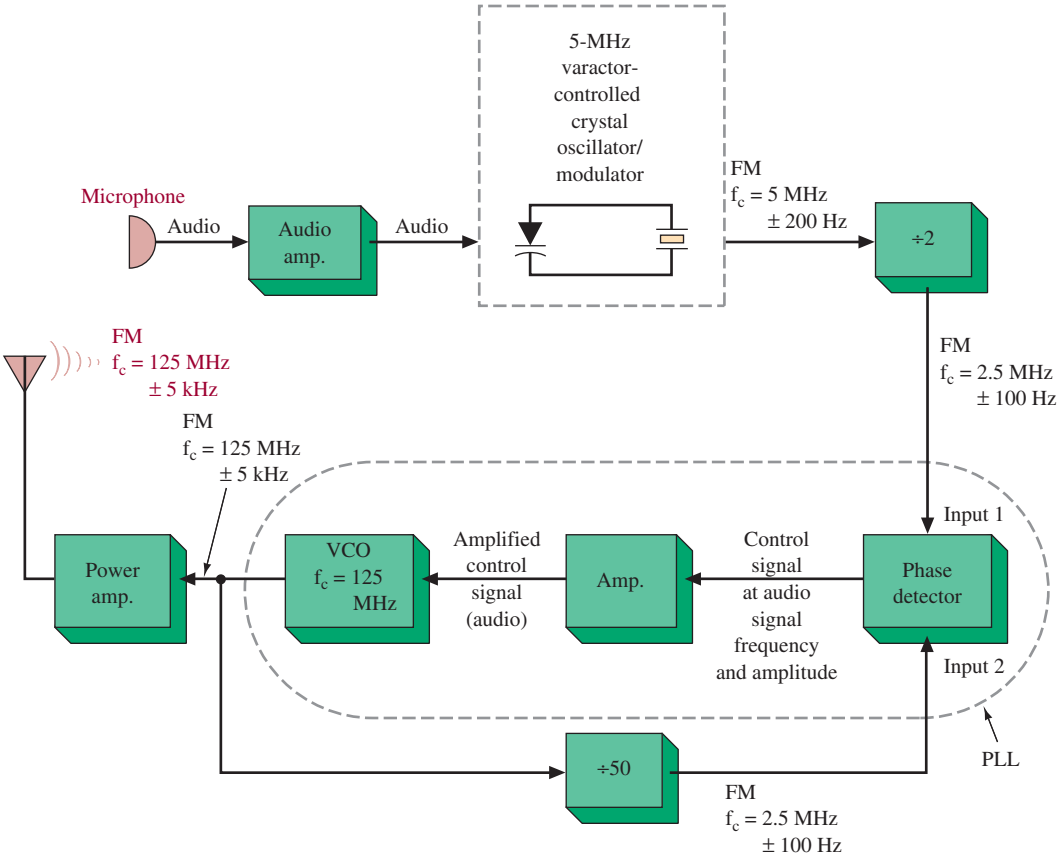


FIGURE 20 PLL FM transmitter block diagram.

signal. The input control signal to the VCO is therefore the same audio signal, and its output will be its free-running value of 125 MHz ±5 kHz, which is set up to be exactly 50 times the 2.5-MHz value of the divided-by-2 crystal frequency of 5 MHz.

The FM output signal from the VCO is given power amplification and then driven into the transmitting antenna. This output is also sampled by a ÷50 network, which provides the other FM signal input to the phase detector. The PLL system effectively provides the required ×50 multiplication but, more important, provides the transmitter's required frequency stability. Any drift in the VCO center frequency causes an input to the phase detector (input 2 in Figure 20) that is slightly different from the exact 2.5-MHz crystal reference value. The phase detector output therefore develops an error signal that corrects the VCO center frequency output back to exactly 125 MHz. This dynamic action of the phase detector/VCO and feedback path is the basis of a PLL.

## Circuit Description

The circuit schematic shown in Figure 21 is a practical working system for the block diagram of Figure 20. The crystal frequency is labeled 5 MHz to help you correlate to the block diagram in Figure 20. The actual crystal frequency is to be 5.76–5.92 MHz

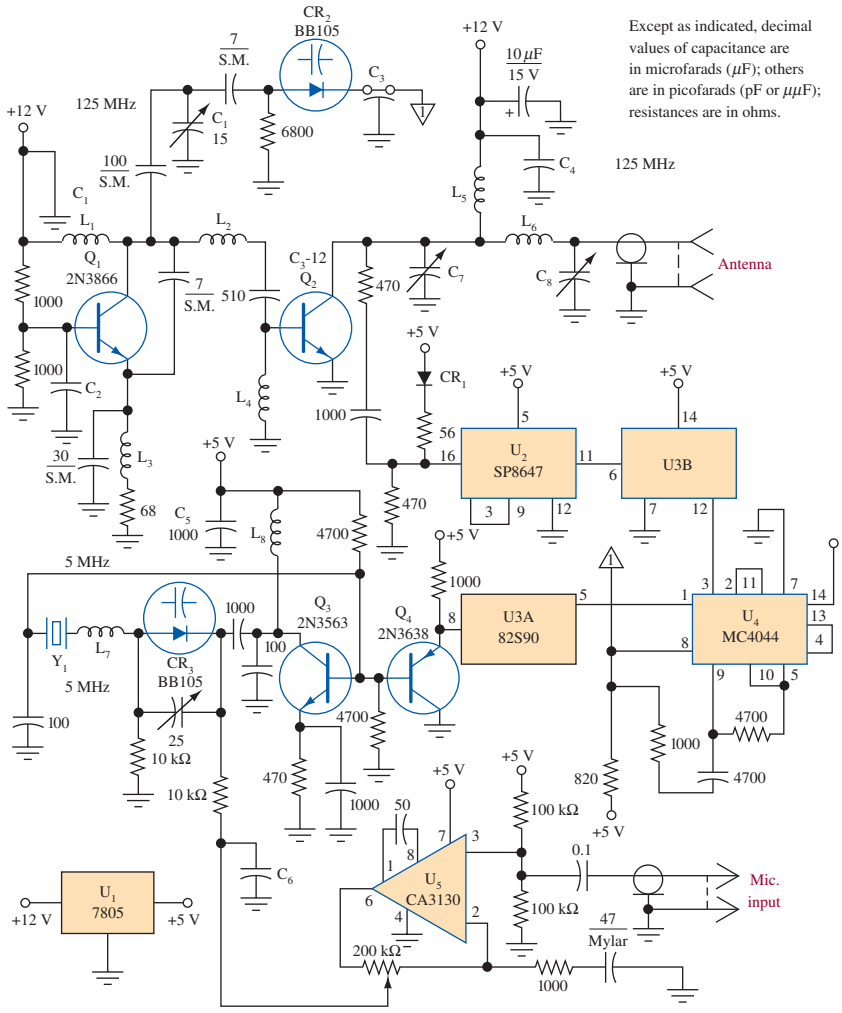


$C_1$–$C_6$, incl.–1000-pF ceramic feedthrough capacitors.
$C_7$, $C_8$–14- to 150-pF ceramic trimmer (Arco 424).
$CR_2$, $CR_3$–BB105 or Motorola MV839 Varicap diode, 82 pF nominal capacitance, 73.8- to 90.2-pF total range.
$L_1$, $L_3$, $L_7$–33-μH molded inductor (Miller 9230-56).
$L_2$–1-1/2 turns No. 20 enameled wire, 1/4-in. diameter, 1/2-in. long.
$L_4$–3 turns No. 28 enameled wire through ferrite bead.
$L_5$–2.2-μH molded inductor (Miller 9230-28).
$L_6$–1-1/2 turns No. 20 enameled wire, 3/8-inch diameter, 1 in. long.
$L_8$–100-μF molded inductor (Miller 9230-68).
$Q_1$–RCA 2N3866 or Motorola HEP S3008 transistor.
$Q_2$–$C_3$-12, manufactured by Communications Transistor Corp., a division of Varian. An RCA 2N5913 may be substituted.
$Q_3$, $Q_4$ –RCA transistor
$U_1$–5-V, 1-A fixed positive regulator. An LM309K may be substituted.
$U_2$–Plessey Semiconductors integrated circuit.
$U_3$–Signetics 82S90 or National DM73LS196 integrated circuit.
$U_4$–Motorola MC4044 integrated circuit.
$U_5$–RCA-CA3130 integrated circuit.
$Y_1$–Overtone Crystal, 5.76-5.92 MHz, International Crystal Mfg. Co. Type GP.

**FIGURE 21** PLL FM transmitter schematic.

for the circuit values shown in Figure 21. Similarly, the VCO frequency is really 146 MHz, rather than the 125 MHz shown. This circuitry approach eliminates the cumbersome oscillator–multiplier chain approach and allows for a very compact transmitter. The microphone input is amplified by $U_5$, which is an RCA CA3130 IC. Its output is used to pull the varactor-controlled crystal oscillator package comprising $Y_1$, $CR_3$, and $Q_3$. Its output is amplified by $Q_4$ and then divided by 2 by the $U_{3A}$ IC. Refer back to the block diagram in Figure 20 as an aid in this circuit description. The output of the $U_{3A}$ is applied as one of the inputs to the $U_4$ phase detector amplifier IC. The $U_4$ output at pin 8 is applied to the VCO made up of varactor diode $CR_2$ and $Q_1$. Its output (about 200 mW) is applied to the power amplifier stage ($Q_2$), which provides about 2 W into the antenna. Its output is sampled by the $U_2$ IC, which is an emitter-coupled logic (ECL) device that provides a ÷10 function at frequencies up to 250 MHz. Its output is then ÷5 by the TTL $U_{3B}$ IC and applied as the other input to the $U_4$ phase detector/amplifier IC. The values in this schematic are selected for operation on the 146-MHz amateur band, but operation can be accomplished at up to 250 MHz, with the $U_2$ ECL divider IC being the limiting upper frequency factor.

## Alignment and Operation

The reference crystal frequency is determined by dividing the desired operating frequency by 25. Varactor voltage is monitored with a DMM or oscilloscope while $C_1$ is varied through its range. If the loop is locked, the varactor voltage will vary with adjustment of $C_1$ and should be adjusted to 2.5 V. The transmitter should be terminated in a nonreactive 50-Ω load and the RF amplifier adjusted for maximum power output. Some means of determining deviation will be necessary, and the transmitter will then be ready for use.

## Operation on Other Bands

A transmitter may be constructed for use on the 200-MHz band by redesigning the oscillator and RF amplifier tuned circuits to resonate in that band. $Q_1$ and $Q_2$ will operate efficiently at frequencies up to 400 MHz. Crystal frequency is determined in the manner indicated previously. If separate oscillator–amplifier modules are constructed for 144 and 200 MHz, or perhaps even 50 MHz, and switched electronically with ECL gates, it is possible to operate on several bands with the same phase-locked-loop components, at a considerable cost savings. It is also possible to select a low-power oscillator and an unmodulated crystal oscillator to generate the LO signal for a receiver. ECL dividers are available that allow application of this circuit at higher frequencies, but a frequency division of more than 50 is required so that the maximum operating frequency of $U_4$ is not exceeded.

## Single-Chip FM Transmitter

An FM transmitter circuit using the Maxim 2606 is shown in Figure 22. This is a low-power FM transmitter operating in the FM broadcast band (88–108 MHz). The circuit runs off a supply voltage from 3 to 5 V connected to pin 5. The left and right audio channels are conncted to resistors R3 and R4, with potentiometer R2 serving as the volume control. Potentiometer R1 is used to select the channel by adjusting

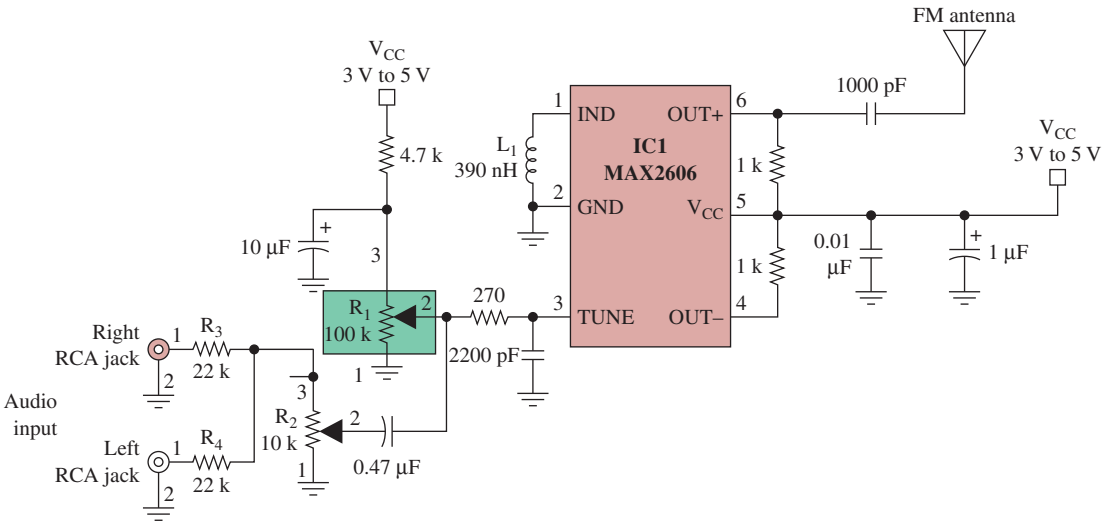


FIGURE 22 The MAX 2606 single-chip FM transmitter.

the tuning voltage applied to the TUNE input (pin 3) to the MAX2606 IC. The TUNE input drives a voltage-controlled oscillator with an integrated varactor. An FM antenna connects to pin 6 through the 1000 pF capacitor.



## 8 Stereo FM

The advent of stereo records and tapes and the associated high-fidelity playback equipment in the 1950s led to the development of stereo FM transmissions as authorized by the FCC in 1961. Stereo systems involve generating two separate signals, as from the left and right sides of a concert hall performance. When played back on left and right speakers, the listener gains greater spatial dimension or directivity.

A stereo radio broadcast requires that two separate 30-Hz to 15-kHz signals be used to modulate the carrier so that the receiver can extract the left and right channel information and amplify them separately into their respective speakers. In essence, then, the amount of information to be transmitted is doubled in a stereo broadcast. Hartley's law tells us that either the bandwidth or time of transmission must therefore be doubled, but this is not practical. The problem was solved by making more efficient use of the available bandwidth (200 kHz) by **frequency multiplexing** the two required modulating signals. **Multiplex operation** is the simultaneous transmission of two or more signals on one carrier.

**Frequency Multiplexing** process of combining signals that are at slightly different frequencies to allow transmission over a single medium

**Multiplex Operation** simultaneous transmission of two or more signals in a single medium

### Modulating Signal

The system approved by the FCC is *compatible* because a stereo broadcast received by a normal FM receiver will provide an output equal to the sum of the left plus right channels (L + R), while a stereo receiver can provide separate left and right channel signals. The stereo transmitter has a modulating signal, as shown in Figure 23. Notice that the sum of the L + R modulating signal extends from 30 Hz to 15 kHz as does

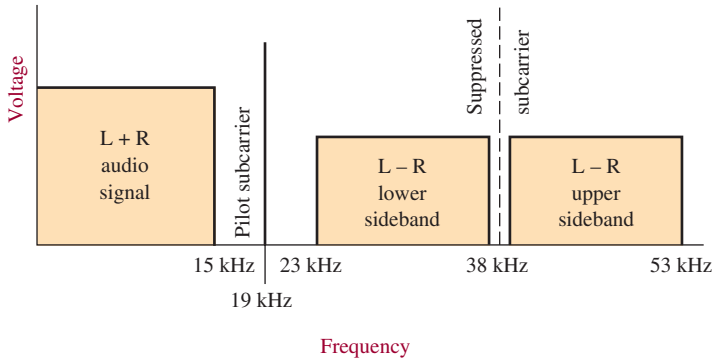


FIGURE 23 Composite modulating signals.

the full audio signal used to modulate the carrier in standard FM broadcasts. However, a signal corresponding to the left channel minus right channel (L − R) extends from 23 to 53 kHz. In addition, a 19-kHz pilot subcarrier is included in the composite stereo modulating signal.

The reasons for the peculiar arrangement of the stereo modulating signal are beyond the scope of this chapter. Suffice it to say that two different signals (L + R and L − R) are used to modulate the carrier. The signal is an example of **frequency-division multiplexing** because two different signals are multiplexed together by having them exist in two different frequency ranges.

**Frequency-Division Multiplexing**
simultaneous transmission of two or more signals on one carrier, each on its own separate frequency range, also called frequency multiplexing

## FM Stereo Generation

The block diagram in Figure 24 shows the method whereby the composite modulating signal is generated and applied to the FM modulator for subsequent transmission. The left and right channels are picked up by their respective microphones and individually preemphasized. They are then applied to a **matrix network** that inverts the right channel, giving a −R signal, and then combines (adds) L and R to provide an (L + R) signal and also combines L and −R to provide the (L − R) signal. The two outputs *are still* 30-Hz to 15-kHz audio signals at this point. The (L − R) signal and a 38-kHz carrier signal are then applied to a balanced modulator that suppresses the carrier but provides a double-sideband (DSB) signal at its output. The upper and lower sidebands extend from 30 Hz to 15 kHz above and below the suppressed 38-kHz carrier and therefore range from 23 kHz (38 kHz − 15 kHz) up to 53 kHz (38 kHz + 15 kHz). Thus, the (L − R) signal has been translated from audio up to a higher frequency to keep it separate from the 30-Hz to 15-kHz (L + R) signal. The (L + R) signal is given a slight delay so that both signals are applied to the FM modulator in time phase due to the slight delay encountered by the (L − R) signal in the balanced modulator. The 19-kHz master oscillator in Figure 24 is applied directly to the FM modulator and also doubled in frequency, to 38 kHz, for the balanced modulator carrier input.

**Matrix Network**
adds and/or subtracts and/or inverts electrical signals

Stereo FM is more prone to noise than are monophonic broadcasts. The (L − R) signal is weaker than the (L + R) signal, as shown in Figure 23. The (L − R) signal is also at a higher modulating frequency (23 to 53 kHz), and both of these effects cause

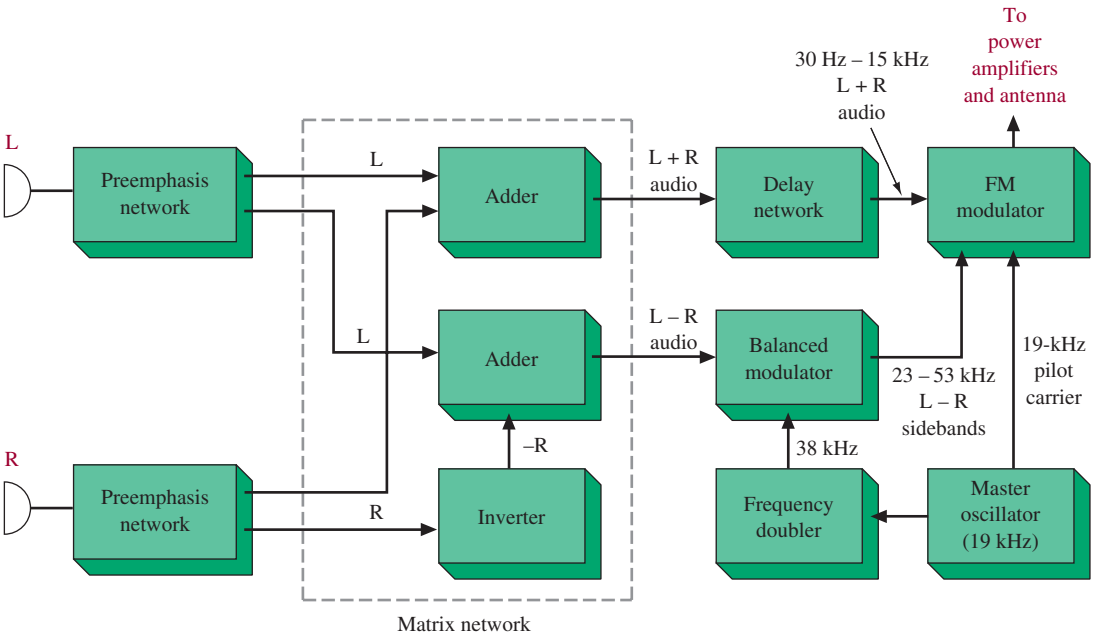


FIGURE 24 Stereo FM transmitter.

poorer noise performance. The net result to the receiver is an *S/N* of about 20 dB less than the monophonic signal. Because of this, some receivers have a mono/stereo switch so that a noisy (weak) stereo signal can be changed to monophonic for improved reception. A stereo signal received by a monophonic receiver is only about 1 dB worse (*S/N*) than an equivalent monophonic broadcast because of the presence of the 19-kHz pilot carrier.



## 9 FM Transmissions

FM is used in five major categories:

1. Noncommercial broadcast at 88 to 90 MHz
2. Commercial broadcast with 200-kHz channel bandwidths from 90 to 108 MHz
3. Television audio signals with 50-kHz channel bandwidths at 54 to 88 MHz, 174 to 216 MHz, and 470 to 806 MHz
4. Narrowband public service channels from 108 to 174 MHz and in excess of 806 MHz
5. Narrowband amateur radio channels at 29.6 MHz, 52 to 53 MHz, 144 to 147.99 MHz, 440 to 450 MHz, and in excess of 902 MHz

The output powers range from milliwatt levels for the amateurs up to 100 kW for broadcast FM. Note that FM is not used at frequencies below about 30 MHz because of the phase distortion introduced to FM signals by the earth's ionosphere at these frequencies. Frequencies above 30 MHz are transmitted line-of-sight and are not

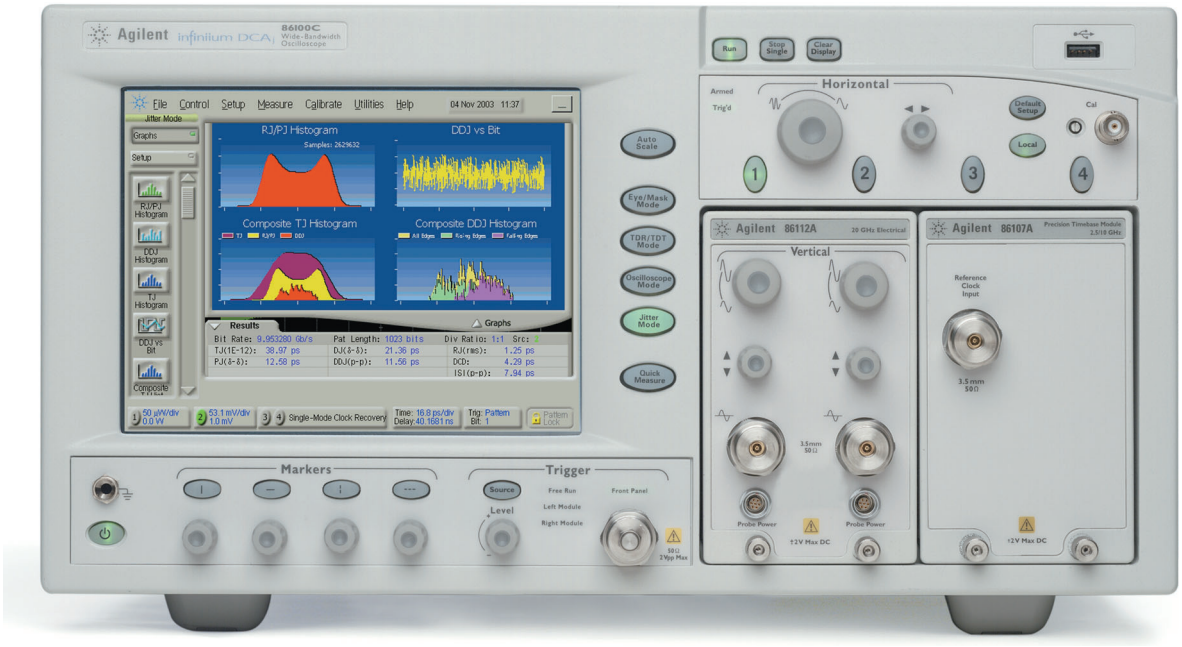


(a)




(b)

(a) The 86100C digital communications analyzer with jitter analysis offers breakthrough speed, accuracy, and affordability. (Courtesy of Agilent Technologies. Reprinted with permission.) (b) The MT8820B radio communications analyzer was designed to support the test needs of the manufacturing, R&D, and maintenance markets. (Courtesy of Anritsu Company.)

significantly affected by the ionosphere. The limited range (normally 70 to 80 mi) for FM transmission is due to the earth's curvature.

Another advantage that FM has over SSB and AM, other than superior noise performance, is the fact that *low-level modulation* can be used with subsequent highly efficient class C power amplifiers. Since the FM waveform does not vary in amplitude, the intelligence is not lost by class C power amplification as it is for AM and SSB. Recall that a class C amplifier tends to provide a constant output amplitude due to the *LC* tank circuit flywheel effect. Thus, there is no need for high-power audio amplifiers in an FM transmitter and, more important, all the power amplification takes place at about 90 percent efficiency (class C), as compared to a maximum of about 70 percent for linear power amplifiers.



## 10 TROUBLESHOOTING

The most likely types of FM radio a technician will be called to service are an automotive mobile, a fixed base station, or a handheld portable. Either the mobile or the fixed base station can have power outputs as high as 150 W. Some of these transmitters can be damaged if they are not operated into the proper load impedance, usually 50 Ω. Some contain automatic circuitry to shut the transmitter off if it is not connected to a proper load. Dummy loads are made for this purpose, so make sure you have one rated for sufficient power.

In an FM transmitter, an oscillator is typically controlled so that its frequency changes when an intelligence signal changes. This control is provided by a modulating circuit. Recall from Section 5 that there are several ways this modulator can work. In this section, we will learn some troubleshooting techniques for a reactance modulator circuit.

Frequency-modulated transmitters can be roughly divided into two categories. The first is wideband FM. More popular than AM broadcasting, it is the FM we listen to on our car radios and home stereos (it also produces the audio portion of a TV signal). The second type of FM transmitters is called narrowband FM. It is used in police and fire department radios as well as taxicabs and VHF boat radios and the popular handheld transceivers called handy talkies, or walkie-talkies. We'll also look at testing a wideband FM generator in this section.

After completing this section you should be able to

- Troubleshoot FM transmitter systems
- Describe the operation of the reactance modulator
- Locate the master oscillator section
- Locate the reactance circuit section
- Recognize the difference between no modulator output, low output, or oscillator output without FM
- Troubleshoot a stereo/SCA FM generator
- Measure an FM transmitter's carrier frequency and deviation

### FM TRANSMITTER SYSTEMS

1. NO RF OUTPUT In this case, one should first verify that the oscillator is running. Most of these transmitters multiply the oscillator by 12 or 18 to obtain the output frequency.

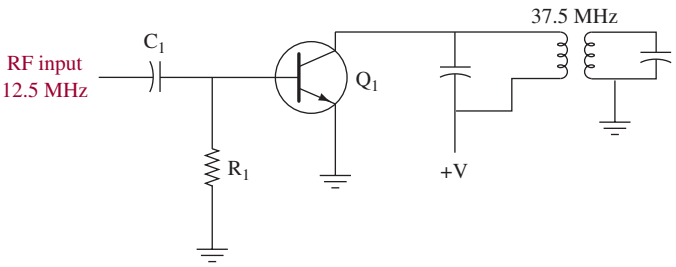


FIGURE 25 Multiplier stage.

The service manual will tell you what the multiplier is. It is best to have a spectrum analyzer, but a shortwave receiver will do.

Let's assume that the oscillator is running and move on to the first multiplier stage. Figure 25 shows a simplified schematic of a multiplier stage. If the base–emitter junction is good and there is sufficient input drive, you will find a negative voltage at the base of $Q_1$. This is because the RF input is rectified by the junction and the current flows through $R_1$. When the RF is rectified by the base–emitter junction, current pulses rich in harmonics are amplified and filtered by the tuned circuit in the collector of the transistor.

If a spectrum analyzer is available, the technician can verify that the stage is producing the proper multiple of the input frequency by loosely coupling the analyzer to the output coils. A two- or three-turn coil one-half inch in diameter connected to the analyzer will do.

Either the coils or the capacitors in the multiplier stage will be adjustable. You should be able to peak the output on the proper frequency with these adjustments. If not, check the capacitors and the inductors.

If you do not have a spectrum analyzer, simply measuring the bias voltage on the next stage may be sufficient. You can be reasonably sure that the multiplier is working if you can peak up the drive to the next stage with the adjustments. However, there is some possibility of tuning to the wrong harmonic. If the adjustments are all the way to one end, you may have done this or some component has failed. Another indication of improper tuning is that you will probably not be able to tune the next stage.

A typical transmitter will have three multiplier stages. At some point in the chain you will be able to find enough signal to run a frequency counter. Be careful; too much input to the counter will damage it. At the output of the transmitter, you can use a high-power attenuator.

2. Incorrect Frequency Most of these transmitters will have trimmer capacitors to adjust the frequency, while some will have inductors. If the oscillator is off frequency, check the voltage first, then the capacitors. Intermittent capacitors are the hardest to find. Try cooling the capacitor with an aerosol spray sold for this purpose.

3. Incorrect Deviation There are usually two adjustments here, one for microphone gain and one on a limiter. The limiter prevents the user from overmodulating the transmitter. When adjusting deviation, make sure the limiter is adjusted so that it doesn't affect the main adjustment. Refer to Figure 26.




FIGURE 26 Audio chain.

Mobile radios are usually set for a peak deviation of 5 kHz. A good service shop will have a deviation meter. If you don't have one, a fair job can be done by simply comparing a known good transmitter with the unit under test by listening to both with any receiver.

If a spectrum analyzer is available, recall Carson's rule and speak into the microphone while adjusting the bandwidth of the transmitted signal to about 16 kHz.

One can also use the zero carrier amplitude method shown in Figure 4. While viewing the transmitter output on the spectrum analyzer, apply a 2-kHz tone to the microphone input. Adjust the gain from zero up until the carrier is null and you have 5-kHz peak deviation.

## Reactance Modulator Circuit Operation

The reactance modulator is efficient and provides a large deviation. It is popular and used often in FM transmitters. Figure 27 illustrates a typical reactance modulator circuit. Refer to this figure throughout the following discussion. The circuit consists of the reactance circuit and the master oscillator. The reactance circuit operates on the master oscillator to cause its resonant frequency to shift up or shift down depending on the modulating signal being applied. The reactance circuit appears capacitive to the master oscillator. In this case, the reactance looks like a variable capacitor in the oscillator's tank circuit.

Transistor $Q_1$ makes up the reactance modulator circuit. Resistors $R_2$ and $R_3$ establish a voltage divider network that biases $Q_1$. Resistor $R_4$ furnishes emitter feedback to thermally stabilize $Q_1$. Capacitor $C_3$ is a bypass component that prevents ac input signal degeneration. Capacitor $C_1$ interacts with transistor $Q_1$'s interelectrode capacitance to cause a varying capacitive reactance directly influenced by the input modulating signal.

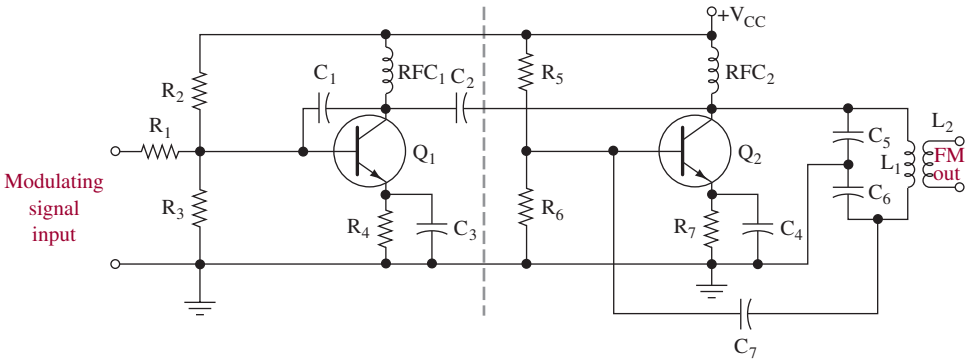


FIGURE 27 Reactance modulator.

The master oscillator is a Colpitts oscillator built around transistor $Q_2$. Coil $L_1$, capacitor $C_5$, and capacitor $C_6$ make up the resonant tank circuit. Capacitor $C_7$ provides the required regenerative feedback to cause the circuit to oscillate. $Q_1$ and $Q_2$ are impedance coupled, and capacitor $C_2$ effectively couples the changes at $Q_1$'s collector to the tank circuit of transistor $Q_2$ while blocking dc voltages.

When a modulating signal is applied to the base of transistor $Q_1$ via resistor $R_1$, the reactance of the transistor changes in relation to that signal. If the modulating voltage goes up, the capacitance of $Q_1$ goes down, and if the modulating voltage goes down, the reactance of $Q_1$ goes up. This change in reactance is felt on $Q_1$'s collector and also at the tank circuit of the Colpitts oscillator transistor $Q_2$. As capacitive reactance at $Q_1$ goes up, the resonant frequency of the master oscillator, $Q_2$, decreases. Conversely, if $Q_1$'s capacitive reactance goes down, the master oscillator resonant frequency increases.

## Troubleshooting the Reactance Modulator

The FM output signal from coil $L_2$ can be lost due to open bias resistors, open RF chokes $RFC_1$ and $RFC_2$, or an open winding at coil $L_1$. In addition, a leaky coupling capacitor $C_2$ may shift the collector voltage of $Q_2$ of the master oscillator, causing a low FM output signal to be present at coil $L_2$. Low collector voltages and weak transistors may produce a low FM signal output condition, as well as changes in bias resistors $R_2$ and $R_3$ in transistor $Q_1$'s circuit and resistors $R_5$ and $R_6$ in $Q_2$'s circuit. Changes in the emitter resistors of both transistor circuits will lessen the FM output and possibly shut the modulator down.

The master oscillator may operate without being influenced by the reactance circuit. The oscillator output signal at $L_2$ would not be FM. This situation could occur if the modulating signal were missing from the base of transistor $Q_1$. An open $R_1$ would block the modulating signal from getting to the base of $Q_1$. Without the modulating signal present, $Q_1$'s reactance would not change. A leaky or shorted $C_1$ could also kill the reactance response of $Q_1$. Transistor $Q_1$ may still be operating perfectly but the reactance changes might not be passed to $Q_2$'s tank circuit due to an open $C_2$.

Table 3 is a symptom guide to help you troubleshoot the reactance modulator circuit.

**Table 3**

| Symptom | Problem | Probable Cause |
|---|---|---|
| No signal out from $L_2$ | No FM modulator output | Open bias resistors in $Q_1$ and $Q_2$ circuits; open $RFC_1$ or $RFC_2$; $C_2$ open or leaky; feedback capacitor $C_7$ open |
| No FM output at $L_2$, master oscillator output only | No FM modulation taking place | $Q_1$ not functioning, check $C_1$, $RFC_1$, and $R_4$; resistor $R_1$ may be open |
| Amplitude of FM output low | Low modulator output | Changes in bias resistor values, check $R_2$, $R_3$, $R_5$, and $R_6$; change in emitter resistors, check $R_4$ and $R_7$; $Q_2$'s gain has decreased |

Check the resistors with your DMM for proper values. Resistors in the reactance modulator circuit will be precision types with close tolerances. For low FM signal outputs, check capacitors $C_1$, $C_2$, $C_5$, $C_6$, and $C_7$ with a capacitor checker.

Any one of these capacitors could cause low output. If any of these capacitors open or become leaky, the FM output may cease altogether. Check coils for open windings using the DMM's continuity function. Look for cold solder joints by observing a dull appearance of the solder connection. The DMM will give a high resistance indication for a cold solder joint.

## The Spectrum of a Wideband FM Signal

Figure 28 illustrates the frequency spectrum of the modulating signal for a standard wideband FM stereo broadcast system. The signal has two major parts. The first part extends from the carrier up to 53 kHz. It consists of the three components making up the stereo (stereophonic) portion of the signal: the left-plus-right audio channel extending from 0.05 to 15 kHz, the pilot carrier at 19 kHz, and the left-minus-right audio channel from 23 to 53 kHz.

The second part of our FM modulating signal spectrum is the SCA (Subsidiary Communications Authorization) signal extending from 60 to 74 kHz above the carrier. Because the station's voice ID (which by law must be broadcast at regular intervals) is carried on the stereo channel, the SCA channel can legally transmit, for example, weather announcements or perhaps only music. That music, however, is at such a high frequency (note it is centered around 67 kHz) it cannot be heard on regular radios. Instead, the radio station leases special equipment that drops the frequencies to normal hearing range to supply background music to grocery stores and dentists' offices. Figure 29 shows the block diagram of a system that generates a stereo/SCA FM signal.

Troubleshooting the stereo/SCA generator is best done with a spectrum analyzer connected as shown in Figure 30. Note first the (L + R) signals from 0.05 to 15 kHz in Figure 28. They will be present whether the station is transmitting monophonic or stereo. The 19-kHz pilot carrier and (L − R) channels, however, are only present during stereo broadcasts. Should the oscillator generating the 19-kHz carrier fail, both that signal as well as the (L − R) channel from 23 to 53 kHz will disappear from the analyzer display. The oscillator will probably be contained within an IC that develops the entire stereo signal. If so, the chip must be replaced

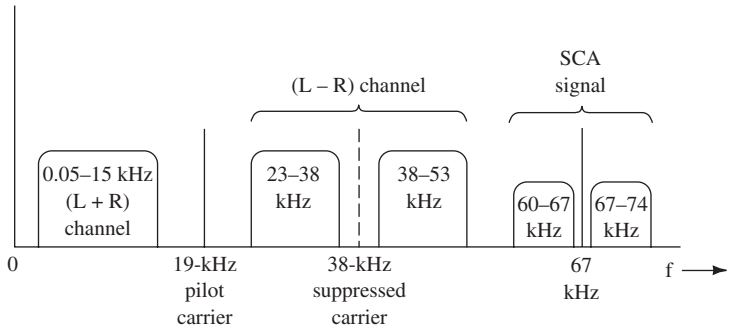


FIGURE 28 Spectrum of a wideband FM modulating signal.

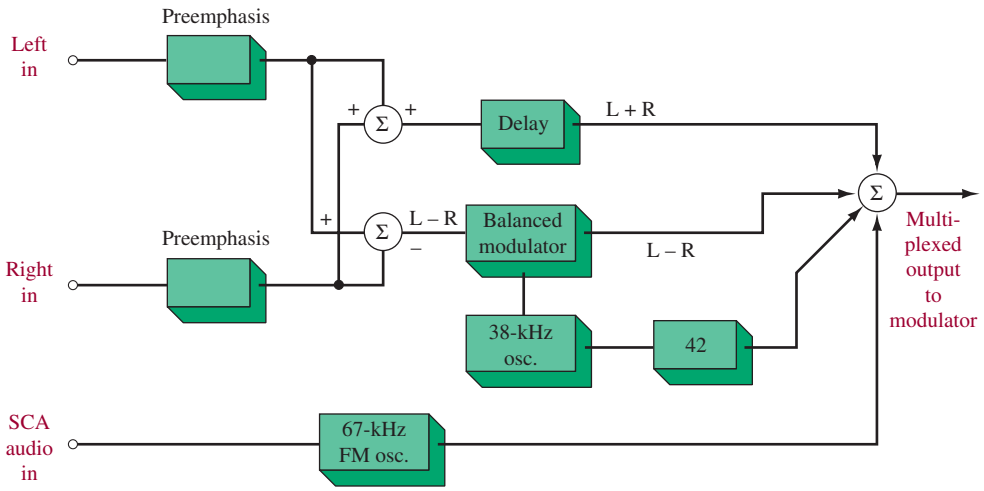


FIGURE 29 Generating a stereo/SCA FM modulating signal.

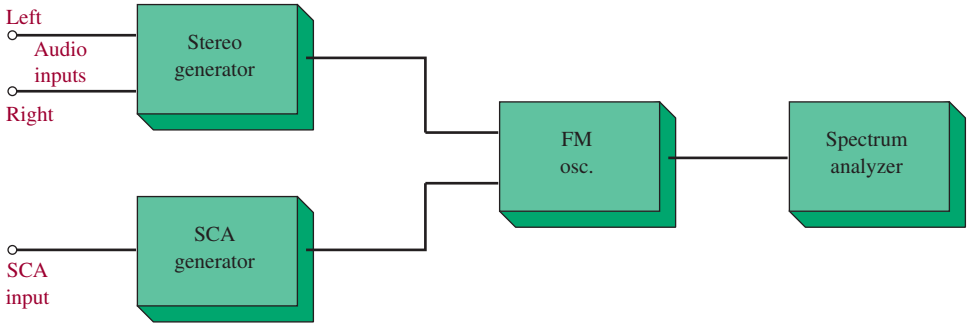


FIGURE 30 Troubleshooting the stereo/SCA generator.

(assuming you've determined that $V_{CC}$ and any other required inputs are present). Older units, however, might have a circuit constructed of separate components. In that case, use your regular troubleshooting techniques of checking for proper voltages, resistances, etc., to locate the problem.

The (L − R) channel is a double-sideband suppressed carrier (DSBSC) signal generated by a balanced modulator. The carrier it suppresses is the second harmonic (two times or 38-kHz) of the 19-kHz pilot carrier.

## Wideband FM Transmitters' Frequency and Deviation Test

Wideband FM transmissions are defined as those having a modulation index greater than 1. By FCC regulations, these signals are allowed a deviation no greater than ± 75 kHz. Because they are modulated by audio signals from 30 Hz to 15 kHz, calculations tell us the modulation index can range from 5 to 2500.

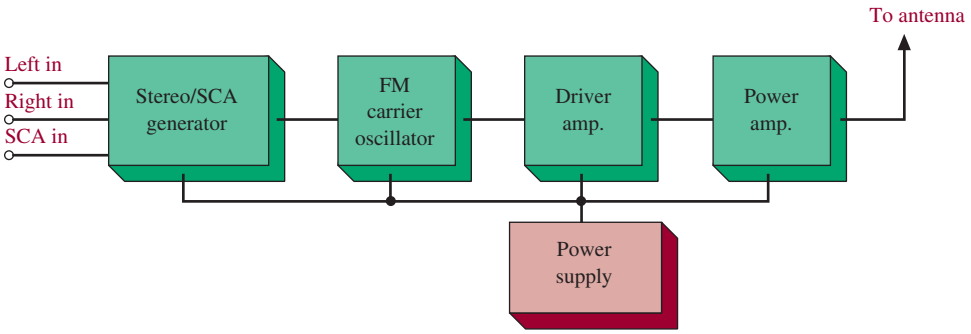


FIGURE 31 The wideband FM transmitter.

We will discuss two important tests that are regularly made on FM transmitters. These are carrier frequency and deviation tests.

The block diagram of a wideband FM transmitter is shown in Figure 31. Note the input to the carrier oscillator. It is the output of the stereo/SCA generator discussed above. We say that the stereo/SCA generator frequency modulates the transmitter's carrier oscillator.

The FCC requires an FM broadcast station to hold its carrier frequency accurate to within ±2000 Hz. To achieve this stability, the transmitter employs an automatic frequency control (AFC) circuit. A reference crystal oscillator drives the AFC unit. Its frequency is measured very accurately. To hold this frequency stable against temperature changes, the entire unit is contained in a thermostatically controlled oven.

The AFC control compares the carrier oscillator frequency against that of the reference oscillator. Should there be an error between the two (in other words, should the carrier oscillator change frequency or drift), the AFC circuitry shifts the carrier frequency to return the error to zero.

The test setup of Figure 32 is used to measure a station's carrier frequency. Note the dummy load. It dissipates the energy developed by the transmitter as

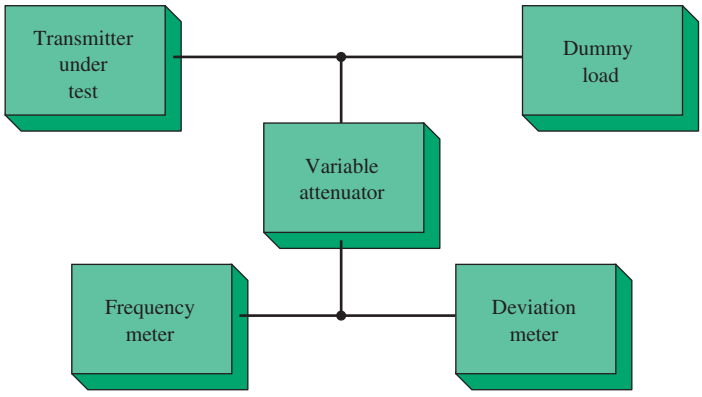


FIGURE 32 Measuring the FM transmitter's carrier frequency and deviation.

heat so no signal goes out over the air during testing and troubleshooting. The input impedance of the dummy load must match (be the same as) the impedance of the transmission line carrying the transmitter's output signal to the antenna.

The frequency meter or counter used to measure carrier frequency in Figure 32 must be accurate, especially if the readings are being taken for FCC certification. Should the frequency be out of specs, check the reference oscillator for proper output with the same frequency meter. Look for problems in the AFC circuitry. The modulating signal should be turned off before you make any carrier measurements.

Carrier deviation can also be measured using the deviation meter in the circuit of Figure 32. As stated above, deviation must not exceed ±75 kHz for wideband FM broadcasting transmitters.



## 11 TROUBLESHOOTING WITH ELECTRONICS WORKBENCH™ MULTISIM

The concept of generating a frequency-modulated signal was introduced in this chapter. This exercise has been developed to help you better understand the concept of generating and analyzing a frequency modulated signal. To begin this exercise, open **Fig5-33,** which can be found at www.pearsoned.com/electronics. This circuit, shown in Figure 33, contains a voltage-controlled oscillator (VCO) that is being driven by a 1-V, 10-kHz triangle wave. The triangle wave is being generated by the function generator. Double-click on the function generator to see the settings. The function

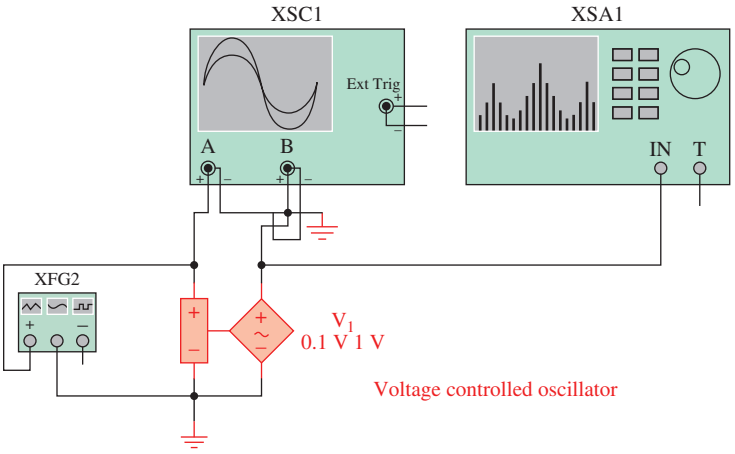


FIGURE 33 A frequency-modulation circuit using a voltage-controlled oscillator, as implemented in an Electronics Workbench™ Multisim circuit.

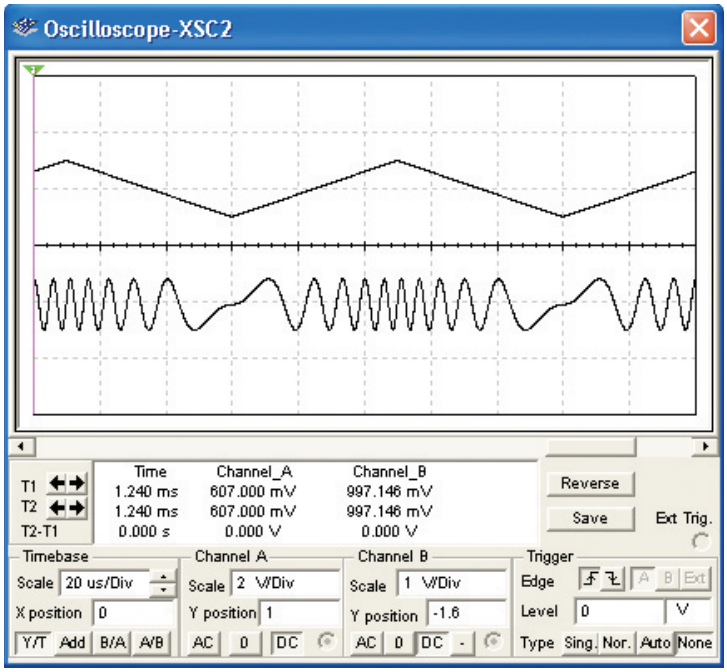


FIGURE 34 The oscilloscope display of the 10-kHz triangle wave and the output of the VCO.

generator can produce a sinusoid, triangle, or square wave. The frequency, duty cycle, and offset voltage are adjustable.

Double-click on the VCO to check its settings. The control and frequency arrays are used to specify the ranges for the VCO. In this example, an input voltage of 0 V produces a 100-kHz sinusoid, whereas a 1-V input produces a 200-kHz sinusoid.

The output of the VCO, as viewed with an oscilloscope, is provided in Figure 34. Channel A (top) is the 10-kHz triangle waveform and channel B (bottom) is the VCO output. Notice that as the voltage increases, the VCO frequency increases. Experiment with the circuit and see how the VCO output is affected by inputting a square wave. A square-wave input produces a frequency shift keying (FSK) output.

Close **Fig5-33** and open the **FigE5-1** file at www.pearsoned.com/electronics. The VCO has been replaced with an FM source. Double-click on the FM source to see the settings. The carrier frequency is 150 kHz, the modulation index is 5, and the signal frequency is 10 kHz. Start the simulation and observe the display on the spectrum analyzer. You should see a picture similar to Figure 35. Notice the spectral width of the signal. Recall from Section 3 that the bandwidth of an FM signal can be estimated by Carson's rule.

For this example, the input frequency is 10 kHz and the modulation index is 5. The estimated BW is 2(50 kHz + 10 kHz) = 120 kHz. This is a noisy signal, but a quick estimate shows that the 3-dB bandwidth is approximately 120 kHz, which agrees with the estimate using Carson's rule.

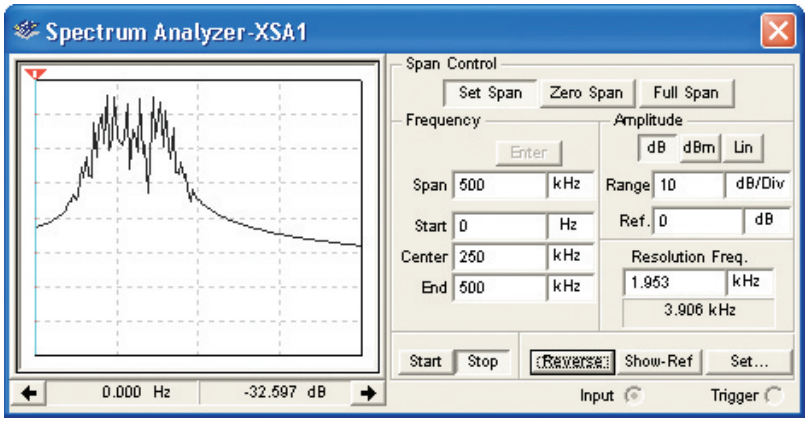


FIGURE 35 The output of the voltage-controlled oscillator as viewed with a spectrum analyzer.

## Electronics Workbench™ Exercises

1. Open the file **FigE5-2** at www.pearsoned.com/electronics. Use Carson's rule to estimate the bandwidth of the FM signal and then compare your result with the measurement obtained with the spectrum analyzer. You will need to double-click on the FM source to view the settings. (~120 kHz)
2. Open the file **FigE5-3** at www.pearsoned.com/electronics. Use Carson's rule to estimate the bandwidth of the FM signal and then compare your result with the measurement obtained with the spectrum analyzer. You will need to double-click on the FM source to view the settings. (~53.4 kHz)



## Summary

In this chapter we studied the concept of frequency modulation (FM) and learned the basics of FM transmitters. The major topics you should now understand include:

- the definitions of *angle, frequency,* and *phase modulation*
- the generation of FM by using a capacitor microphone and the effects of changes in voice amplitude and frequency on the FM signal
- the analysis of FM using modulation index and Bessel functions
- the determination of FM deviation using the zero-carrier condition
- the analysis of noise suppression by limiter circuits and by using phasors and the signal-to-noise ratio (*S/N*)
- the analysis of direct generation FM circuits, including varactor diodes, the reactance modulator, the LIC VCO, and the Crosby modulator
- the operation of an indirect FM system using the Armstrong modulator
- the generation of FM using a phase-locked loop (PLL)
- the changes made to a standard FM transmitter to enable broadcast stereo operation
- the advantage of FM versus SSB or AM



# Questions and Problems

## Section 1

1. Define *angle modulation* and list its subcategories.
*2. What is the difference between frequency and phase modulation?
3. Even though PM is not actually transmitted, provide two reasons that make it important in the study of FM.
4. A radio transmission is classified as $3A1_i$. Describe this signal as fully as possible.

## Section 2

5. Explain how a condenser microphone can be used very easily to generate FM.
6. Define *deviation constant.*
7. A 50-mV sinusoid, at a frequency of 1 kHz, is applied to a capacitor microphone FM generator. If the deviation constant for the capacitor microphone FM generator is 500 Hz/20 mV, determine:
   (a) The total frequency deviation. ($\pm$1.25 kHz)
   (b) The rate at which the carrier frequency is being deviated. (1 kHz)
8. Explain how the intelligence signal modulates the carrier.
9. In an FM transmitter, the output is changing between 90.001 and 89.999 MHz 1000 times a second. The intelligence signal amplitude is 3 V. Determine the carrier frequency and intelligence signal frequency. If the output deviation changes to between 90.0015 and 89.9985 MHz, calculate the intelligence signal amplitude. (90 MHz, 1 kHz, 4.5 V)
*10. What determines the rate of frequency swing for an FM broadcast transmitter?
11. Without knowledge of Section 3 and using Figure 1, write an equation that expresses the output frequency, $f$, of the FM generator. *Hint:* If there is no input into the microphone, then $f = f_c$, where $f_c$ is the oscillator's output frequency.

## Section 3

12. Define *modulation index* ($m_f$) as applied to an FM system.
*13. What characteristic(s) of an audio tone determines the percentage of modulation of an FM broadcast transmitter?
14. Explain what happens to the carrier in FM as $m_f$ goes from 0 up to 15.
15. Calculate the bandwidth of an FM system (using Table 2) when the maximum deviation ($\delta$) is 15 kHz and $f_i$ = 3 kHz. Repeat for $f_i$ = 2.5 and 5 kHz. (48 kHz, 45 kHz, 60 kHz)
16. Explain the purpose of the *guard bands* for broadcast FM. How wide is an FM broadcast channel?
*17. What frequency swing is defined as 100 percent modulation for an FM broadcast station?

---

*An asterisk preceding a number indicates a question that has been provided by the FCC as a study aid for licensing examinations.



*18. What is the meaning of the term *center frequency* in reference to FM broadcasting?
*19. What is the meaning of the term *frequency swing* in reference to FM broadcast stations?
*20. What is the frequency swing of an FM broadcast transmitter when modulated 60 percent? (±45 kHz)
*21. An FM broadcast transmitter is modulated 40 percent by a 5-kHz test tone. When the percentage of modulation is doubled, what is the frequency swing of the transmitter?
*22. An FM broadcast transmitter is modulated 50 percent by a 7-kHz test tone. When the frequency of the test tone is changed to 5 kHz and the percentage of modulation is unchanged, what is the transmitter frequency swing?
*23. If the output current of an FM broadcast transmitter is 8.5 A without modulation, what is the output current when the modulation is 90 percent?
24. An FM transmitter delivers, to a 75-Ω antenna, a signal of $v = 1000 \sin(10^9 t + 4 \sin 10^4 t)$. Calculate the carrier and intelligence frequencies, power, modulation index, deviation, and bandwidth. (159 MHz, 1.59 kHz, 6.67 kW, 4, 6.37 kHz, ~ 16 kHz)
25. Assuming that the 9.892-kW result of Example 7 is exactly correct, determine the total power in the $J_2$ sidebands and higher. (171 W)
26. Determine the deviation ratio for an FM system that has a maximum possible deviation of 5 kHz and the maximum input frequency is 3 kHz. Is this narrow- or wideband FM? (1.67, wideband)

## Section 4

*27. What types of radio receivers do not respond to static interference?
*28. What is the purpose of a limiter stage in an FM broadcast receiver?
29. Explain why the limiter does *not* eliminate all noise effects in an FM system.
30. Calculate the amount of frequency deviation caused by a limited noise spike that still causes an undesired phase shift of 35° when $f_i$ is 5 kHz. (3.05 kHz)
31. In a broadcast FM system, the input *S/N* = 4. Calculate the worst-case *S/N* at the output if the receiver's internal noise effect is negligible. (19.8 : 1)
32. Explain why narrowband FM systems have poorer noise performance than wideband systems.
33. Explain the *capture effect* in FM, and include the link between it and FM's inherent noise reduction capability.
*34. Why is narrowband FM rather than wideband FM used in radio communications systems?
*35. What is the purpose of preemphasis in an FM broadcast transmitter? Of deemphasis in an FM receiver? Draw a circuit diagram of a method of obtaining preemphasis.
*36. Discuss the following for frequency modulation systems:
    (a) The production of sidebands.
    (b) The relationship between the number of sidebands and the modulating frequency.
    (c) The relationship between the number of sidebands and the amplitude of the modulating voltage.
    (d) The relationship between percentage modulation and the number of sidebands.

(e) The relationship between modulation index or deviation ratio and the number of sidebands.
(f) The relationship between the spacing of the sidebands and the modulating frequency.
(g) The relationship between the number of sidebands and the bandwidth of emissions.
(h) The criteria for determining the bandwidth of emission.
(i) Reasons for preemphasis.

## Section 5

37. Draw a schematic diagram of a varactor diode FM generator and explain its operation.
*38. Draw a schematic diagram of a frequency-modulated oscillator using a reactance modulator. Explain its principle of operation.
39. Using the specifications in Figure 14, draw a schematic of an FM generator using the SE/NE 566 LIC function generator VCO. The center frequency is to be 500 kHz, and the output is to be a sine wave. Show all component values. How much center frequency drift can be expected from a temperature rise of 50°C?
40. Explain the principles of a Crosby-type modulator.
*41. How is good stability of a reactance modulator achieved?
*42. If an FM transmitter employs one doubler, one tripler, and one quadrupler, what is the carrier frequency swing when the oscillator frequency swing is 2 kHz? (48 kHz)
43. Draw a block diagram of a broadcast-band Crosby-type FM transmitter operating at 100 MHz, and label all frequencies in the diagram.
44. Explain the function of a discriminator.

## Section 6

*45. Draw a block diagram of an Armstrong-type FM broadcast transmitter complete from the microphone input to the antenna output. State the purpose of each stage, and explain briefly the overall operation of the transmitter.
46. Explain the difference in the amount of deviation when passing an FM signal through a mixer as compared to a multiplier.
47. What type of circuits are used to increase a narrowband to a wideband?

## Section 7

48. Explain the operation of the PLL FM transmitter shown in Figure 20.

## Section 8

49. Draw a block diagram of a stereo multiplex FM broadcast transmitter complete from the microphone inputs to the antenna output. State the purpose of each stage, and explain briefly the overall operation of the transmitter.
50. Explain how stereo FM can effectively transmit twice the information of a standard FM broadcast while still using the same bandwidth. How is the *S/N* at the receiver affected by a stereo transmission as opposed to monophonic?



51. Define *frequency-division multiplexing.*
52. Describe the type of modulation used in the L − R signal of Figure 23.
53. Explain the function of a matrix network as it relates to the generation of an FM stereo signal.
54. What difference in noise performance exists between FM stereo and mono broadcasts? Explain what might be done if an FM stereo signal is experiencing noise problems at the receiver.

## Section 9

*55. What are the merits of an FM communications system compared to an AM system?
*56. Why is FM undesirable in the standard AM broadcast band?
57. What advantage does FM have over AM and SSB?

## Section 10

58. What is the function of a multiplier stage in an FM transmission system? Explain how to troubleshoot a multiplier stage.
59. Briefly explain the function/operation of the reactance modulator in Figure 27.
60. Resistor R5 in Figure 27 has changed value. Describe the effect on this circuit and how to troubleshoot this situation.
61. What is the SCA signal? Give a technique to troubleshoot a transmitter that is not properly transmitting the SCA signal.
62. Describe the procedure to check an FM transmitter carrier frequency.
63. Describe the FM output if R5 was shorted in Figure 27.
64. Explain what happens if R1 was shorted in Figure 27.
65. In Figure 29, explain what the output would be if the 38-kHz subcarrier were gone.
66. If the balanced modulator in Figure 29 failed, describe the output.

## Questions for Critical Thinking

67. Analyze the effect of an intelligence signal's amplitude and frequency when it frequency-modulates a carrier.
68. Contrast the modulation indexes for PM verses FM. Given this difference, could you modify a modulating signal so that allowing it to phase-modulate a carrier would result in FM? Explain your answer.
69. Does the maximum deviation directly determine the bandwidth of an FM system? If not, explain how bandwidth and deviation are related.
70. An FM transmitter puts out 1 kW of power. When $m_f = 2$, analyze the distribution of power in the carrier and all significant sidebands. Use Bessel functions to verify that the sum of these powers is 1 kW.
71. Why is the FCC concerned if an FM broadcast station overmodulates (deviation exceeds ± 75 kHz)?

# FREQUENCY MODULATION RECEPTION

From *Modern Electronic Communication*, Ninth Edition, Jeffrey S. Beasley, Gary M. Miller. Copyright © 2008 by Pearson Education, Inc. Published by Prentice Hall. All rights reserved.

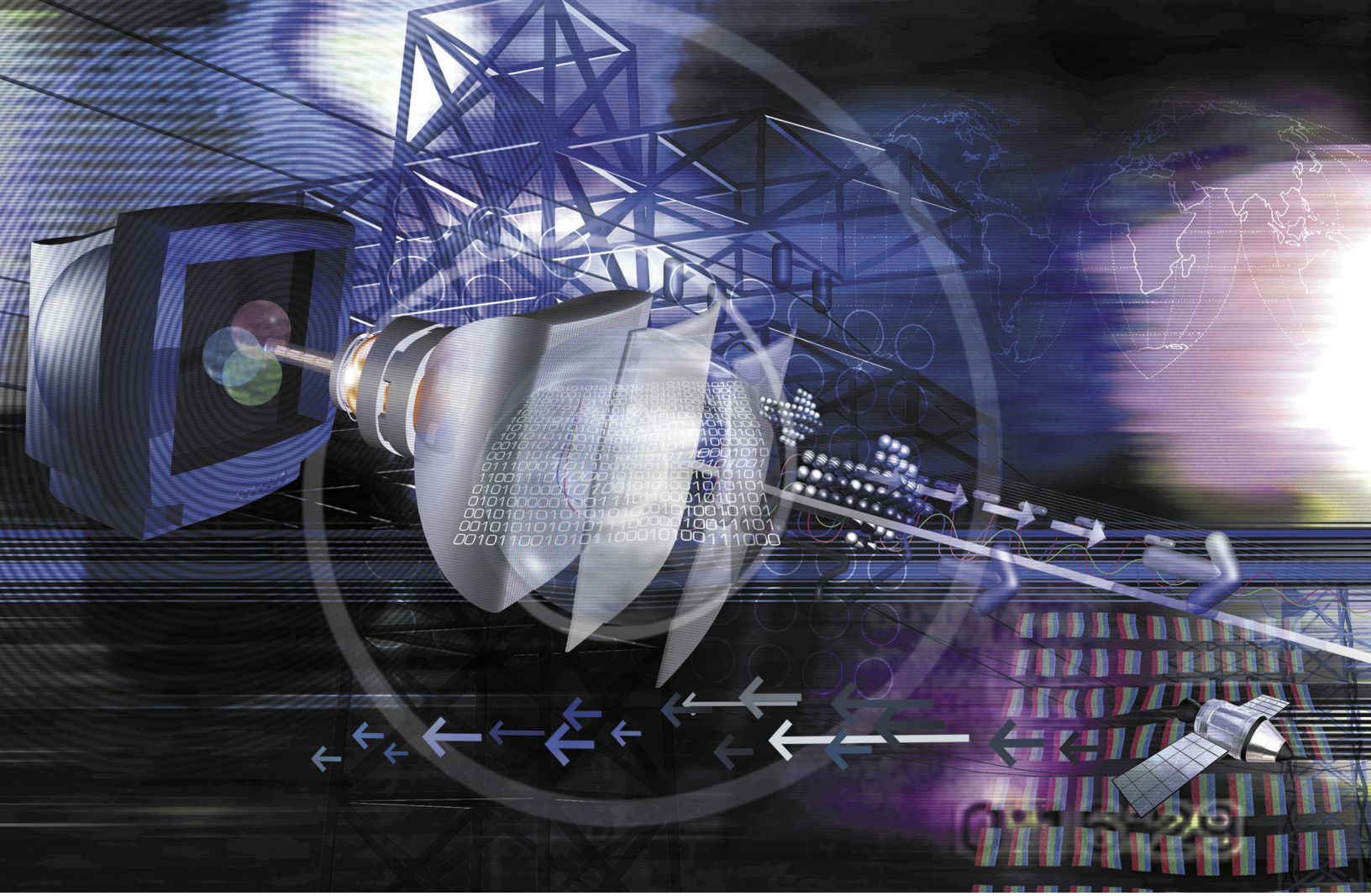

## Chapter Outline

1 Block Diagram
2 RF Amplifiers
3 Limiters
4 Discriminators
5 Phase-Locked Loop
6 Stereo Demodulation
7 FM Receivers
8 Troubleshooting
9 Troubleshooting with Electronics Workbench™ Multisim

## Objectives

- Describe the operation of an FM receiving system and highlight the difference compared to AM
- Sketch a slope detector schematic and explain how it can provide the required response to the modulating signal amplitude and frequency
- Provide various techniques and related circuits used in FM discriminators
- Explain the operation of the PLL and describe how it can be utilized as an FM discriminator
- Provide the block diagram of a complete stereo broadcast band receiver and explain its operation
- Analyze the operation of an LIC used as a stereo decoder
- Analyze and understand a complete FM receiver schematic

# FREQUENCY MODULATION RECEPTION

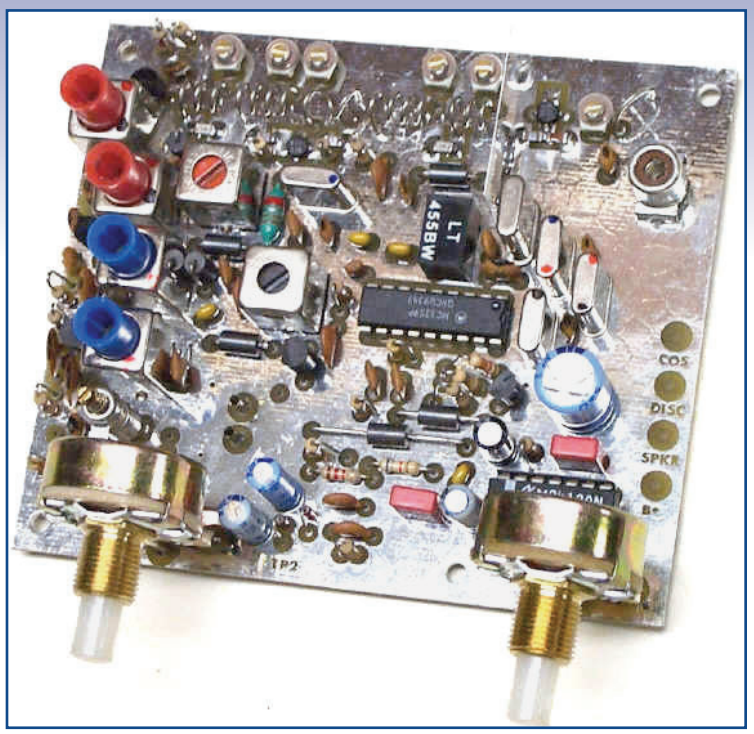


An example of a frequency modulation electronic module. (Courtesy of Hamtronics, Inc.)

## Key Terms

discriminator
automatic frequency control
local oscillator
reradiation
cross-modulation
intermodulation distortion
dynamic range
sensitivity
quieting voltage
threshold voltage
limiting knee voltage
quadrature
phase-locked loop
phase comparator
phase detector
capture state
locked
free-running frequency
loop gain
hold-in range
subsidiary communication authorization



# 1 Block Diagram

The basic FM receiver uses the superheterodyne principle. In block diagram form, it has many similarities to the receivers you may have covered in previous chapters. In Figure 1, the only apparent differences are the use of the word *discriminator* in place of *detector,* the addition of a deemphasis network, and the fact that AGC may or may not be used as indicated by the dashed lines.

**Discriminator**
stage in an FM receiver that creates an output level that varies as a function of its input frequency; recovers the intelligence signal

The **discriminator** extracts the intelligence from the high-frequency carrier and can also be called the detector, as in AM receivers. By definition, however, a discriminator is a device in which amplitude variations are derived in response to frequency or phase variations, and it is the preferred term for describing an FM demodulator.

The deemphasis network following demodulation is required to bring the high-frequency intelligence back to the proper amplitude relationship with the lower frequencies. Recall that the high frequencies were preemphasized at the transmitter to provide them with greater noise immunity.

The fact that AGC is optional in an FM receiver may be surprising to you. From your understanding of AM receivers, you know that AGC is essential to their satisfactory operation. However, the use of limiters in FM receivers essentially provides an AGC function, as will be explained in Section 3. Many older FM receivers also included an **automatic frequency control** (AFC) function. This is a circuit that provides a slight automatic control over the local oscillator circuit. It compensates for drift in LO frequency that would otherwise cause a station to become detuned. It was necessary because it had not yet been figured out how to make an economical *LC* oscillator at 100 MHz with sufficient frequency stability. The AFC system is not needed in new designs.

**Automatic Frequency Control**
negative feedback control system in FM receivers used to achieve stability of the local oscillator

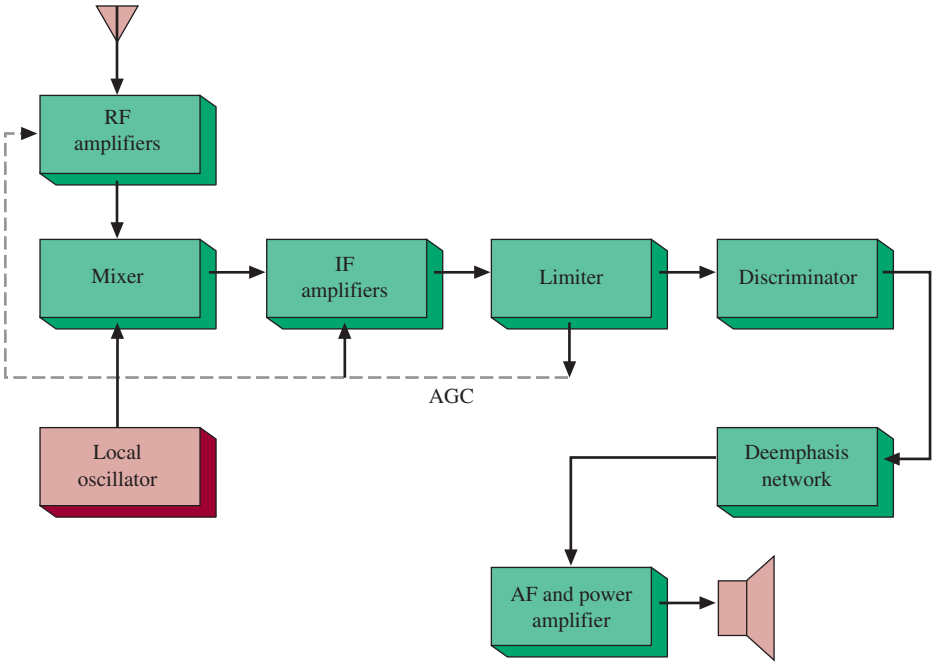


FIGURE 1 FM receiver block diagram.

The mixer, local oscillator, and IF amplifiers are basically similar to those discussed for AM receivers and do not require further elaboration. It should be noted that higher frequencies are usually involved, however, because of the fact that FM systems generally function at higher frequencies. The universally standard IF frequency for FM is 10.7 MHz, as opposed to 455 kHz for AM. Because of significant differences in all the other portions of the block diagram shown in Figure 1, they are discussed in the following sections.



## 2 RF Amplifiers

Broadcast AM receivers normally operate quite satisfactorily without any RF amplifier. This is rarely the case with FM receivers, however, except for frequencies in excess of 1000 MHz (1 GHz), when it becomes preferable to omit it. The essence of the problem is that FM receivers can function with weaker received signals than AM or SSB receivers because of their inherent noise reduction capability. This means that FM receivers can function with a lower sensitivity, and are called upon to deal with input signals of 1 $\mu$V or less as compared with perhaps a 30-$\mu$V minimum input for AM. If a 1-$\mu$V signal is fed directly into a mixer, the inherently high noise factor of an active mixer stage destroys the intelligibility of the 1-$\mu$V signal. Therefore, it is necessary to amplify the 1-$\mu$V level in an RF stage to get the signal up to at least 10 to 20 $\mu$V before mixing occurs. The FM system can tolerate 1 $\mu$V of noise from a mixer on a 20-$\mu$V signal but obviously cannot cope with 1 $\mu$V of noise with a 1-$\mu$V signal.

This reasoning also explains the abandonment of RF stages for the ever-increasing FM systems at the 1-GHz-and-above region. At these frequencies, transistor noise is increasing while gain is decreasing. The frequency is reached where it is advantageous to feed the incoming FM signal directly into a diode mixer to step it down immediately to a lower frequency for subsequent amplification. Diode (passive) mixers are less noisy than active mixers.

Of course, the use of an RF amplifier reduces the image frequency problem. Another benefit is the reduction in **local oscillator reradiation** effects. Without an RF amp, the local oscillator signal can get coupled back more easily into the receiving antenna and transmit interference.

**Local Oscillator Reradiation**
undesired radiation of the local oscillator signal through a receiver's antenna

### FET RF Amplifiers

Almost all RF amps used in quality FM receivers utilize FETs as the active element. You may think that this is done because of their high input impedance, but this is *not* the reason. In fact, their input impedance at the high frequency of FM signals is greatly reduced because of their input capacitance. The fact that FETs do not offer any significant impedance advantage over other devices at high frequencies is not a deterrent, however, because the impedance that an RF stage works from (the antenna) is only several hundred ohms or less anyway.

The major advantage is that FETs have an input/output square-law relationship while vacuum tubes have a $\frac{3}{2}$-power relationship and BJTs have a diode-type exponential characteristic. A square-law device has an output signal at the input frequency and a smaller distortion component at two times the input frequency, whereas the other devices mentioned have many more distortion components, with some of them occurring at frequencies close to the desired signal. The use

of an FET at the critical small signal level in a receiver means that the device distortion components are filtered out easily by its tuned circuits because the closest distortion component is two times the frequency of the desired signal. This becomes an extreme factor when you tune to a weak station that has a very strong adjacent signal. If the high-level adjacent signal gets through the input tuned circuit, even though greatly attenuated, it would probably generate distortion components at the desired signal frequency by a nonsquare-law device, and the result is audible noise in the speaker output. This form of receiver noise is called **cross-modulation.** This is similar to **intermodulation distortion,** which is characterized by the mixing of *two* undesired signals, resulting in an output component that is equal to the desired signal's frequency. The possibility of intermodulation distortion is also greatly minimized by the use of FET RF amplifiers.

**Cross-Modulation**
form of distortion resulting in overdriven mixer stages

**Intermodulation Distortion**
undesired mixing of two signals in a receiver resulting in an output frequency component equal to that of the desired signal

## MOSFET RF Amplifiers

A dual-gate, common-source MOSFET RF amplifier is shown in Figure 2. The use of a dual-gate device allows a convenient isolated input for an AGC level to control device gain. The MOSFETs also offer the advantage of increased **dynamic range** over JFETs. That is, a wider range of input signal can be tolerated by the MOSFET while still offering the desired square-law input/output relationship. A similar arrangement is often utilized in mixers because the extra gate allows for a convenient injection point for the local oscillator signal. The accompanying chart in Figure 2 provides component values for operation at 100-MHz and 400-MHz center frequencies. The antenna input signal is coupled into

**Dynamic Range**
decibel difference between the largest tolerable receiver input level and its sensitivity

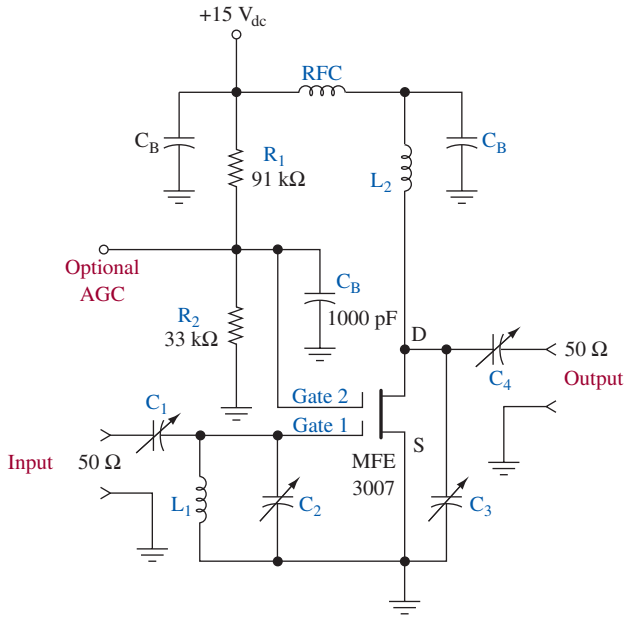


VHF Amplifier
The following component values are used for the different frequencies:

| Component Values | 100 MHz | 400 MHz |
|---|---|---|
| $C_1$ | 8.4 pF | 4.5 pF |
| $C_2$ | 2.5 pF | 1.5 pF |
| $C_3$ | 1.9 pF | 2.8 pF |
| $C_4$ | 4.2 pF | 1.2 pF |
| $L_1$ | 150 nH | 16 nH |
| $L_2$ | 280 nH | 22 nH |
| $C_B$ | 1000 pF | 250 pF |

FIGURE 2 MOSFET RF amplifier. (Courtesy of Motorola Semiconductor Products, Inc.)

gate 1 via the coupling/tuning network comprised of $C_1$, $L_1$, and $C_2$. The output signal is taken at the drain, which is coupled to the next stage by the $L_2$–$C_3$–$C_4$ combination. The bypass capacitor $C_B$ next to $L_2$ and the radio-frequency choke (RFC) ensure that the signal frequency is not applied to the dc power supply. The RFC acts as an open to the signal while appearing as a short to dc, and the bypass capacitor acts in the inverse fashion. These precautions are necessary to RF frequencies because while power supply impedance is very low at low frequencies and dc, it looks like a high impedance to RF and can cause appreciable signal power loss. The bypass capacitor from gate 2 to ground provides a short to any high-frequency signal that may get to that point. It is necessary to maintain the bias stability set up by $R_1$ and $R_2$. The MFE 3007 MOSFET used in this circuit provides a minimum power gain of 18 dB at 200 MHz.



## 3 LIMITERS

A limiter is a circuit whose output is a constant amplitude for all inputs above a critical value. Its function in an FM receiver is to remove any residual (unwanted) amplitude modulation and the amplitude variations due to noise. Both of these variations would have an undesirable effect if carried through to the speaker. In addition, the limiting function also provides AGC action because signals from the critical minimum value up to some maximum value provide a constant input level to the detector. By definition, the discriminator (detector) ideally would not respond to amplitude variations anyway because the information is contained in the amount of frequency deviation and the rate at which it deviates back and forth around its center frequency.

A transistor limiter is shown in Figure 3. Notice the dropping resistor, $R_C$, which limits the dc collector supply voltage. This provides a low dc collector voltage, which makes this stage very easily overdriven. This is the desired result.

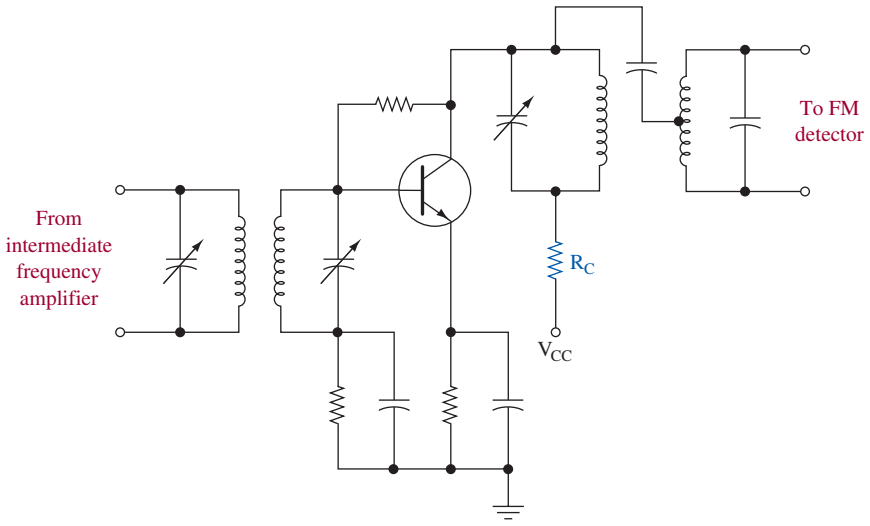


FIGURE 3 Transistor limiting circuit.

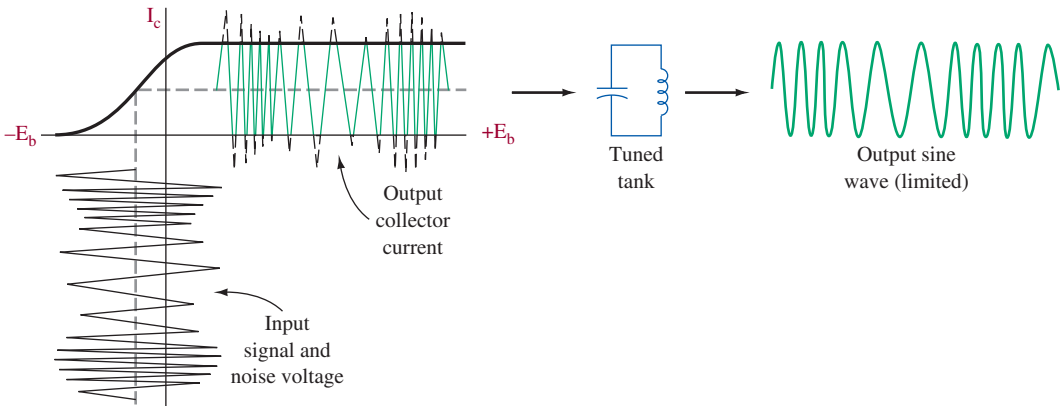


FIGURE 4 Limiter input/output and flywheel effects.

As soon as the input is large enough to cause clipping at both extremes of collector current, the critical limiting voltage has been attained and limiting action has started.

The input/output characteristic for the limiter is shown in Figure 4, and it shows the desired clipping action and the effects of feeding the limited (clipped) signal into an *LC* tank circuit tuned to the signal's center frequency. The natural flywheel effect of the tank removes all frequencies not near the center frequency and thus provides a sinusoidal output signal as shown. The omission of an *LC* circuit at the limiter output is desirable for some demodulator circuits. The quadrature detector (Section 4) uses the square-wave-like waveform that results.

## Limiting and Sensitivity

**Sensitivity**
minimum input RF signal to a receiver that is required to produce a specified audio signal at its output

**Quieting Voltage**
the minimum FM receiver input signal that begins the limiting process

**Threshold Voltage**
another term for quieting voltage

**Limiting Knee Voltage**
another term for quieting voltage

A limiter, such as the one shown in Figure 3, requires about 1 V of signal to begin limiting. Much amplification of the received signal is therefore needed prior to limiting, which explains its position following the IF stages. When enough signal arrives at the receiver to start limiting action, the set *quiets*, which means that background noise disappears. The **sensitivity** of an FM receiver is defined in terms of how much input signal is required to produce a specific level of quieting, normally 30 dB. This means that a good-quality receiver with a rated 1.5-$\mu$V sensitivity will have background noise 30 dB down from the desired input signal that has a 1.5-$\mu$V level.

The minimum required voltage for limiting is called the **quieting, threshold,** or **limiting knee voltage.** The limiter then provides a constant-amplitude output up to some maximum value that prescribes the limiting range. Going above the maximum value results either in a reduced and/or a distorted output. It is possible that a single-stage limiter will not allow for adequate range, thereby requiring a double limiter or the development of AGC control on the RF and IF amplifiers to minimize the possible limiter input range.

It is most common for today's FM receivers to use IC IF amplification. In these cases, the ICs have a built-in limiting action of very high quality (i.e., wide dynamic range). Section 7 provides an example of these ICs.

**Example 1**

*A certain FM receiver provides a voltage gain of 200,000 (106 dB) prior to its limiter. The limiter's quieting voltage is 200 mV. Determine the receiver's sensitivity.*

### Solution

To reach quieting, the input must be

$$\frac{200 \text{ mV}}{200{,}000} = 1\ \mu\text{V}$$

The receiver's sensitivity is therefore 1 $\mu$V.



## 4 Discriminators

The FM discriminator (detector) extracts the intelligence that has been modulated onto the carrier via frequency variations. It should provide an intelligence signal whose amplitude is dependent on instantaneous carrier frequency deviation and whose frequency is dependent on the carrier's rate of frequency deviation. A desired output amplitude versus input frequency characteristic for a broadcast FM discriminator is provided in Figure 5. Notice that the response is linear in the allowed area of frequency deviation and that the output amplitude is directly proportional to carrier frequency deviation. Keep in mind, however, that FM detection takes place following the IF amplifiers, which means that the ±75-kHz deviation is intact but that carrier frequency translation (usually to 10.7 MHz) has occurred.

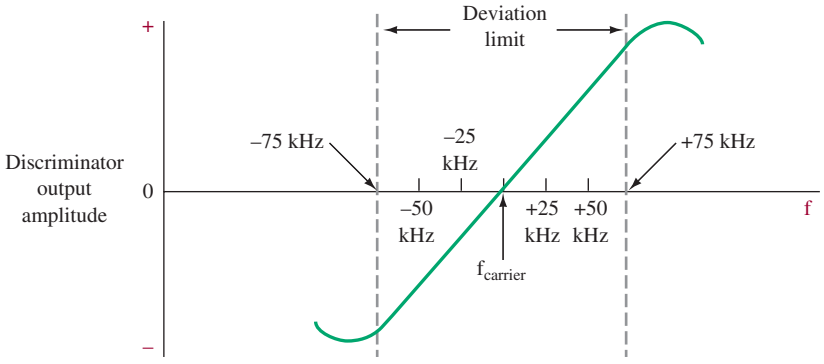


FIGURE 5 FM discriminator characteristic.

### Slope Detector

The easiest FM discriminator to understand is the slope detector in Figure 6. The *LC* tank circuit that follows the IF amplifiers and limiter is detuned from the carrier frequency so that $f_c$ falls in the middle of the most linear region of the response curve.

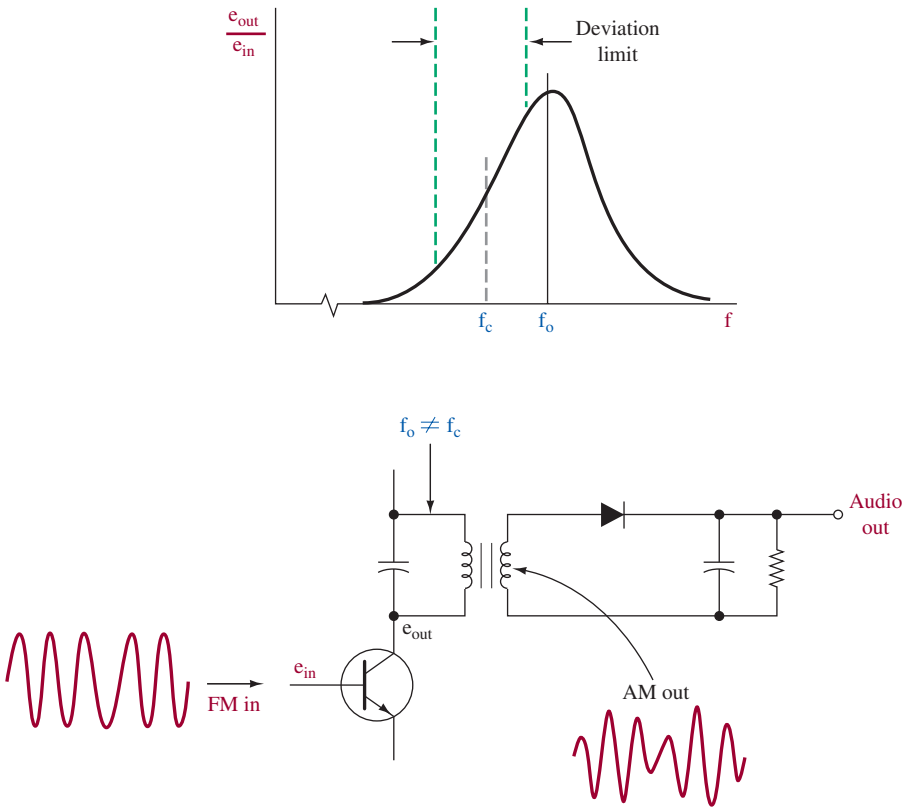


FIGURE 6 Slope detection.

When the FM signal rises in frequency above $f_c$, the output amplitude increases while deviations below $f_c$ cause a smaller output. The slope detector thereby changes FM into AM, and a simple diode detector then recovers the intelligence contained in the AM waveform's envelope. In an emergency, an AM receiver can be used to receive FM by detuning the tank circuit feeding the diode detector. Slope detection is not widely used in FM receivers because the slope characteristic of a tank circuit is not very linear, especially for the large-frequency deviations of wideband FM.

## Foster–Seely Discriminator

The two classical means of FM detection are the Foster–Seely discriminator and the ratio detector. While their once widespread use is now diminishing because of new techniques afforded by ICs, they remain a popular means of discrimination using a minimum of circuitry. A typical Foster–Seely discriminator circuit is shown in Figure 7. In it, the two tank circuits [$L_1C_1$ and $(L_2 + L_3)C_2$] are tuned exactly to the carrier frequency. Capacitors $C_c$, $C_4$, and $C_5$ are shorts to the carrier frequency. The following analysis applies to an unmodulated carrier input:

1. The carrier voltage $e_1$ appears directly across $L_4$ because $C_c$ and $C_4$ are shorts to the carrier frequency.

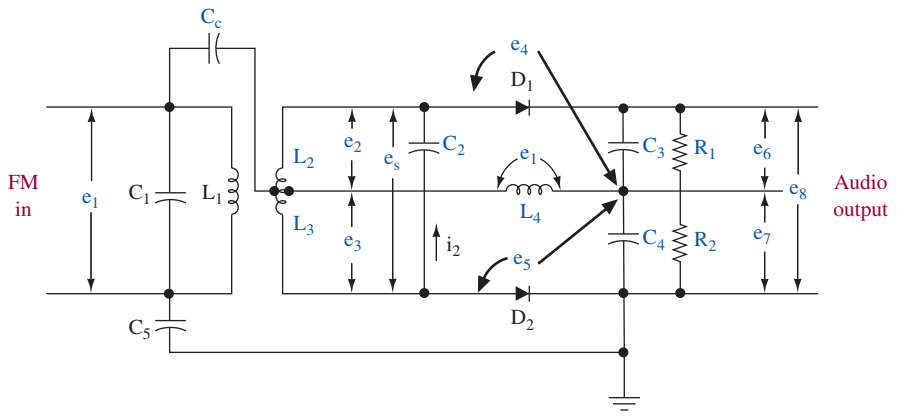


FIGURE 7 Foster–Seely discriminator.

2. The voltage $e_s$ across the transformer secondary ($L_2$ in series with $L_3$) is 180° out of phase with $e_1$ by transformer action, as shown in Figure 8(a). The circulating $L_2L_3C_2$ tank current, $i_s$, is in phase with $e_s$ because the tank is resonant.
3. The current $i_s$, flowing through inductance $L_2L_3$, produces a voltage drop that lags $i_s$ by 90°. The individual components of this voltage, $e_2$ and $e_3$, are thus displaced by 90° from $i_s$, as shown in Figure 8(a), and are 180° out of phase with each other because they are the voltage from the ends of a center-tapped winding.
4. The voltage $e_4$ applied to the diode $D_1$, $C_3$, and $R_1$ network will be the vector sum of $e_1$ and $e_2$ [Figure 8(a)]. Similarly, the voltage $e_5$ is the sum of $e_1$ and $e_3$. The magnitude of $e_6$ is proportional to $e_4$ while $e_7$ is proportional to $e_5$.
5. The output voltage, $e_8$, is equal to the sum of $e_6$ and $e_7$ and is zero because the diodes $D_1$ and $D_2$ will be conducting current equally (because $e_4 = e_5$) but in opposite directions through the $R_1C_3$ and $R_2C_4$ networks.

The discriminator output is zero with no modulation (zero frequency deviation), as is desired. The following discussion now considers circuit action at some instant when the input signal $e_1$ is above the carrier frequency. The phasor diagram of Figure 8(b) is used to illustrate this condition:

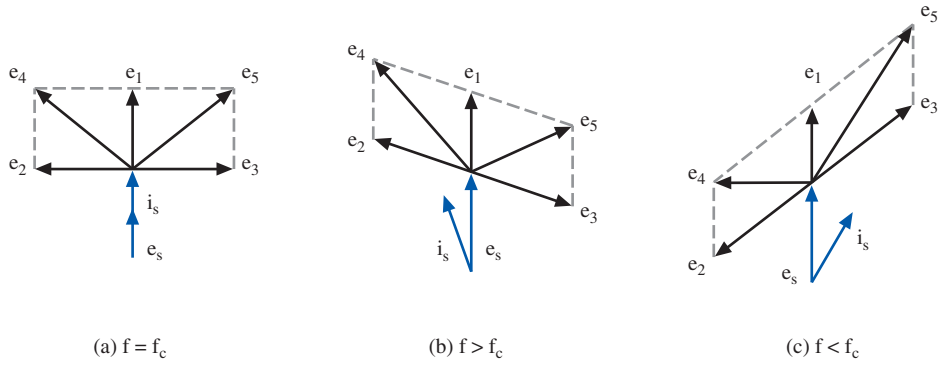


FIGURE 8 Discriminator phase relations.

1. Voltages $e_1$ and $e_s$ are as before, but $e_s$ now sees an inductive reactance because the tank circuit is above resonance. Therefore, the circulating tank current, $i_s$, lags $e_s$.
2. The voltages $e_2$ and $e_3$ must remain 90° out of phase with $i_s$, as shown in Figure 8(b). The new vector sums of $e_2 + e_1$ and $e_3 + e_1$ are no longer equal, so $e_4$ causes a heavier conduction of $D_1$ than exists for $D_2$.
3. The output, $e_8$, which is the sum of $e_6$ and $e_7$, will go positive because the current down through $R_1C_3$ is greater than the current up through $R_2C_4$ ($e_4$ is greater than $e_5$).

The output for frequencies above resonance ($f_c$) is therefore positive, while the phasor diagram in Figure 8(c) shows that at frequencies below resonance the output goes negative. The amount of output is determined by the amount of frequency deviation, while the frequency of the output is determined by the rate at which the FM input signal varies around its carrier or center value.

## Ratio Detector

While the Foster–Seely discriminator just described offers excellent linear response to wideband FM signals, it also responds to any undesired input amplitude variations. The *ratio detector* does not respond to amplitude variations and thereby minimizes the required limiting before detection.

The ratio detector, shown in Figure 9, is a circuit designed to respond only to frequency changes of the input signal. Amplitude changes in the input have no effect upon the output. The input circuit of the ratio detector is identical to that of the Foster–Seely discriminator circuit. The most immediately obvious difference is the reversal of one of the diodes.

The ratio detector circuit operation is similar to the Foster–Seely. A detailed analysis will therefore not be given. Notice the large electrolytic capacitor, $C_5$, across the $R_1$–$R_2$ combination. This maintains a constant voltage that is equal to the peak voltage across the diode input. This feature eliminates variations in the FM signal, thus providing amplitude limiting. The sudden changes in the input signal's amplitude are suppressed by the large capacitor. The Foster–Seely discriminator does not provide amplitude limiting. The voltage $E_s$ is

$$E_s = e_1 + e_2$$

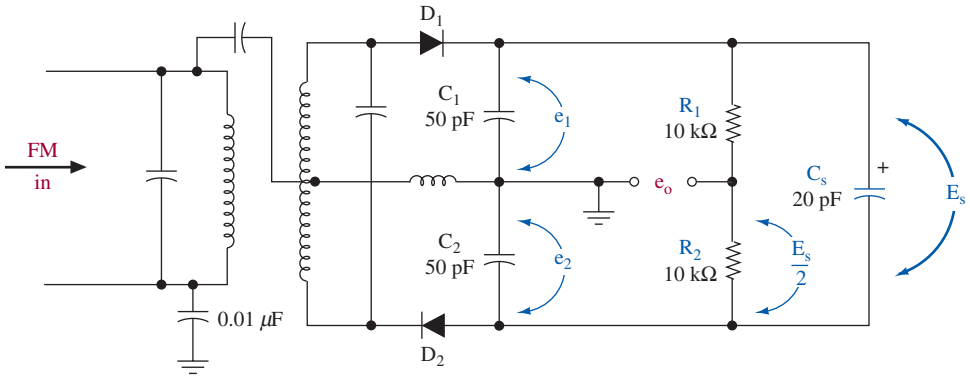


FIGURE 9 Ratio detector.

and

$$e_0 = \frac{E_s}{2} - e_2 = \frac{e_1 + e_2}{2} - e_2$$
$$= \frac{e_1 - e_2}{2}$$

When $f_{in} = f_c$, $e_1 = e_2$ and hence the desired zero output occurs. When $f_{in} > f_c$, $e_1 > e_2$, and when $f_{in} < f_c$, $e_1 < e_2$. The desired frequency-dependent output characteristic results.

The component values shown in Figure 9 are typical for a 10.7-MHz IF FM input signal. The output level of the ratio detector is one-half that for the Foster–Seely circuit.

## Quadrature Detector

The Foster–Seely and ratio detector circuits do not lend themselves to integration on a single chip due to the transformer required. This has led to increased usage of the quadrature detector and phase-locked loop (PLL). The PLL is introduced in the next section.

Quadrature detectors derive their name from use of the FM signal in phase and 90° out of phase. The two signals are said to be in **quadrature**—at a 90° angle. The circuit in Figure 10 shows an FM quadrature detector using an exclusive-OR gate. The limited IF output is applied directly to one input and the phase-shifted signal to the other. Notice that this circuit uses the limited signal that has not been changed back to a sine wave. The *L*, *C*, and *R* values used at the circuit's input are chosen to provide a 90° phase shift at the carrier frequency to the signal 2 input. The signal 2 input is a sine wave due to the *LC* circuit effects. The upward and downward frequency deviation of the FM signal results in a corresponding higher or lower phase shift. With one input to the gate shifted, the gate output will be a series of pulses with a width proportional to the phase difference. The low-pass *RC* filter at the gate output sums the output, giving an average value that is the intelligence signal. The gate output for three different phase conditions is shown at Figure 10(b). The *RC* circuit output level for each case is shown with dashed lines. This corresponds to the intelligence level at those particular conditions.

**Quadrature**
signals at a 90° angle

An analog quadrature detector is possible using a differential amplifier configuration, as shown in Figure 11. A limited FM signal switches the transistor current source ($Q_1$) of the differential pair $Q_2 + Q_3$. $L_1$ and $C_2$ should be resonant at the IF frequency. The $L_1$–$C_2$–$C_1$ combination causes the desired frequency-dependent phase shift between the two signals applied to $Q_2$ and $Q_1$. The conduction through $Q_3$ depends on the coincident phase relationships of these two signals. The pulses generated at $Q_3$'s collector are summed by the $R_1$–$C_3$ low-pass filter, and the resulting intelligence signal is taken at $Q_4$'s emitter. $R_2$ is adjusted to yield the desired zero-volt output when an undeviating FM carrier is the circuit's input signal.

The popular 3089 LIC shown in Section 7 uses the analog quadrature detection technique. It provides an excellent total harmonic distortion (THD) specification of 0.1 percent (typically) for a 10.7-MHz IF and ±75-kHz deviation.

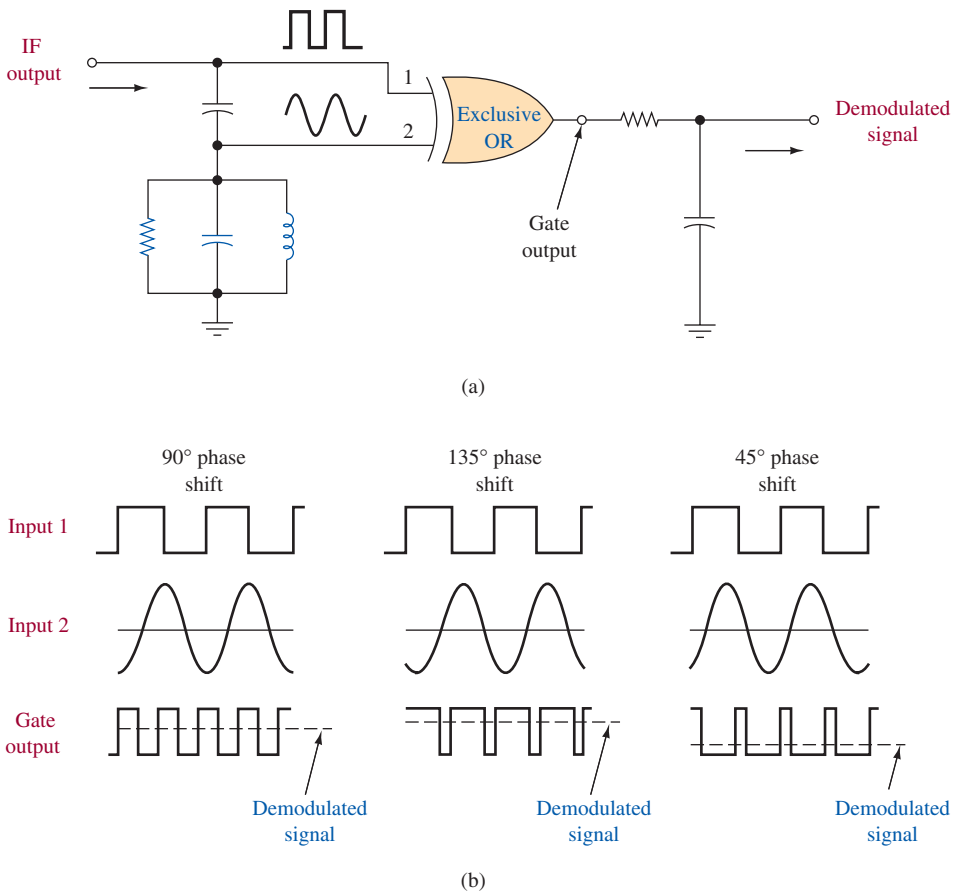


FIGURE 10 Quadrature detection.

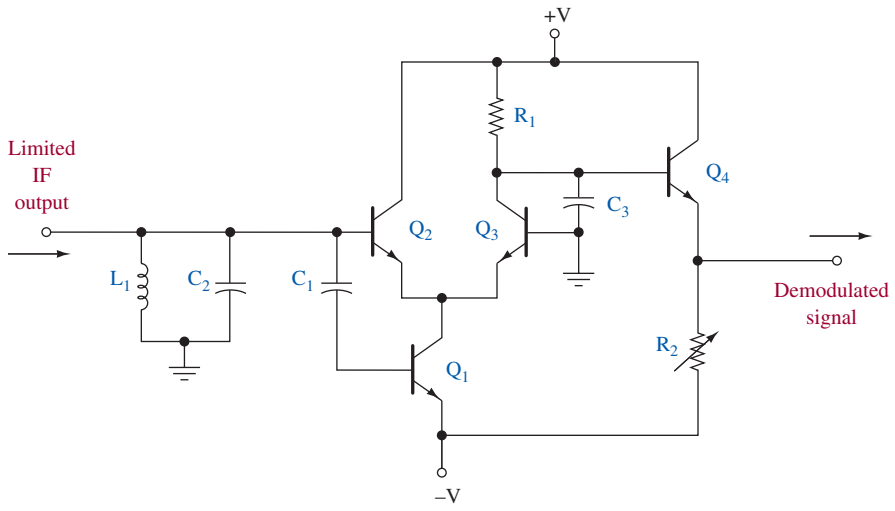


FIGURE 11 Analog quadrature detector.



# 5 Phase-Locked Loop

**Phase-Locked Loop**
closed-loop control system that uses negative feedback to maintain constant output frequency

The **phase-locked loop** (PLL) has become increasingly popular as a means of FM demodulation in recent years. It eliminates the need for the intricate coil adjustments of the previously discussed discriminators and has many other uses in the field of electronics. It is an example of an old idea, originated in 1932, that was given a new life by integrated circuit technology. Prior to its availability in a single IC package in 1970, its complexity in discrete circuitry form made it economically unfeasible for most applications.

The PLL is an electronic feedback control system as represented by the block diagram in Figure 12. This input is to the **phase comparator,** or **phase detector** as it is also called. The VCO within the PLL generates the other signal applied to the comparator.

**Phase Comparator**
circuit that provides an output proportional to the phase difference of two inputs

**Phase Detector**
another term for phase comparator

The comparator compares the input signal and the output of the VCO and develops an error signal proportional to the difference between the two. This error signal drives the VCO to change frequency so that the error is reduced to zero. If the VCO frequency equals the input frequency, the PLL has achieved lock and the control voltage will be constant for as long as the PLL input frequency remains constant.

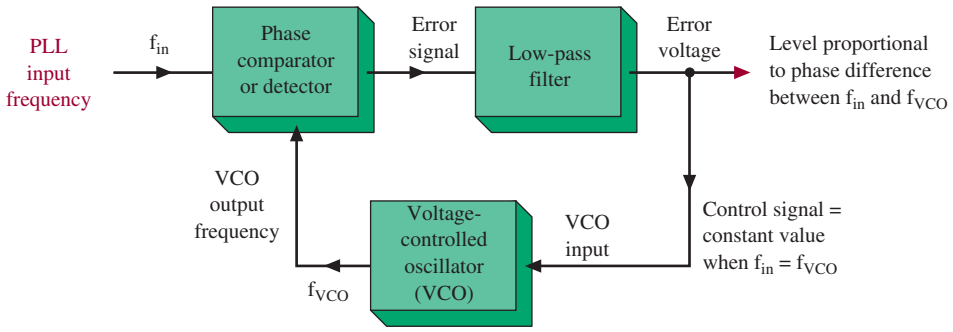


FIGURE 12 PLL block diagram.

## PLL Capture and Lock

If the VCO starts to change frequency, it is in the **capture state.** It then continues to change frequency until its output is the same frequency as the input. At that point, the PLL is **locked;** the VCO frequency now equals that of the input signal. The PLL has three possible states of operation:

**Capture State**
when the phase comparator of a PLL generates a signal that forces the VCO to equal the input frequency

**Locked**
a PLL in the capture state

1. Free-running
2. Capture
3. Locked or tracking

If the input and VCO frequency are too far apart, the PLL free-runs at the nominal VCO frequency, which is determined by an external timing capacitor. This is not a normally used mode of operation. If the VCO and input frequency are close enough, the capture process begins and continues until the locked condition is reached. Once tracking (lock) begins, the VCO can remain locked over a wider input-frequency-range variation than was necessary to achieve capture. The tracking and capture ranges are a function of external resistors and/or capacitors selected by the user.

**Example 2**

*A PLL is set up so that its VCO free-runs at 10 MHz. The VCO does not change frequency until the input is within 50 kHz of 10 MHz. After that condition, the VCO follows the input to ±200 kHz of 10 MHz before the VCO starts to free-run again. Determine the lock and capture ranges of the PLL.*

**Solution**

The capture occurred at 50 kHz from the free-running VCO frequency. Assume symmetrical operation, which implies a capture range of 50 kHz × 2 = 100 kHz. Once captured, the VCO follows the input to a 200-kHz deviation, implying a lock range of 200 kHz × 2 = 400 kHz.

## PLL FM Demodulator

If the PLL input is an FM signal, the low-pass filter output (error voltage) is the demodulated signal. The modulated FM carrier changes frequency according to the modulating signal. The function of the phase-locked loop is to hold the VCO frequency in step with this changing carrier. If the carrier frequency increases, for example, the error voltage developed by the phase comparator and the low-pass filter rises to make the VCO frequency rise. Let the carrier frequency fall and the error voltage output drops to decrease the VCO frequency. Thus, we see that the error voltage matches the modulating signal back at the transmitter; the error signal is the demodulated output.

The VCO input control signal (demodulated FM) causes the VCO output to match the FM signal applied to the PLL (comparator input). If the FM carrier (center) frequency drifts because of local oscillator drift, the PLL readjusts itself and no realignment is necessary. In a conventional FM discriminator, any shift in the FM carrier frequency results in a distorted output because the *LC* detector circuits are then untuned. The PLL FM discriminator requires no tuned circuits nor their associated adjustments and adjusts itself to any carrier frequency drifts caused by LO or transmitted carrier drift. In addition, the PLL normally has large amounts of internal amplification, which allows the input signal to vary from the microvolt region up to several volts. Since the phase comparator responds only to phase changes and not to amplitudes, the PLL is seen to provide a limiting function of extremely wide range. The use of PLL FM detectors is widespread in current designs.

## LM 565 PLL

The circuit shown in Figure 13 demonstrates how a PLL can be used to demodulate a frequency-modulated signal. This circuit consists of an FM source, generated by an LM566 voltage-controlled oscillator (VCO), which is being input into an LM565 PLL. The circuit provides a simple test for PLL operation. The input signal is applied to $V_{in}$ (pin 5 of the VCO). The 1-$\mu$f capacitor couples the ac input signal into the VCO input. The VCO is prebiased to a center operating frequency by the voltage divider formed by resistor $R_1$, $R_2$, and $R_3$. Potentiometer $R_2$ provides adjustment of the center frequency. The output of the VCO is input into the 565 PLL through coupling capacitor $C_c$. The **free-running frequency** of the PLL

**Free-Running Frequency**
frequency at which the PLL runs with the input signal removed

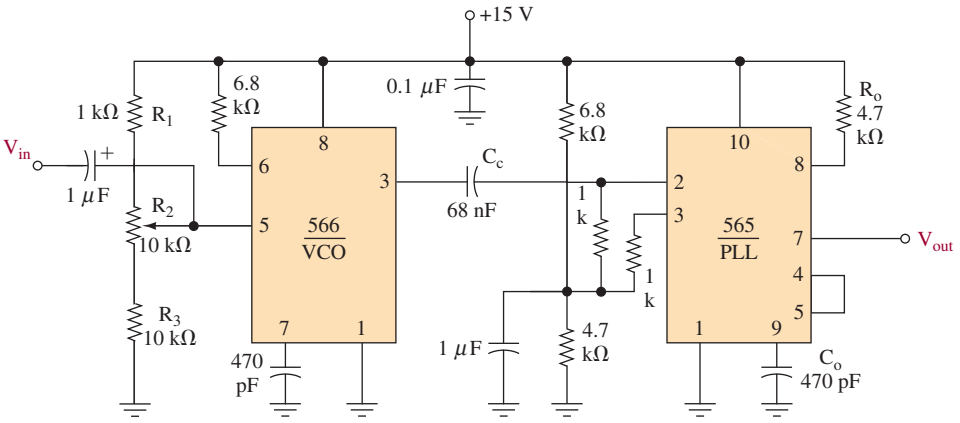


FIGURE 13 An example of an FM receiver using the LM565 PLL.

is set to the center frequency of the VCO by the timing capacitor and resistor, $C_o$ (470 pF) and $R_o$ (4.7 kΩ).

The specifications for the LM565 PLL are given in the data sheets in Figure 14. The LM565 can be used in many applications, including data synchronization, modems, low-frequency FSK demodulation, low-frequency FM demodulation, and frequency synthesis. The pin configuration for the device of the data sheets.

The formulas used for component calculations for the LM565 are provided in the manufacturers' specifications and application sheets. The following calculations are for the PLL shown in Figure 13.

1. *Free-Running Frequency*

$$f_o \simeq \frac{0.3}{(R_o\, C_o)} = \frac{0.3}{(4.7\ \text{k}\Omega)(470 \times 10^{-12})} = 135.8\ \text{kHz}$$

2. *Loop Gain* $(K_oK_D)$ The **loop gain** is

$$K_o\, K_D = \frac{33.6\, f_o}{V_c} = \frac{(33.6)(135.8\ \text{kHz})}{15} = 3.04 \times 10^5$$

**Loop Gain**
total gain of all the internal blocks inside the PLL

Expressed in dB, the loop gain is $10 \log(3.04 \times 10^5) = 54.8$ dB.

3. *Hold-In Range*

$$f_H = \pm\frac{8\, f_o}{V_c} = \frac{(8)(135.8\ \text{k}\Omega)}{15} = \pm 72.43\ \text{k}\Omega$$

*Note:* The **hold-in range** is the frequency band through which the PLL will remain locked.

**Hold-In Range**
range of frequencies in which the PLL will remain locked

National Semiconductor

May 1999

# LM565/LM565C Phase Locked Loop

## General Description

The LM565 and LM565C are general purpose phase locked loops containing a stable, highly linear voltage controlled oscillator for low distortion FM demodulation, and a double balanced phase detector with good carrier suppression. The VCO frequency is set with an external resistor and capacitor, and a tuning range of 10:1 can be obtained with the same capacitor. The characteristics of the closed loop system — bandwidth, response speed, capture and pull in range — may be adjusted over a wide range with an external resistor and capacitor. The loop may be broken between the VCO and the phase detector for insertion of a digital frequency divider to obtain frequency multiplication.

The LM565H is specified for operation over the −55°C to +125°C military temperature range. The LM565CN is specified for operation over the 0°C to +70°C temperature range.

## Features

- 200 ppm/°C frequency stability of the VCO
- Power supply range of ±5 to ±12 volts with 100 ppm/% typical
- 0.2% linearity of demodulated output
- Linear triangle wave with in phase zero crossings available
- TTL and DTL compatible phase detector input and square wave output
- Adjustable hold in range from ±1% to > ±60%

## Applications

- Data and tape synchronization
- Modems
- FSK demodulation
- FM demodulation
- Frequency synthesizer
- Tone decoding
- Frequency multiplication and division
- SCA demodulators
- Telemetry receivers
- Signal regeneration
- Coherent demodulators

## Connection Diagrams

**Metal Can Package**

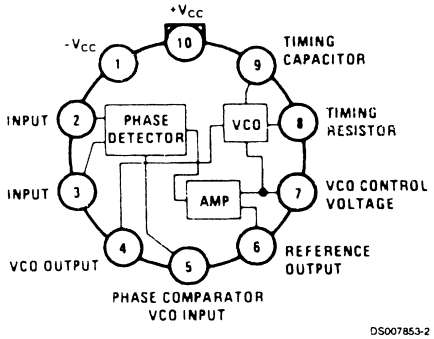


**Order Number LM565H**
**See NS Package Number H10C**

**Dual-in-Line Package**

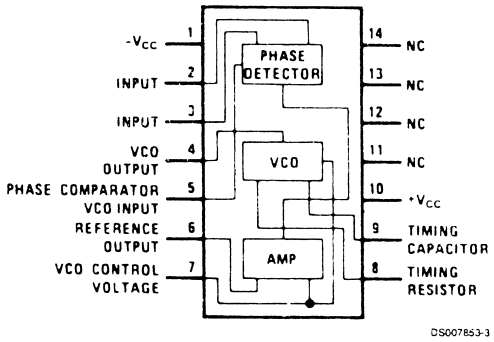


**Order Number LM565CN**
**See NS Package Number N14A**

© 1999 National Semiconductor Corporation 

FIGURE 14 The LM565 phase-locked-loop data sheets. (Reprinted with permission of National Semiconductor Corporation.)

## Absolute Maximum Ratings (Note 1)

**If Military/Aerospace specified devices are required, please contact the National Semiconductor Sales Office/ Distributors for availability and specifications.**

| | |
|---|---|
| Supply Voltage | ±12V |
| Power Dissipation (Note 2) | 1400 mW |
| Differential Input Voltage | ±1V |
| Operating Temperature Range | |
| LM565H | −55°C to +125°C |
| LM565CN | 0°C to +70°C |
| Storage Temperature Range | −65°C to +150°C |
| Lead Temperature (Soldering, 10 sec.) | 260°C |

## Electrical Characteristics

AC Test Circuit, $T_A$ = 25°C, $V_{CC}$ = ±6V

| Parameter | Conditions | LM565 | | | LM565C | | | Units |
|---|---|---|---|---|---|---|---|---|
| | | Min | Typ | Max | Min | Typ | Max | |
| Power Supply Current | | | 8.0 | 12.5 | | 8.0 | 12.5 | mA |
| Input Impedance (Pins 2, 3) | $-4V < V_2, V_3 < 0V$ | 7 | 10 | | | 5 | | kΩ |
| VCO Maximum Operating Frequency | $C_o$ = 2.7 pF | 300 | 500 | | 250 | 500 | | kHz |
| VCO Free-Running Frequency | $C_o$ = 1.5 nF<br>$R_o$ = 20 kΩ<br>$f_o$ = 10 kHz | −10 | 0 | +10 | −30 | 0 | +30 | % |
| Operating Frequency Temperature Coefficient | | | −100 | | | −200 | | ppm/°C |
| Frequency Drift with Supply Voltage | | | 0.1 | 1.0 | | 0.2 | 1.5 | %/V |
| Triangle Wave Output Voltage | | 2 | 2.4 | 3 | 2 | 2.4 | 3 | $V_{p-p}$ |
| Triangle Wave Output Linearity | | | 0.2 | | | 0.5 | | % |
| Square Wave Output Level | | 4.7 | 5.4 | | 4.7 | 5.4 | | $V_{p-p}$ |
| Output Impedance (Pin 4) | | | 5 | | | 5 | | kΩ |
| Square Wave Duty Cycle | | 45 | 50 | 55 | 40 | 50 | 60 | % |
| Square Wave Rise Time | | | 20 | | | 20 | | ns |
| Square Wave Fall Time | | | 50 | | | 50 | | ns |
| Output Current Sink (Pin 4) | | 0.6 | 1 | | 0.6 | 1 | | mA |
| VCO Sensitivity | $f_o$ = 10 kHz | | 6600 | | | 6600 | | Hz/V |
| Demodulated Output Voltage (Pin 7) | ±10% Frequency Deviation | 250 | 300 | 400 | 200 | 300 | 450 | $mV_{p-p}$ |
| Total Harmonic Distortion | ±10% Frequency Deviation | | 0.2 | 0.75 | | 0.2 | 1.5 | % |
| Output Impedance (Pin 7) | | | 3.5 | | | 3.5 | | kΩ |
| DC Level (Pin 7) | | 4.25 | 4.5 | 4.75 | 4.0 | 4.5 | 5.0 | V |
| Output Offset Voltage $\lvert V_7 - V_6 \rvert$ | | | 30 | 100 | | 50 | 200 | mV |
| Temperature Drift of $\lvert V_7 - V_6 \rvert$ | | | 500 | | | 500 | | µV/°C |
| AM Rejection | | 30 | 40 | | | 40 | | dB |
| Phase Detector Sensitivity $K_D$ | | | 0.68 | | | 0.68 | | V/radian |

**Note 1:** Absolute Maximum Ratings indicate limits beyond which damage to the device may occur. Operating Ratings indicate conditions for which the device is functional, but do not guarantee specific performance limits. Electrical Characteristics state DC and AC electrical specifications under particular test conditions which guarantee specific performance limits. This assumes that the device is within the Operating Ratings. Specifications are not guaranteed for parameters where no limit is given, however, the typical value is a good indication of device performance.

**Note 2:** The maximum junction temperature of the LM565 and LM565C is +150°C. For operation at elevated temperatures, devices in the TO-5 package must be derated based on a thermal resistance of +150°C/W junction to ambient or +45°C/W junction to case. Thermal resistance of the dual-in-line package is +85°C/W.



FIGURE 14 (*Continued*)

## AC Test Circuit

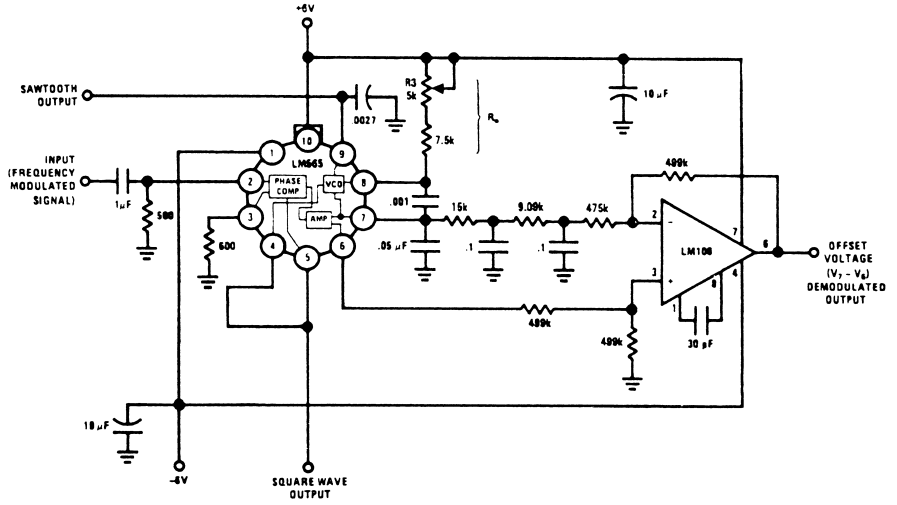


Note: $S_1$ open for output offset voltage ($V_7 - V_6$) measurement.

## Typical Applications

### 2400 Hz Synchronous AM Demodulator

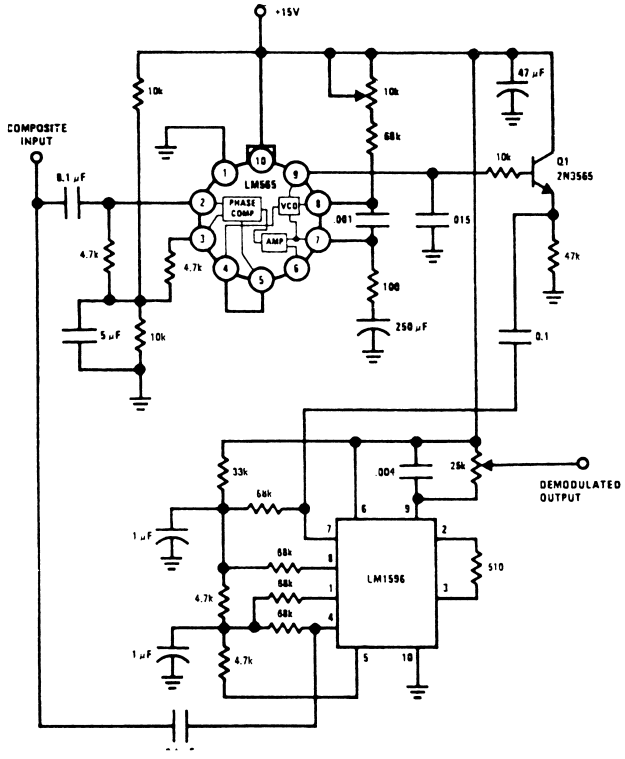




FIGURE 14 (*Continued*)

## Typical Applications (Continued)

**FSK Demodulator (2025–2225 cps)**

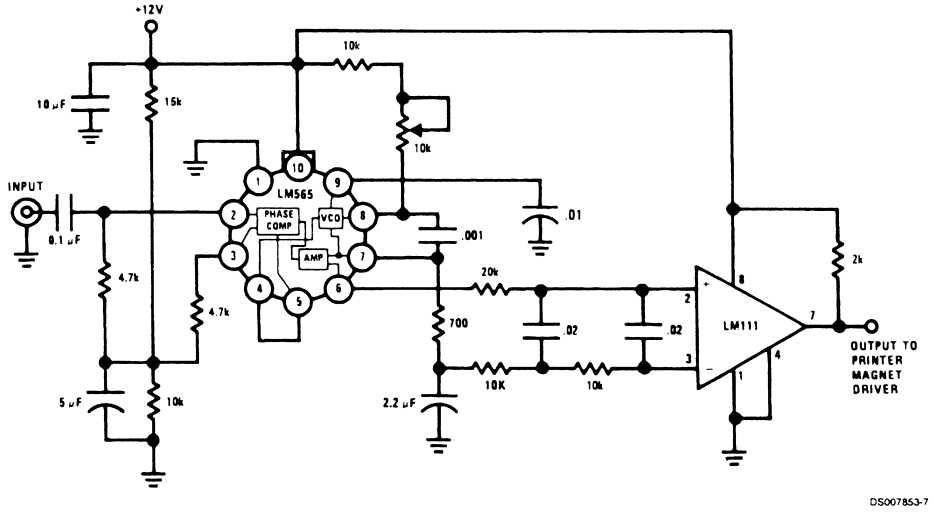


DS007853-7

**FSK Demodulator with DC Restoration**

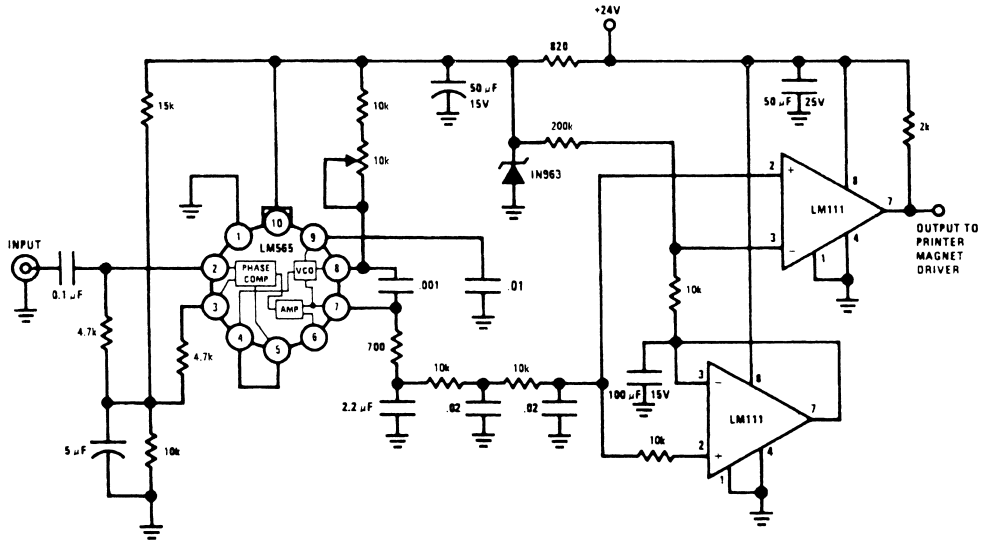


DS007853-8

www.national.com

FIGURE 14 (*Continued*)

## Applications Information

In designing with phase locked loops such as the LM565, the important parameters of interest are:

FREE RUNNING FREQUENCY

$$f_o \cong \frac{0.3}{R_o C_o}$$

LOOP GAIN: relates the amount of phase change between the input signal and the VCO signal for a shift in input signal frequency (assuming the loop remains in lock). In servo theory, this is called the "velocity error coefficient."

$$\text{Loop gain} = K_o K_D \left(\frac{1}{\text{sec}}\right)$$

$$K_o = \text{oscillator sensitivity} \left(\frac{\text{radians/sec}}{\text{volt}}\right)$$

$$K_D = \text{phase detector sensitivity} \left(\frac{\text{volts}}{\text{radian}}\right)$$

The loop gain of the LM565 is dependent on supply voltage, and may be found from:

$$K_o K_D = \frac{33.6\, f_o}{V_C}$$

$f_o$ = VCO frequency in Hz

$V_c$ = total supply voltage to circuit

Loop gain may be reduced by connecting a resistor between pins 6 and 7; this reduces the load impedance on the output amplifier and hence the loop gain.

HOLD IN RANGE: the range of frequencies that the loop will remain in lock after initially being locked.

$$f_H = \pm \frac{8\, f_o}{V_C}$$

$f_o$= free running frequency of VCO

$V_c$= total supply voltage to the circuit

### THE LOOP FILTER

In almost all applications, it will be desirable to filter the signal at the output of the phase detector (pin 7); this filter may take one of two forms:

**Simple Lead Filter**

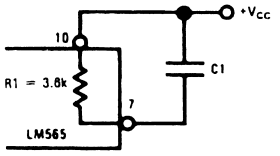


**Lag-Lead Filter**

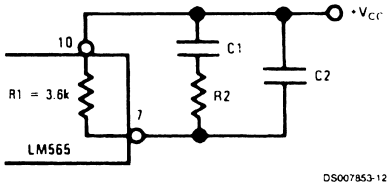


A simple lag filter may be used for wide closed loop bandwidth applications such as modulation following where the frequency deviation of the carrier is fairly high (greater than 10%), or where wideband modulating signals must be followed.

The natural bandwidth of the closed loop response may be found from:

$$f_n = \frac{1}{2\pi}\sqrt{\frac{K_o K_D}{R_1 C_1}}$$

Associated with this is a damping factor:

$$\delta = \frac{1}{2}\sqrt{\frac{1}{R_1 C_1 K_o K_D}}$$

For narrow band applications where a narrow noise bandwidth is desired, such as applications involving tracking a slowly varying carrier, a lead lag filter should be used. In general, if $1/R_1C_1 < K_o K_D$, the damping factor for the loop becomes quite small resulting in large overshoot and possible instability in the transient response of the loop. In this case, the natural frequency of the loop may be found from

$$f_n = \frac{1}{2\pi}\sqrt{\frac{K_o K_D}{\tau_1 + \tau_2}}$$

$$\tau_1 + \tau_2 = (R_1 + R_2)\, C_1$$

$R_2$ is selected to produce a desired damping factor $\delta$, usually between 0.5 and 1.0. The damping factor is found from the approximation:

$$\delta \cong \pi\, \tau_2 f_n$$

These two equations are plotted for convenience.

**Filter Time Constant vs Natural Frequency**

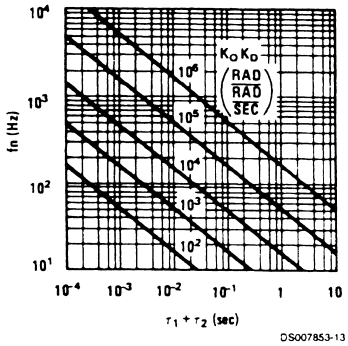




FIGURE 14 (*Continued*)

## 6 Stereo Demodulation

FM stereo receivers are identical to standard receivers up to the discriminator output. At this point, however, the discriminator output contains the 30-Hz to 15-kHz (L + R) signal *and* the 19-kHz subcarrier *and* the 23- to 53-kHz (L − R) signal. If a nonstereo (monaural) receiver is tuned to a stereo station, its discriminator output may contain the additional frequencies, but even the 19-kHz subcarrier is above the normal audible range, and its audio amplifiers and speaker would probably not pass it anyway. Thus, the nonstereo receiver reproduces the 30-Hz to 15-kHz (L + R) signal (a full monophonic broadcast) and is not affected by the other frequencies. This effect is illustrated in Figure 15.

The stereo receiver block diagram becomes more complex after the discriminator. At this point, the three signals are separated by filtering action. The (L + R) signal is obtained through a low-pass filter and given a delay so that it reaches the matrix

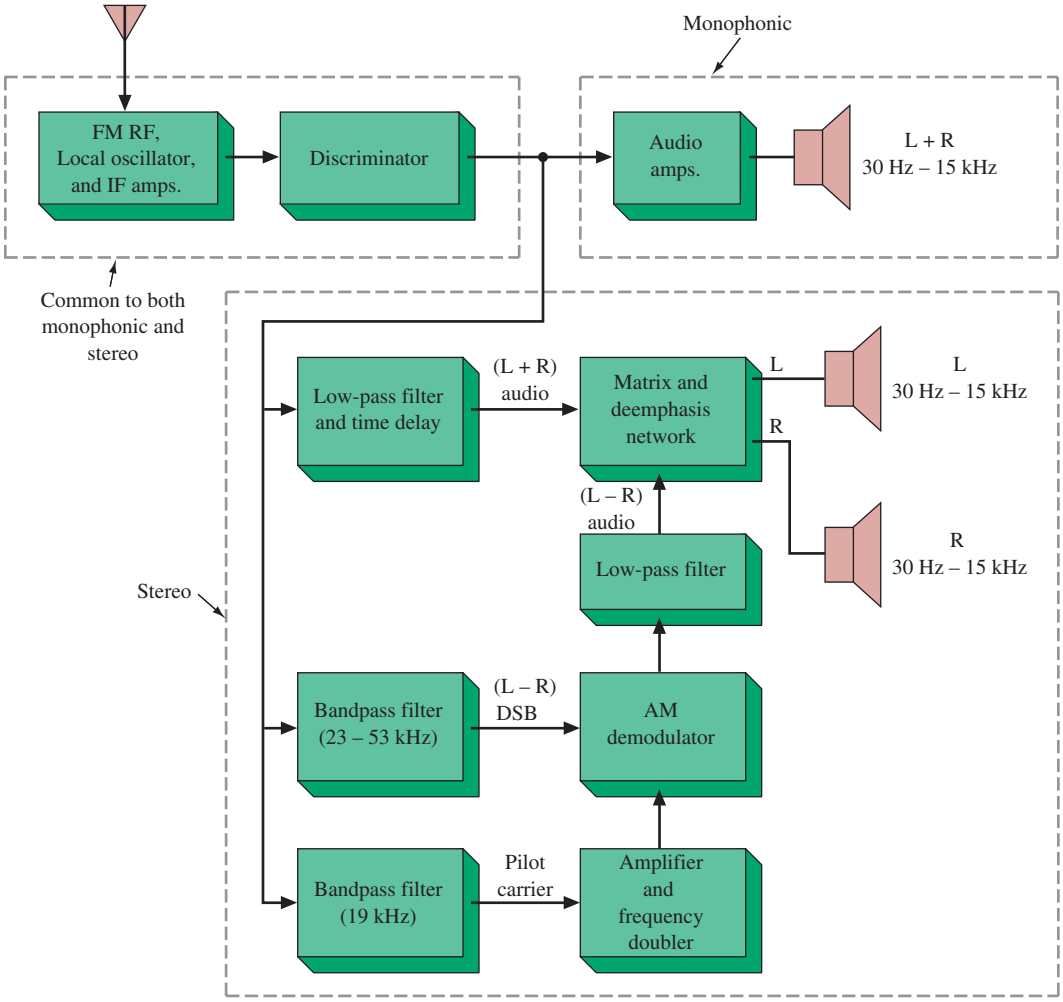


FIGURE 15 Monophonic and stereo receivers.

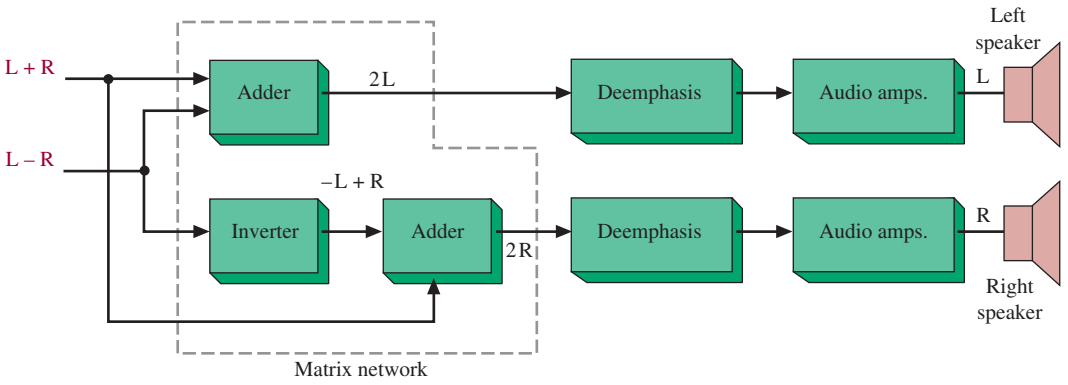


FIGURE 16 Stereo signal processing.

network in step with the (L − R) signal. A 23- to 53-kHz bandpass filter selects the (L − R) double sideband signal. A 19-kHz bandpass filter takes the pilot carrier and is multiplied by 2 to 38 kHz, which is the precise carrier frequency of the DSB suppressed carrier 23- to 53-kHz (L − R) signal. Combining the 38-kHz and (L − R) signals through the nonlinear device of an AM detector generates sum and difference outputs of which the 30-Hz to 15-kHz (L − R) components are selected by a low-pass filter. The (L − R) signal is thereby retranslated back down to the audio range and it and the (L + R) signal are applied to the matrix network for further processing.

Figure 16 illustrates the matrix function and completes the stereo receiver block diagram of Figure 15. The (L + R) and (L − R) signals are combined in an adder that cancels R because (L + R) + (L − R) = 2L. The (L − R) signal is also applied to an inverter, providing −(L − R ) = (−L + R), which is subsequently applied to another adder along with (L + R), which produces (−L + R) + (L + R) = 2R. The two individual signals for the right and left channels are then deemphasized and individually amplified to their own speaker. The process of FM stereo is ingenious in its relative simplicity and effectiveness in providing complete compatibility and doubling the amount of transmitted information through the use of multiplexing.

## SCA Decoder

**Subsidiary Communication Authorization** an additional channel of multiplexed information authorized by the FCC for stereo FM radio stations to feed services to selected customers

The FCC has also authorized FM stations to broadcast an additional signal on their carrier. It may be a voice communication or other signal for any nonbroadcast-type use. It is often used to transmit music programming that is usually commercial-free but paid for by subscription of department stores, supermarkets, and the like. It is termed the **subsidiary communication authorization** (SCA). It is frequency-multiplexed on the FM modulating signal, usually with a 67-kHz carrier and ±7.5-kHz (narrowband) deviation, as shown in Figure 17. An SCA decoder circuit using the 565 PLL is provided in Figure 18. A resistive voltage divider is used to establish a bias voltage for the input (pins 2 and 3). The demodulated FM signal is fed to the input through a two-stage high-pass filter (510 pF, 4.7 kΩ, 510 pF, 4.7 kΩ), both to allow capacitive coupling and to attenuate the stronger level of the stereo signals. The PLL is tuned to

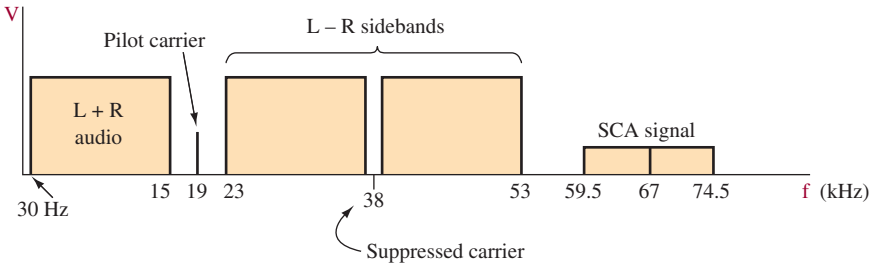


FIGURE 17 Composite stereo and SCA modulating signal.

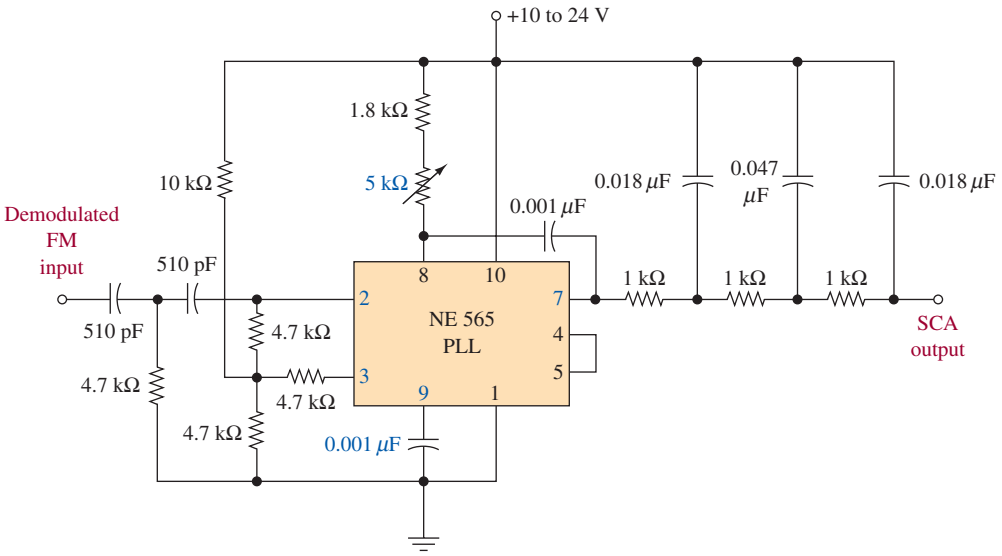


FIGURE 18 SCA PLL decoder.

about 67 kHz, with the 0.001-$\mu$F capacitor from pin 9 to ground and the 5-k$\Omega$ potentiometer providing fine adjustment. The demodulated output at pin 7 is fed through a three-stage low-pass filter to provide deemphasis and attenuate the high-frequency noise that often accompanies SCA transmission.

## LIC Stereo Decoder

The decoding of the stereo signals is normally accomplished via special function ICs. The CA3090 is such a device; a functional block diagram is provided in Figure 19. The input signal from the detector is amplified by a low-distortion preamplifier and simultaneously applied to both the 19- and 38-kHz synchronous detectors. A 76-kHz signal, generated by a local voltage-controlled oscillator (VCO), is counted down by two frequency dividers to a 38-kHz signal and to two 19-kHz signals in phase quadrature. The 19-kHz pilot tone supplied by the FM detector is compared to the locally generated 19-kHz signal in the synchronous detector.

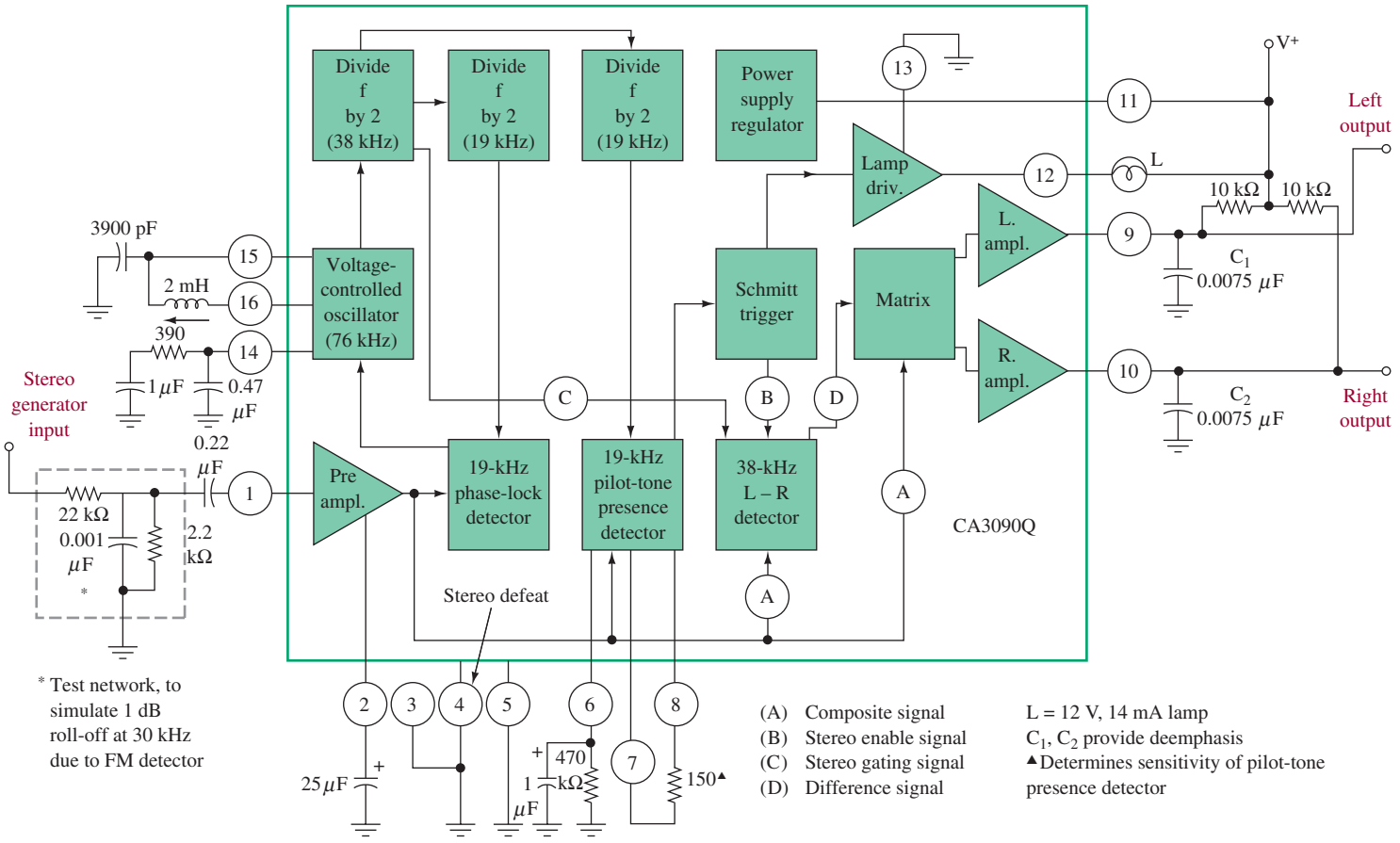


FIGURE 19 CA3090 stereo decoder. (Courtesy of RCA.)

The resultant signal controls the voltage-controlled oscillator so that it produces an output signal to phase-lock the stereo decoder with the pilot tone. A second synchronous detector compares the locally generated 19-kHz signal with the 19-kHz pilot tone. If the pilot tone exceeds an externally adjustable threshold voltage, a Schmitt trigger circuit is energized. The signal from the Schmitt trigger turns on the small light we see on the panel of our stereos that indicates stereo reception. It also enables the 38-kHz synchronous detector and automatically switches the CA3090 from monaural to stereo operation. The output signal from the 38-kHz detector and the composite signal from the preamplifier are applied to a matrixing circuit, from which emerge the resultant left and right channel audio signals. These signals are applied to their respective left and right channel amplifiers for amplification to a level sufficient to drive most audio power amplifiers.



## 7 FM Receivers

A modern approach to FM stereo reception is shown in Figure 20, which is a circuit diagram for the Philips Semiconductors TEA5767/68 single-chip FM stereo radio. The architecture of this IC has dramatically reduced the number of external components. Compare this circuit to the older style of FM receiver shown in Figure 21. In Figure 20, the RF signal connects to pins 35 and 37 on the TEA5767/68. An RF AGC circuit prevents overloading and limits intermodulation problems created by strong adjacent channels.

The circuit in Figure 20 has separate digital (pin 6) and analog (pin 33) grounds and requires a typical analog (pin 34) and digital (pin 7) supply voltage of 3.0 V. The stereo audio appears at pins 22 and 23. The circuit uses a crystal reference frequency to facilitate PLL tuning. External clock frequencies are 32.768 kHz or 13 MHz (pin 16) or 6.5 MHz (pin 17). The crystal oscillator frequencies are used for reference by the

- Frequency divider for the synthesizer PLL.
- IF counter timing.
- Stereo decoder free-running frequency adjustment.
- Center frequency adjustment of the IF filters.

Full microprocessor control of the TEA5767/68 including channel searching and selection audio control, and power on reset are facilitated via the chip's bus connections (pins 8, 9, 11, 12, 13, 14, and 15).

A typical older-style FM receiver involves use of discrete MOSFET RF and mixer stages with a separately excited bipolar transistor local oscillator, as shown in Figure 21. The antenna input signal is applied through the tuning circuit $L_1$, $C_{1A}$ to the gate of the 40822 MOSFET RF amplifier. Its output at the drain is coupled to the lower gate of the 40823 mixer MOSFET through the $C_{1B}$–$L_2$ tuned circuit. The 40244 BJT oscillator signal is applied to the upper gate of the mixer stage. The local oscillator tuned circuit that includes $C_{1C}$ uses a tapped inductor indicating a Hartley oscillator configuration. The tuning capacitor, $C_1$, has three separate ganged capacitors that vary the tuning range of the RF amp and mixer tuned circuits from 88 to 108 MHz while varying the local oscillator frequency from 98.7 to 118.7 MHz to generate a 10.7-MHz IF signal at the output of the mixer. The mixer output is applied to the commercially available 10.7-MHz double-tuned circuit $T_1$.

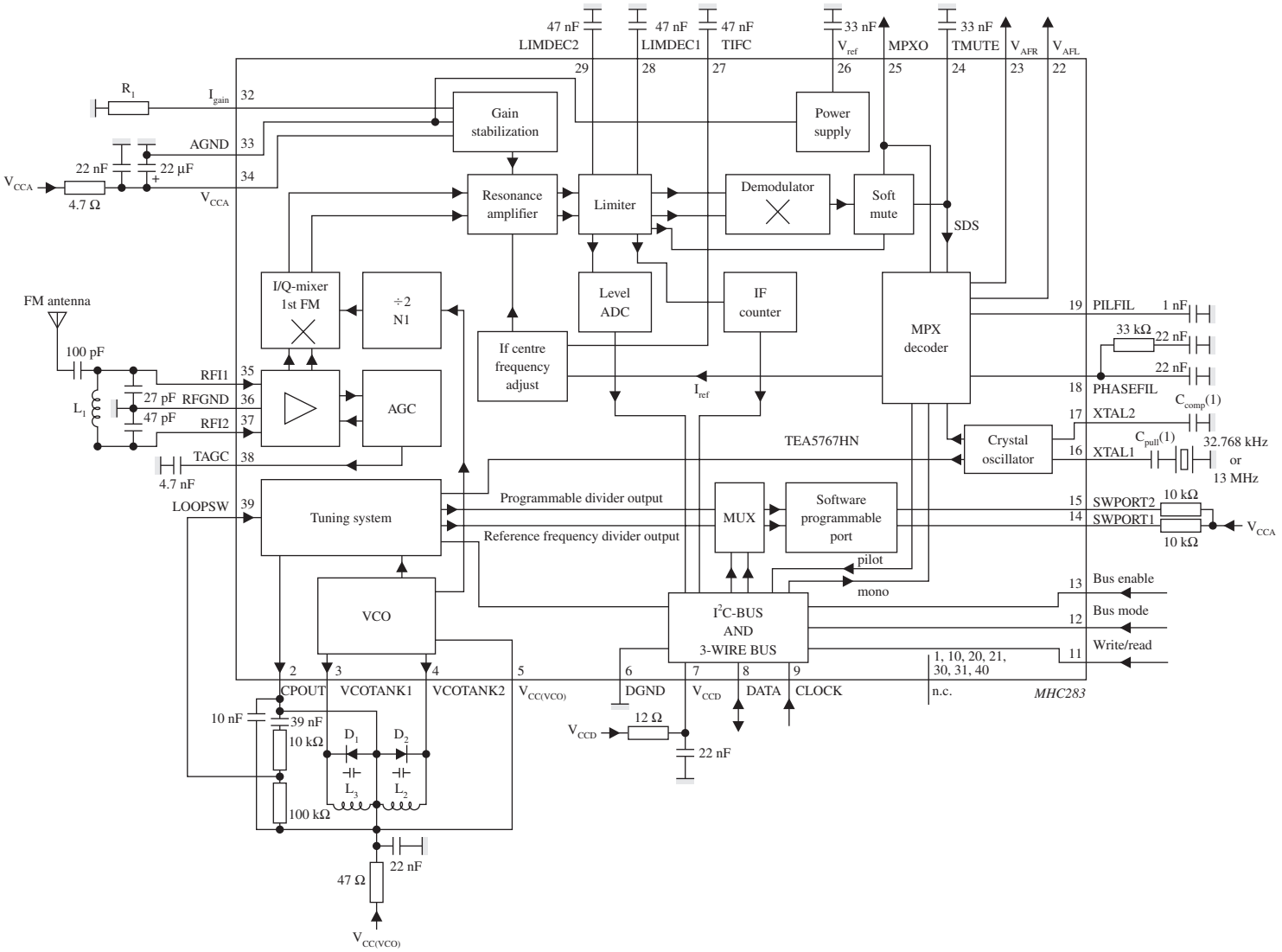


FIGURE 20 Block diagram of the Philips Semiconductors TEA5767 single-chip FM stereo radio.

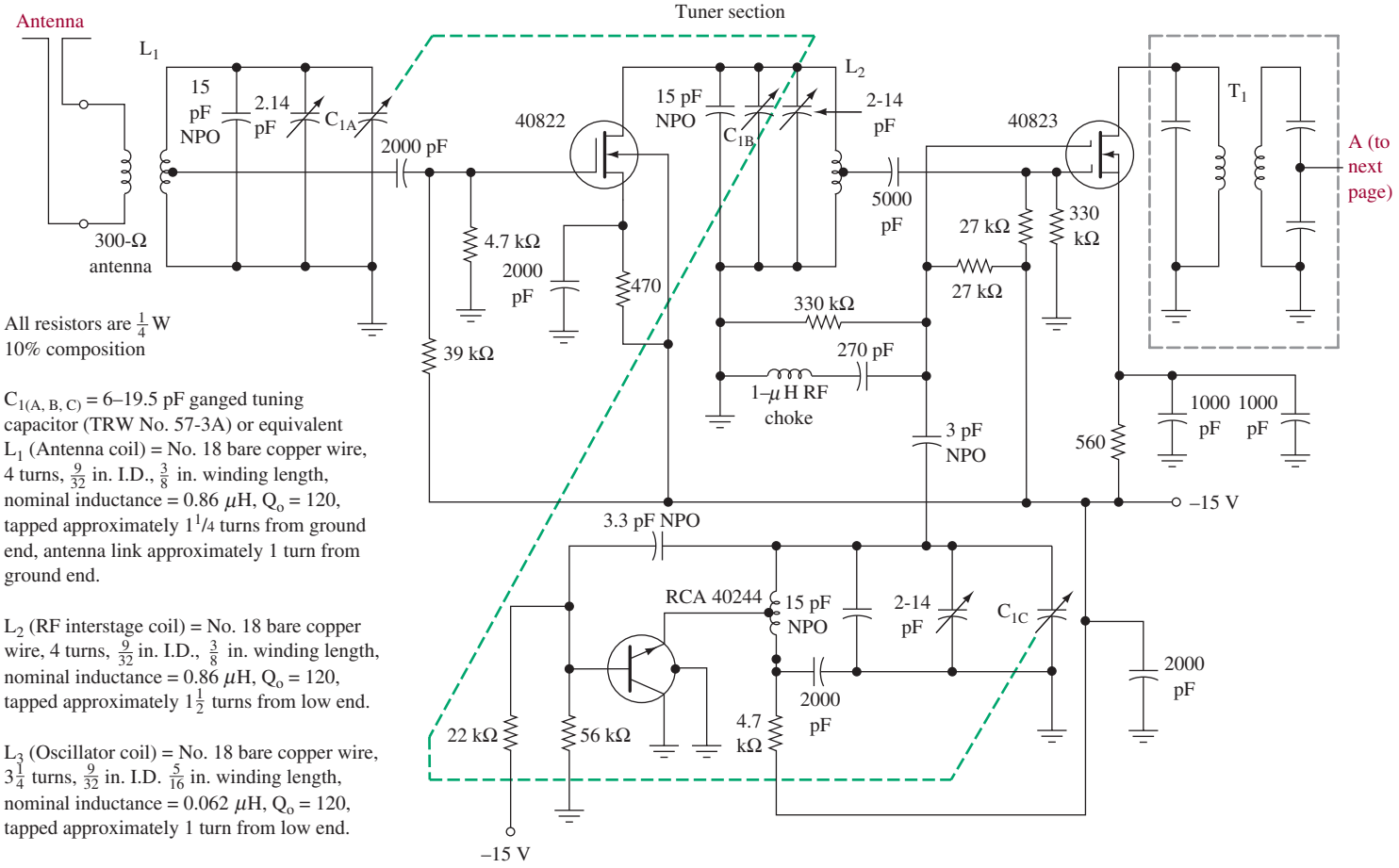


All resistors are $\frac{1}{4}$ W
10% composition

$C_{1(A, B, C)}$ = 6–19.5 pF ganged tuning capacitor (TRW No. 57-3A) or equivalent
$L_1$ (Antenna coil) = No. 18 bare copper wire, 4 turns, $\frac{9}{32}$ in. I.D., $\frac{3}{8}$ in. winding length, nominal inductance = 0.86 $\mu$H, $Q_o$ = 120, tapped approximately $1\frac{1}{4}$ turns from ground end, antenna link approximately 1 turn from ground end.

$L_2$ (RF interstage coil) = No. 18 bare copper wire, 4 turns, $\frac{9}{32}$ in. I.D., $\frac{3}{8}$ in. winding length, nominal inductance = 0.86 $\mu$H, $Q_o$ = 120, tapped approximately $1\frac{1}{2}$ turns from low end.

$L_3$ (Oscillator coil) = No. 18 bare copper wire, $3\frac{1}{4}$ turns, $\frac{9}{32}$ in. I.D. $\frac{5}{16}$ in. winding length, nominal inductance = 0.062 $\mu$H, $Q_o$ = 120, tapped approximately 1 turn from low end.

$T_1$ (Input transformer to IF amplifier) = TRW No. 21124-R2

(*Continued*)

FIGURE 21 Complete 88- to 108-MHz stereo receiver.

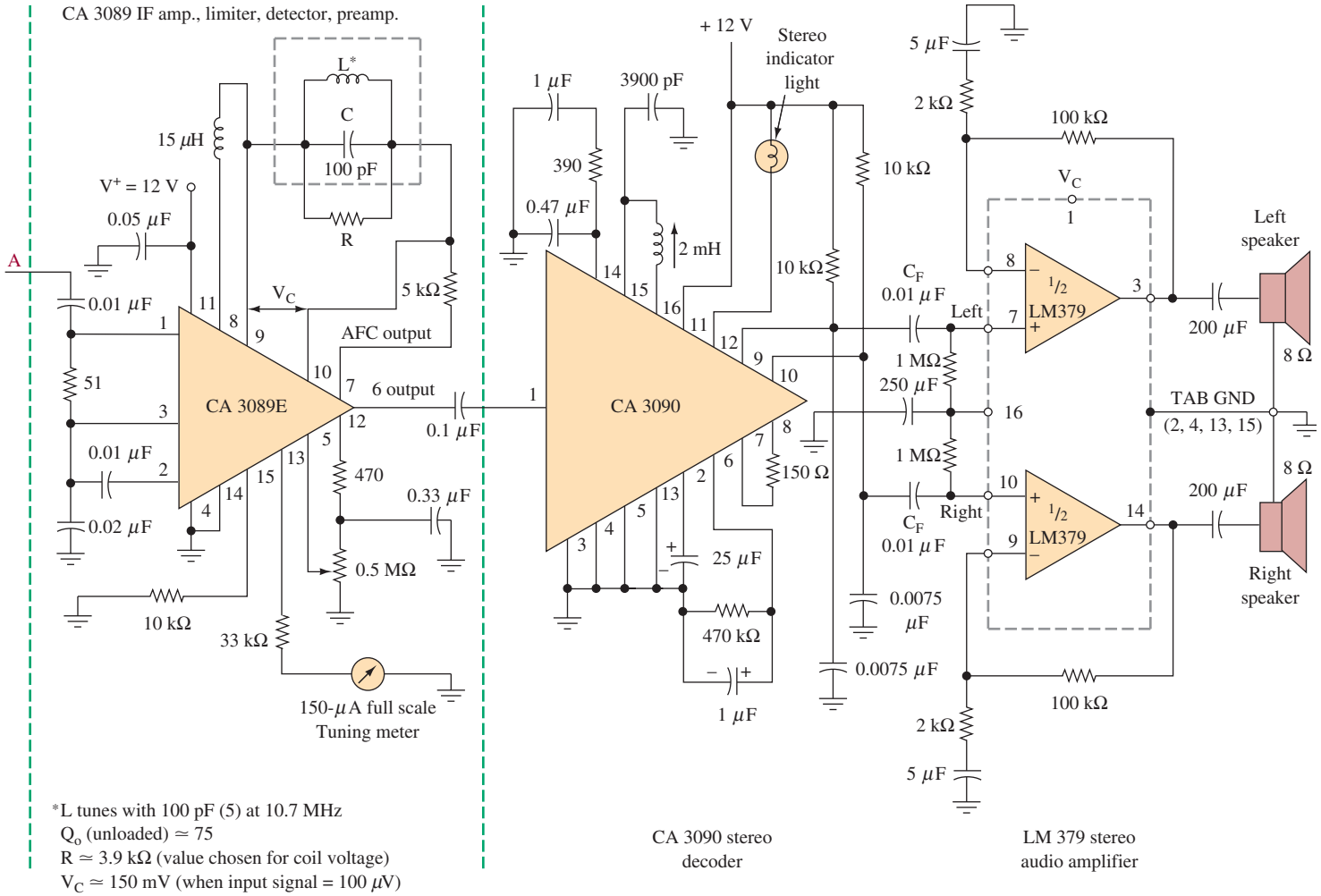


FIGURE 21 *(Continued)*

MOSFET receiver front ends offer superior cross-modulation and intermodulation performance as compared to other types, as explained in Section 2. The Institute of High Fidelity Manufacturers (IHFM) sensitivity for this front end is about 1.75 $\mu$V. It is defined as the minimum 100 percent modulated input signal that reduces the total receiver noise and distortion to 30 dB below the output signal. In other words, a 1.75-$\mu$V input signal produces 30-dB quieting.

The front-end output through $T_1$ in Figure 21 is applied to a CA3089 IC. The CA3089 provides three stages of IF amplification—limiting, demodulation, and audio preamplification. It provides demodulation with an analog quadrature detector circuit (Section 4). It also provides a signal to drive a tuning meter and an AFC output for direct control of a varactor tuner. Its audio output includes the 30-Hz to 15-kHz (L + R) signal, 19-kHz pilot carrier, and 23- to 53-kHz (L − R) signal, which are then applied to the FM stereo decoder IC, the CA3090. The CA3090 was explained in Section 6 and provides the separate left and right channel outputs as well as a signal to light a stereo indicator light.

The CA3090 audio outputs are then applied to a ganged volume control potentiometer (not shown) and then to an LM379 dual 6-W audio amplifier. It has two separate audio amplifiers in one 16-lead IC and has a minimum input impedance of 2 MΩ per channel. It typically provides a voltage gain of 34 dB, total harmonic distortion (THD) of 0.07 percent at 1-W output, and 70 dB of channel separation.



## 8 Troubleshooting

The basic approach to troubleshooting the FM receiver is similar to that of an AM receiver. The FM radio is a superheterodyne receiver like the AM receiver with a few differences. The methods you learn in this section will teach you how to isolate defects in the FM receiver.

After completing this section you should be able to

- Identify defective stages in an FM receiver
- Describe test setups for checking each receiver stage
- Troubleshoot a quadrature detector
- Test a semiconductor diode junction

### The FM Receiver

Figure 22 represents a typical FM radio receiver. Troubleshooting begins at the limiter stage. Feed in a test signal at the input of the limiter stage, point A in Figure 22. Based on the results of this test, the signal injection point will move toward the antenna or toward the audio section. We will assume, for the sake of this discussion, that the trouble complaint is a dead broadcast band FM receiver and the power supply is good. The signal generator used for this procedure must be capable of producing a test signal at the operating frequencies of the FM receiver and at its IF. In addition, an audio signal is needed to modulate the FM test signal.

### Locating a Defective Stage

Feed a modulated test signal at 10.7 MHz (the FM receiver's IF frequency) into the limiter stage. Use a 400- to 1000-Hz signal as the modulating signal. Set the output

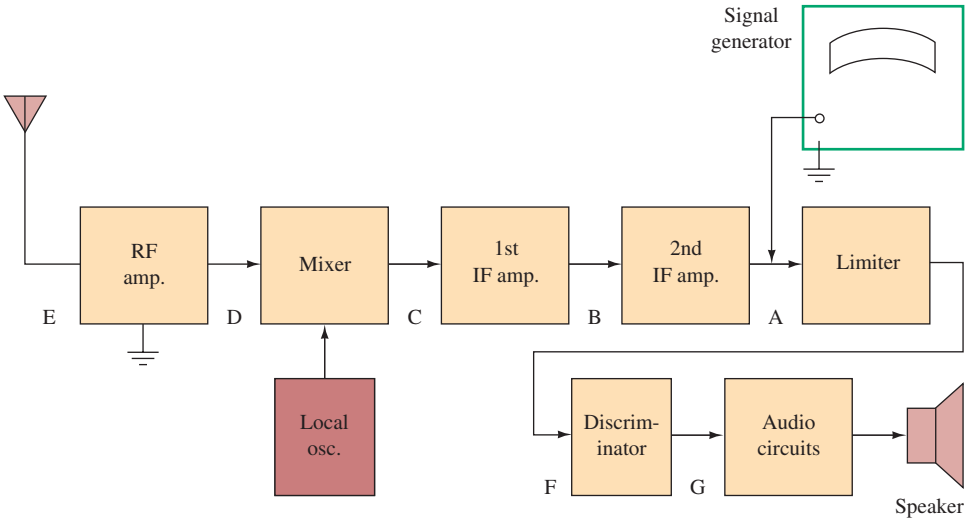


FIGURE 22 Typical FM receiver.

signal amplitude of the signal generator to approximately 4 V peak-to-peak (consult the service literature for the exact signal levels to inject for each stage being checked). Wobble the frequency control to each side of the IF center frequency of 10.7 MHz (see Figure 23). If the limiter, discriminator, and audio amplifier circuits are operating correctly, then the wobbled signal will be heard at the speaker as a sound that goes from loud to low as the dial is changed on and off the IF frequency.

With the limiter, discriminator, and audio circuits working properly, move the injected signal to the input of the last IF amplifier, point B in Figure 22. Lower the signal in amplitude and feed it into the base of the IF transistor circuit. For IF circuits composed of IC chips, connect the test signal to the proper input pin on the IC. Consult the service literature for proper signal input points and signal strength. Failure to hear the tone indicates that the IF stage being tested is bad. If the tone is heard at the speaker output, then move the test signal to point C. Continue in this fashion until the defective stage is located. The stage where the test tone is no longer heard is the defective circuit.

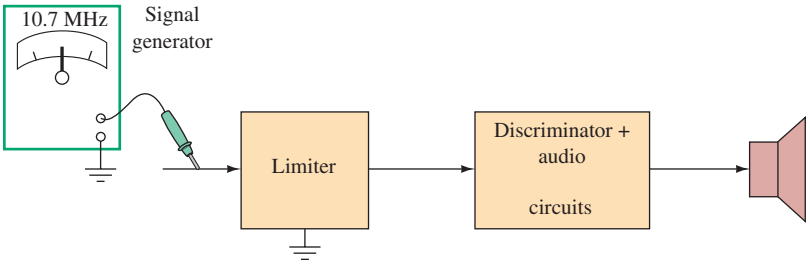


FIGURE 23 Testing by wobbling the signal.

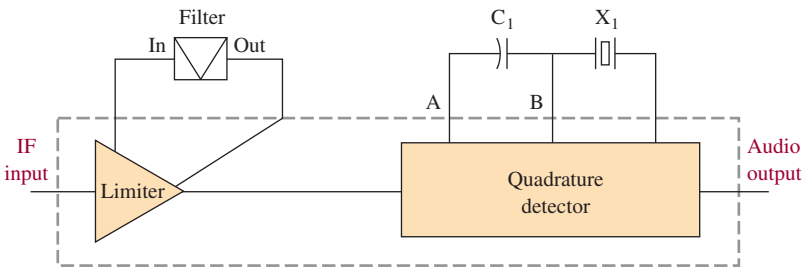


FIGURE 24 Quadrature detector.

## Quadrature Detectors

Many FM receivers use quadrature detectors because no adjustment is required if the IF is aligned to the detector. If quadrature detectors are found in a communications receiver, they will usually be operated at 455 kHz, and if they appear in a television receiver, the frequency will be 4.5 MHz. The quadrature detector is usually included in an integrated circuit that combines the IF amplifier and the demodulator (see Figure 24). Although the quadrature detector is usually a narrowband device, some home broadcast receivers use them at 10.7 MHz. In that case, C1 might actually be an inductor.

The crystal-like component $X_1$ is not a quartz crystal. It will be either a ceramic resonator or an *LC* tuned circuit. The filter will probably be a ceramic type, too. Remember, in a communications receiver this type of IF system usually runs at 455 kHz, so an oscilloscope can be used to measure all voltages. The IF input will be less than 1 mV and will be difficult to see. Recovered audio should be around 0.25 V.

A modulated signal generator can be used to provide a test signal. These are narrowband circuits, so the modulating signal should be about 1 kHz and the deviation set to 5 kHz.

First look for the IF signal at the filter's input and output. An RF voltmeter such as the Boonton 91D (an old model but still around) may be necessary because the voltage will be in the order of millivolts. The signal at the filter output will be about one-half the input. Sweep the signal generator $\pm$ 20 kHz from the center frequency and verify that the filter attenuates signals more than 7.5 kHz from the center frequency.

At the center frequency, the voltage at point B should be 90° out of phase with the voltage at point A. This can be observed with your oscilloscope. If you have a single-channel oscilloscope, connect point A to the external sync. Note the position of the trace when looking at point A. The voltage at point B should be delayed from A by one-quarter of a sine wave.

If you do not have an oscilloscope, you can at least observe a peak in the voltage at point B when the signal generator is tuned to center frequency.

Typical problems are:

1. C1 is open or its value has changed. This can cause no output or distorted audio output.
2. Improper alignment. The center frequency of the IF amplifier must be the same as the tuned circuit, X1. One or both may be adjustable. Look for open coils or capacitors that have changed value.
3. Quadrature detectors sometimes have a resistor in the tuned circuit to lower the *Q*. If the resistor is missing or open, the *Q* will be too high, causing distorted audio.



The Agilent U1600A Series Handheld Oscilloscopes. (© Agilent Technologies, Inc. 2007 Reproduced with Permission, Courtesy of Agilent Technologies, Inc.)

## Discriminators

Foster–Seely discriminators or ratio detectors (Figures 7 and 9) are used in older FM receivers. These circuits may drift out of alignment over time and coils or capacitors may short or open. All cause distorted or no audio. Alignment is best done with a sweep generator, but in a pinch apply a fully modulated signal to the receiver and adjust the tuning for minimum distortion.

## Stereo Demodulator

When troubleshooting a stereo demodulator (probably an IC), the first thing to look for is proper signal input level. An acceptable input is about 100-mV rms.

Make sure the 76-kHz oscillator is present and on frequency. Look for an open tuning capacitor or inductor if the oscillator is not running or cannot be properly adjusted. Check dc voltages on bypass capacitors. If these capacitors leak, the internal IC bias will be wrong and the IC will not work.

## Testing Diodes and Transistors

To test a diode that you suspect is defective, set your DMM to the diode test function, as shown in Figure 25. The procedure for testing diodes and transistors is illustrated in Figures 26(a) and (b). With the DMM in the diode test position, make a reading, then switch the test leads to the opposite ends of the diode and make another reading. Judge the diode based on the following criteria: If one reading shows a value and the other reading shows over range, then the device is good. If both readings result in over range, the device is open. If the two readings are zero or very low, the device is shorted. Refer to Table 1 for typical readings. The first and second readings may be in reverse order.

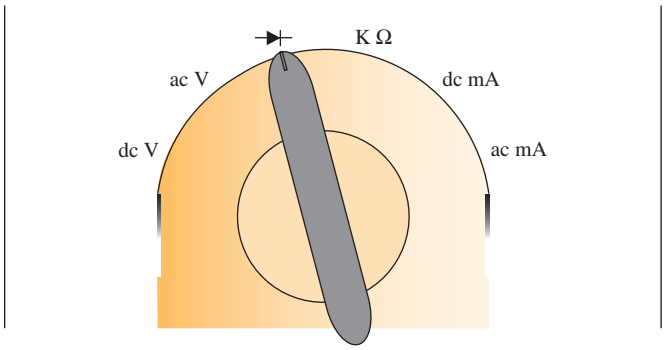


FIGURE 25 Diode test range.

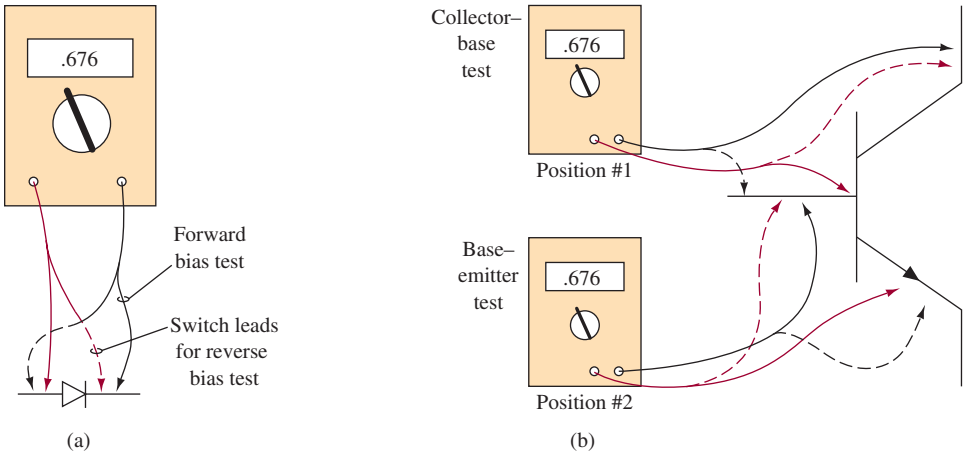


FIGURE 26 Diode and transistor testing.

Testing the transistor is very similar to testing the diode if we think of the transistor as two diodes back-to-back. The transistor's collector–base junction is tested as if it were one diode, and the base–emitter junction is tested as another diode, shown in Figure 26(b). Apply the DMM's test leads across the transistor's collector and base connections and make the first reading. Reverse the test leads and make the second reading. Compare your results to the readings in Table 1. Next, apply the DMM's test leads to the transistor's base and emitter connections. Make the first reading, then reverse the test leads and make the second reading. Compare the results to the readings in Table 1. Good readings should be fairly close to those

**Table 1** Displayed Values for a Diode Test

| First Reading | Second Reading | Conclusion |
|---|---|---|
| Approximately 0.4 V | Over range | Good germanium type |
| Approximately 0.6 V | Over range | Good silicon type |
| Over range | Over range | Device is open |
| Very small or zero | Very small or zero | Device is shorted |

in the table. For example, if your readings were 0.676 V and over range, this would indicate a good semiconductor junction. Consult the booklet that came with your DMM for the particular values of readings you may get. Remember, two over-range readings or two small-value readings indicate a defective semiconductor junction.

## 9 TROUBLESHOOTING WITH ELECTRONICS WORKBENCH™ MULTISIM

This section gives you a more thorough understanding of the functional blocks within an FM receiver and additional experience troubleshooting electronic communications circuits. Open the file **Fig6-27** at www.pearsoned.com/electronics. This is an implementation of an FM receiver using Multisim. Each of the building blocks for the FM receiver is identifed. A picture of the Multisim circuit is provided in Figure 27.

A 100-kHz FM signal is being generated by the FM source. The FM carrier is being modulated by a 1-kHz signal and the modulation index is 5. The voltage level has been set to 5 $\mu$V to simulate the RF input level that might be received.

The second stage is the RF amplifier, which has a gain of 20,000 V/V. The huge gain is required to provide enough signal voltage for the next stage. The mixer stage follows the RF amplifier and is used to down-convert the 100-kHz frequency to 10 kHz, which is the IF frequency for this circuit. The local oscillator frequency has been set to 110 kHz. The outputs of the mixer are 10 kHz and 210 kHz, which are the difference and sum of the input and local oscillator frequencies. The next stage is the IF amplifier, which includes a bandpass filter that passes the 10-kHz difference and rejects the 210-kHz sum. $C_1$ and $L_1$ are used to create the bandpass filter. You can view the Bode plot of the bandpass filter by opening

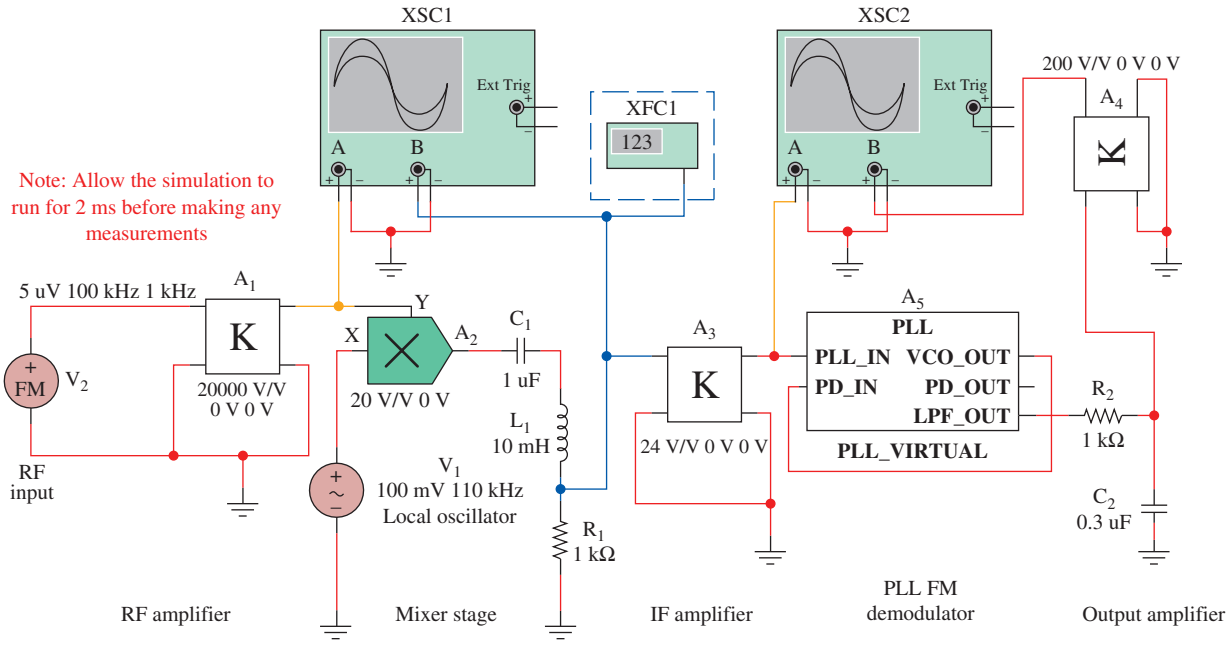


FIGURE 27 An implementation of an FM receiver using Multisim.

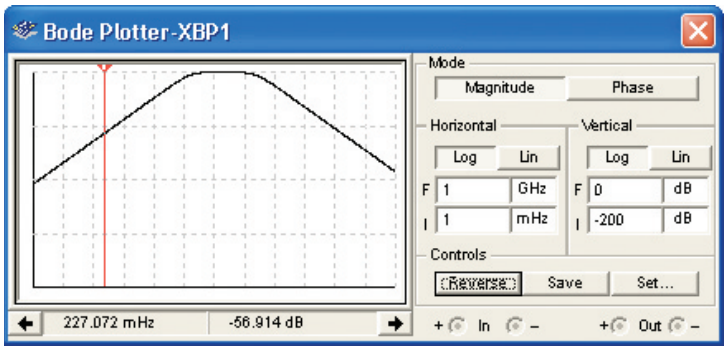


FIGURE 28 The frequency plot of the bandpass filter.

the file **FigE6-1** at www.pearsoned.com/electronics. Start the simulation and open the Bode plotter. You should see a plot similar to the file shown in Figure 28.

This filter provides a 3-dB bandpass of 140 Hz to 22 kHz. The 210-kHz signal is approximately 80 dB down. You can verify this by sliding the cursor along the frequency plot response of the bandpass filter. The frequency and corresponding dB value is shown at the bottom of the Bode plotter window. Close the Bode plot file and reopen the **Fig6-27** file.

The output of the bandpass filter is next amplified within the IF amplifier with a gain of 50 V/V. The output of the IF amplifier connects to the PLL FM demodulator. The PLL has been set up to lock to the 10-kHz frequency-modulated signal. The output of the PLL FM demodulator circuit is taken from $V_{out}$, which is the error voltage output for the PLL. This output is amplified by the output amplifier stage, which has a gain of 100 V/V.

Start the simulation and observe the output. You will notice that a 1-kHz sinusoid is produced, which is the original modulating signal. This simulation may be a little slow and you must let the simulation run for a short time for the circuit to stabilize. Become familiar with this circuit; you will next be asked to troubleshoot a faulty version of it.

Open the file **FigE6-2** at www.pearsoned.com/electronics. Start the simulation and observe the output on the oscilloscope. Use your oscilloscope to follow the signal through the circuit. You will find that resistor R2, which connects the output of the PLL to the output amplifier, is open. Double-click on the resistor, R2, and correct the fault by clicking on the **fault** tab and resetting the fault to none. Rerun the simulation to verify that the problem has been corrected.

## Electronics Workbench™ Exercises

1. Open the **FigE6-3** file at www.pearsoned.com/electronics. Start the simulation and determine if the circuit is working properly. If it is not working, troubleshoot the circuit and correct the fault(s). Explain your findings.
2. Open the **FigE6-4** file at www.pearsoned.com/electronics. Start the simulation and observe the output signals. Explain how the circuit limits the output level to $\pm 5$ V.
3. Open the **FigE6-5** file at www.pearsoned.com/electronics. Describe the purpose of this circuit block in an FM receiver. What is the expected output frequency of the mixer? Verify that the correct frequency is being output by using the trigonometric identity $(\sin A)(\sin B) = 0.5 \cos(A - B) - 0.5 \cos(A + B)$.



## Summary

In this chapter we discussed the basis of an FM receiver and showed the similarities and differences compared to an AM receiver. The major topics you should now understand include the following:

- the operation of an FM receiver using a block diagram as a guide, including complete descriptions of the discriminator, the deemphasis network, and the limiter functioning as AGC
- the benefits of RF amplifiers, including image frequency attenuation and local oscillator reradiation effects
- the detailed functioning of a transistor limiter circuit
- the description and comparison of slope detector, Foster–Seely discriminator, ratio detector, and quadrature detector circuits
- the description and operation of a phase-locked-loop (PLL) FM demodulator, including its three possible states
- the analysis of a stereo FM demodulation process using a block diagram
- the operation of the subsidiary communication authorization (SCA) decoder operation
- the operation of a complete 88–108-MHz stereo FM receiver by analysis of the schematic

## Questions and Problems

### Section 1

*1. What is the purpose of a discriminator in an FM broadcast receiver?
2. Explain why the automatic frequency control (AFC) function is usually not necessary in today's FM receivers.
*3. Draw a block diagram of a superheterodyne receiver designed for reception of FM signals.
4. The local FM stereo rock station is at 96.5 MHz. Calculate the local oscillator frequency and the image frequency for a 10.7-MHz IF receiver. (107.2 MHz, 117.9 MHz)

### Section 2

5. Explain the desirability of an RF amplifier stage in FM receivers as compared to AM receivers. Why is this not generally true at frequencies over 1 GHz?
6. Describe the meaning of *local oscillator reradiation,* and explain how an RF stage helps to prevent it.
7. Why is a square-law device preferred over other devices as elements in an RF amplifier?
8. Why are FETs preferred over other devices as the active elements for RF amplifiers?

* An asterisk preceding a number indicates a question that has been provided by the FCC as a study aid for licensing examinations.

9. List two advantages of using a dual-gate MOSFET over a JFET in RF amplifiers.
10. Explain the need for the radio-frequency choke (RFC) in the RF amplifier shown in Figure 2.

## Section 3

*11. What is the purpose of a limiter stage in an FM broadcast receiver?
*12. Draw a diagram of a limiter stage in an FM broadcast receiver.
13. Explain fully the circuit operation of the limiter shown in Figure 3.
14. What is the relationship among limiting, sensitivity, and quieting for an FM receiver?
15. An FM receiver provides 100 dB of voltage gain prior to the limiter. Calculate the receiver's sensitivity if the limiter's quieting voltage is 300 mV. (3 $\mu$V)

## Section 4

16. Draw a schematic of an FM slope detector and explain its operation. Why is this method not often used in practice?
17. Draw a schematic of a Foster–Seely discriminator, and provide a step-by-step explanation of what happens when the input frequency is below the carrier frequency. Include a phase diagram in your explanation.
*18. Draw a diagram of an FM broadcast receiver detector circuit.
*19. Draw a diagram of a ratio detector and explain its operation.
20. Explain the relative merits of the Foster–Seely and ratio detector circuits.
*21. Draw a schematic diagram of each of the following stages of a superheterodyne FM receiver:
    (a) Mixer with injected oscillator frequency.
    (b) IF amplifier.
    (c) Limiter.
    (d) Discriminator.
    Explain the principles of operation. Label adjacent stages.
22. Describe the process of quadrature detection.

## Section 5

23. Draw a block diagram of a phase-locked loop (PLL) and briefly explain its operation.
24. Explain in detail how a PLL is used as an FM demodulator.
25. List the three possible states of operation for a PLL and explain each one.
26. A PLL's VCO free-runs at 7 MHz. The VCO does not change frequency until the input is within 20 kHz of 7 MHz. After that condition, the VCO follows the input to $\pm$150 kHz of 7 MHz before the VCO starts to free-run again. Determine the PLL's lock and capture ranges. (300 kHz, 40 kHz)

## Section 6

27. Explain how separate left and right channels are obtained from the (L + R) and (L − R) signals.
*28. What is SCA? What are some possible uses of SCA?
29. Determine the maximum reproduced audio signal frequency in an SCA system. Why does SCA cause less FM carrier deviation, and why is it thus less noise resistant than standard FM? (*Hint:* Refer to Figure 17.) (7.5 kHz)
30. Explain the principle of operation for the CA3090 stereo decoder.



## Section 7

31. The receiver front end in Figure 21 is rated to have noise below the signal by 30 dB in the output with a 1.75-$\mu$V input. Calculate its output *S*/*N* ratio with a 1.75-$\mu$V input signal. (31.6 to 1)
32. The LIC dual audio amplifiers in Figure 21 are rated to provide 70 dB of channel separation. If the left channel has 1 W of output power, calculate the wattage of the right channel that is included. (0.1 $\mu$W)

## Section 8

33. Explain why you would wobble the IF signal fed into point A of Figure 22.
34. The quadrature detector troubleshooting circuit shown in Figure 24 includes a device labeled $X_1$. Explain the various options for circuitry at that point.
35. Describe the method for checking a diode with a DMM. Extend that description into a technique for testing a transistor.
36. Describe the operation of the quadrature detector in Figure 24 if $C_1$ is shorted.
37. Describe possible causes if the Foster–Seely discriminator of Figure 7 has a peak output voltage much less than calculated.
38. If $L_2$ is shorted in Figure 7, explain what happens to the output voltage.
39. Describe the demodulated signal of Figure 11 if $C_3$ is shorted.
40. Explain how a low beta (<40) on $Q_4$ in Figure 11 would affect the circuit's performance.

## Questions for Critical Thinking

41. If you were concerned with the sensitivity rating of a communications system, would noise reduction capability be a major factor in your decision-making? Why or why not?
42. Explain why a limiter minimizes or eliminates the need for the AGC function.
43. Draw a schematic of the LM 565 PLL in Figure 14 if it is used as an FM demodulator. Pick $C_o$ and $R_o$ so that the free-running frequency is 455 kHz.
44. Draw a block diagram of an FM stereo demodulator. Explain the function of the AM demodulator and the matrix network so nontechnical users can understand. Add a circuit that energizes a light to indicate reception of a stereo station.

# COMMUNICATIONS TECHNIQUES

From *Modern Electronic Communication*, Ninth Edition, Jeffrey S. Beasley, Gary M. Miller. Copyright © 2008 by Pearson Education, Inc. Published by Prentice Hall. All rights reserved.

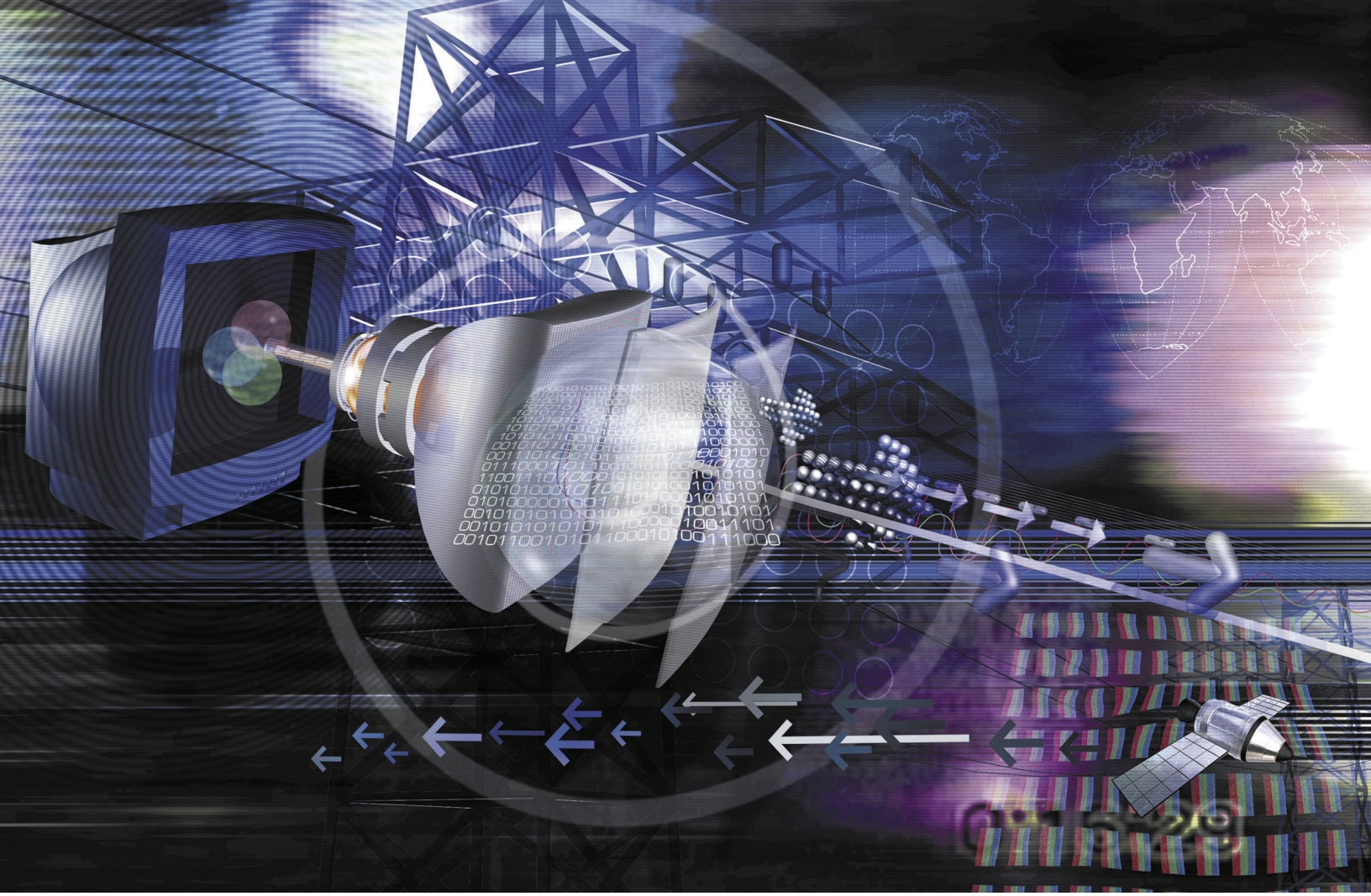

## Chapter Outline

1 Introduction
2 Frequency Conversion
3 Special Techniques
4 Receiver Noise, Sensitivity, and Dynamic Range Relationships
5 Frequency Synthesis
6 Direct Digital Synthesis
7 High Frequency Communication Modules
8 Troubleshooting
9 Troubleshooting with Electronics Workbench™ Multisim

## Objectives

- Describe double conversion and up-conversion and explain their advantages
- Analyze the advantages of delayed AGC and auxiliary AGC
- Explain the features and their operation that a high-quality receiver may include as compared to a basic receiver
- Analyze and explain the relationships among noise, receiver sensitivity, dynamic range, and the third-order intercept
- Troubleshoot an amplifier suspected of excessive IMD
- Explain the operation of a frequency synthesizer
- Describe the operation of a DDS system and provide advantages and drawbacks compared to analog synthesizers
- Explain how the performance of electronic communication circuitry is affected at high frequencies

# COMMUNICATIONS TECHNIQUES




CB transceiver. (Courtesy of Cobra Electronics/Golin Harris. Reprinted with permission.)

## Key Terms

transceiver
double conversion
up-conversion
preselector
delayed AGC
variable bandwidth tuning
electromagnetic interference
S meter
muting
quieting
noise floor
dynamic range
intermod
third-order intercept point
input intercept
error voltage
direct digital synthesis
phase noise
parasitic
conversion loss

# 1 Introduction

**Transceiver**
transmitter and receiver sharing a single package and some circuits

Communications equipment may be loosely defined as that which is *not* used for entertainment. Because much of this equipment is of a vital nature, it is not surprising that communications equipment contains more sophistication than a standard broadcast receiver. In addition, because communication tends to require two-way capabilities, the use of transceivers is prevalent. A **transceiver** is simply a transmitter *and* receiver in a single package. Besides sharing a single package, some circuits are used for both the transmitter and receiver functions. Some examples of shared functions include oscillators, power supplies, and audio amplifiers.

Many individuals experience the enjoyment of transceiver contact around the world as radio amateurs. These hams also get into the technology of transceivers. In the early 1980s they developed the first crude model of the Internet. For more information on amateur radio, contact:

American Radio Relay League
225 Main Street
Newington, CT 06111
1-860-594-0200
www.arrl.org

# 2 Frequency Conversion

## Double Conversion

One of the most likely areas of change from broadcast receivers to communications receivers is in the mixing process. The two major differences are the widespread use of *double conversion* and the increasing popularity of *up-conversion* in communications equipment. Both of these refinements have as a major goal the minimization of image frequency problems.

**Double Conversion**
superheterodyne receiver design with two separate mixers, local oscillators, and intermediate frequencies

**Double conversion** is the process of stepping down the RF signal to a first, relatively high IF frequency and then mixing down again to a second, lower, final IF frequency. Figure 1 provides a block diagram for a typical double-conversion system.

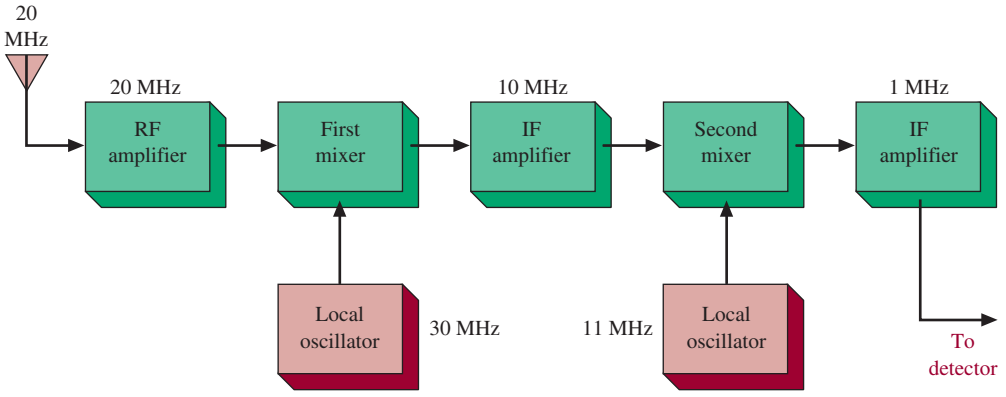


FIGURE 1 Double-conversion block diagram.

Notice that the first local oscillator is variable to allow a constant 10-MHz frequency for the first IF amplifier. Now the input into the second mixer is a constant 10 MHz, which allows the second local oscillator to be a fixed 11-MHz crystal oscillator. The difference component (11 MHz − 10 MHz = 1 MHz) out of the second mixer is accepted by the second IF amplifier, which is operating at 1 MHz. The following example illustrates the ability of double conversion to eliminate image frequency problems. Example 1 shows that in this case the image frequency is double the desired signal (40 MHz versus 20 MHz), and even the relatively broadband tuned circuits of the RF and mixer stages will almost totally suppress the image frequency. On the other hand, if this receiver uses a single conversion directly to the final l-MHz IF frequency, it is found that the image frequency will not be fully suppressed.

## Example 1

*Determine the image frequency for the receiver illustrated in Figure 1.*

### Solution

The image frequency is the one that, when mixed with the 30-MHz first local oscillator signal, will produce a first mixer output frequency of 10 MHz. The desired frequency of 20 MHz mixed with 30 MHz yields a 10-MHz component, of course, but what *other* frequency provides a 10-MHz output? A little thought shows that if a 40-MHz input signal mixes with a 30-MHz local oscillator signal, an output of 40 MHz − 30 MHz = 10 MHz is also produced. Thus, the image frequency is 40 MHz.

The 22-MHz image frequency of Example 2 is very close to the desired 20-MHz signal. The RF and mixer tuned circuits will certainly provide attenuation to the 22-MHz image, but if it is a strong signal, it will certainly get into the IF stages and will not be removed from that point on. The graph of RF and mixer tuned circuit response in Figure 2 serves to illustrate the tremendous image frequency response rejection provided by the double-conversion scheme.

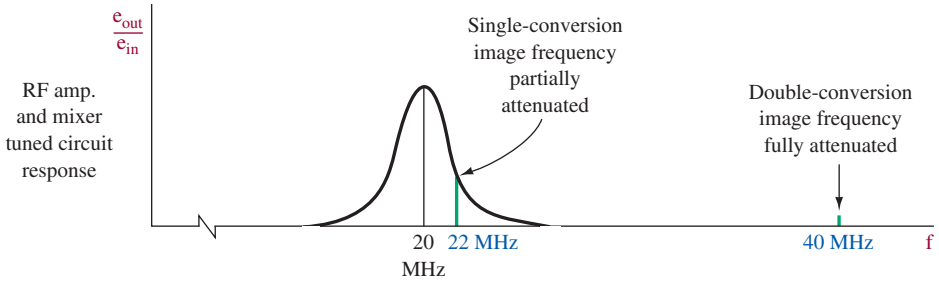


FIGURE 2 Image frequency rejection.

## Example 2

*Determine the image frequency for the receiver illustrated in Figure 3.*

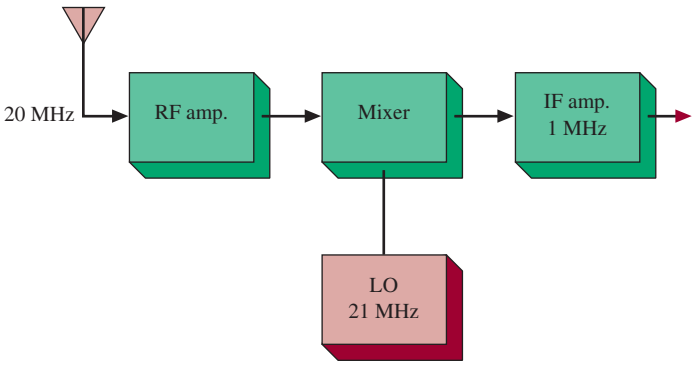


FIGURE 3 System for Example 2.

### Solution

If a 22-MHz signal mixes with the 21-MHz local oscillator, a difference component of 1 MHz is produced just as when the desired 20-MHz signal mixes with 21 MHz. Thus, the image frequency is 22 MHz.

Image frequencies are not a major problem for low-frequency carriers, say, for frequencies below 4 MHz. For example, a single-conversion setup for a 4-MHz carrier and a 1-MHz IF means that a 5-MHz local oscillator will be used. The image frequency is 6 MHz, which is far enough away from the 4-MHz carrier that it won't present a problem. At higher frequencies, where images are a problem, the situation is aggravated by the enormous number of transmissions taking place in our crowded communications bands.

## Example 3

*Why do you suppose that images tend to be somewhat less of a problem in FM versus AM or SSB communications?*

### Solution

Recall the concept of the *capture* effect in FM systems. If a desired and undesired station are picked up simultaneously, the stronger one tends to be "captured" by inherent suppression of the weaker signal. Thus, a 2:1 signal-to-undesired-signal ratio may result in a 10:1 ratio at the output. This contrasts with AM systems (SSB included), where the 2:1 ratio is carried through to the output.

## Up-Conversion

Until recently, the double-conversion scheme, with the lower IF frequency (often the familiar 455 kHz) providing most of the receiver's selectivity, has been standard practice because the components available made it easy to achieve the necessary selectivity at low IF frequencies. However, now that VHF crystal filters (30 to 120 MHz) are available for IF circuitry, conversion to a higher IF than RF frequency is popular in sophisticated communications receivers. As an example, consider a receiver tuned to a

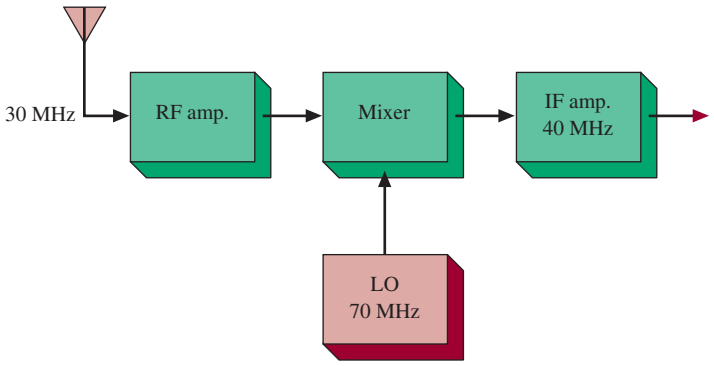


FIGURE 4 Up-conversion system.

30-MHz station and using a 40-MHz IF frequency, as illustrated in Figure 4. This represents an **up-conversion** system because the IF is a higher frequency than the received signal. The 70-MHz local oscillator mixes with the 30-MHz signal to produce the desired 40-MHz IF. Sufficient IF selectivity at 40 MHz is possible with a crystal filter.

**Up-Conversion**
mixing the received RF signal with an LO signal to produce an IF signal higher in frequency than the original RF signal

### Example 4

*Determine the image frequency for the system of Figure 4.*

#### Solution

If a 110-MHz signal mixes with the 70-MHz local oscillator, a 40-MHz output component results. The image frequency is therefore 110 MHz.

Example 4 shows the superiority of up-conversion. It is highly unlikely that the 110-MHz image could get through the RF amplifier tuned to 30 MHz. There is no need for double conversion and all its necessary extra circuitry. The only disadvantage to up-conversion is the need for a higher-$Q$ IF filter and better high-frequency response IF transistors. The current state-of-the-art in these areas now makes up-conversion economically attractive. Additional advantages over double conversion include better image suppression and less tuning range requirements for the oscillator. The smaller tuning range for up-conversion is illustrated in the following example and minimizes the tracking difficulties of a widely variable local oscillator.

### Example 5

*Determine the local oscillator tuning range for the systems illustrated in Figures 1 and 4 if the receivers must tune from 20 to 30 MHz.*

#### Solution

The double-conversion local oscillator in Figure 1 is at 30 MHz for a received 20-MHz signal. Providing the same 10-MHz IF frequency for a 30-MHz signal means that the local oscillator must be at 40 MHz. Its tuning range is from 30 to 40 MHz or 40 MHz/30 MHz = 1.33. The up-conversion scheme of Figure 4 has a 70-MHz local oscillator for a 30-MHz input and requires a 60-MHz oscillator for a 20-MHz input. Its tuning ratio is then 70 MHz/60 MHz, or a very low 1.17.

**Preselector**
the tuned circuits prior to the mixer in a superheterodyne receiver

The tuned circuit(s) prior to the mixer is often referred to as the **preselector.** The preselector is responsible for the image frequency rejection characteristics of the receiver. If an image frequency rejection is the result of a single tuned circuit of known $Q$, the amount of image frequency rejection can be calculated. The following equation predicts the amount of suppression in dB. If suppression is due to more than a single tuned circuit, the dB of suppression for each is calculated individually and the results added to provide the total suppression:

$$\text{image rejection (dB)} \cong 20 \log\left[\left(\frac{f_i}{f_s} - \frac{f_s}{f_i}\right)Q\right] \quad \textbf{(1)}$$

where $f_i$ = image frequency
$f_s$ = desired signal frequency
$Q$ = tuned circuit's $Q$

**Example 6**

*An AM broadcast receiver has two identical tuned circuits prior to the IF stage. The Q of these circuits is 60 and the IF frequency is 455 kHz, and the receiver is tuned to a station at 680 kHz. Calculate the amount of image frequency rejection.*

**Solution**

Using Equation (1), the amount of image frequency rejection per stage is calculated:

$$\text{image rejection (dB)} \cong 20 \log\left[\left(\frac{f_i}{f_s} - \frac{f_s}{f_i}\right)Q\right] \quad \textbf{(1)}$$

The image frequency is 680 kHz + (2 × 455 kHz) = 1590 kHz. Thus,

$$20 \log\left[\left(\frac{1590 \text{ kHz}}{680 \text{ kHz}} - \frac{680 \text{ kHz}}{1590 \text{ kHz}}\right)60\right] = 20 \log 114.6$$
$$= 41 \text{ dB}$$

Thus, the total suppression is 41 dB plus 41 dB, or 82 dB. This is more than enough to provide excellent image frequency rejection.



## 3 Special Techniques

### Delayed AGC

**Delayed AGC**
an AGC that does not provide gain reduction until an arbitrary signal level is attained.

The simple automatic gain control (AGC) has a minor disadvantage. It provides some gain reduction even to very weak signals. This is illustrated in Figure 5. As soon as even a weak received signal is tuned, simple AGC provides some gain reduction. Because communications equipment is often dealing with marginal (weak) signals, it is usually advantageous to add some additional circuitry to provide a **delayed AGC,** that is, an AGC that does not provide any gain reduction until some arbitrary signal level is attained and therefore has no gain reduction for weak signals. This characteristic is also shown in Figure 5. It is important for you to understand that delayed AGC does not mean delayed in time.

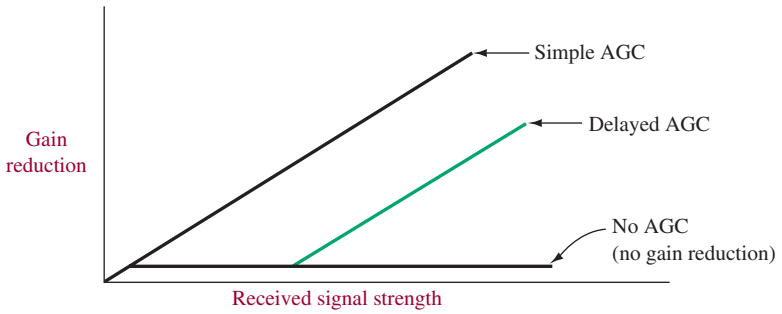


FIGURE 5 AGC characteristics.

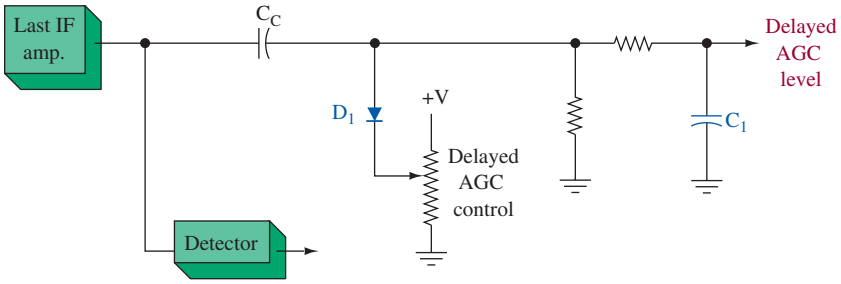


FIGURE 6 Delayed AGC configuration.

A simple means of providing delayed AGC is shown in Figure 6. A reverse bias is applied to the cathode of $D_1$. Thus, the diode looks like an open circuit to the ac signal from the last IF amplifier unless that signal reaches some predetermined instantaneous level. For small IF outputs when $D_1$ is open, the capacitor $C_1$ sees a pure ac signal, and thus no dc AGC level is sent back to previous stages to reduce their gain. If the IF output increases, eventually a point is reached where $D_1$ will conduct on its peak positive levels. This will effectively *short* out the positive peaks of IF output, and $C_1$ will therefore see a more negative than positive signal and filter it into a relatively constant negative level used to reduce the gain of previous stages. The amplitude of IF output required to start feedback of the "delayed" AGC signal is adjustable by the delayed AGC control potentiometer of Figure 6. This may be an external control so that the user can adjust the amount of delay to suit conditions. For instance, if mostly weak signals are being received, the control might be set so that no AGC signal is developed except for very strong stations. This means the delay interval shown in Figure 5 is increased.

## Auxiliary AGC

Auxiliary AGC is used (even on some broadcast receivers) to cause a step reduction in receiver gain at some arbitrarily high value of received signal. It then has the effect of preventing very strong signals from overloading a receiver and thereby causing a distorted, unintelligible output. A simple means of accomplishing the auxiliary AGC function is illustrated in Figure 7(a). Notice the auxiliary AGC diode connected between the collectors of the mixer and first IF transistors. Under normal signal conditions, the dc level at each collector is such that the diode is reverse-biased. In this

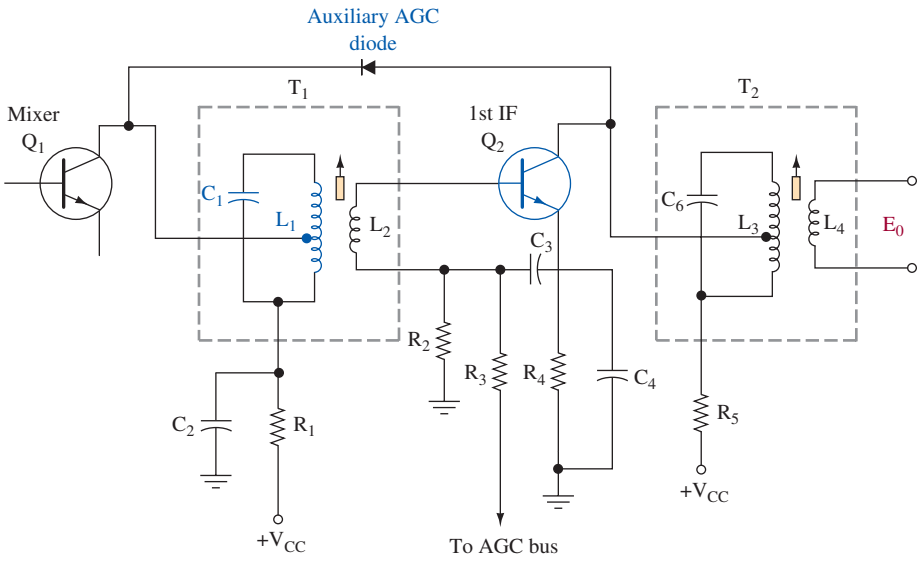


(a)

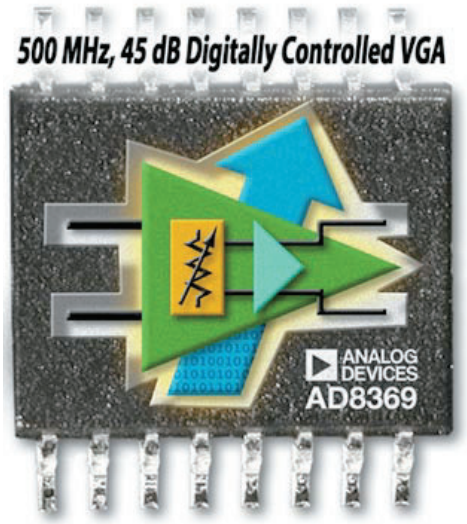


(b)

(*Continued*)

**FIGURE 7** (a) Auxiliary AGC; (b) the Analog Devices AD8369 variable gain amplifier IC;

condition the diode has a very high resistance and has no effect on circuit action. The potential at the mixer's collector is constant because it is not controlled by the normal AGC. However, the AGC control on the first IF transistor, for very strong signals, causes its dc base current to decrease, and hence the collector current also decreases. Thus, its collector voltage becomes more positive, and the diode starts to conduct. The diode resistance goes low, and it loads down the mixer tank ($L_1$ $C_1$) and thereby produces a step reduction of the signal coupled into the first IF stage. The dynamic AGC range has thereby been substantially increased.

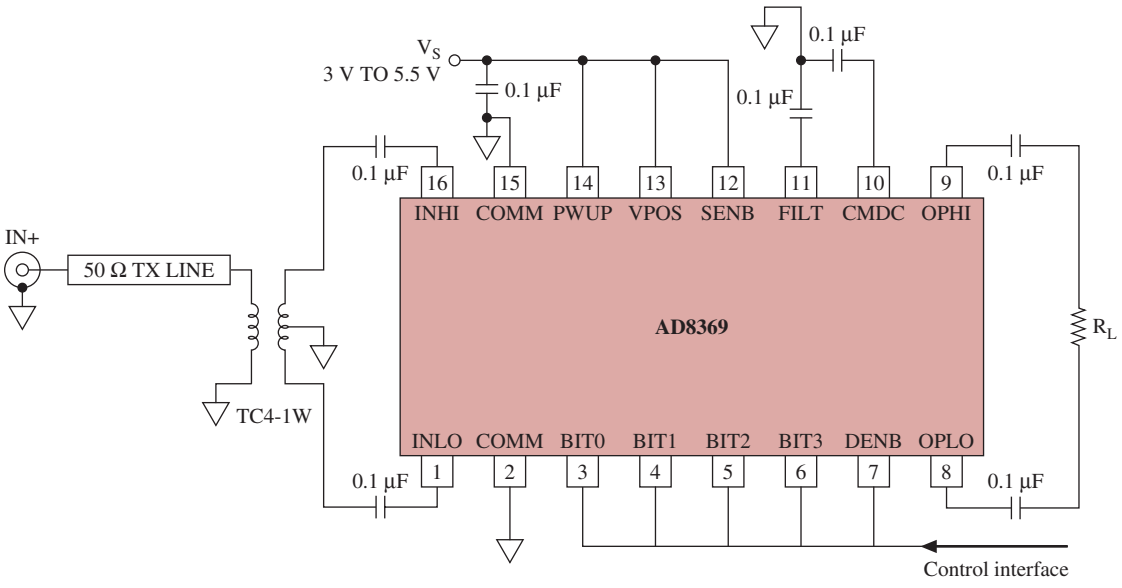


(c)

(*Continued*)

**FIGURE 7** (c) Basic connections.

An example of a modern digitally controlled variable gain amplifier, the Analog Devices AD8369, is shown in Figure 7(b). It provides a −5 dB to +40 dB digitally adjustable gain in 3-dB increments. The AD8369 is specified for use in RF receive-path AGC loops in cellular receivers. The minimum basic connections for the AD8369 are also shown in Figure 7(c). A balanced RF input connects to pins 16 and 1. Gain control of the device is provided via pins 3, 4, 5, 6, and 7. A 3 V to +5.5 V connects to pins 12, 13, and 14. The balanced differential output appears at pins 8 and 9.

## Variable Sensitivity

Despite the increased dynamic range provided by delayed AGC and auxiliary AGC, it is often advantageous for a receiver also to include a variable sensitivity control. This is a manual AGC control because the user controls the receiver gain (and thus sensitivity) to suit the requirement. A communications receiver may be called upon to deal with signals over a 100,000 : 1 ratio, and even the most advanced AGC system does not afford that amount of range. Receivers that are designed to provide high sensitivity and that can handle very large input signals incorporate a manual sensitivity control that controls the RF and/or IF gain.

## Variable Selectivity

Many communications receivers provide detection to more than one kind of transmission. They may detect code transmissions, SSB, AM, and FM all in one receiver. The required bandwidth to avoid picking up adjacent channels may well vary from 1 kHz for code up to 30 kHz for narrowband FM.

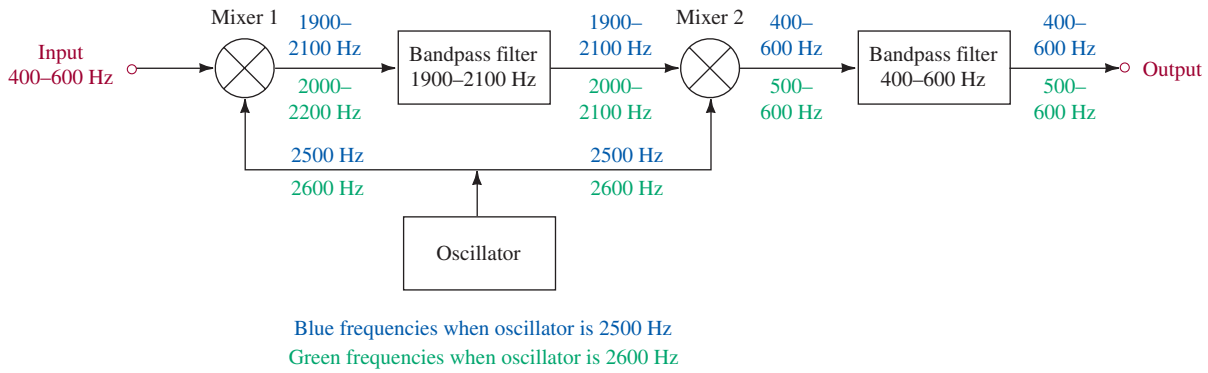


FIGURE 8 Variable bandwidth tuning (VBT).

**Variable Bandwidth Tuning**
technique to obtain variable selectivity to accommodate reception of variable bandwidth signals

Most modern receivers use a technique called **variable bandwidth tuning** (VBT) to obtain variable selectivity. Consider the block diagram shown in Figure 8. The input signal at 500 Hz has half-power frequencies at 400 and 600 Hz, a 200-Hz bandwidth. This is mixed with a 2500-Hz local oscillator output to develop signals from 1900 to 2100 Hz. These drive the bandpass filter, which passes signals from 1900 to 2100 Hz. The filter output is mixed with the LO output producing signals from 400 to 600 Hz. These are fed to another bandpass filter, which passes signals between 400 and 600 Hz. The system output, therefore, is the original 400- to 600-Hz range with the original bandwidth of 200 Hz.

Keeping the same 500-Hz input signal, let us now increase the LO frequency to 2600 Hz. The first mixer output now covers the range from 2000 to 2200 Hz, but only that portion from 2000 to 2100 Hz is passed by the first BPF. These are mixed to produce signals from 500 to 600 Hz, which are passed by the second BPF. The output bandwidth has been reduced to 100 Hz. Increase the LO to 2650 Hz and the system bandwidth drops to 50 Hz. In other words, the bandwidth is now a function of the variable LO frequency.

## Noise Limiter

**Electromagnetic Interference**
unwanted signals produced by devices that produce excessive electromagnetic radiation

Manufactured sources of external noise are extremely troublesome to highly sensitive communications receivers as well as to any other electronics equipment that is dealing with signals in the microvolt region or less. The interference created by these human-made sources, such as ignition systems, motor communications systems, and switching of high current loads, is a form of **electromagnetic interference** (EMI). Reception of EMI by a receiver creates undesired amplitude modulation, sometimes of such large magnitude as to affect FM reception adversely, to say nothing of the complete havoc created in AM systems. While these noise impulses are usually of short duration, it is not uncommon for them to have amplitudes up to 1000 times that of the desired signal. A noise limiter circuit is employed to silence the receiver for the duration of a noise pulse, which is preferable to a very loud crash from the speaker. These circuits are sometimes referred to as automatic noise limiter (ANL) circuits.

A common type of circuit for providing noise limiting is shown in Figure 9. It uses a diode, $D_2$, that conducts the detected signal to the audio amplifier as long as

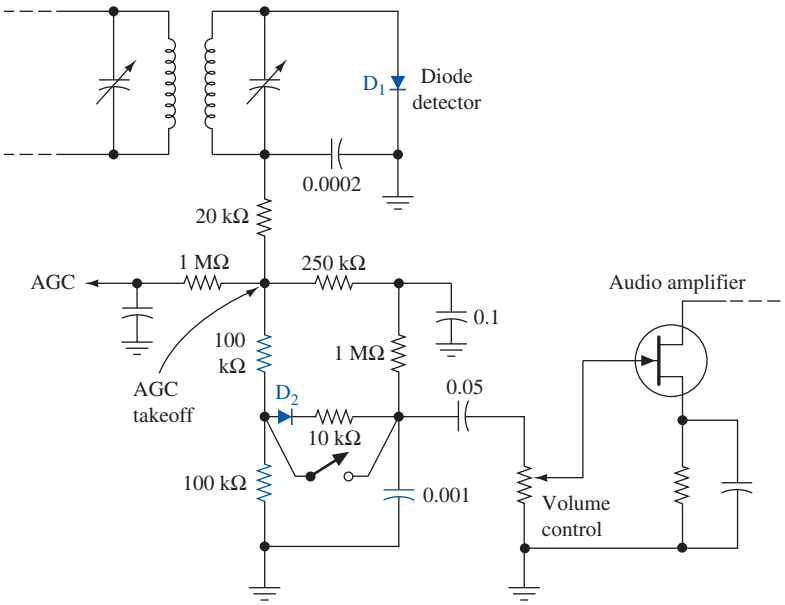


FIGURE 9 Automatic noise limiter.

it is not greater than some prescribed limit. Greater amplitudes cause $D_2$ to stop conducting until the noise impulse has decreased or ended. The varying audio signal from the diode detector, $D_1$, is developed across the two 100-kΩ resistors. If the received carrier is producing a −10-V level at the AGC takeoff, the anode of $D_2$ is at −5 V and the cathode is at −10 V. The diode is on and conducts the audio into the audio amplifier. Impulse noise will cause the AGC takeoff voltage to increase instantaneously, which means the anode of $D_2$ also does. However, its cathode potential does not change instantaneously since the voltage from cathode to ground is across a 0.001-μF capacitor. Remember that the voltage across a capacitance cannot change instantaneously. Therefore, the cathode stays at −10 V, and as the anode approaches −10 V, $D_2$ turns off and the detected audio is blocked from entering the audio amplifier. The receiver is silenced for the duration of the noise pulse.

The switch across $D_2$ allows the noise limiter action to be disabled by the user. This may be necessary when a marginal (noisy) signal is being received and the set output is being turned off excessively by the ANL.

## Metering

Many communications receivers are equipped with a meter that provides a visual indication of received signal strength. It is known as the **S meter** and often is found in the emitter leg of an AGC controlled amplifier stage (RF or IF). It reads dc current, which is usually inversely proportional to received signal strength. With no received signal, there is no AGC bias level, which causes maximum dc emitter current flow and therefore maximum stage voltage gain. As the AGC level increases, indicating an increasing received signal, the dc emitter current goes down, which thereby reduces gain. The S meter can thus be used as an aid to accurate tuning as well as providing a relative guide to signal strength. Modern designs use LED bar graphs instead of an electrical meter. This reduces cost and improves reliability.

**S Meter**
signal strength meter that responds to the received signal level

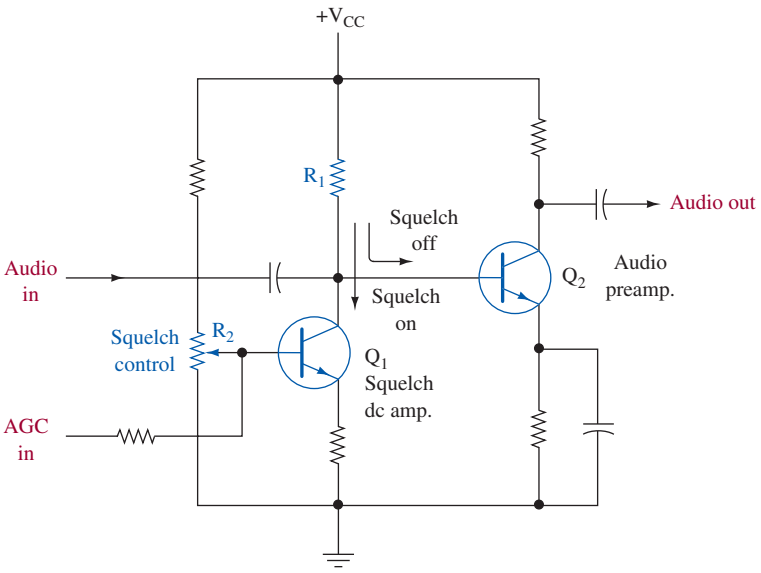


FIGURE 10 Squelch circuit.

In some receivers, the S meter can be electrically switched into different areas to aid in troubleshooting a malfunction. In those cases, the operator's manual provides a troubleshooting guide on the basis of meter readings obtained in different areas of the receiver.

## Squelch

When a sensitive receiver receives no carrier, the AGC action causes maximum system gain, which results in a high degree of noise output. This sounds like a hissing or rushing noise. This occurs in many communications applications where the user is constantly monitoring a transmission, such as in police service, but there is no transmission most of the time. Without a squelch system to cut off the receiver's output during transmission lulls, the noise output would cause the user severe aggravation. Squelch circuitry is also useful in minimizing noise output that occurs when tuning between stations. In fact, even better-quality broadcast FM receivers provide a squelch capability, but in these applications it is usually termed **muting.** Squelch circuitry is also referred to as the **quieting** or simply the *Q* circuit.

**Muting**
the squelch capability of better-quality broadcast FM receivers

**Quieting**
the tendency for an FM receiver's audio output signal to turn off as the detector responds to a low input carrier level or no carrier input

Figure 10 shows a squelch configuration that causes the audio amplifier stage to be cut off whenever no carrier (or an extremely weak station) is being received. In that case the AGC level is zero, which causes the dc amplifier stage, $Q_1$, to be on. This draws the current being supplied by $R_1$ into $Q_1$'s collector away from $Q_2$'s base, which means the audio preamp transistor, $Q_2$, is cut off. Thus, no ac signal is available from $Q_2$'s collector for subsequent power amplification to the speaker. When a signal is picked up by the receiver, the AGC level goes to some negative dc value, which causes $Q_1$ to turn off. This allows the dc current being supplied by $R_1$ to enter $Q_2$'s base, which biases it on so that audio preamplification can take place.

User adjustment of the squelch control ($R_2$) allows the cut-in point of quieting to be varied. This is necessary so that a very weak station, one that generates a small AGC level, will not cause the receiver's output to be squelched.

## Squelch Techniques*

The squelch circuitry in a receiver is employed to mute the audio output when the matching transmitter is turned off, or when signal conditions are too poor to produce a usable signal to noise ratio. Several different methods are used:

1. Fixed RF level threshold.
2. Variable level controlled by HF audio noise.
3. Pilot tone control signal.
4. Digital code control signal.
5. Microprocessor controlled algorithm (SmartSquelch™).

Two opposite conditions require different squelch activity:

1. Close operating range with a strong average RF level.
2. Distant operating range with a weak average RF level.

At a close operating range with a generally strong RF level, an ideal squelch would be aggressive and mute noise caused by multipath dropouts without allowing any noise to be produced in the audio signal. The problem with this approach is that an aggressive squelch will reduce operating range significantly. At longer operating distances with a lower average RF signal level, an ideal squelch would be less aggressive and allow the RF signal to dip closer to the noise floor and thus extend the operating range. This approach, however, can allow brief noise-ups at close range caused by multipath signal conditions.

Fixed RF-level squelch systems monitor only the incoming signal level to determine the need to squelch. While the squelch threshold is often adjustable in this type of design, determining an optimum setting is difficult at best because the average RF level in any given situation is almost impossible to predict. The receiver can also be falsely triggered by interference when the matching transmitter is turned off.

A squelch system that utilizes HF audio noise to control the squelch threshold is effective at muting the receiver when the transmitter is turned off. This approach also assumes that a dropout is preceded by a buildup of high frequency audio noise. While this type of squelch is fairly effective in most cases, it can also be fooled by audio containing a large amount of high-frequency content such as jingling car keys or coins.

A pilot tone controlled squelch system normally uses a continuous supersonic audio signal generated in the transmitter to control the audio output of the receiver. The receiver must be more sensitive to the pilot tone signal than the RF carrier to avoid inadvertent squelching when the carrier is weak, yet still strong enough to produce usable audio. This approach is highly reliable in muting the receiver when the transmitter is turned off, but it does not address the issue of strong and weak RF signal conditions when the transmitter is close or at a distance.

A digital code squelch technique utilizes a supersonic audio signal containing a unique 8-bit code generated in the transmitter to signal the receiver to open the audio output when the transmitter is turned on. The code is repeated several times at turn-on to ensure that it is picked up by the receiver. At turn-off, the transmitter first emits another code to signal the receiver to mute the audio, then after a brief delay, shuts down the transmitter power. A different code is used in every system to avoid conflicts in multichannel wireless systems. This approach is highly effective at keeping

* (Courtesy of Lectrosonics, Inc. Reprinted with permission.)

the receiver quiet when the transmitter is off, and it eliminates noise at turn-on and turn-off, but it does not address the issue of strong and weak signal conditions.

A unique technique called SmartSquelch™ is employed in some Lectrosonics receivers. This is a microprocessor-controlled technique that automatically controls the squelch activity by monitoring the RF level, the audio level, and the recent squelching history over a time period of several seconds. The system provides aggressive squelch activity during strong RF signal conditions to eliminate completely the noise caused by multipath conditions at close range. During weak RF signal conditions, the system provides less aggressive squelch activity to allow maximum operating range by taking advantage of audio masking to bury background noise.



## 4 Receiver Noise, Sensitivity, and Dynamic Range Relationships

As you will see, there are various trade-offs and relationships among noise figure, sensitivity, and dynamic range when dealing with high-quality receiver systems.

To understand fully these relationships for a receiver, it is first necessary to recognize the factors limiting sensitivity. In one word, the factor most directly limiting sensitivity is noise. Without noise, it would be necessary only to provide enough amplification to receive any signal, no matter how small. Unfortunately, noise is always present and must be understood and controlled as much as possible.

There are many sources of noise. The overwhelming effect in a receiver is thermal noise caused by electron activity in a resistance. The noise power is

$$P_n = kT\,\Delta f \tag{2}$$

For a 1-Hz bandwidth ($\Delta f$) and at 290 K

$$\begin{aligned} P &= 1.38 \times 10^{-23}\ \text{J/K} \times 290\ \text{K} \times 1\ \text{Hz} \\ &= 4 \times 10^{-21}\ \text{W} = -174\ \text{dBm} \end{aligned}$$

For a 1-Hz, 1-K system

$$P = 1.38 \times 10^{-23}\ \text{W} = -198\ \text{dBm}$$

The preceding shows the temperature variable is of interest because it is possible to lower the circuit temperature and decrease noise without changing other system parameters. At 0 K no noise is generated. It is very expensive and difficult, however, to operate systems anywhere near 0 K. Most receiving systems are operated at ambient temperature. The other possible means to lower thermal noise is to reduce the bandwidth. However, the designer has limited capability in this regard.

### Noise and Receiver Sensitivity

What is the sensitivity of a receiver? This question cannot be answered directly without making certain assumptions or knowing certain facts that will have an effect on

the result. Examination of the following formula illustrates the dependent factors in determining sensitivity.

$$S = \text{sensitivity} = -174 \text{ dBm} + \text{NF} + 10 \log_{10} \Delta f + \text{desired } S/N \qquad (3)$$

where −174 dBm is the thermal noise power at room temperature (290 K) in a 1-Hz bandwidth. It is the performance obtainable at room temperature if no other degrading factors are involved. The $10 \log_{10} \Delta f$ factor in Equation (3) represents the change in noise power due to a change above a 1-Hz bandwidth. The wider the bandwidth, the greater the noise power and the higher the noise floor. *S/N* is the desired signal-to-noise ratio in dB. It can be determined for the signal level, which is barely detectable, or it may be regarded as the level allowing an output at various ratings of fidelity. Often, a 0-dB *S/N* is used, which means that the signal and noise power at the output are equal. The signal can therefore also be said to be equal to the **noise floor** of the receiver. The receiver noise floor and the receiver output noise are one and the same thing.

**Noise Floor**
the baseline on a spectrum analyzer display, equal to the output noise of the device under test

Consider a receiver that has a 1-MHz bandwidth and a 20-dB noise figure. If an *S/N* of 10 dB is desired, the sensitivity (*S*) is

$$\begin{aligned} S &= -174 + 20 + 10 \log(1{,}000{,}000) + 10 \\ &= -84 \text{ dBm} \end{aligned}$$

You can see from this computation that if a lower *S/N* is required, better receiver sensitivity is necessary. If a 0-dB *S/N* is used, the sensitivity would become −94 dBm. The −94-dBm figure is the level at which the signal power equals noise power in the receiver's bandwidth. If the bandwidth were reduced to 100 kHz while maintaining the same input signal level, the output *S/N* would be increased to 10 dB due to noise power reduction.

## Dynamic Range

The **dynamic range** of an amplifier or receiver is the input power range over which it provides a useful output. It should be stressed that a receiver's dynamic and AGC ranges are usually two different quantities. The low-power limit is essentially the sensitivity specification discussed in the preceding paragraphs. It is a function of the noise. The upper limit has to do with the point at which the system no longer provides the same linear increase as related to the input increase. It also has to do with certain distortion components and their degree of effect.

**Dynamic Range**
for a receiver, the decibel difference between the largest tolerable receiver input level and its sensitivity (smallest useful input level)

When testing a receiver (or amplifier) for the upper dynamic range limit, it is common to apply a single test frequency and determine the *1-dB compression point*. As shown in Figure 11, this is the point in the input/output relationship where the output has just reached a level where it is 1 dB down from the ideal linear response. The input power at that point is then specified as the upper power limit determination of dynamic range.

When two frequencies ($f_1$ and $f_2$) are amplified, the second-order distortion products are generally out of the system passband and are therefore not a problem. They occur at $2f_1$, $2f_2$, $f_1 + f_2$, and $f_1 - f_2$. Unfortunately, the third-order products at $2f_1 + f_2$, $2f_1 - f_2$, $2f_2 - f_1$, and $2f_2 + f_1$ usually have components in the system bandwidth, introducing *intermodulation distortion* (IMD). It is often referred to simply as **intermod.** Recall that the use of MOSFETs at the

**Intermod**
intermodulation distortion

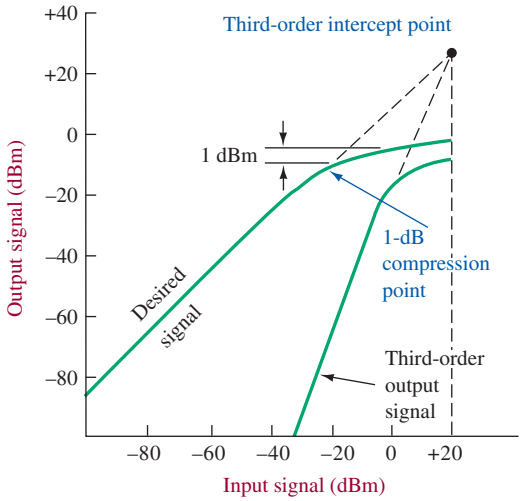


FIGURE 11 Third-order intercept and compression point illustration.

**Third-Order Intercept Point**
receiver figure of merit describing how well it rejects intermodulation distortion from third-order products resulting at the mixer output

**Input Intercept**
another name for third-order intercept point

critical RF and mixer stages is helpful in minimizing these third-order effects. Intermodulation effects have such a major influence on the upper dynamic range of a receiver (or amplifier) that they are often specified via the **third-order intercept point** (or **input intercept**). This is illustrated in Figure 11. It is the input power at the point where straight-line extensions of desired and third-order input/output relationships meet. It is about 20 dBm in Figure 11. It is used only as a figure of merit. The better a system is with respect to intermodulation distortion, the higher will be its input intercept.

The dynamic range of a system is usually approximated as

$$\text{dynamic range (dB)} \simeq \frac{2}{3}\,(\text{input intercept} - \text{noise floor}) \tag{4}$$

Poor dynamic range causes problems, such as undesired interference and distortion, when a strong signal is received. The current state of the art is a dynamic range of about 100 dB.

## Example 7

*A receiver has a 20-dB noise figure (NF), a 1-MHz bandwidth, a +5-dBm third-order intercept point, and a 0-dB S/N. Determine its sensitivity and dynamic range.*

### Solution

$$\begin{aligned} S &= -174\ \text{dBm} + \text{NF} + 10\log_{10}\Delta f + \frac{S}{N} \qquad (3)\\ &= -174\ \text{dBm} + 20\ \text{dB} + 10\log_{10}10^6 + 0 = -94\ \text{dBm} \end{aligned}$$

$$\begin{aligned} \text{dynamic range} &\simeq \frac{2}{3}\,(\text{input intercept} - \text{noise floor}) \qquad (4)\\ &= \frac{2}{3}[5\ \text{dBm} - (-94\ \text{dBm})]\\ &= 66\ \text{dB} \end{aligned}$$

## Example 8

*The receiver from Example 7 has a preamplifier at its input. The preamp has a 24-dB gain and a 5-dB NF. Calculate the new sensitivity and dynamic range.*

### Solution

The first step is to determine the overall system noise ratio (NR). Let us assume that

$$\text{NR} = \log^{-1}\frac{\text{NF}}{10}$$

Letting $\text{NR}_1$ represent the preamp and $\text{NR}_2$ the receiver, we have

$$\text{NR}_1 = \log^{-1}\frac{5\text{ dB}}{10} = 3.16$$

$$\text{NR}_2 = \log^{-1}\frac{20\text{ dB}}{10} = 100$$

The overall NR is

$$\text{NR} = \text{NR}_1 + \frac{\text{NR}_2 - 1}{P_{G_1}} \tag{5}$$

and

$$P_{G1} = \log^{-1}\frac{24\text{ dB}}{10} = 251$$

$$\text{NR} = 3.16 + \frac{100 - 1}{251} = 3.55$$

$$\text{NF} = 10\log_{10} 3.55 = 5.5\text{ dB}$$

$$= \text{total system NF}$$

$$S = -174\text{ dBm} + 5.5\text{ dB} + 60\text{ dB} = -108.5\text{ dBm}$$

The third-order intercept point of the receiver alone had been +5 dBm but is now preceded by the preamp with 24-dB gain. Assuming that the preamp can deliver 5 dBm to the receiver without any appreciable intermodulation distortion, the system's third-order intercept point is +5 dBm −24 dB = −19 dBm. Thus,

$$\text{dynamic range} \simeq \frac{2}{3}\left[-19\text{ dBm} - (-108.5\text{ dBm})\right]$$

$$= 59.7\text{ dB}$$

## Example 9

*The 24-dB gain preamp in Example 8 is replaced with a 10-dB gain preamp with the same 5-dB NF. What are the system's sensitivity and dynamic range?*

**Solution**

$$\text{NR} = 3.16 + \frac{100 - 1}{10} = 13.1$$

$$\text{NF} = 10 \log_{10} 13.1 = 11.2 \text{ dB}$$

$$S = -174 \text{ dBm} + 11.2 \text{ dB} + 60 \text{ dB} = -102.8 \text{ dBm}$$

$$\text{dynamic range} \simeq \frac{2}{3}[-5 \text{ dBm} - (-102.8 \text{ dB})] = 65.2 \text{ dB}$$

The results of Examples 7 to 9 are summarized as follows:

| | Receiver Only | Receiver and 10-dB Preamp | Receiver and 24-dB Preamp |
|---|---|---|---|
| NF (dB) | 20 | 11.2 | 5.5 |
| Sensitivity (dBm) | −94 | −102.8 | −108.5 |
| Third-order intercept point (dBm) | +5 | −5 | −19 |
| Dynamic range (dB) | 66 | 65.2 | 59.7 |

An analysis of the examples and these data shows that the greatest sensitivity can be realized by using a preamplifier with the lowest noise figure and highest available gain to mask the higher NF of the receiver. Remember that as gain increases, so does the chance of spurious signals and intermodulation distortion components. A preamplifier used prior to a receiver input has the effect of decreasing the third-order intercept proportionally to the gain of the amplifier, while the increase in sensitivity is less than the gain of the amplifier. Therefore, to maintain a high dynamic range, it is best to use only the amplification needed to obtain the desired noise figure. It is not helpful in an overall sense to use excessive gain. The data in the chart show that adding the 10-dB gain preamplifier improved sensitivity by 8.8 dB and decreased dynamic range by only 0.8 dB. The 24-dB gain preamp improved sensitivity by 14.5 dB but decreased the dynamic range by 6.3 dB.

## Intermodulation Distortion Testing

It is common to test an amplifier for its intermodulation distortion (IMD) by comparing two test frequencies to the level of a specific IMD product. As previously mentioned, the second-order products are usually outside the frequency range of concern. This is generally true for all the even-order products and is illustrated in Figure 12. It shows some second-order products that would be outside the bandwidth of interest for most systems.

The odd products are of interest because some of them can be quite close to the test frequencies $f_1$ and $f_2$ shown in Figure 12. The third-order products shown ($2f_2 - f_1$ and $2f_1 - f_2$) have the most effect, but even the fifth-order products ($3f_2 - 2f_1$ and $3f_1 - 2f_2$) can be troublesome. Figure 13(a) shows a typical spectrum analyzer display when two test signals are applied to a mixer or small-signal amplifier. Notice that the third-order products are shown 80 dB down from the test signals, while the fifth-order products are more than 90 dB down.

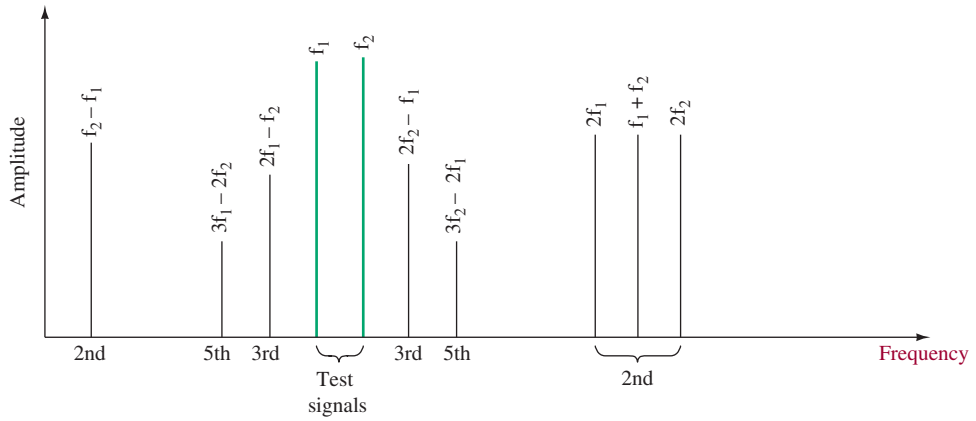


FIGURE 12 IMD products (second-, third-, and fifth-order for two test signals).

Figure 13(b) shows the IMD testing result when applying two frequencies to a typical Class AB linear power amplifier. The higher odd-order products (up to the eleventh in this case) are significant for the power amplifier. Fortunately, these effects are less critical in power amplifiers than in the sensitive front end of a radio receiver.

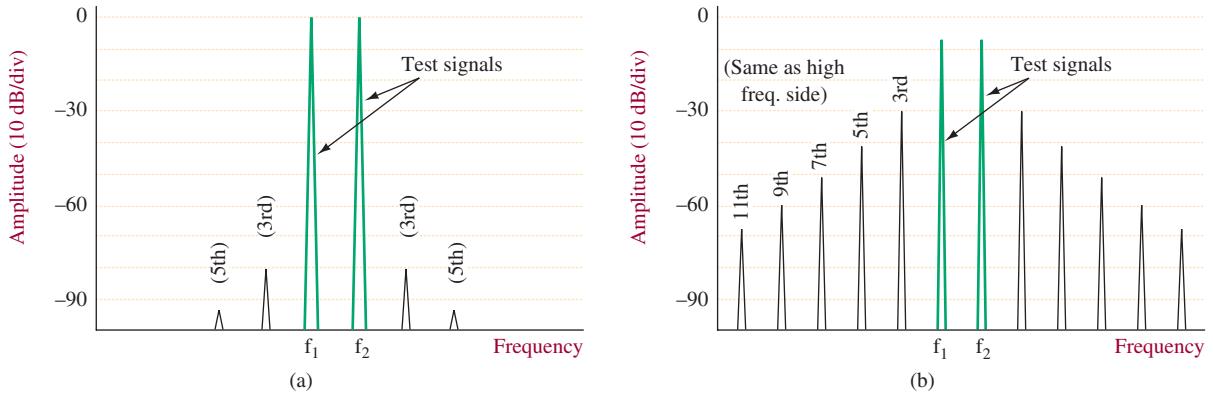


FIGURE 13 IMD testing: (a) mixer; (b) Class AB linear power amplifier.



## 5 Frequency Synthesis

Most transceiver designs use frequency synthesizers to generate the highly accurate frequencies used for the transmitter carrier and receiver local oscillator. They are also widely used in signal generators and instrumentation systems such as spectrum analyzers and modulation analyzers. The concept of frequency synthesis has been around since the 1930s, but the cost of the circuitry necessary was prohibitive for most designs until integrated circuit technology started offering the phased-locked loop (PLL) in a single, low-cost chip.

A basic frequency synthesizer is shown in Figure 14. Besides the PLL, the synthesizer includes a very stable crystal oscillator and the divide-by-*N* programmable

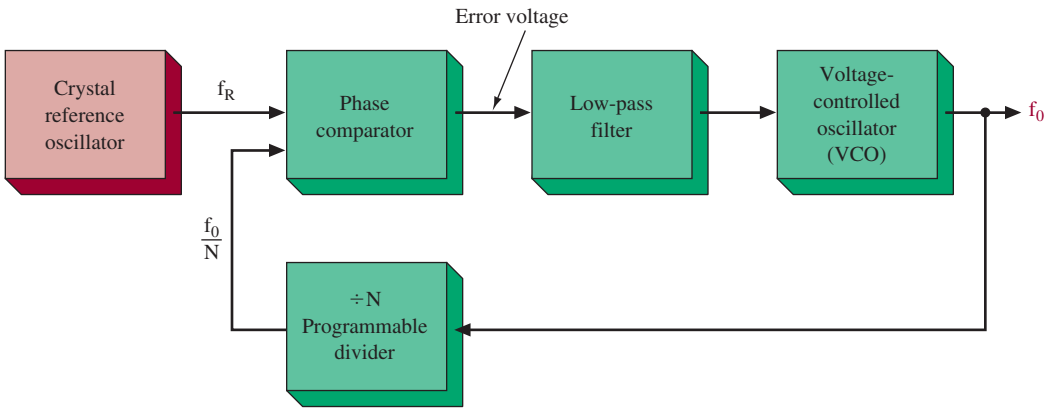


FIGURE 14 Basic frequency synthesizer.

divider. The output frequency of the voltage-controlled oscillator (VCO) is a function of the applied control voltage.

**Error Voltage**
output of the phase comparator in a PLL

The output of the phase comparator is a voltage termed the **error voltage,** which is proportional to the phase difference between the signals at its two inputs. This output controls the frequency of the VCO so that the phase comparator input from the VCO via the variable divider ($\div N$) remains at a constant phase difference with the reference input, $f_R$, so that the frequencies are equal. The VCO frequency is thus maintained at $Nf_R$. Such a synthesizer will produce a number of frequencies separated by $f_R$ and is the most basic form of phase-locked synthesizer. Its stability is directly governed by the stability of the reference input $f_R$, although it is also related to noise in the phase comparator, noise in any dc amplifier between the phase comparator and the VCO, and the characteristics of the low-pass filter usually placed between the phase comparator and the VCO.

Consider the case where the programmable divider in Figure 14 can divide by integers from $N$ equals 1 to 10. If the reference frequency is 100 kHz and $N = 1$, then the output should be 100 kHz. If $N = 2$, $f_0$ must equal 200 kHz to provide a constant phase difference for the phase comparator. Similarly, for $N = 5$, $f_0 = 500$ kHz. The pattern should be apparent to you now. A synthesizer with outputs of 100 kHz, 200 kHz, 300 kHz, and so on, is not useful for most applications. Much smaller spacing between output frequencies is necessary, and means to attain that condition are discussed next.

The design of frequency synthesizers using the principle described above involves the design of various subsystems, including the VCO, the phase comparator, any low-pass filters in the feedback path, and the programmable dividers.

## Programmable Division

A typical programmable divider is shown in Figure 15. It consists of three stages with division ratios $K_1$, $K_2$, and $K_3$, which may be programmed by inputs $P_1$, $P_2$, and $P_3$, respectively. Each stage divides by $K_n$ except during the first cycle after the program input $P_n$ is loaded, when it divides by $P$ (which may have any integral value from $n$ to $K$). Hence the counter illustrated divides by $P_3 \times (K_1K_2) + P_2K_1 + P_1$, and when an output pulse occurs, the program inputs are reloaded. The counter will divide by any integer between 1 and $(K_1K_2K_3 - 1)$.

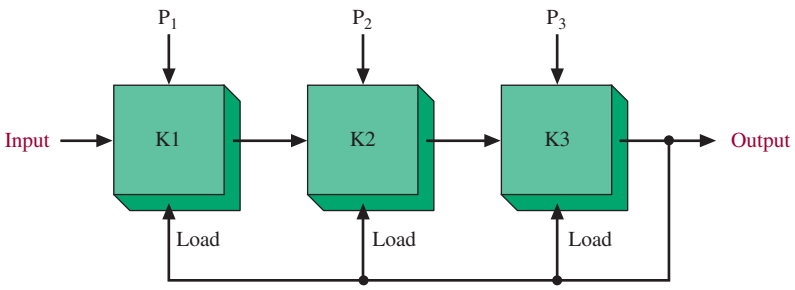


FIGURE 15 Typical programmable divider.

The most common programmable dividers are either decades or divide-by-16 counters. These are readily available in various logic families, including CMOS and TTL. CMOS devices are preferred when power consumption is a consideration. Using such a package, one can program a value of *N* from about 3 to 9999. The theoretical minimum count of 1 is not possible because of the effects of circuit propagation delays. The use of such counters permits the design of frequency synthesizers, which are programmed with decimal thumbwheel switches and use a minimum number of components. If a synthesizer is required with an output of nonconsecutive frequencies and steps, a custom programmable counter may be made using some custom devices such as programmable logic devices (PLDs) or programmable divider ICs. This is the case for the citizen's band synthesizer discussed later in this section.

The maximum input frequency of a programmable divider is limited by the speed of the logic used, and more particularly by the time taken to load the programmed count. The power consumption of high-frequency digital circuitry can be an issue in low-power applications (e.g., cell phones). The output frequency of the simple synthesizer in Figure 14 is limited, of course, to the maximum frequency of the programmable divider.

There are many ways of overcoming this limitation on synthesizer frequency. The VCO output may be mixed with the output of a crystal oscillator and the resulting difference frequency fed to the programmable divider, or the VCO output may be multiplied from a low value in the operating range of the programmable divider to the required high output frequency. Alternatively, a fixed ratio divider capable of operating at a high frequency may be interposed between the VCO and the programmable divider. These methods are shown in Figures 16(a), (b), and (c), respectively.

All the methods discussed above have their problems, although all have been used and will doubtless continue to be used in some applications. Method (a) is the most useful technique because it allows narrower channel spacing or high reference frequencies (hence faster lock times and less loop-generated jitter) than the other two, but it has the drawback that, because the crystal oscillator and the mixer are within the loop, any crystal oscillator noise or mixer noise appears in the synthesizer output. Nevertheless, this technique has much to recommend it.

The other two techniques are less useful. Frequency multiplication introduces noise, and both techniques must either use a very low reference or rather wide channel spacing. What is needed is a programmable divider that operates at the VCO frequency—one can then discard the techniques described above and synthesize directly at whatever frequency is required.

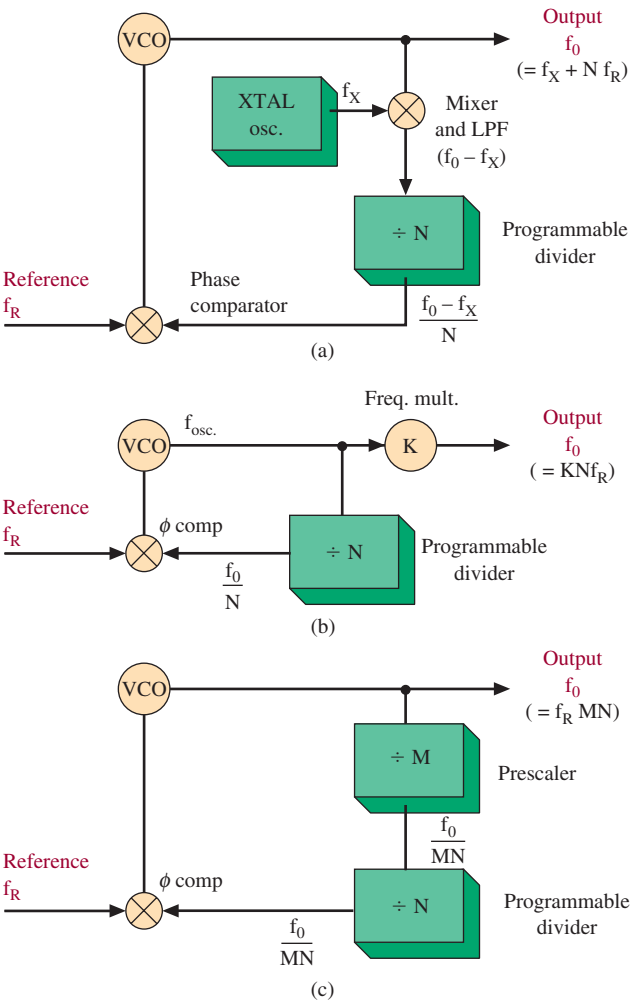


FIGURE 16 Synthesizer alternatives.

## Two-Modulus Dividers

Considerations of speed and power make it impractical to design programmable counters of the type described above, even using ECL, at frequencies much into the VHF band (30 to 300 MHz) or above. A different technique exists, however, using two-modulus dividers; that is, in one mode it divides by $N$ and in the other mode, by $N + 1$.

Figure 17 shows a divider using a two-modulus prescaler. The system is similar to the one shown in Figure 16(c), but in this case the prescaler divides by either $N$ or $N + 1$, depending on the logic state of the control input. The output of the prescaler feeds two normal programmable counters. Counter 1 controls the two-modulus prescaler and has a division ratio $A$. Counter 2, which drives the output, has a division ratio $M$. In operation the $N/(N + 1)$ prescaler (Figure 17) divides by $N + 1$ until the count in programmable counter 1 reaches $A$ and then divides by $N$ until the count in programmable counter 2 reaches $M$, when both counters are reloaded, a pulse passes to output, and the cycle restarts. The division ratio of the entire system is $A(N + 1) + N(M - A)$, which equals $NM + A$. There is only one constraint on the system—because the two-modulus

prescaler does not change modulus until counter 1 reaches $A$, the count in counter 2 ($M$) must never be less than $A$. This limits the minimum count the system may reach to $A(N + 1)$, where $A$ is the maximum possible value of count in counter 1.

The use of this system entirely overcomes the problems of high-speed programmable division mentioned earlier. A number of ÷ 10/11 counters working at frequencies of up to 500 MHz and also ÷ 5/6, ÷ 6/7, and ÷ 8/9 counters working up to 500 MHz are now readily available. There is also a pair of circuits intended to allow ÷ 10/11 counters to be used in ÷ 40/41 and ÷ 80/81 counters in 25-kHz and 12.5-kHz channel VHF synthesizers. It is not necessary for two-modulus prescalers to divide by $N/(N + 1)$. The same principles apply to ÷ $N/(N + Q)$ counters (where $Q$ is any integer), but ÷ $N/(N + 1)$ tends to be most useful.

***Citizen's Band Synthesizer*** The availability of low-cost PLL and programmable divider ICs has led to the use of synthesizers in almost all channelized transceivers. This is true even for the very low-cost systems used on the 40-channel citizen's band. A typical CB transceiver is shown in Figure 18.

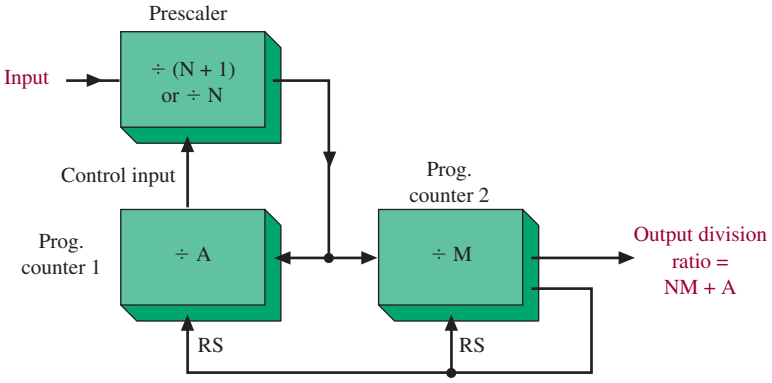


FIGURE 17 Divider system with two-modulus prescaler.




FIGURE 18 The Cobra 19 DX IV CB radio. (Courtesy of Cobra Electronics Corporation.)

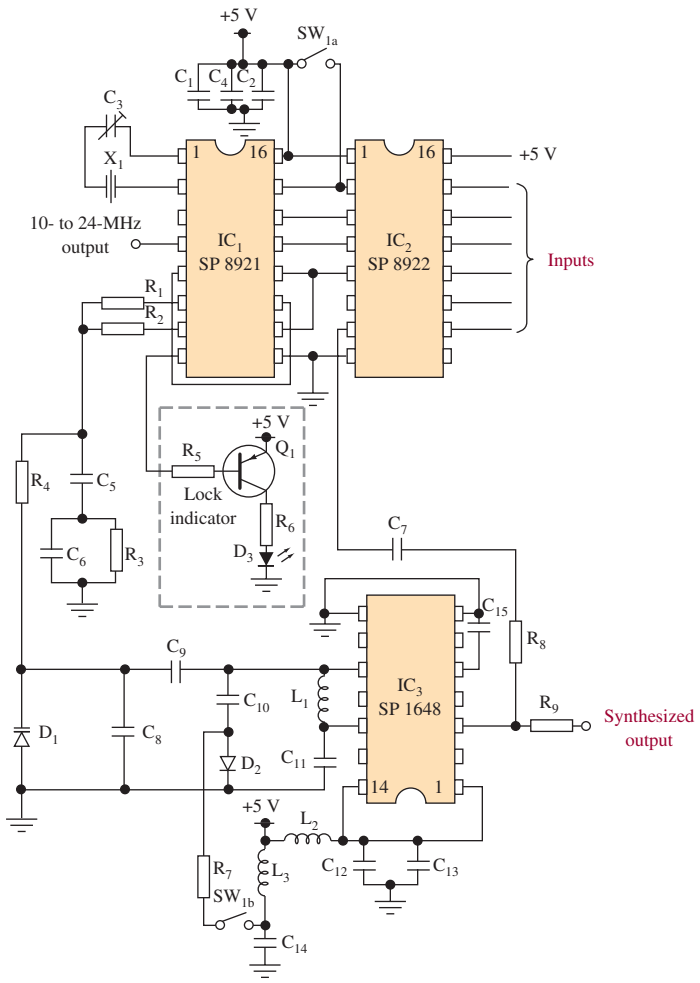


All resistors are $\frac{1}{8}$ W ± 10% unless otherwise stated. Capacitor values are in microfarads unless otherwise stated.

| | |
|---|---|
| $IC_1$ | SP8921 |
| $IC_2$ | SP8922/SP8923 |
| $IC_3$ | SP1648 |
| $Q_1$ | 2N 3906 |
| $D_1$ | ZC822, Ferranti varactor diode |
| $D_2$ | 1N4148 Silicon diode |
| $D_3$ | LED lock indicator |
| $X_1$ | 10.240-MHz crystal, series mode |
| $L_1$ | 11 turns 30-gauge cotton-covered wire on Neosid A7 assembly |
| $L_2$ | 100-$\mu$H RF choke |
| $L_3$ | 100-$\mu$H RF choke |
| $R_1$ | 1.0 kΩ ± 5% |
| $R_2$ | 1.0 kΩ ± 5% |
| $R_3$ | 8.2 kΩ ± 5% |
| $R_4$ | 33 kΩ |
| $R_5$ | 10 kΩ |
| $R_6$ | 150 (adjust for LED brightness) |
| $R_7$ | 1 kΩ |
| $R_8$ | 1 kΩ |
| $R_9$ | 470 (adjust for required output level) |
| $C_1$ | 0.1 |
| $C_2$ | 100, 10 V solid tantalum |
| $C_3$ | 2-22 pF variable |
| $C_4$ | 100 10 V solid tantalum |
| $C_5$ | 10 V solid tantalum |
| $C_6$ | 0.1 |
| $C_7$ | 1000 pF |
| $C_8$ | 22 pF +10% |
| $C_9$ | 0.01 |
| $C_{10}$ | 100 pF ± 10% |
| $C_{11}$ | 0.01 |
| $C_{12}$ | 0.1 |
| $C_{13}$ | 10 solid tantalum |
| $C_{14}$ | 0.1 |
| $C_{15}$ | 1000 pF |
| $SW_1$ | 2-pole, 1-way switch, (receive/transmit) |

**FIGURE 19** CB synthesizer circuit.

The synthesizer circuit shown in Figure 19 allows all necessary frequencies for a CB transceiver to be generated by using a single-crystal oscillator. The 40 channels are spaced at 10-kHz intervals (with some gaps) between 26.965 and 27.405 MHz. Local oscillator frequencies for the reception of these channels with intermediate frequencies of 455 kHz, 10.240 MHz, and 10.700 MHz are also synthesized. Table 1 shows the relationship between the program input and the channel selected. By using an input code other than one of the 40 given, other frequencies may be selected—in fact, there are 64 channels at 10-kHz separation available from 26.895 to 27.525 MHz and programming starts at all zeros on input *A* through *F* for 26.895, and each increase of one bit to the binary number on these inputs increases the channel frequency by 10 kHz until all 1s give 27.535 MHz. The *A* input is the least significant bit, *F* the most significant. The programming input on pin 16 of the SP8922 IC in Figure 19 is normally kept high, but making it low increases the programmed frequency by 5 kHz. Table 2 shows the programming required to obtain various offsets. This synthesizer is intended for use in double-conversion receivers with IFs of 10.695 MHz and 455 kHz and generates either the frequency programmed or the frequency programmed less 10.695 MHz.

If other offsets are programmed in connections to pin 15 of the SP8921 IC and pin 2 of the SP8922 IC, they must be altered according to Table 2. The synthesizer consists of the SP8921 and the SP8922 plus an SP1648 voltage-controlled oscillator. The programming inputs to the SP8922 are as shown in Table 1. Logic 1 is +3 V or more; logic 0 is either ground or an open circuit.

The crystal oscillator in the SP8921 (Figure 19) is trimmed by a small variable capacitor, $C_3$, which must be set up during alignment of the synthesizer so that the output frequency on pin 4 is 10.240000 MHz. The only other adjustment is to set the core of $L_1$ so that the varicap control voltage ($D_1$) is 2.85 V when the synthesizer is set to channel 30 transmit. Because the difference between transmit and receive frequencies is over 10 MHz, it is not possible to tune both with the same tuned circuit, and an extra capacitor is switched by means of a diode during reception.

The phase/frequency comparator of the SP8921 can have an output swing from 0.5 V to 3.8 V, but it is better to work in the range 1.5 to 3.0 V because the phase-error output voltage is more linear in this region. The ZC822 tuning diode specified for this synthesizer may be replaced by any other tuning diode provided that it will tune the VCO over the required range, or a little more, as the control voltage goes from 1.5 V to 3.0 V. With slight coil changes, the MV2105 has been used successfully in this synthesizer.

The low-pass filter of the PLL consists of $C_5$, $C_6$, and $R_3$. If faster lock (at the expense of larger noise and reference sidebands) is required, the filter may be redesigned. If the synthesizer is used in a scanning receiver, a switched filter should be used to give fast lock during scanning but a slower lock and cleaner signal during normal operation. A scanning receiver automatically "searches" a number of channels until it finds a good received signal. It then stays tuned to that channel until "nudged" by the operator and/or the reception is lost. The lock output on pin 8 of the SP8921 is used to light an indicator when the loop is not locked and should also be used, in a transmitter or transceiver, to prevent transmission when the loop is unlocked.

**Table 1** Input Code for CB Synthesizer of Figure 19

| Channel Number | Input Code F | E | D | C | B | A | Output Frequency with $R/T = 0$ (MHz) |
|---|---|---|---|---|---|---|---|
| 1 | 0 | 0 | 0 | 1 | 1 | 1 | 26.965 |
| 2 | 0 | 0 | 1 | 0 | 0 | 0 | 26.975 |
| 3 | 0 | 0 | 1 | 0 | 0 | 1 | 26.985 |
| 4 | 0 | 0 | 1 | 0 | 1 | 1 | 27.005 |
| 5 | 0 | 0 | 1 | 1 | 0 | 0 | 27.015 |
| 6 | 0 | 0 | 1 | 1 | 0 | 1 | 27.025 |
| 7 | 0 | 0 | 1 | 1 | 1 | 0 | 27.035 |
| 8 | 0 | 1 | 0 | 0 | 0 | 0 | 27.055 |
| 9 | 0 | 1 | 0 | 0 | 0 | 1 | 27.065 |
| 10 | 0 | 1 | 0 | 0 | 1 | 0 | 27.075 |
| 11 | 0 | 1 | 0 | 0 | 1 | 1 | 27.085 |
| 12 | 0 | 1 | 0 | 1 | 0 | 1 | 27.105 |
| 13 | 0 | 1 | 0 | 1 | 1 | 0 | 27.115 |
| 14 | 0 | 1 | 0 | 1 | 1 | 1 | 27.125 |
| 15 | 0 | 1 | 1 | 0 | 0 | 0 | 27.135 |
| 16 | 0 | 1 | 1 | 0 | 1 | 0 | 27.155 |
| 17 | 0 | 1 | 1 | 0 | 1 | 1 | 27.165 |
| 18 | 0 | 1 | 1 | 1 | 0 | 0 | 27.175 |
| 19 | 0 | 1 | 1 | 1 | 0 | 1 | 27.185 |
| 20 | 0 | 1 | 1 | 1 | 1 | 1 | 27.205 |
| 21 | 1 | 0 | 0 | 0 | 0 | 0 | 27.215 |
| 22 | 1 | 0 | 0 | 0 | 0 | 1 | 27.225 |
| 23 | 1 | 0 | 0 | 1 | 0 | 0 | 27.255 |
| 24 | 1 | 0 | 0 | 0 | 1 | 0 | 27.235 |
| 25 | 1 | 0 | 0 | 0 | 1 | 1 | 27.245 |
| 26 | 1 | 0 | 0 | 1 | 0 | 1 | 27.265 |
| 27 | 1 | 0 | 0 | 1 | 1 | 0 | 27.275 |
| 28 | 1 | 0 | 0 | 1 | 1 | 1 | 27.285 |
| 29 | 1 | 0 | 1 | 0 | 0 | 0 | 27.295 |
| 30 | 1 | 0 | 1 | 0 | 0 | 1 | 27.305 |
| 31 | 1 | 0 | 1 | 0 | 1 | 0 | 27.315 |
| 32 | 1 | 0 | 1 | 0 | 1 | 1 | 27.325 |
| 33 | 1 | 0 | 1 | 1 | 0 | 0 | 27.335 |
| 34 | 1 | 0 | 1 | 1 | 0 | 1 | 27.345 |
| 35 | 1 | 0 | 1 | 1 | 1 | 0 | 27.355 |
| 36 | 1 | 0 | 1 | 1 | 1 | 1 | 27.365 |
| 37 | 1 | 1 | 0 | 0 | 0 | 0 | 27.375 |
| 38 | 1 | 1 | 0 | 0 | 0 | 1 | 27.385 |
| 39 | 1 | 1 | 0 | 0 | 1 | 0 | 27.395 |
| 40 | 1 | 1 | 0 | 0 | 1 | 1 | 27.405 |

**Table 2** Offset Codes for Synthesizer of Figure 19

| Offset | SP8921 | SP8922 |
|---|---|---|
| 0 | 0 | 0 |
| 455 kHz | 0 | 1 |
| 10.240 MHz | 1 | 0 |
| 10.695 MHz | 1 | 1 |

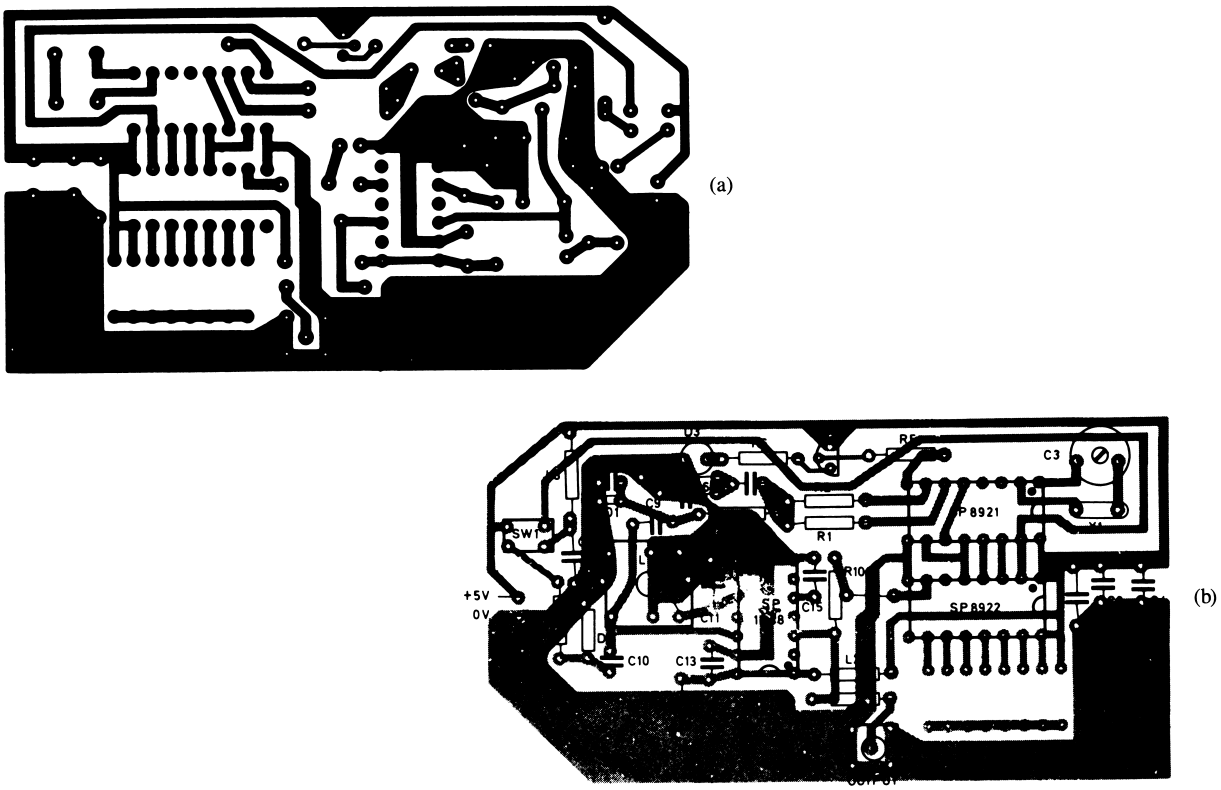


FIGURE 20 Printed circuit board details: (a) printed circuit layout for CB synthesizer; (b) component layout for CB synthesizer.

Figure 20 shows the circuit board layout and component location of this synthesizer. It requires a single +5-V supply and draws about 60 mA. The performance is improved if a double-sided board is used with a ground plane on one side. A small additional improvement would come from the use of a grounded screening can over the whole system to prevent stray noise pickup.

The synthesizer has reference frequency sidebands 50 dB down at 1.25 kHz from the carrier. All output over 5 kHz from the carrier is over 70 dB down. Lock time for a change from channel 0 to channel 40 (a frequency change of 440 kHz) is around 35 ms. Stepping from transmit to receive, or vice versa, takes somewhat longer because of the much larger change of frequency but is generally complete within 75 ms.

A block diagram of a UHF receiver incorporating a PLL frequency synthesizer circuit is provided in Figure 21. The receiver features microprocessor control of 256 frequencies with 0.025-MHz spacing. The unit can also be built to provide 13 different frequency blocks from 537.6 MHz to 865.0 MHz. The schematic of the UHF multifrequency receiver is provided in Figure 22.

The signal at the antenna is fed through an RF filter and amplifier. The amplified RF signal is then mixed with the frequency, generated by the Philips Semiconductor SA7025 1-GHz low-voltage fractional-*N* synthesizer to down-convert the receive signal to the IF frequency. A Philips TDA7021T FM radio circuit for MTS provides the circuitry for the FM reception. The IC uses a frequency-locked loop (FLL) technology with an intermediate frequency of 76 kHz.

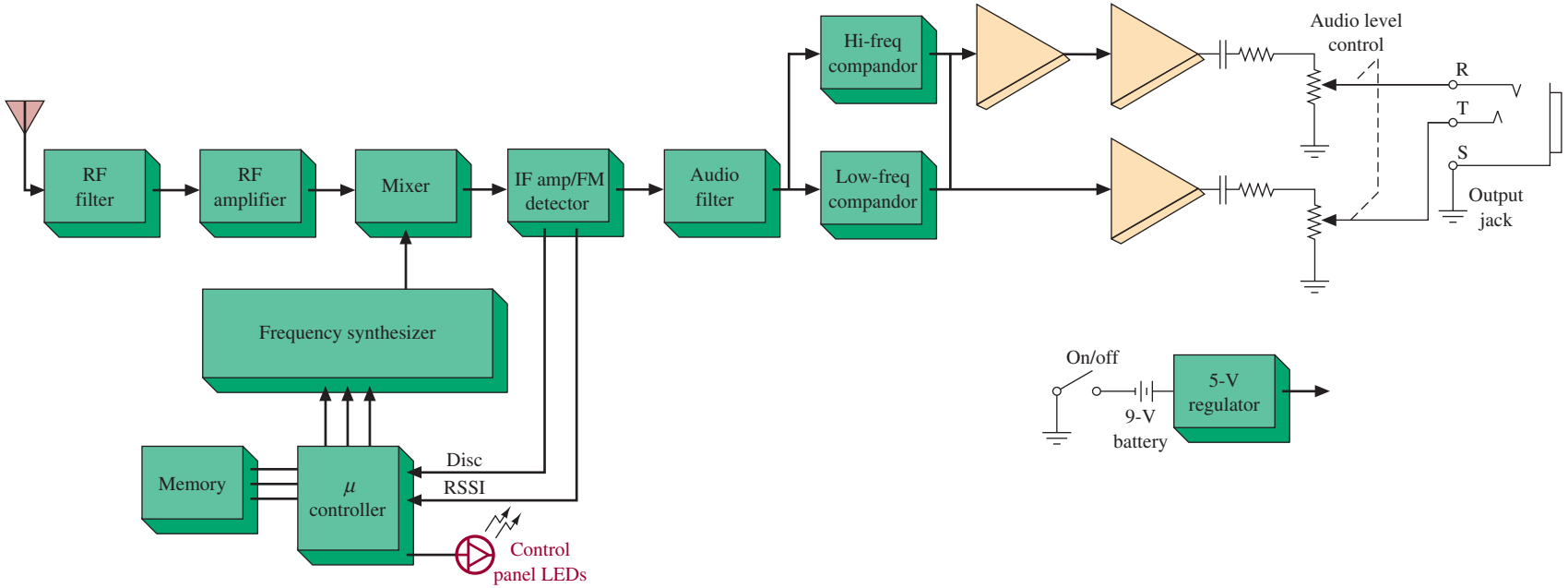


FIGURE 21 UCR110 block diagram. (Courtesy of Lectrosonics, Inc.)

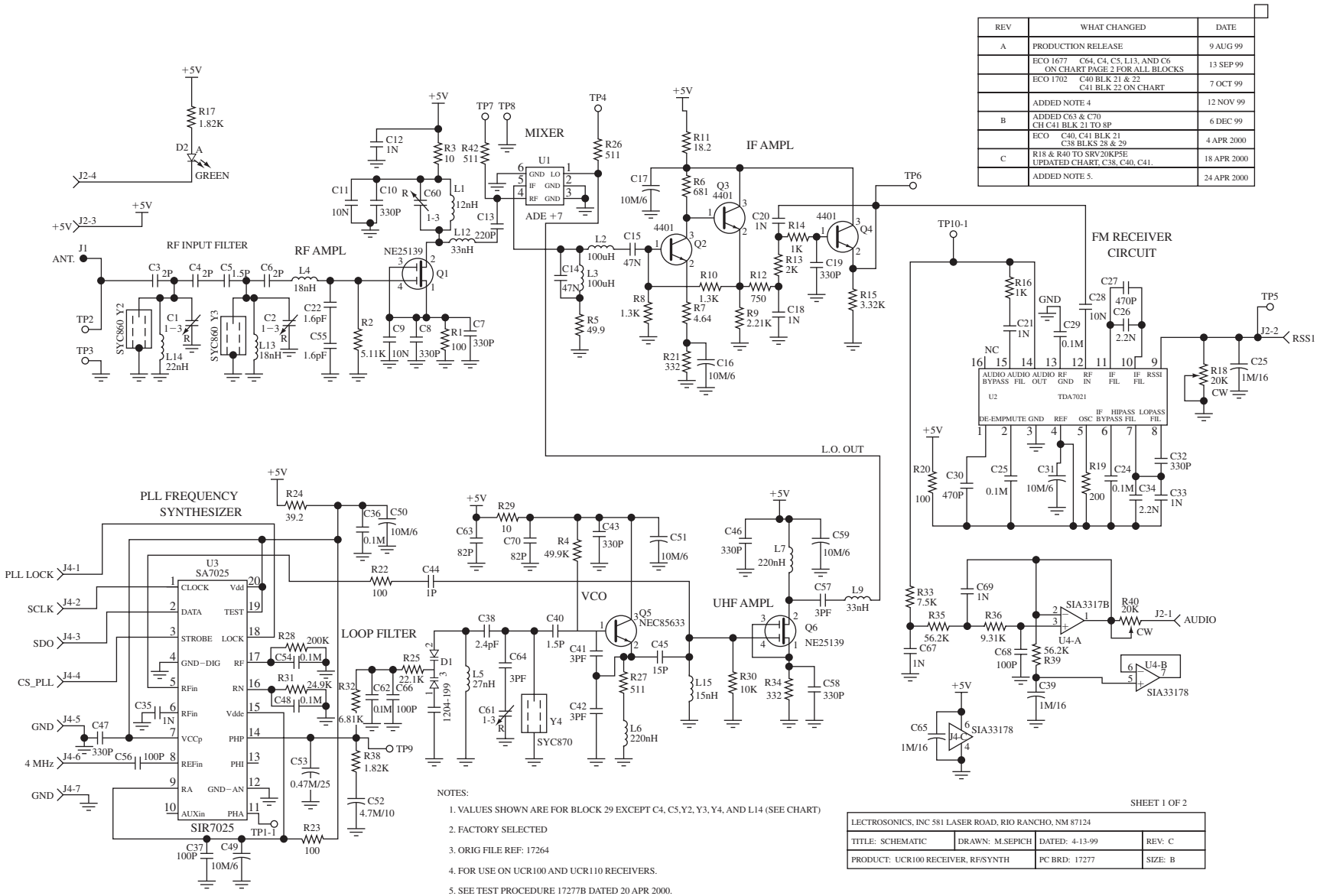


FIGURE 22 The schematic of a UHF multifrequency receiver. (Courtesy of Lectrosonics, Inc.)



# 6 Direct Digital Synthesis

**Direct Digital Synthesis**
frequency synthesizer design that has better repeatability and less drifting but limited maximum output frequencies, greater phase noise, and greater complexity and cost

**Direct digital synthesis** (DDS) systems became economically feasible in the late 1980s. They offer some advantages over the analog synthesizers discussed in the previous section but generally tend to be somewhat more complex and expensive. They are useful, however, for some applications. The digital logic used can improve on the repeatability and drift problems of analog units that often require select-by-test components. These advantages also apply to digital filters that have replaced some standard analog filters in recent years. The disadvantages of DDS (and digital filters) are the relatively limited maximum output frequency and greater complexity/cost considerations.

A block diagram for a basic DDS system is provided in Figure 23. The numerically controlled oscillator (NCO) contains the phase accumulator and read-only memory (ROM) look-up table. The NCO provides the updated information to the digital-to-analog converter (DAC) to generate the RF output.

The phase accumulator generates a phase increment of the output waveform based on its input (Δ phase in Figure 23). The input (Δ phase) is a digital word that, in conjunction with the reference oscillator ($f_{CLK}$), determines the frequency of the output waveform. The output of the phase accumulator serves as a variable-frequency oscillator generating a digital ramp. The frequency of the signal is defined by the Δ phase as

$$f_{out} = \frac{(\Delta \text{ phase}) f_{CLK}}{2^N} \tag{6}$$

for an $N$-bit phase accumulator.

Translating phase information from the phase accumulator into amplitude data is accomplished by means of the look-up table stored in memory. Its digital output (amplitude data) is converted into an analog signal by the DAC. The low-pass filter provides a spectrally pure sine-wave output.

The final output frequency is typically limited to about 40 percent of $f_{CLK}$. The phase accumulator size is chosen based on the desired frequency resolution, which is equal to $f_{CLK} \div 2^N$ for an $N$-bit accumulator.

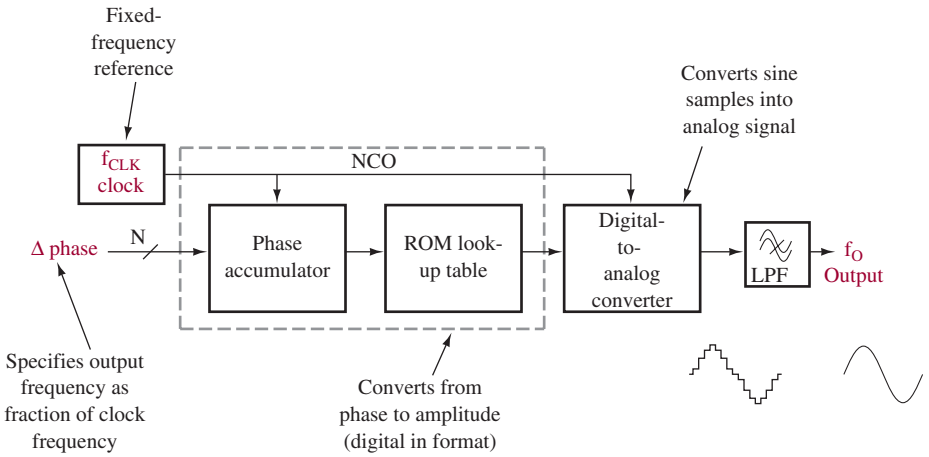


FIGURE 23 DDS block diagram.

## Example 10

*Calculate the maximum output frequency and frequency resolution for a DDS when operated at* $f_{CLK\ MAX}$.

### Solution

The maximum output frequency is approximately 40 percent of $f_{CLK\ MAX}$:

$$= 0.40 \times 100 \text{ MHz}$$
$$= 40 \text{ MHz}$$

The frequency resolution is given by $f_{CLK} \div 2^N$:

$$= \frac{100 \text{ MHz}}{2^{32}} \cong 0.023 \text{ Hz}$$

The preceding example shows that DDS offers the possibility for extremely small frequency increments. This is one of the advantages offered by DDS over the analog synthesizers described in Section 5. Another DDS advantage is the ability to shift frequencies quickly. This characteristic is useful for the spread-spectrum systems described in Section 8.

The disadvantages of DDS include the limit on maximum output frequency and higher **phase noise.** Spurious changes in phase of the synthesizer's output result in energy at frequencies other than the desired one. This phase noise is often specified for all types of oscillators and synthesizers. It is usually specified in dB/$\sqrt{\text{Hz}}$ at a particular offset from center frequency. A specification of −90 dB/$\sqrt{\text{Hz}}$ at a 10-kHz offset means that noise energy at a 1-Hz bandwidth 10 kHz

**Phase Noise**
spurious changes in the phase of a frequency synthesizer's output that produce frequencies other than the desired one

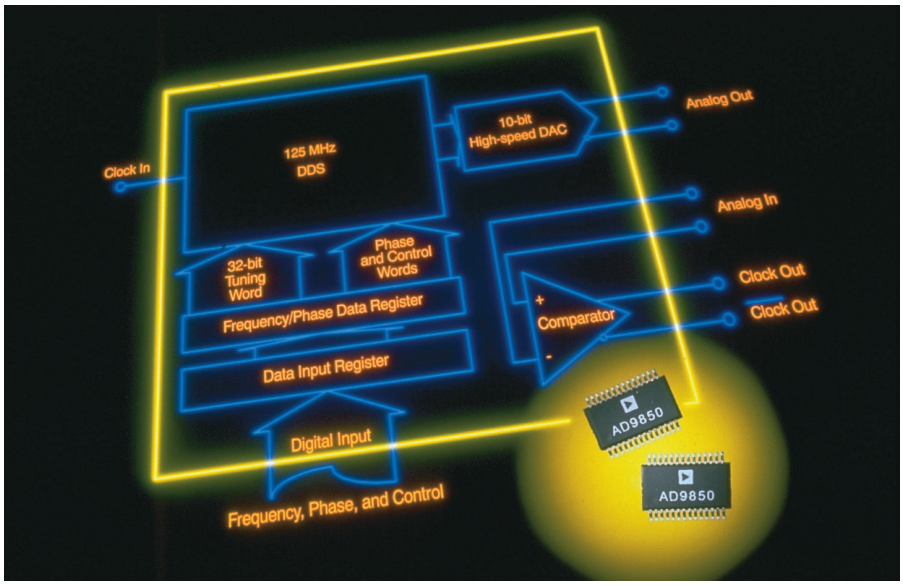


AD 9850 DDS block diagram. (Courtesy of Analog Devices, Inc.)

away from the center frequency should be 90 dB lower than the center frequency output. In a sensitive receiver, phase noise will mask out a weak signal that would otherwise be detected.



## 7 High-Frequency Communication Modules

The performance of electronic communication circuits changes extensively with changes in frequency, especially when high frequencies are being used. One of the first things students ask when they come to an electronic communication class regards the frequency at which the circuit theory they have learned stops working. When do we have to start being concerned about **parasitics?** Specifically, when does a resistor stop behaving like a resistor, et cetera? At low frequencies, a resistor is a resistor, an inductor is an inductor, a capacitor is a capacitor, and a wire is a wire. At high frequencies, each of these components is an RLC circuit. An example of a resistor model at high frequencies is provided in Figure 24.

**Parasitic**
unwanted component of an electronic circuit that is a byproduct of fabrication, component assembly, or both

Why do these parasitics occur? Basically, the parasitic is an unwanted component of an electronic circuit that is a byproduct of fabrication, component assembly, or both. These unwanted parasitics can greatly change circuit operation (e.g. amplifiers, filters, oscillators) at higher frequencies by introducing oscillations, unwanted transient effects, and reduced bandwidth.

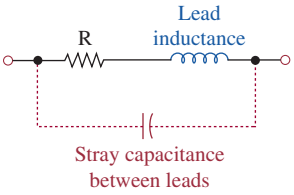


FIGURE 24 The resistor at high frequencies.

Typically, when the circuit element is small with respect to the wavelength of operation (e.g., 100 MHz, $\lambda = 3$ m), all the parasitic components affecting circuit operation are also small. If you change the frequency of operation to 1 GHz ($\lambda = 30$ cm, ~1 ft.), the parasitics become more significant with the shorter wavelength. If the R, L, and Cs are no longer looking like pure R, L, and Cs you have to worry about parasitic effects, and you have to be aware of transmission line effects and signal propagation effects.

This section addresses the following:

- how miniaturization of circuitry has changed electronic communication systems and printed circuit board assembly,
- general guidelines for assembling high-frequency circuits, and
- the use of Mini-Circuits® modules with three examples of using modular electronic systems to implement electronic communication circuitry.

The component size of electronic components is getting smaller, and this is beneficial to the implementation of high-frequency circuits because the parasitics are getting smaller with respect to the wavelength ($\lambda$). This reduction in component size is beneficial to the component, but you still have to get the signal into and out of the chip. Things such as lead inductance, the length of leads on the chip, the capacitance of the solder pad, and where the chip is inserted are very important. It is important to note that a resistor will look like an RL circuit if you have a long lead. Typically at higher frequencies, you don't use radial lead resistors, capacitors, and inductors. The better choice is to use chip resistors, capacitors, and inductors. Making this switch eliminates much of the long lead effect. It is also important to be careful about the placement of components on the board, the size of the solder pads, ensuring that the pads are not too large. This will keep the stray capacitance to the ground plane to a minimum.

There are many issues to consider when assembling a PC board for high-frequency operation. Issues of interest include the following:

1. At low frequencies, you connect the components with wires. As you go up in frequency those wires become transmission lines.
2. The length of the wires and the geometry of the wires becomes an issue, and you also have to be concerned about the characteristics impedance of the wire.
3. When you do a circuit board layout, you have to be concerned about bends because there will be parasitics at that bend. A general rule is to avoid sharp bends.
4. Connectors are also important because you have to launch the waves down the transmission line at high frequencies. At low frequencies, you can make the connections to electronic circuits with alligator clips. At high frequencies, you have to transition from some coaxial structure into a circuit board to properly launch the wave.
5. You have to make sure that your components are impedance matched to minimize ghosting within the circuit board. The connector has to be matched to the impedance of the line, the line has to have the correct impedance for the entire length, and the line has to be impedance matched to the component. Mismatched components, for example the IF port on the mixer, can generate spurious signals on the output of the mixer.

One of the key issues of laying out a printed circuit board in the 1-10 GHz frequency range is the spacing of the traces on the board. For example, if you are running parallel traces from connectors at the edge of the PC board to components on the board, you can experience problems with RF coupling between the lines. A rule of thumb for lines on printed circuit boards is that the traces should be at least four board thicknesses apart. For example, if the PC board is ~0.06″ thick, the traces should be spaced at ~0.240″. At that spacing, the coupling between the lines should be minimal (~40 dB down). If you change the spacing to one half the recommended spacing, for example ~.120″, you would get about 20-dB separation. You want a minimum of two board thickness spacing, or you will get crosstalk.

The other thing to remember is that the RF components (e.g., RF transistor, amplifier, oscillation) being mounted on the PC board require a DC bias circuit. The objective when placing the DC power supply on the printed circuit board is to make the DC power supply invisible to the RF circuit. RF chokes are used to isolate the DC circuit from the RF circuitry. The RF choke is typically an RF inductor with a high reactance to high frequencies while appearing as a short to the DC. Of course, the DC bias circuit must have ground so the end termination for the DC bias circuit is the DC return path. This is accomplished by connecting the DC return through an inductor (RF choke) to ground. You want indictors and capacitors to act reactive, not resistive, and you have to be sure that the RF choke is placed as close as possible to the RF circuit.

## Mini-Circuits® Modules

The Mini-Circuits® modules are an excellent way to experiment with circuits at higher frequencies. They are economical and fairly robust. The primary issue with Mini-Circuits® modules is that you have to be careful interconnecting the components. The circuits are designed to specifications provided in either the online literature or

a print catalog. When working with a Mini-Circuits® module, such as a VCO, you have to be aware of the required bias voltage range and what voltage can cause damage. Additional specifications to check could be the output power, isolation for the VCO, and what VSWR it can handle at its output port. For example, if the output power is 10 mW (10 dBm) can the device handle an open circuit load with a VSWR of infinity? This can be of extreme importance when troubleshooting the system, connecting and disconnecting the modules.

Another example of a Mini-Circuits® module is a mixer circuit. When using mixer circuits, you have to make sure you are providing the correct RF drive level to bias the internal diodes and to obtain optimum conversion loss. The **conversion loss** is the change in signal level from the RF frequency to the IF frequency. In order to get the cited values of conversion loss, you have to provide the correct local oscillator (L.O.) drive level recommended in the manufacturer specification, but you also have to be careful not to exceed the recommended drive level for the system. This can cause unwanted frequencies to be generated within the device. It is also recommended that you measure the output power of your L.O. before connecting it to the L.O. port of the mixer. The other thing you have to verify is the RF drive level. Typically, the L.O. drive level to the mixer is between +7 and +10 dBm, and the maximum RF signal level is typically between 0 and −2 dBm. The RF signal level has to be less than the L.O. drive for the mixer to function properly.

**Conversion Loss**
the change in signal level from the RF frequency to the IF frequency

It is also recommended that you check your bias voltages, your tuning voltages, and your output power. If your output power is too large, you will have to use an attenuator to reduce the power level. You must buy an attenuator that provides the desired attenuation for the frequency specified with matched loads (e.g., 50 Ω or 75 Ω).

## AM Modulation

The first example using a Mini-Circuits® module is with AM modulation. The AM modulation circuit demonstrated in this section uses the Mini-Circuits® ZAS-3 electronic attenuator shown in Figure 25. This is a pin diode attenuator (called an *electronic attenuator*) with an operating frequency range of 5–450 MHz. The recommended maximum input power is +15 dBm, and the module can have an input power of +30 dBm without damage.



FIGURE 25 The ZAS-3 attenuator. (Courtesy of Mini-Circuits®: www.minicircuits.com.)

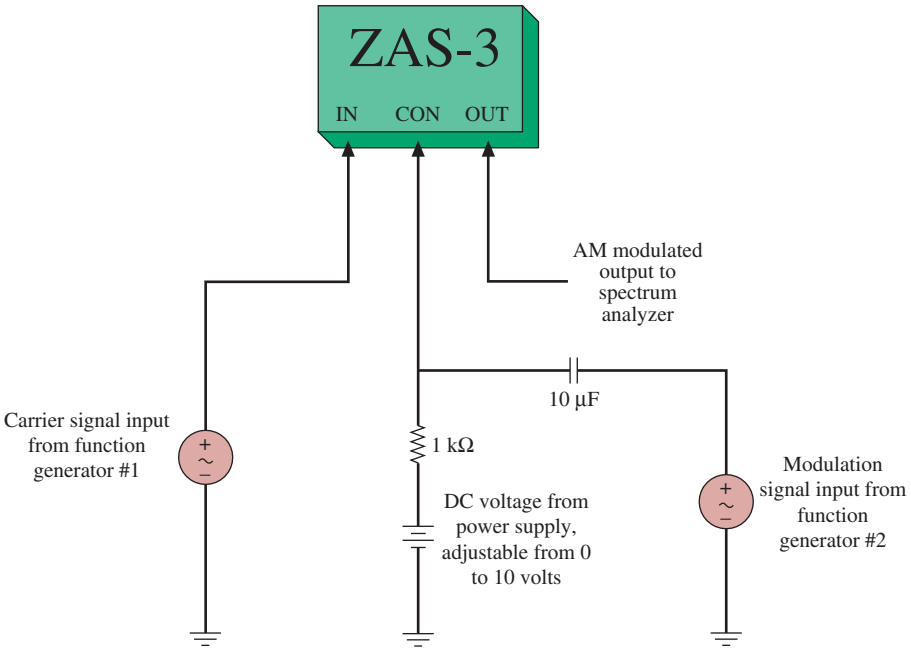


**FIGURE 26** The connections for the ZAS-3 attenuator when used as an AM modulator.

The connection diagram for the ZAS-3 when used in AM circuit generation is provided in Figure 26. A l–200-MHz carrier signal is applied to the "IN" input.

The suggested biasing for the control port input (CON) is provided in Figure 27. Changing the DC bias current from 0 mA to 10 mA changes the attenuation between the "IN" and "OUT" ports from about 60 dB (maximum) to 1 dB (minimum). In order to produce an amplitude modulated signal, a carrier signal is applied to the input port. The modulating signal is applied to the control port. The modulated signal is then produced at the output port.

## Frequency Modulation

This section demonstrates the generation of a frequency modulated signal using the Mini-Circuits® ZX95-100 VCO shown in Figure 28. The ZX95-100 is a voltage

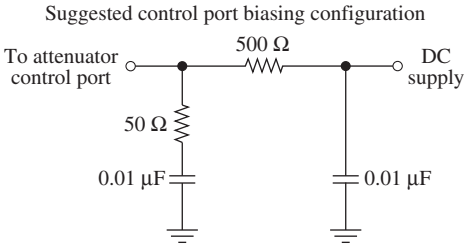


**FIGURE 27** The suggested biasing for the ZAS-3 control port. (Courtesy of Mini-Circuits®: www.minicircuits.com.)

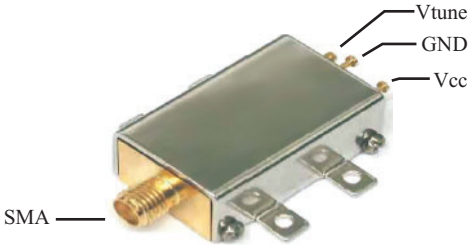


**FIGURE 28** The Mini-Circuits ZX95-100 voltage controlled oscillator. (Courtesy of Mini-Circuits®: www.minicircuits.com.)

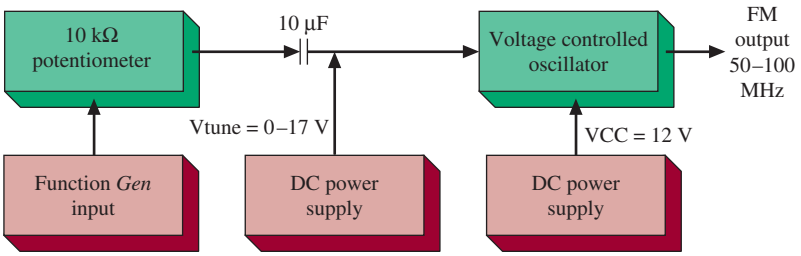


FIGURE 29 The suggested connection diagram for using the ZX95-100 for generating an FM signal. (Courtesy of Mini-Circuits®: www.minicircuits.com.)

controlled oscillator that can be tuned from 50 MHz to 100 MHz by changing the voltage applied to the "Vtune" port from 0.5 to 17.0 volts. Another DC voltage of +12.0 V must be applied to VCC. The modulating signal connects through a l0 kΩ (10-turn) potentiometer and a 10-$\mu$F capacitor as shown in Figure 29.

The FM output from the VCO is taken from the ZX95-100's female SMA connector. The center frequency for the FM signal is controlled by adjusting the DC voltage applied to the **Vtune** input. The deviation constant for the ZX95-100 VCO is approximately 4 MHz/V.

## Mixer Circuit

The last Mini-Circuits® module presented in this section is the Mini-Circuits® ZP-3 mixer. The mixer circuit is one of the most important components in electronic communications. Remember, a mixing circuit produces the sum and the difference frequencies on its output. This is based on the following trigonometric relationship:

$$(\sin A) \times (\sin B) = 0.5 \cos (A - B) - 0.5 \cos (A + B)$$

This relationship shows that both the sum and differences for the *A* and *B* frequencies are produced. A mixer circuit, such as the Mini-Circuits® ZP-3 shown in Figure 30 can be used to provide up and down conversion of frequencies.

An upconverter uses a mixer circuit to output the sum in the input and local oscillator frequencies. A downconverter uses a mixer circuit to output the differences in the input and local oscillator frequencies. A suggested connection diagram for the ZP-3 is provided in Figure 31.

In order to minimize conversion loss between frequencies, the local oscillator power (terminal R) usually needs to be at least +5 dBm. In order to avoid distortion,

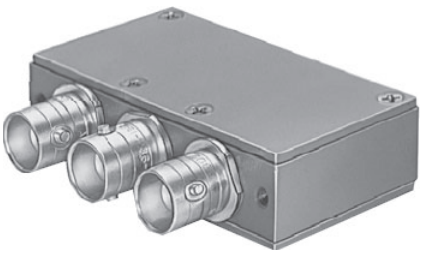

FIGURE 30 The Mini-Circuits® ZP-3 mixer circuit. (Courtesy of Mini-Circuits®: www.minicircuits.com.)

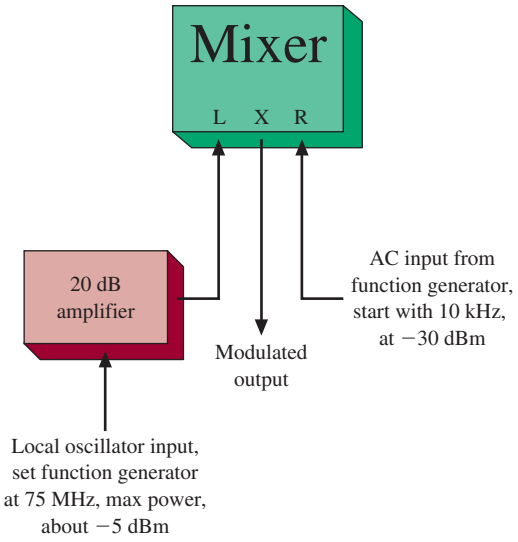


FIGURE 31 The suggested connection diagram for the ZP-3.

the input frequency (terminal L) needs to be less than or equal to –20 dBm. The theoretical mixer conversion loss is 6 dB. This means that if the input power is –20 dBm, the output power will be –26 dBm.



## 8 TROUBLESHOOTING

Transceivers, or two-way radios, are found in many commercial applications. In this section we will look at troubleshooting the transmitter portion of a mobile transceiver. General troubleshooting techniques are presented in this section. You should always consult the service manual before disassembling a transceiver and making any adjustments or repairs on it.

Today's communication equipment usually includes digital logic circuits to control various functions. We will learn to troubleshoot some basic logic circuits. We'll also consider troubleshooting a frequency synthesizer.

After completing this section you should be able to

- Describe the signal flow in a mobile FM transmitter circuit
- Describe common mobile transmitter failures
- Troubleshoot basic logic circuits
- Troubleshoot a frequency synthesizer

### TRANSCEIVER TRANSMITTER

The block diagram in Figure 32 depicts the transmitter portion of a mobile transceiver. Mobile transmitters may differ somewhat in design. For example, this particular transmitter uses several frequency multiplier circuits in the exciter stage to step up the frequency to the necessary operating frequency. A press-to-talk microphone feeds the voice signal into an audio amplifier. The voice signal is

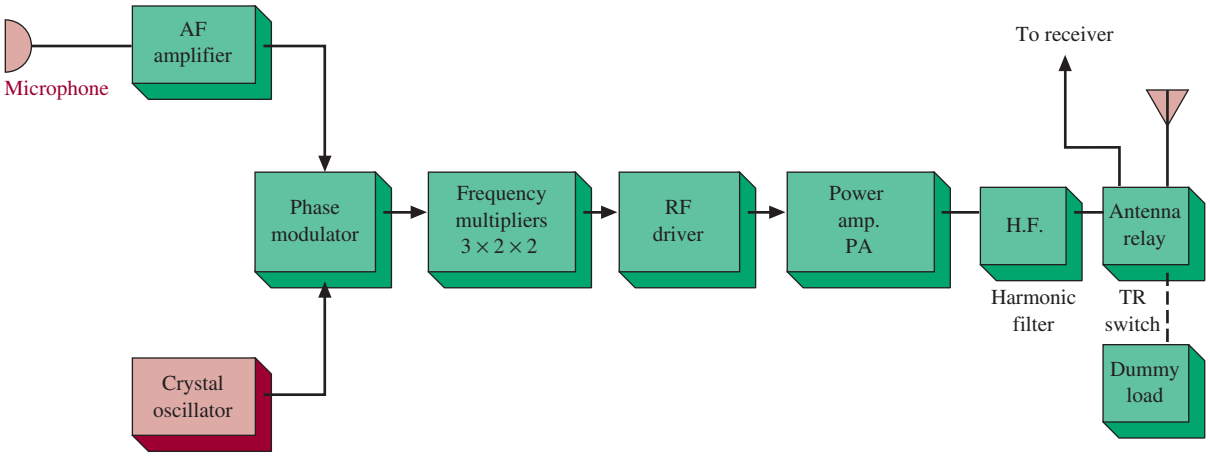


FIGURE 32 Block diagram of a mobile FM transceiver, transmitter portion.

amplified and sent to the phase modulator. The phase modulator is also fed by a crystal-controlled oscillator. The signal driving the power amplifier is FM from the phase modulator that has been amplified and multiplied in frequency by the exciter stage. The power amplifier delivers a specified output power to the antenna via the harmonic filter and the antenna-switching relay. Typical output power ratings are 20 to 25 W.

## Transmitter Troubles

Transmitter troubles fall into several categories: low-power output, exciter troubles, oscillator troubles, power amplifier troubles, transmit-receive (TR) antenna-switching relay problems, modulator troubles, and microphone-associated problems. We will look at some of these common transmitter troubles in the following discussion.

1. Microphone and Audio Troubles Microphone failures are more often the problem in mobile radios than audio amplifiers. This is true because of the extensive use the microphones get. In addition, these radios are exposed to temperature extremes and moisture. Being subject to these weather conditions will cause the microphone's cords to become stiff and brittle. Flexing the cord may damage the insulation or cause the cord to break at its plug. Solder connections can become poor conductors over a period of time and weathering. Press-to-talk switches become contaminated and corroded from dirt and moisture. These switches get a tremendous amount of use, and often the internal contacts fail to make good connection. An inoperative microphone and its cord should be replaced.

2. Modulator Troubles A common modulator problem is low modulation. This low modulation reduces the transmitter's operational range. Leaky coupling capacitors, open bypass capacitors, and off-tolerance resistors are likely candidates in the modulator circuits that can reduce the modulation level. Check bias resistors in the transistor circuits of the modulator.

**3. TR Switching Troubles** The TR switch is responsible for switching the antenna between the transmitter and the receiver in the transceiver radio. By this switching action a common antenna is shared by both the receiver and the transmitter. Absence of RF power at the antenna could be due to contact trouble in the antenna-switching relay. Figure 28 shows a typical antenna-switching relay, K601. Notice the contact switching positions. A defective relay can usually be checked by pressing on the contacts using a plastic wand while keying the transmitter. If the relay works with pressure applied, then it should be replaced. Cleaning the contacts may work if the relay points are not pitted.

**4. PA Troubles** The presence of a strong exciter output, but the absence of a signal or a weak signal at the power-amplifier output, indicates power-amplifier troubles. A very common cause for this missing output is blown output transistors. Output transistors can blow from not being terminated and from impedance mismatches with the antenna or dummy load. Never key a transmitter unless it is connected to the antenna or the dummy load. For no- or low-output power check the transistors. If the transistors are not bad, look for passive components that might be defective and for changes in resistor values.

**5. Oscillator Troubles** Improper tuning of the oscillator stage may cause unstable transmitter operation. Sometimes a tank inductance is varied in the oscillator circuit. In other circuits, the tank is fixed and a capacitor may be used to trim the frequency. Improper tuning in either case can put the oscillator at the edge of stable or unstable operation. Weak crystals will cause the oscillator's output to decrease. The weak crystal may even shut the oscillator down completely. Verify the oscillator's operation by monitoring the transmitter output or by measuring the voltage at a frequency multiplier test point. Note any changes in frequency at the transmitter's output or any voltage variations at the test point. Consult the service manual for specific steps to repair, adjust, and replace crystals.

## Logic Problems

Today's receivers and transmitters usually utilize a good bit of digital logic. When troubleshooting any digital circuit, the technician will first look to see if minimum logic levels are being met. The voltage levels do vary for many of today's logic circuits, but we will assume that the parts are operating from a +5-V supply. The part is guaranteed to output at least 2.4 V (logic one) and less than 0.4 V for a logic zero. Current ratings go with the voltages that guarantee the number of loads a gate can drive.

The part is guaranteed to accept any voltage more than 2.0 V as a logic one on its input, point A or B. The gate is guaranteed to accept any input voltage less than 0.8 V as a logic zero.

Note that the part is guaranteed to give more than it requires, 2.4 V versus 2.0 V. This is done so that there is a guaranteed margin to allow for age and noise. It sounds simple.

Now the technician has to understand what the circuit should do functionally. The best sources of help are a good manual, a set of schematics, and experience. Modern logic circuits are challenging, but a good block diagram, example logic diagrams, and good test gear can help you solve the problem.

***Logic Zero Incorrect*** To place a logic zero on the TTL gate's input, we must draw a small amount of current from the gate. If the part driving the gate cannot do this, the voltage will not fall in the guaranteed region and the gate will not know what to do.

It is also possible that the gate input has shorted to the supply. In this case it is impossible for any output stage to drive the bad input. You will have to change one or the other or both. Which one? See if other gates in that IC are working. Is one hot? It might be the bad one.

***Logic One Incorrect*** This is exactly the opposite of the above problem. TTL is guaranteed to supply 40 $\mu$A. If one of the diodes in the following gate is shorted, the gate will not be able to output the required 2 V the next gate requires to function. Again, it is difficult to tell which gate is malfunctioning, input or output. You will have to make an educated guess and change one.

## Synthesizer Problems

Figure 14 is a block diagram of a synthesizer found in many communications receivers. The output of the VCO is connected to the first mixer to set the receiver frequency. Here are some typical troubles.

1. *Small frequency error:* Check the frequency of the oscillator. Remember, error at the oscillator is multiplied by *N*.
2. *Large frequency error:* Is the loop locked? Probably not. Look at the output of the phase comparator. If the loop is not locked, you will see a waveform that is the difference in the divider output and the reference oscillator. Check components in the VCO and look at logic levels in the divider. Check to see that the division ratio is correct.
3. *No output at all:* A failure in the system may drive the varactor in the VCO to some condition that will not allow oscillations. You might isolate the VCO from the low-pass filter. Check all VCO components.



## 9 Troubleshooting with Electronics Workbench™ Multisim

In this section, we first review the concept of a multiplier circuit or, as it is sometimes called, a mixer. Open **Fig7-33** at www.pearsoned.com/electronics. In this circuit, 20- and 21-MHz sine waves are being input into a mixer stage. The circuit is shown in Figure 33. Recall that when two frequencies are mixed together, we should see the sum and differences of the *A* and *B* frequencies at the output of the mixer stage.

$$\sin A \times \sin B = 0.5 \cos (A - B) - 0.5 \cos (A + B)$$

Start the simulation and examine the output of the mixer with the oscilloscope. You should see a complex signal containing the product of the *A* and *B* frequencies. The oscilloscope trace of the complex signal is shown in Figure 34. The figure shows a high-frequency sine wave riding on top of a lower frequency sine wave. Use the oscilloscope to measure the period and determine the frequency of each sine-wave

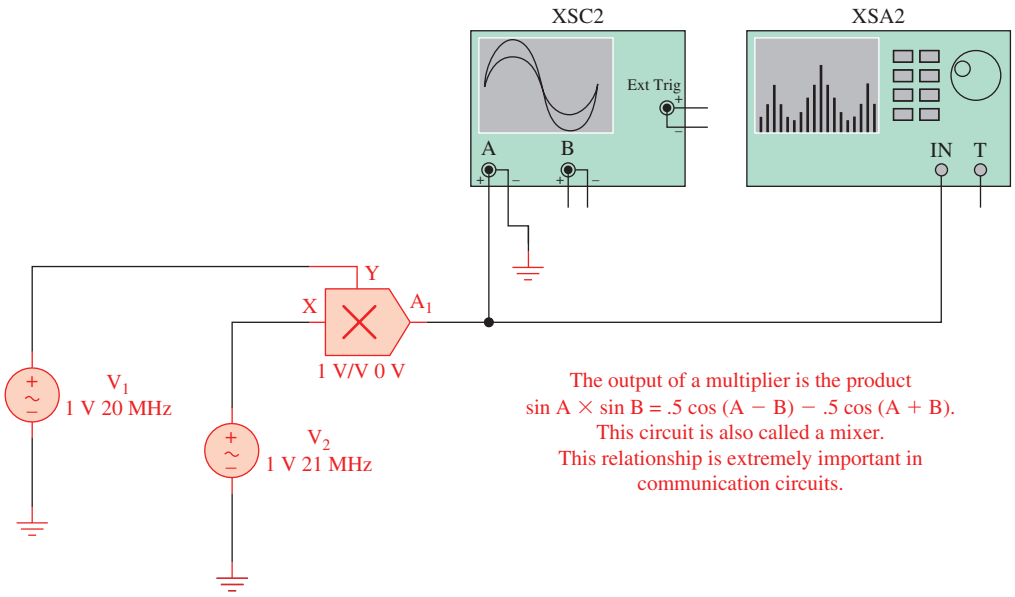


FIGURE 33 The mixer circuit as implemented with Multisim.

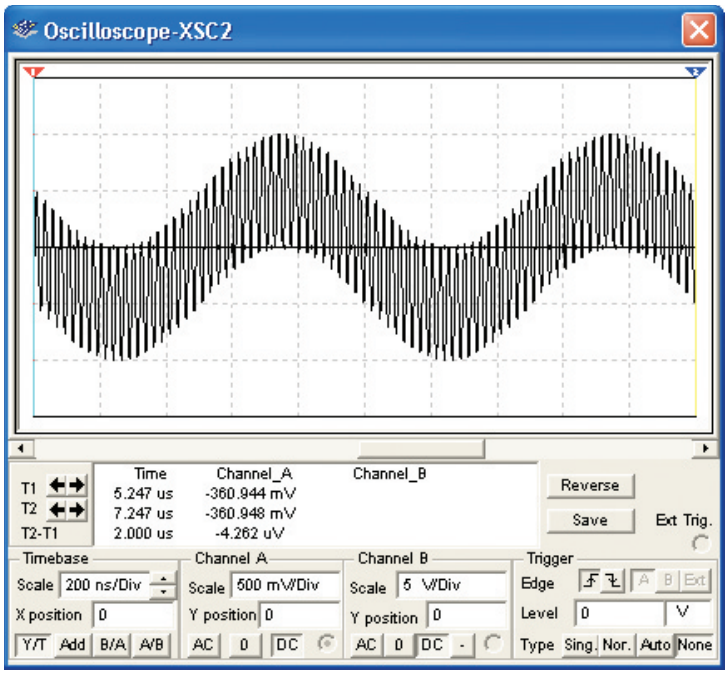


FIGURE 34 The output of the mixer as viewed with an oscilloscope. The input frequencies to the mixer are 20 and 21 MHz.

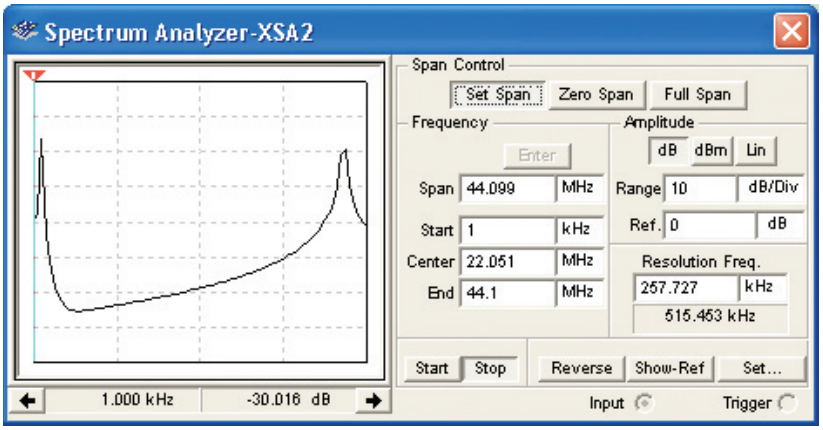


FIGURE 35 The output of the mixer as viewed by a spectrum analyzer.

component. You should find that this complex signal contains a 1-MHz and a 41-MHz component.

You can use the spectrum analyzer to verify the frequency components at the output of the mixer. Start the simulation and double-click on the spectrum analyzer module. You should see a spectral display similar to that shown in Figure 35.

Use the cursor on the spectrum analyzer to measure the frequency components. You will find that the spectral output of the mixer stage contains a 1-MHz and a 41-MHz component, as predicted by the sin $A \times \sin B$ equations and by the analysis with the oscilloscope.

Change the input frequencies so that both inputs are 20 MHz and the amplitudes of each sine wave are equal. What trace do you expect to see on the oscilloscope and on the spectrum analyzer? Start the simulation and see if you are correct. You should find that the oscilloscope shows a 40-MHz sine wave and the spectrum analyzer shows a 40-MHz frequency component. We are seeing the $A + B$ frequency term, whereas the $A - B$ frequency term is zero.

The next exercise provides an opportunity to experiment with a squelch circuit, as implemented with Multisim. Squelch circuits are commonly used in communication receivers to turn off (squelch) the output signal when the signal strength of the received signal is low and noisy or not present. This minimizes annoying noise problems when listening to radio transmissions as they are keyed on and off. Open **Fig7-36** at www.parsoned.com/electronics to experiment with the squelch circuit.

The input audio signal for the squelch circuit, shown in Figure 36, is provided by a 2-kHz sine-wave generator. This signal feeds an amplifier stage and an automatic gain control (AGC) circuit. The AGC circuit uses a simple half-wave rectifier and an RC filter to provide the AGC voltage. The AGC voltage is fed to a 1-kΩ potentiometer that provides squelch adjustment. The signal from the potentiometer feeds two inverters whose outputs are connected to an analog switch, which connects the audio signal to the output amplifier. If sufficient AGC voltage is present (indicating a strong signal), the analog switch will be turned on and the 2-kHz audio signal is passed through to the output amplifier. If the AGC voltage is low or not present (indicating a poor-quality signal or no carrier), the

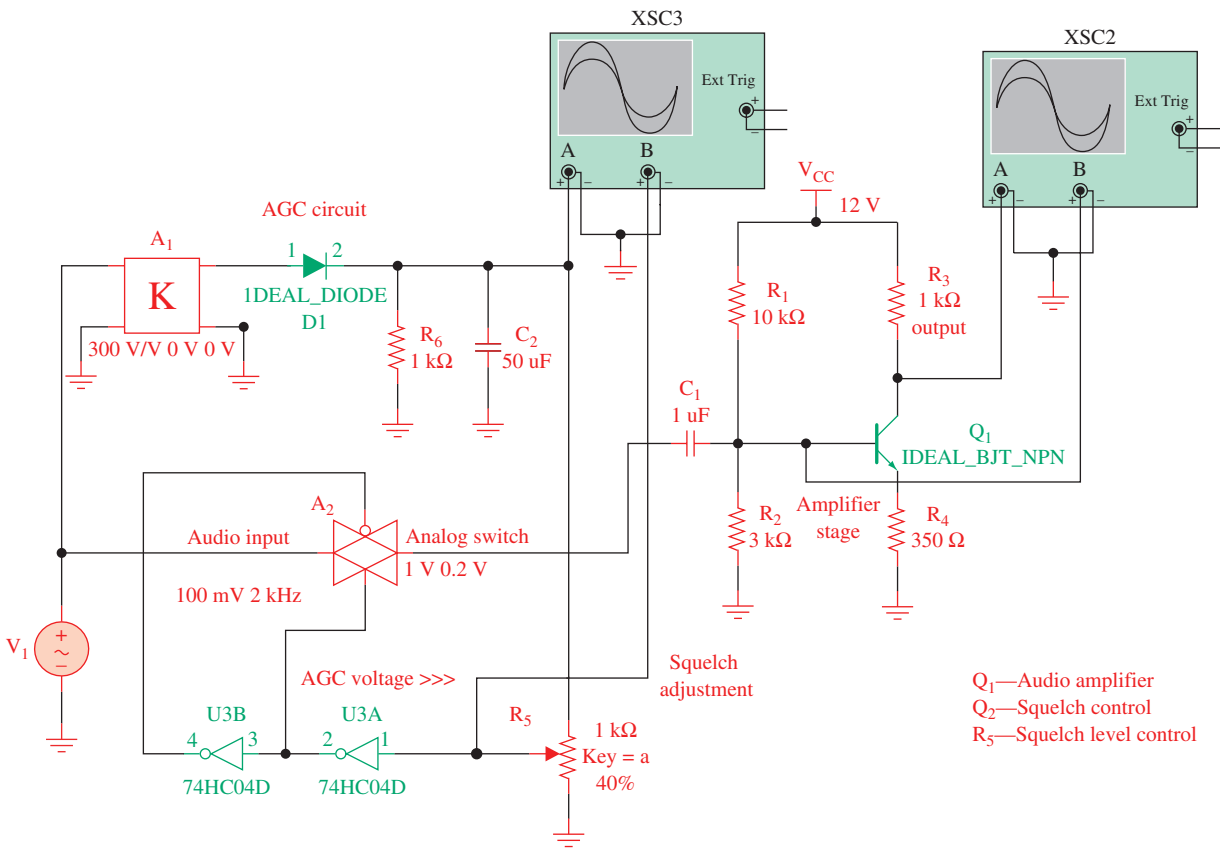


FIGURE 36 An example of a squelch circuit as implemented with Multisim.

analog switch is turned off. This disconnects the 2-kHz audio signal from the output amplifier.

Start the simulation and double-click on the oscilloscope (XSC2) to view the amplifier output. You should see a sine wave on both the input (Ch. B) and output (Ch. A) of the amplifier stage. A virtual potentiometer has been provided for squelch-level adjustment. It should be set to 40 percent. You can squelch the 100-mV sine wave by adjusting the squelch control to 0 percent. To adjust the squelch level, press *a* to decrease and *A* to increase the resistance of the potentiometer.

Return the squelch setting to 40 percent, stop the simulation and change the sine-wave input level from 100 mV to 10 mV. This change simulates a weak receive signal. A squelch control setting of 40 percent will reject weak signals. Verify this by starting the simulation and viewing the signals on the oscilloscope. The oscilloscope will show a flat line or no signal with the control set to 40 percent. Change the squelch control to 50 percent, and the signals should return. Returning the squelch control to 40 percent will reject the signal. In other words, you now have adjustable squelch control.

Experiment with this circuit. Use the multimeter to examine voltage levels throughout the circuit. View the output of the AGC circuit with the oscilloscope. View both the AC and DC components to understand the AGC signal better.

## Electronics Workbench™ Exercises

1. Open the file **FigE7-1** at www.parsoned.com/electronics. You have discovered that this squelch circuit is not working. Troubleshoot the squelch circuit to determine the cause of the failure. Correct the fault and rerun the simulation. Report on your findings.
2. Open the file **FigE7-2** at www.parsoned.com/electronics. You have been told that this squelch circuit is working but does not have the range of control that it previously had. Troubleshoot the squelch circuit to determine the cause of the failure. Correct the fault and rerun the simulation. Report on your findings.
3. Open the file **FigE7-3** at www.parsoned.com/electronics. You discovered that the squelch circuit is not working. You suspect that an employee at the facility dropped a screwdriver into the receiver cabinet while power was on. Troubleshoot the squelch circuit to determine the cause of the failure. Correct the fault(s) and rerun the simulation. Report on your findings.



## Summary

In this chapter we described various improvements to receiver design and discussed some of the more complicated specifications used in high-quality receivers. The concept of spread-spectrum communications was also introduced. The major topics you should now understand include the following:

- the analysis of advanced techniques for image frequency reduction, including double conversion and up-conversion
- the description and explanation of special techniques for improving receiver operation, including delayed AGC, auxiliary AGC, manual sensitivity control, variable notch filters, ANL circuits, and squelch control
- the analysis of the relationship among noise, sensitivity, and dynamic range in a high-quality receiver
- the analysis of intermodulation distortion (IMD) testing
- the description and analysis of various frequency synthesizers
- the method used to obtain direct digital synthesis (DDS) systems
- the analysis of spread-spectrum techniques, including description of CDMA, frequency hopping, time hopping, and direct sequence



## Questions and Problems

### Section 2

1. Explain the difference between an FM stereo receiver and a communications transceiver.
2. Draw a block diagram for a double-conversion receiver when tuned to a 27-MHz broadcast using a 10.7-MHz first IF and 1-MHz second IF. List all pertinent frequencies for each block. Explain the superior image frequency

characteristics as compared to a single-conversion receiver with a 1-MHz IF, and provide the image frequency in both cases.

3. Draw block diagrams and label pertinent frequencies for a double-conversion *and* up-conversion system for receiving a 40-MHz signal. Discuss the economic merits of each system and the effectiveness of image frequency rejection.
4. A receiver tunes the HF band (3 to 30 MHz), utilizes up-conversion with an intermediate frequency of 40.525 MHz, and uses high-side injection. Calculate the required range of local oscillator frequencies. (43.5 to 70.5 MHz)
5. An AM broadcast receiver's preselector has a total effective $Q$ of 90 to a received signal at 1180 kHz and uses an IF of 455 kHz. Calculate the image frequency and its dB of suppression. (2090 kHz, 40.7 dB)

## Section 3

6. Discuss the advantages of delayed AGC over normal AGC and explain how it may be attained.
7. Explain the function of auxiliary AGC and give a means of providing it.
8. Explain the need for variable sensitivity and show with a schematic how it could be provided.
9. Explain the need for variable selectivity. Describe how VBT is accomplished if the oscillator in Figure 8 is changed to 2650 Hz.
10. What is the need for a noise limiter circuit? Explain the circuit operation of the noise limiter shown in Figure 9.
11. List some possible applications for *metering* on a communications transceiver.

*12. What is the purpose of a squelch circuit in a radio communications receiver?

13. List two other names for a squelch circuit. Provide a schematic of a squelch circuit and explain its operation. List five different squelch methods.
14. Describe the effects of EMI on a receiver.
15. Describe the operation of an automatic noise limiter (ANL).

## Section 4

16. We want to operate a receiver with NF = 8 dB at $S/N$ = 15 dB over a 200-kHz bandwidth at ambient temperature. Calculate the receiver's sensitivity. (−98 dBm)
17. Explain the significance of a receiver's 1-dB compression point. For the receiver represented in Figure 11, determine the 1-dB compression point. (≅10 dBm)
18. Determine the third-order intercept for the receiver illustrated in Figure 11. (≅ +20 dBm)
19. The receiver described in Problem 16 has the input/output relationship shown in Figure 11. Calculate its dynamic range. (78.7 dB)
20. A receiver with a 10-MHz bandwidth has an $S/N$ of 5 dB and a sensitivity of −96 dBm. Find the required NF. (3 dB)

* An asterisk preceding a number indicates a question that has been provided by the FCC as a study aid for licensing examinations.



## Section 5

21. Explain the operation of a basic frequency synthesizer as illustrated in Figure 14. Calculate $f_0$ if $f_R = 1$ MHz and $N = 61$. (61 MHz)
22. Discuss the relative merits of the synthesizers shown in Figures 16(a), (b), and (c) as compared to the one in Figure 14.
23. Describe the operation of the synthesizer divider in Figure 17. What basic problem does it overcome with respect to the varieties shown in Figures 14 and 16?
24. Calculate the output frequency of a synthesizer using the divider technique shown in Figure 17 when the reference frequency is 1 MHz, $A = 26$, $M = 28$, and $N = 4$. (138 MHz)
25. Determine the output frequency for the synthesizer of Figure 19 when the input code is 100011. (27.245 MHz)
26. Explain the operation of the UHF multifrequency receiver of Figure 22.

## Section 6

27. Briefly explain DDS operation based on the block diagram shown in Figure 23.
28. A DDS system has $f_{CLK\ MAX} = 60$ MHz and a 28-bit phase accumulator. Calculate its approximate maximum output frequency and frequency resolution when operated at $f_{CLK\ MAX}$. (24 MHz, 0.223 Hz)

## Section 7

29. Define parasitics.
30. What are the five basic issues to consider when assembling a printed circuit board for use at high frequency?
31. Why are sharp turns an issue when laying out printed circuit board traces?
32. What should be the spacing for parallel lines on the printed circuit board if the printed circuit board is 0.08″ thick?
33. What is the purpose of an RF choke?

## Section 8

34. Explain how the technician would know that the AF amplifier in Figure 32 lost its gain.
35. Describe a possible output that leads the technician to suspect that the problem is in the frequency multipliers of Figure 32.
36. What are some of the problems that can occur in the FM transceiver of Figure 32 from a bad oscillator?
37. Describe the output if the harmonic filter in Figure 32 was leaky.

## Questions for Critical Thinking

38. Describe the process of up-conversion. Explain its advantages and disadvantages compared to double conversion.

39. You have been asked to extend the dynamic range of a receiver. Can this be done? What factors determine the limits of dynamic range? Can they be changed? Explain.
40. In evaluating a receiver, how important is its ability to handle intermodulation distortion? Explain the process you would use to analyze a receiver's ability to handle this distortion. Include the concept of third-order intercept point in your explanation.
41. The receiver in Problem 19 has a 6-dB NF preamp (gain = 20 dB) added to its input. Calculate the system's sensitivity and dynamic range. (−99.94 dBm, 66.96 dB)



*This page intentionally left blank*

# DIGITAL COMMUNICATIONS
## CODING TECHNIQUES

From *Modern Electronic Communication*, Ninth Edition, Jeffrey S. Beasley, Gary M. Miller. Copyright © 2008 by Pearson Education, Inc. Published by Prentice Hall. All rights reserved.

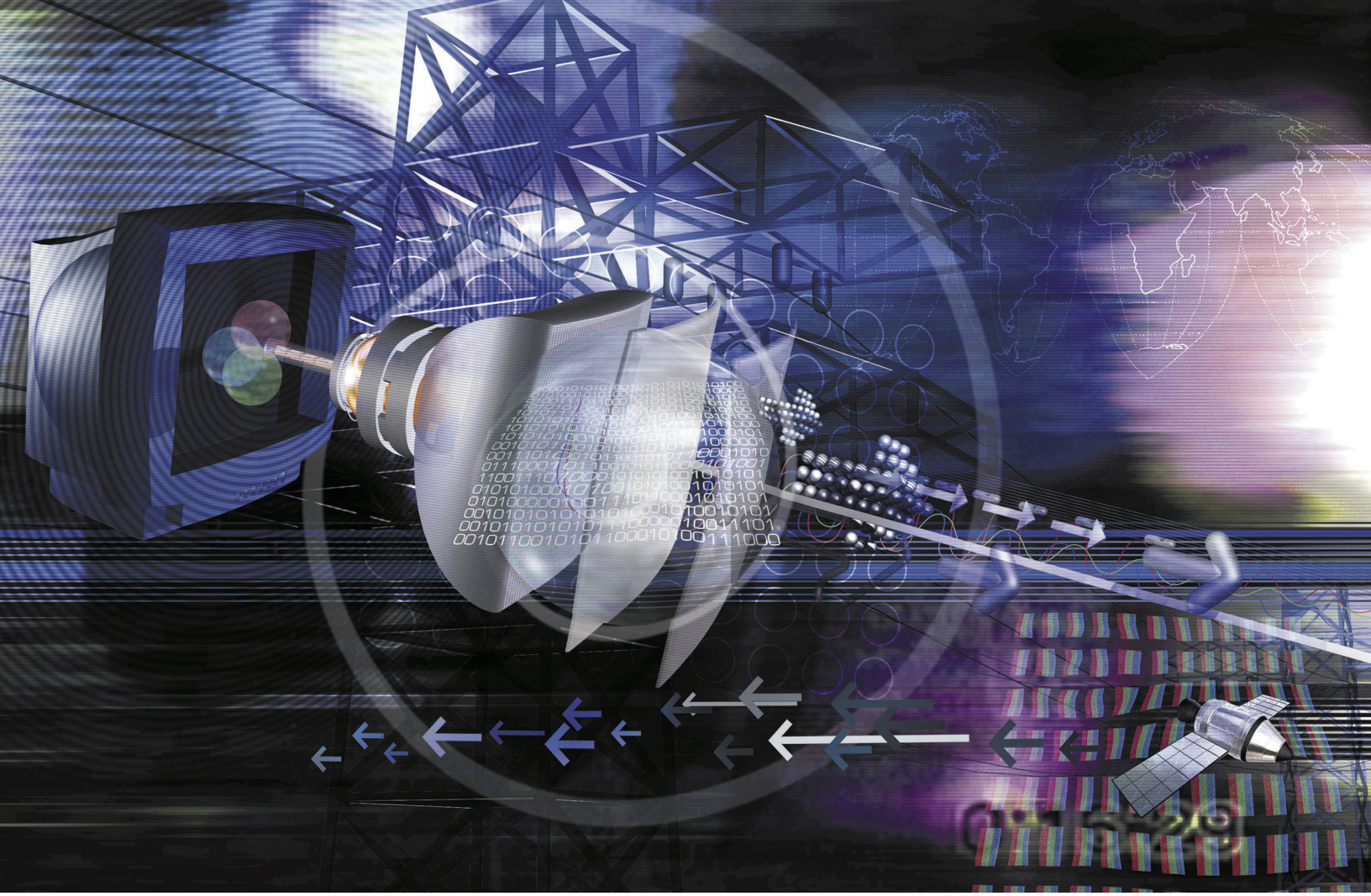

## Chapter Outline

1 Introduction
2 Alphanumeric Codes
3 Pulse-Code Modulation
4 Digital Signal Encoding Formats
5 Coding Principles
6 Code Error Detection and Correction
7 Digital Signal Processing
8 Troubleshooting
9 Troubleshooting with Electronics Workbench™ Multisim

## Objectives

- Describe the quantization process in a PCM system in terms of how it is created, how to determine the Nyquist sampling frequency, and how to define quantization levels
- Determine the dynamic range and signal-to-noise ratio of a PCM system
- Describe the common digital signal encoding formats
- Understand the concept of Hamming distance as applied to the technique of error detection and correction
- Describe the various techniques for code error detection and correction, including parity, block check character, cyclic redundancy check, Hamming code, and Reed–Solomon codes
- Describe Digital Signal Processing, the purpose of the difference equation, and illustrate the computational process of a DSP algorithm

# DIGITAL COMMUNICATIONS

## CODING TECHNIQUES




The Rohde & Schwarz Universal Radio Communications Tester CMU200. (Courtesy of Rohde and Schwarz, Inc.)

## Key Terms

regeneration
digital signal processing algorithms
ASCII
parity
EBCDIC
Baudot code
Gray code
acquisition time
aperture time
natural sampling
flat-top sampling
Nyquist rate
aliasing, or foldover distortion
antialiasing filter
quantization
quantile
quantile interval
quantization levels
quantizing error
quantizing noise
dynamic range
uniform quantization level
linear quantization level
nonlinear coding
nonuniform coding
idle channel noise
amplitude companding codec
multilevel binary
Hamming distance
minimum distance ($D_{min}$)
symbol substitution
block check character (BCC)
longitudinal redundancy check (LRC)
cyclic redundancy check
BCC
systematic code
($n$, $k$) cyclic code
generating polynomial
syndrome
forward error-correcting
Hamming code
interleaving
difference equation
recursive or iterative
IIR filter
nonrecursive
FIR filter



# 1 INTRODUCTION

The field of digital and data communications has experienced explosive growth in recent years. In general, this field includes the transfer of analog signals using digital techniques and the transfer of digital data using digital and/or analog techniques. It is difficult to separate the two topics totally because of their interrelationships.

Digital communications is the transfer of information in digital form. As shown in Figure 1, if the information is analog (voice in this case), it is converted to digital for transmission. At the receiver, it is reconverted to analog. Figure 1 also shows a digital computer signal transmitted to another computer. Notice that this is shown to represent both digital and data communications. The third system in Figure 1 shows a computer's digital signal converted to analog for transmission and then reconverted to digital by the modem. The reason that various techniques are used boils down to performance and cost, which will be apparent as we take a close look at the systems involved.

The move to digital and/or data communications is due to several factors. It is occurring despite the increased complexity and bandwidth necessary for transmission. Noise performance is one of two major advantages. Consider an analog signal with an instantaneous received value of 1 mV. If at the same time an instantaneous 0.1-mV noise spike changes the received value to 1.1 mV, there is normally no way of knowing the correct value of the signal. In a digital system, however, the received signal may ultimately be changed to either a logical 0- or 1-V level. Now the received noise of 0.1 mV may still be there but certainly would not cause an error.

The digital system can re-create the original signal by having circuits that change any signal below 0.5 V into the 0-V level and any signal above 0.5 V into

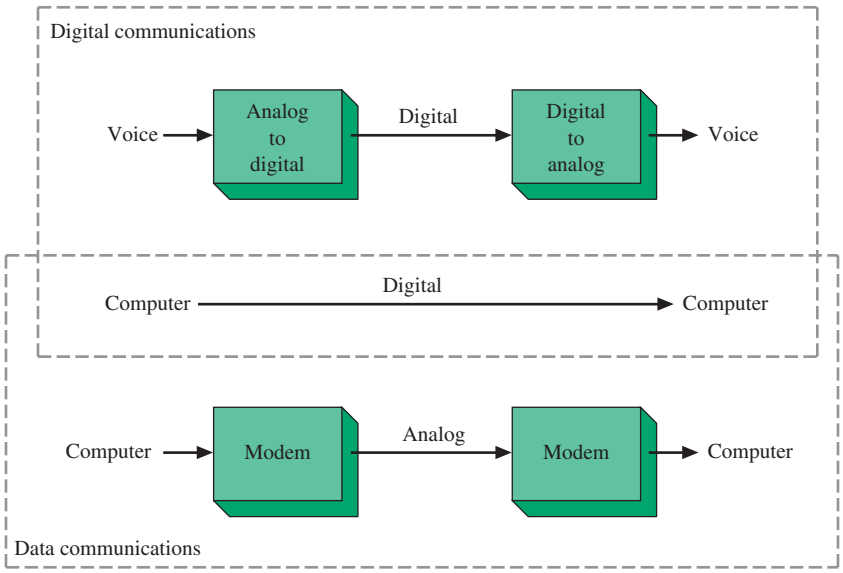


FIGURE 1 Digital/data communications.

the 1-V level. This ability to restore a noise-corrupted signal to its original value is called **regeneration.** Obviously, if the noise is so great as to cause the 0-V level to be seen as a 0.6-V level, an error will occur.

Another advantage of using a digital format involves the ability to process the signal at the transmitter (preprocessing) and/or the receiver (postprocessing). Both of these operations are termed **digital signal processing.** Signals in digital format can be stored in computer memory and be easily manipulated by **algorithms**—a plan or set of instructions followed to achieve a specific goal. They can be implemented by digital circuitry, which is a *hardware* solution. Increasingly, they are implemented by *software* instructions (via a *computer program*) that instruct a microprocessor how to perform specific manipulations. Many communications systems use *microcontrollers* that are microprocessors programmed to do one basic task only.

**Regeneration**
restoring a noise-corrupted signal to its original condition

**Digital Signal Processing**
using programming techniques to process a signal while in digital form

**Algorithms**
a plan or set of instructions to achieve a specific goal



## 2 Alphanumeric Codes

The most common alphanumeric coding scheme for binary data is the American Standard Code for Information Interchange (ASCII). The Extended Binary-Coded Decimal Interchange Code (EBCDIC) is still used in large computing systems but sees little use in digital communication systems.

### The ASCII Code

**ASCII** is a 7-bit code used for representing alphanumeric symbols with a distinctive code word. The ASCII code was developed by a committee of the American National Standards Institute (ANSI) for the purpose of coding binary data. ASCII-77 is the adopted international standard. Figure 2 provides a list of the codes.

**ASCII**
standardized coding scheme for alphanumeric symbols

There are $2^7$ (128) possible 7-bit code words available with an ASCII system. The binary codes are ordered sequentially, which simplifies the grouping and sorting of the characters. The 7-bit words are ordered with the least significant bit (lsb) given as bit 1 ($b_1$), while the most significant bit (msb) is bit 7 ($b_7$). Notice that a binary value is not specified by the code for bit 8 ($b_8$). Usually the bit 8 ($b_8$) position is used for parity checking. **Parity** is an error detection scheme that identifies whether an even or odd number of logical ones are present in the code word. This concept is discussed in greater detail in Section 6. For ASCII data used in a serial transmission system $b_1$, the lsb bit, is transmitted first.

**Parity**
a common method of error detection, adding an extra bit to each code representation to give the word either an even or odd number of 1s

The ASCII system is based on the binary-coded-decimal (BCD) code in the last 4 bits. The first 3 bits indicate whether a number, letter, or character is being specified. Notice that 0110001 represents "1," while 1000001 represents "A" and 1100001 represents "a." It uses the standard binary progression (i.e., 0110010 represents "2"), and this makes mathematical operations possible. Because the letters are also represented with the binary progression, alphabetizing is also achieved via binary mathematical procedures. You should also be aware that analog waveform coding is accomplished simply by using the BCD code for PCM systems covered in Section 3.

In some systems the actual transmission of these codes includes an extra pulse at the beginning (start) and ending (stop) for each character. When start/stop pulses are used in the coding of signals, it is called an *asynchronous* (nonsynchronous)

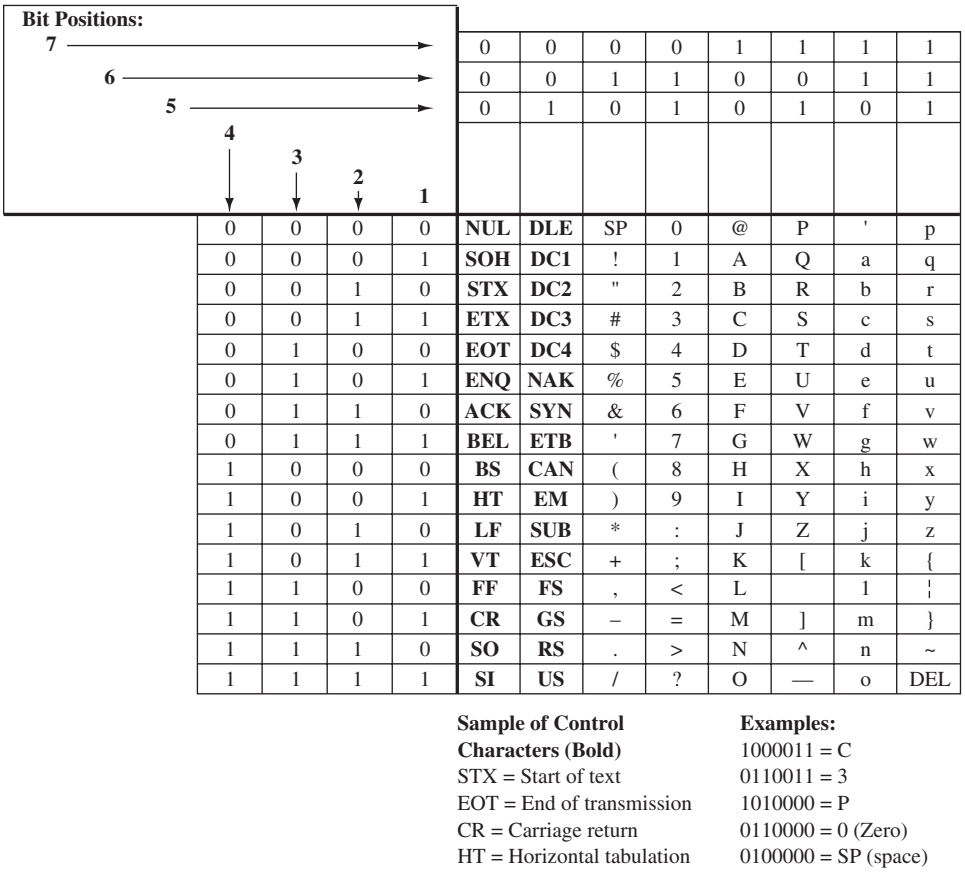

| Bit Positions: 7 | 0 | 0 | 0 | 0 | 1 | 1 | 1 | 1 |
|---|---|---|---|---|---|---|---|---|
| 6 | 0 | 0 | 1 | 1 | 0 | 0 | 1 | 1 |
| 5 | 0 | 1 | 0 | 1 | 0 | 1 | 0 | 1 |
| 4 3 2 1 | | | | | | | | |
| 0 0 0 0 | **NUL** | **DLE** | SP | 0 | @ | P | ' | p |
| 0 0 0 1 | **SOH** | **DC1** | ! | 1 | A | Q | a | q |
| 0 0 1 0 | **STX** | **DC2** | " | 2 | B | R | b | r |
| 0 0 1 1 | **ETX** | **DC3** | # | 3 | C | S | c | s |
| 0 1 0 0 | **EOT** | **DC4** | $ | 4 | D | T | d | t |
| 0 1 0 1 | **ENQ** | **NAK** | % | 5 | E | U | e | u |
| 0 1 1 0 | **ACK** | **SYN** | & | 6 | F | V | f | v |
| 0 1 1 1 | **BEL** | **ETB** | ' | 7 | G | W | g | w |
| 1 0 0 0 | **BS** | **CAN** | ( | 8 | H | X | h | x |
| 1 0 0 1 | **HT** | **EM** | ) | 9 | I | Y | i | y |
| 1 0 1 0 | **LF** | **SUB** | * | : | J | Z | j | z |
| 1 0 1 1 | **VT** | **ESC** | + | ; | K | [ | k | { |
| 1 1 0 0 | **FF** | **FS** | , | < | L | | l | ¦ |
| 1 1 0 1 | **CR** | **GS** | – | = | M | ] | m | } |
| 1 1 1 0 | **SO** | **RS** | . | > | N | ^ | n | ~ |
| 1 1 1 1 | **SI** | **US** | / | ? | O | — | o | DEL |

**Sample of Control Characters (Bold)**
STX = Start of text
EOT = End of transmission
CR = Carriage return
HT = Horizontal tabulation

**Examples:**
1000011 = C
0110011 = 3
1010000 = P
0110000 = 0 (Zero)
0100000 = SP (space)

FIGURE 2 American Standard Code for Information Interchange (ASCII).

transmission. A synchronous transmission (without start/stop pulses) allows more characters to be transmitted within a given sequence of bits. The transmission of information between various computer installations may require the less efficient asynchronous transmitting mode depending on computer characteristics.

## The EBCDIC Code

**EBCDIC**
standardized coding scheme for alphanumeric symbols

The Extended Binary-Coded Decimal Interchange Code **(EBCDIC)** is an 8-bit alphanumeric code. The term *binary-coded decimal* is used in the name because of the structure present in the coding scheme, which uses only the 0–9 positions. A list of the code words for the EBCDIC system is given in Figure 3, and the acronyms for the control characters are listed in Table 1.

## The Baudot Code

**Baudot Code**
fairly obsolete coding scheme for alphanumeric symbols

Another interesting code presented for historical reasons is the **Baudot code.** The Baudot code was developed in the days of teletype machines such as the ASR-33 Teletype terminal. Baudot is an alphanumeric code based on five binary values. The

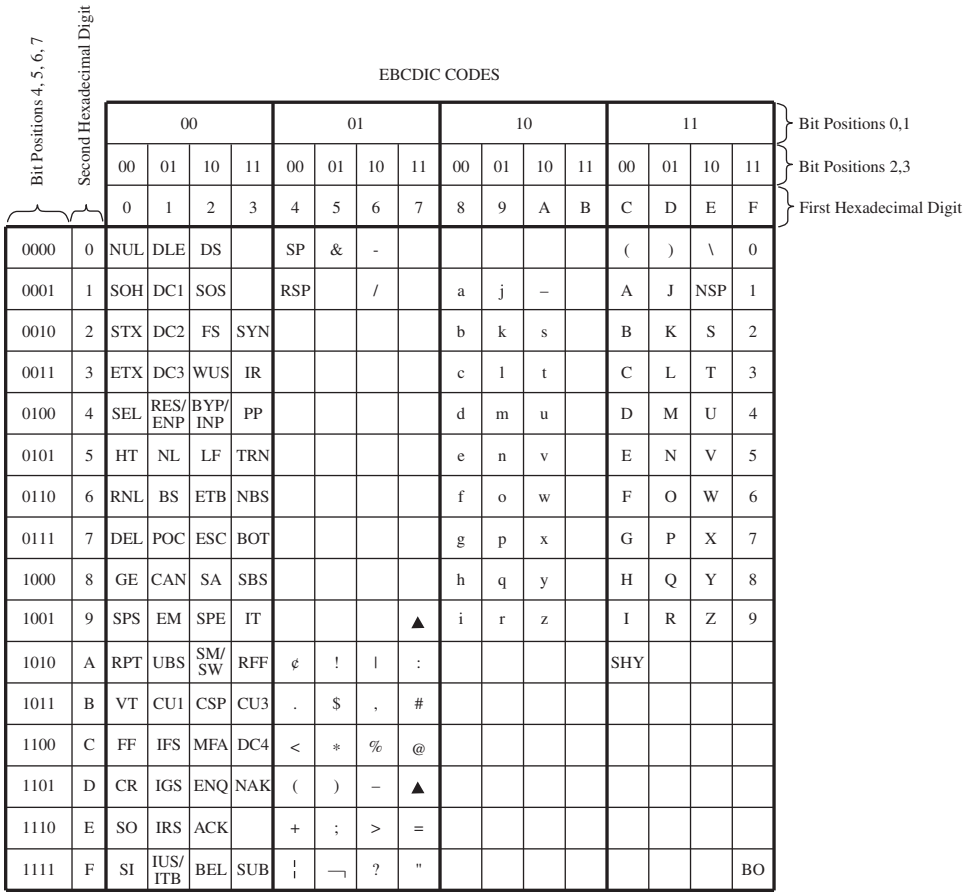


| Bit Positions 4,5,6,7 | Second Hex Digit | 00 | | | | 01 | | | | 10 | | | | 11 | | | |
|---|---|---|---|---|---|---|---|---|---|---|---|---|---|---|---|---|---|
| Bit Positions 0,1 | | 00 | 01 | 10 | 11 | 00 | 01 | 10 | 11 | 00 | 01 | 10 | 11 | 00 | 01 | 10 | 11 |
| Bit Positions 2,3 | | 0 | 1 | 2 | 3 | 4 | 5 | 6 | 7 | 8 | 9 | A | B | C | D | E | F |
| 0000 | 0 | NUL | DLE | DS | | SP | & | - | | | | | | ( | ) | \ | 0 |
| 0001 | 1 | SOH | DC1 | SOS | | RSP | | / | | a | j | – | | A | J | NSP | 1 |
| 0010 | 2 | STX | DC2 | FS | SYN | | | | | b | k | s | | B | K | S | 2 |
| 0011 | 3 | ETX | DC3 | WUS | IR | | | | | c | l | t | | C | L | T | 3 |
| 0100 | 4 | SEL | RES/ ENP | BYP/ INP | PP | | | | | d | m | u | | D | M | U | 4 |
| 0101 | 5 | HT | NL | LF | TRN | | | | | e | n | v | | E | N | V | 5 |
| 0110 | 6 | RNL | BS | ETB | NBS | | | | | f | o | w | | F | O | W | 6 |
| 0111 | 7 | DEL | POC | ESC | BOT | | | | | g | p | x | | G | P | X | 7 |
| 1000 | 8 | GE | CAN | SA | SBS | | | | | h | q | y | | H | Q | Y | 8 |
| 1001 | 9 | SPS | EM | SPE | IT | | | | ▲ | i | r | z | | I | R | Z | 9 |
| 1010 | A | RPT | UBS | SM/ SW | RFF | ¢ | ! | \| | : | | | | | SHY | | | |
| 1011 | B | VT | CU1 | CSP | CU3 | . | $ | , | # | | | | | | | | |
| 1100 | C | FF | IFS | MFA | DC4 | < | * | % | @ | | | | | | | | |
| 1101 | D | CR | IGS | ENQ | NAK | ( | ) | – | ▲ | | | | | | | | |
| 1110 | E | SO | IRS | ACK | | + | ; | > | = | | | | | | | | |
| 1111 | F | SI | IUS/ ITB | BEL | SUB | ¦ | ¬ | ? | " | | | | | | | | BO |

FIGURE 3 The Extended Binary-Coded Decimal Interchange Code.

**Table 1** The EBCDIC Code—List of Abbreviations

| | | | | | |
|---|---|---|---|---|---|
| ACK | Acknowledge | ETB | End of Transmission | RFF | Required Form Feed |
| BEL | Bell | ETX | End of Text | RNL | Required New Line |
| BS | Backspace | FF | Form Feed | RPT | Repeat |
| BYP/ INP | Bypass/Inhibit Presentation | FS | Field Separator | SA | Set Attribute |
| | | GE | Graphic Escape | SBS | Subscript |
| CAN | Cancel | HT | Horizontal Tab | SEL | Select |
| CR | Carriage Return | IFS | Interchange File Sep. | SFE | Start Field Extend |
| CSP | Control Sequence Prefix | IGS | Interchange Group Sep. | SI | Shift In |
| CU1 | Customer Use 1 | IR | Index Return | SM/SW | Set Mode/Switch |
| CU3 | Customer Use 3 | IRS | Interchange Record Sep. | SO | Shift Out |
| DC1 | Device Control 1 | IT | Indent Tab | SOH | Start of Heading |
| DC2 | Device Control 2 | IUS/ ITB | Interchange Unit Sep./ Intermediate Text Block | SOS | Start of Significance |
| DC3 | Device Control 3 | | | SPS | Superscript |
| DC4 | Device Control 4 | LF | Line Feed | STX | Start of Text |
| DEL | Delete | MFA | Modify Field Attribute | SUB | Substitute |
| DLE | Data Link Escape | NAK | Negative Acknowledge | SYN | Synchronous Idle |
| DS | Digit Select | NBS | Numeric Backspace | TRN | Transparent |
| EM | End of Medium | NL | New Line | UBS | Unit Backspace |
| ENQ | Enquiry | NUL | Null | VT | Vertical Tab |
| EO | Eight Ones | POC | Program-Operator Comm. | WUS | Word Underscore |
| EOT | End of Transmission | PP | Presentation Position | | |
| ESC | Escape | RES/NEP | Restore/Enable Presentation | | |

FIGURE 4 The Baudot code.

| Character Shift | | Binary Code | | | | |
|---|---|---|---|---|---|---|
| | | BIT | | | | |
| Letter | Figure | 4 | 3 | 2 | 1 | 0 |
| A | _ | 1 | 1 | 0 | 0 | 0 |
| B | ? | 1 | 0 | 0 | 1 | 1 |
| C | : | 0 | 1 | 1 | 1 | 0 |
| D | $ | 1 | 0 | 0 | 1 | 0 |
| E | 3 | 1 | 0 | 0 | 0 | 0 |
| F | ! | 1 | 0 | 1 | 1 | 0 |
| G | & | 0 | 1 | 0 | 1 | 1 |
| H | # | 0 | 0 | 1 | 0 | 1 |
| I | 8 | 0 | 1 | 1 | 0 | 0 |
| J | ' | 1 | 1 | 0 | 1 | 0 |
| K | ( | 1 | 1 | 1 | 1 | 0 |
| L | ) | 0 | 1 | 0 | 0 | 1 |
| M | . | 0 | 0 | 1 | 1 | 1 |
| N | , | 0 | 0 | 1 | 1 | 0 |
| O | 9 | 0 | 0 | 0 | 1 | 1 |
| P | 0 | 0 | 1 | 1 | 0 | 1 |
| Q | 1 | 1 | 1 | 1 | 0 | 1 |
| R | 4 | 0 | 1 | 0 | 1 | 0 |
| S | BEL | 1 | 0 | 1 | 0 | 0 |
| T | 5 | 0 | 0 | 0 | 0 | 1 |
| U | 7 | 1 | 1 | 1 | 0 | 0 |
| V | ; | 0 | 1 | 1 | 1 | 1 |
| W | 2 | 1 | 1 | 0 | 0 | 1 |
| X | / | 1 | 0 | 1 | 1 | 1 |
| Y | 6 | 1 | 0 | 1 | 0 | 1 |
| Z | " | 1 | 0 | 0 | 0 | 1 |
| Figure Shift | | 1 | 1 | 1 | 1 | 1 |
| Letter Shift | | 1 | 1 | 0 | 1 | 1 |
| Space | | 0 | 0 | 1 | 0 | 0 |
| Line Feed | | 0 | 1 | 0 | 0 | 0 |
| Null | | 0 | 0 | 0 | 0 | 0 |

Baudot code is not very powerful, but it does have its place in communications history. The Baudot code is provided in Figure 4.

The alphabet has 26 letters, and there is an almost equal number of commonly used symbols and numbers. The 5-bit Baudot code is capable of handling these possibilities. A 5-bit code can have only $2^5$ or 32 bits of information but actually provides $26 \times 2$ bits by transmitting a 11111 to indicate all following items are "letters" until a 11011 transmission occurs, indicating "figures." Notice that no provision for lowercase letters is provided.

Figure 5(a) shows an example of the Baudot code to transmit "YANKEES 4 REDSOX 3." Be sure to work out the code in Figure 5(b) on your own; it is the only "X-rated" part of this book that we were allowed to include.

## The Gray Code

**Gray Code**
numeric code for representing decimal values from 0 to 9

The last alphanumeric code we will look at is the **Gray code.** The Gray code is a numeric code for representing the decimal values from 0 to 9. It is based on the relationship that only one bit in a binary word changes for each binary step. For

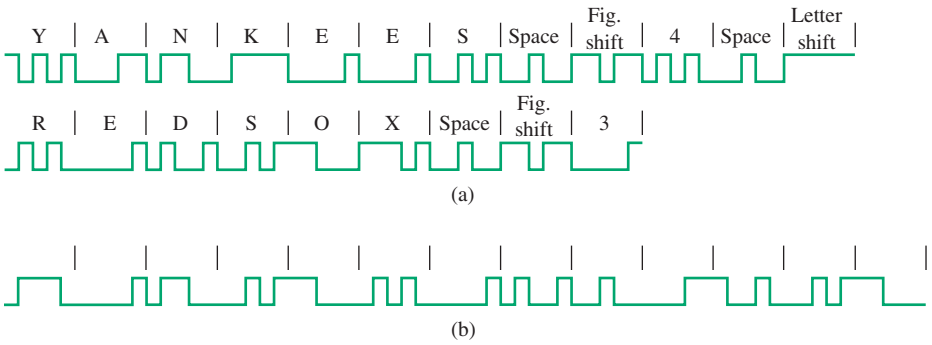


FIGURE 5 Baudot code examples.

example, the code for 7 is 0010 while the code for 8 is 0011. Notice that only one binary bit changes when the decimal value changes from 7 to 8. This is true for all of the numbers (0–9). The Gray code is shown in Figure 6.

The Gray code is used most commonly in telemetry systems that have slowly changing data or in communication links that have a low probability of bit error. This coding scheme works well for detecting errors in slowly changing outputs, such as data from a temperature sensor (thermocouple). If more than one change is detected when words are decoded, then the receiving circuitry assumes that an error is present.

1-bit change for each step value.

| Binary | # |
|---|---|
| 0000 | 0 |
| 1000 | 1 |
| 1100 | 2 |
| 0100 | 3 |
| 0110 | 4 |
| 1110 | 5 |
| 1010 | 6 |
| 0010 | 7 |
| 0011 | 8 |
| 1011 | 9 |

FIGURE 6 The Gray code.



## 3 Pulse-Code Modulation

Pulse-code modulation (PCM) is the most common technique used today in digital communications for representing an analog signal by a digital word. PCM is used in many applications, such as your telephone system, digital audio recording (DAT or digital audio tape), CD laser disks, digitized video special effects, voice mail, digital video, and many other applications. PCM techniques and applications are a primary building block for many of today's advanced communications systems.

Pulse-code modulation is a technique for converting the analog signals into a digital representation. The PCM architecture consists of a sample-and-hold (S/H) circuit and a system for converting the sampled signal into a representative binary format. First, the analog signal is input into a sample-and-hold circuit. At fixed time intervals, the analog signal is sampled and held at a fixed voltage level until the circuitry inside the A/D converter has time to complete the conversion process of generating a binary value. A block diagram of the process is shown in Figure 7.

### The Sample-and-Hold Circuit

Most A/D integrated circuits come with sample-and-hold (S/H) circuits integrated into the system, but it is still important for the user to have a good understanding of

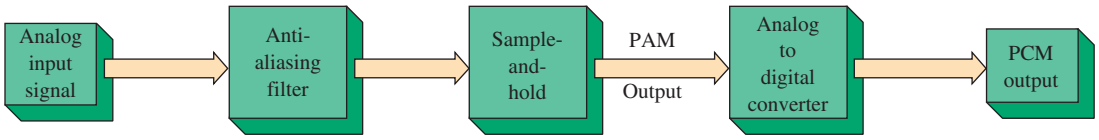


FIGURE 7 Block diagram of the PCM process.

the capabilities and the limitations of the S/H circuit. A typical S/H circuit is shown in Figure 8. The analog signal is typically input into a buffer circuit. The purpose of the buffer circuit is to isolate the input signal from the S/H circuit and to provide proper impedance matching as well as drive capability to the hold circuit. Many times the buffer circuit is also used as a current source to charge the hold capacitor. The output of the buffer is fed to an analog switch, which is typically the drain of a junction field-effect transistor (JFET) or a metal-oxide semiconductor field-effect transistor (MOSFET). The JFET or MOSFET is wired as an analog switch, which is controlled at the gate by a sample pulse generated by the sample clock. When the JFET or MOSFET transistor is turned on, the switch will short the analog signal from drain to source. This connects the buffered input signal to a hold capacitor. The capacitor begins to charge to the input voltage level at a time constant determined by the hold capacitor's capacitance and the analog switch's and buffer circuit's "on" channel resistance.

When the analog switch is turned off, the sampled analog signal voltage level is held by the "hold" capacitor. Figure 9(a) shows a picture of a sinusoid on the input of the S/H circuit. The sample times are indicated by the vertical dotted lines. In Figure 9(b) the sinusoid is redrawn as a sampled signal. Note that the sampled signal maintains a fixed voltage level between samples. The region where the voltage level remains relatively constant is called the *hold time*. The resulting waveform, shown in Figure 9(b), is called a pulse-amplitude-modulated (PAM) signal. The S/H circuit is designed so that the sampled signal is held long enough for the signal to be converted by the A/D circuitry into a binary representation.

**Acquisition Time**
amount of time it takes for the hold capacitor to reach its final value

The time required for an S/H circuit to complete a sample is based partly on the acquisition and aperture time. The **acquisition time** is the amount of time it

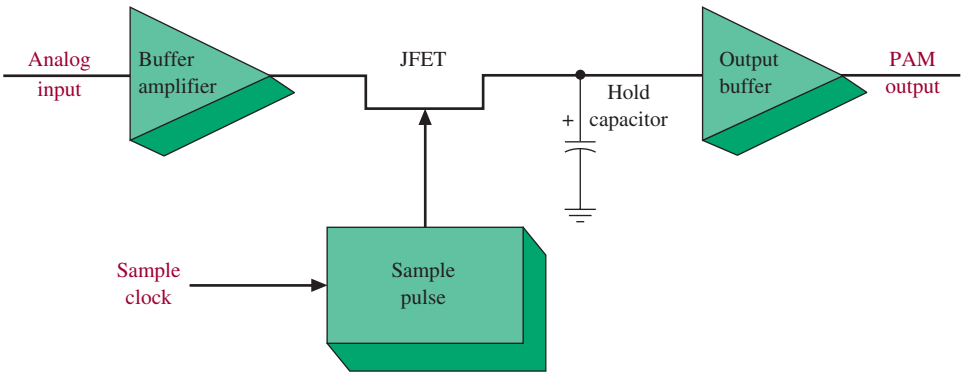


FIGURE 8 A sample-and-hold circuit.

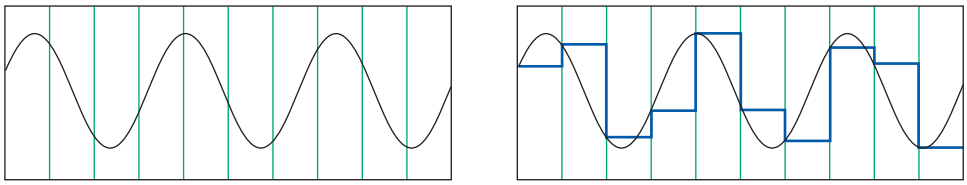

(a) Sample intervals for an input sinusoid. (b) A pulse-amplitude-modulated (PAM) signal.

FIGURE 9 Generation of PAM.

takes for the hold circuit to reach its final value. (During this time the analog switch connects the input signal to the hold capacitor.)

The acquisition time is controlled by the sample pulse. The **aperture time** is the time that the S/H circuit must hold the sampled voltage. The aperture and acquisition times limit the maximum input frequency that the S/H circuit can accurately process.

**Aperture Time**
the time that the S/H circuit must hold the sampled voltage

To provide a good-quality S/H circuit, a couple of design considerations must be met. The analog switch "on" resistance must be small. The output impedance of the input buffer must also be small. By keeping the input resistance minimal, the overall time constant for sampling the analog signal can be controlled by the selection of an appropriate hold capacitor. Ideally a minimal-size hold capacitor should be selected so that a fast charging time is possible, but a small capacitor will have trouble holding a charge for a very long period. A 1-nF hold capacitor is a popular choice for many circuit designers. It is important too that the hold capacitor be of high quality. High-quality capacitors have polyethylene, polycarbonate, or teflon dielectrics. These types of dielectrics minimize voltage variations due to capacitor characteristics.

## Pulse-Amplitude Modulation

The concept of pulse-amplitude modulation (PAM) has already been introduced in this chapter, but there are a few specifics regarding the creation of a pulse-amplitude-modulated signal at the output of a sample-and-hold circuit that necessitate discussion.

Two basic sampling techniques are used to create a PAM signal. The first is called **natural sampling.** Natural sampling occurs when the tops of the sampled waveform (the sampled analog input signal) retain their natural shape. An example of natural sampling is shown in Figure 10(a). Notice that one side of the analog switch is connected to ground. When the transistor is turned on, the JFET will short the signal to ground, but it will pass the unaltered signal to the output when the transistor is off. Note, too, that there is not a hold capacitor present in the circuit.

**Natural Sampling**
sampling in which the tops of the sampled waveforms retain their natural shape

Probably the most popular type of sampling used in PCM systems is called **flat-top sampling.** In flat-top sampling, the sample signal voltage is held constant between samples. The method of sampling creates a staircase that tracks the changing input signal. This method is popular because it provides a constant voltage during a window of time for the binary conversion of the input signal to be completed. An example of flat-top sampling is shown in Figure 10(b). Note that this is the same type of waveform as shown in Figure 9(b). With flat-top sampling, the analog switch connects the input signal to the hold capacitor.

**Flat-Top Sampling**
sampling in which the signal voltage is held constant during samples, creating a staircase that tracks the changing input waveform

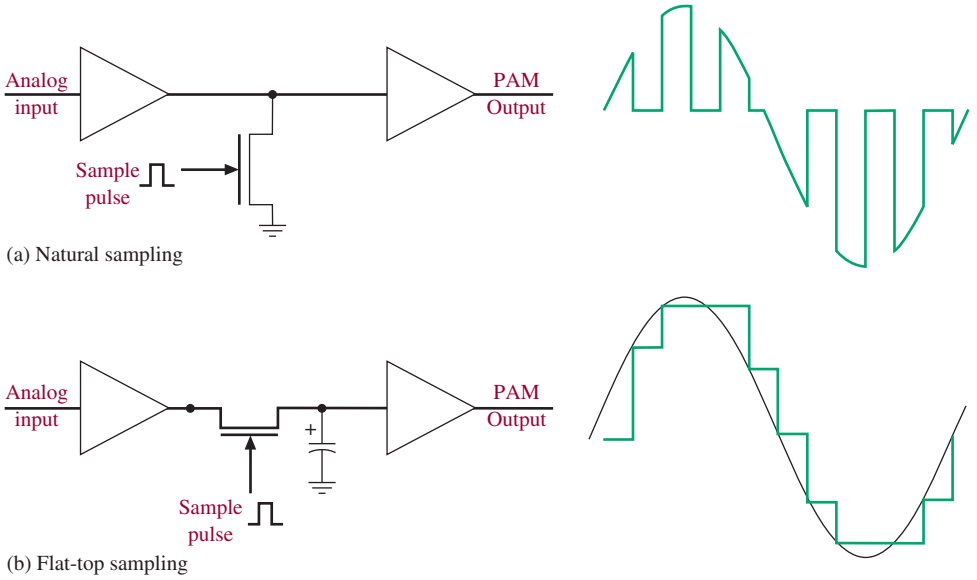


FIGURE 10 (a) Natural sampling; (b) flat-top sampling.

## The Sample Frequency

**Nyquist Rate**
states that the sample frequency must be at least twice the highest input frequency

One of the most critical specifications in a PCM system is the selection of the sample frequency. The sample frequency is governed by the **Nyquist rate.** The Nyquist rate states that the sample frequency ($f_s$) must be at least twice the highest input frequency ($f_a$).

$$f_s \geq 2f_a \tag{1}$$

Sampling a signal gives many of the same properties that a "mixer" circuit in RF communications possesses. The mathematical relationship for a mixer circuit and a sampling circuit is expressed by the trigonometric identity

$$\sin A \times \sin B = 0.5 \cos (A - B) - 0.5 \cos (A + B) \tag{2}$$

From Equation (2), it is evident that if the $A$ frequency ($f_s$) is not twice the $B$ frequency ($f_b$), then the $A - B$ ($f_s - f_a$) term will produce a signal whose frequency is less than $B$'s ($f_a$). This created signal will appear within the original frequency bandwidth. Figure 11 graphically depicts the relationship of the sample frequency to the input frequency.

**Aliasing or Foldover Distortion**
the phenomenon associated with the generation of error signals in the sampling process

**Antialiasing Filter**
a filter that bandlimits the input frequencies to $\frac{1}{2}$ the sampling frequency so that foldover distortion, or aliasing, is prevented

The phenomenon associated with the generation of an erroneously created signal in the sampling process is called **aliasing** or **foldover distortion.** These error signals can be minimized by incorporating an **antialiasing filter** (i.e., a low-pass filter) on the input to the S/H circuit. The antialiasing filter bandlimits the input frequencies so that foldover distortion, or aliasing, is eliminated or minimized.

For example, a voice channel on a telephone system is band-limited to a maximum of 4 kHz. The sample rate for the telephone system is 8 kHz, twice the highest input frequency. The input frequency is band-limited by either an active or a passive low-pass filter circuit. Therefore, the difference component ($A - B$) term will create a signal above the band-limited range of 4 kHz. Keep in mind that the input

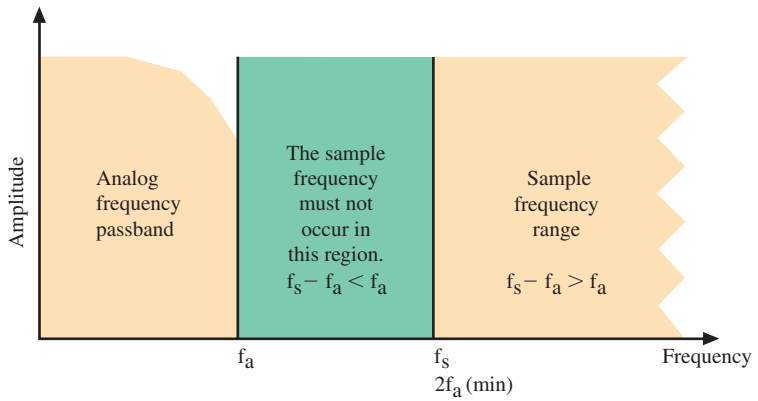


FIGURE 11 The sample frequency and input frequency relationship.

signal will seldom be a pure sinusoid so there will be some harmonic content to the signal. The harmonics, if not filtered, can lead to aliasing, or foldover distortion, problems.

**Example 1**

*A CD audio laser-disk system has a frequency bandwidth of 20 Hz to 20 kHz. What is the minimum sample rate required to satisfy the Nyquist sampling rate?*

Solution

$$f_s \geq 2f_a \quad (1)$$
$$f_s \geq 2 \times 20 \text{ kHz}$$
$$f_s \geq 40 \text{ kHz}$$

*Note:* The sample rate for CD audio players is 44.1 kHz.

## Quantization

Once an analog signal has been properly sampled, the process of converting the sampled signal to a binary value can begin. In PCM systems the sampled signal is segmented into different voltage levels, with each level corresponding to a different binary number. This process is called **quantization.** The quantization levels also determine the resolution of the digitizing system. Each quantization level step-size is called a **quantile,** or **quantile interval.**

Analog signals are quantized to the closest binary value provided in the digitizing system. This is an approximation process. For example, if our numbering system is the set of whole numbers 1, 2, 3, . . . , and the number 1.4 must be converted (rounded off) to the closest whole number, then 1.4 is translated to 1. If the input number is 1.6, then the number is translated to a 2. If the number is 1.5, then we have the same error if the number is rounded off to a 1 or a 2.

In PCM, the electrical representation of voice is converted from analog form to digital form. This process of encoding is shown in Figure 12. There are a set of

**Quantization**
process of segmenting a sampled signal in a PCM system into different voltage levels, each level corresponding to a different binary number

**Quantile**
a quantization level step-size

**Quantile Interval**
another name for quantile

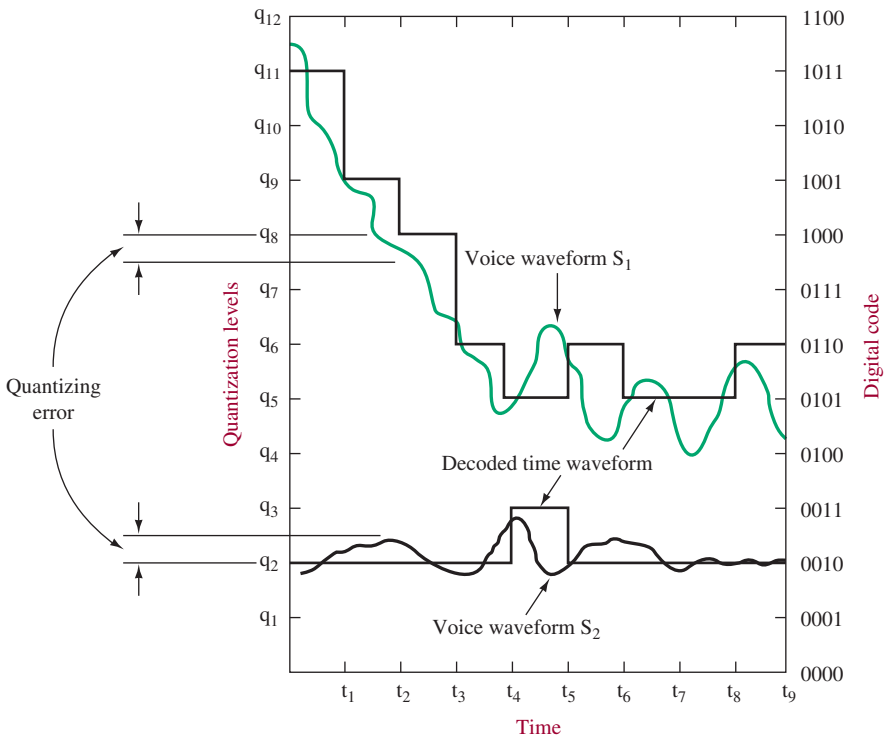


FIGURE 12 PCM encoding. (From the November 1972 issue of the *Electronic Engineer,* with the permission of the publisher.)

**Quantization Levels**
another name for quantile

amplitude levels and sampling times. The amplitude levels are termed **quantization levels,** and 12 such levels are shown. At each sampling interval, the analog amplitude is quantized into the closest available quantization level, and the analog-to-digital converter (ADC) puts out a series of pulses representing that level in the binary code.

For example, at time $t_2$ in Figure 12, voice waveform $S_1$ is closest to level $q_8$, and thus the coded output at that time is the binary code 1000, which represents 8 in binary code. Note that the quantizing process resulted in an error, which is termed the **quantizing error,** or **quantizing noise.** The maximum voltage of the quantization error is one-half the voltage of the minimum step-size $V_{LSB/2}$. Voice waveform $S_2$ provides a 0010 code at time $t_2$, and its quantizing error is also shown in Figure 12. The amount of this error can be minimized by increasing the number of quantizing levels, which of course lessens the space between each one. The 4-bit code shown in Figure 12 allows for a maximum of 16 levels because $2^4 = 16$. The use of a higher-bit code decreases the error at the expense of transmission time and/or bandwidth because, for example, a 5-bit code (32 levels) means transmitting 5 high or low pulses instead of 4 for each sampled point. The sampling rate is also critical and must be greater than twice the highest significant frequency, as previously described. It should be noted that the sampling rate in Figure 12 is lower than the highest-frequency component of the information. This is not a practical situation but was done for illustrative purposes.

**Quantizing Error**
an error resulting from the quantization process

**Quantizing Noise**
another name for quantizing error

While a 4- or 5-bit code may be adequate for voice transmission, it is not adequate for transmission of television signals. Figure 13 provides an example of




FIGURE 13 PCM TV transmission: (a) 5-bit resolution; (b) 8-bit resolution.

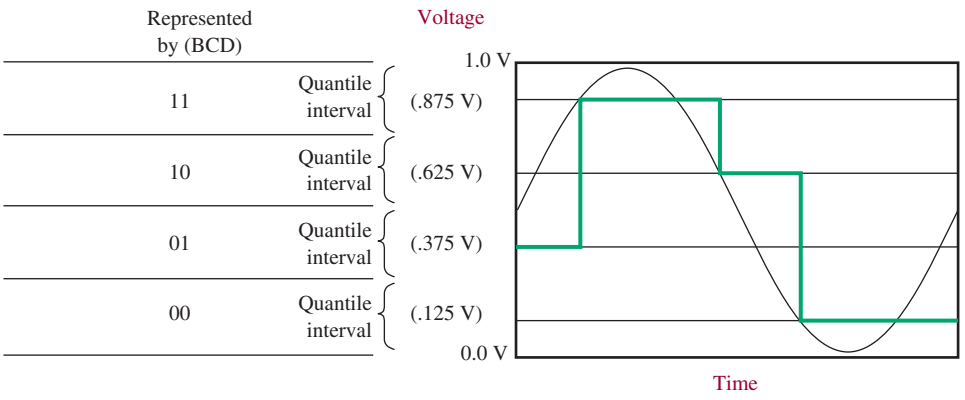


FIGURE 14 Voltage levels for a quantized signal.

TV pictures for 5-bit and 8-bit (256 levels) PCM transmissions, each with 10-MHz sampling rates. In the first (5-bit) picture, contouring in the forehead and cheek areas is very pronounced. The 8-bit resolution results in an excellent-fidelity TV signal that is not discernibly different from a standard continuous modulation transmission.

Notice in Figure 14 that at the sample intervals, the closest quantization level is selected for representing the sine-wave signal. The resulting waveform has poor resolution with respect to the sine-wave input. *Resolution* with respect to a digitizing system refers to the accuracy of the digitizing system in representing a sampled signal. It is the smallest analog voltage change that can be distinguished by the converter. For example, the analog input to our PCM system has a minimum voltage of 0.0 V and a maximum of 1.0 V. Then

$$q = \frac{V_{\max}}{2^n} = \frac{V_{FS}}{2^n}$$

where $q$ = the resolution
$n$ = number of bits
$V_{FS}$ = full-scale voltage

If a 2-bit system is used for quantizing a signal, then $2^2$, or 4, quantized levels are used. Referring to Figure 14 we see that the quantized levels (quantile intervals) are each 0.25 V in magnitude. Typically it is stated that this system has 2-bit resolution. This follows from the equation just presented.

To increase the resolution of a digitizing system requires that the number of quantization levels be increased. To increase the number of quantization levels requires that the number of binary bits representing each voltage level be increased. If the resolution of the example in Figure 14 is increased to 3 bits, then the input signal will be converted to 1 of 8 possible values. The 3-bit example with improved resolution is shown in Figure 15.

Another way of improving the accuracy of the quantized signal is to increase the sample rate. Figure 16 shows the sample rate doubled but still using a 3-bit system. The resultant signal shown in Figure 16 is dramatically improved compared to the quantized waveform shown in Figure 15 by this change in sampling rate.

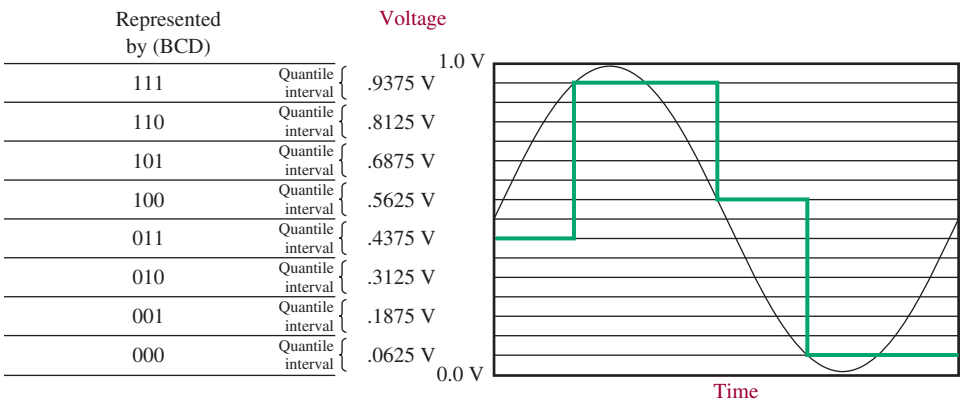


FIGURE 15 An example of 3-bit quantization.

## Dynamic Range and Signal-to-Noise Calculations

**Dynamic range** (DR) for a PCM system is defined as the ratio of the maximum input or output voltage level to the smallest voltage level that can be quantized and/or reproduced by the converters. It is the same as the converter's parameters:

**Dynamic Range**
in a PCM system, the ratio of the maximum input or output voltage level to the smallest voltage level that can be quantized and/or reproduced by the converters

$$\frac{V_{FS}}{q}, \frac{\text{full-scale voltage}}{\text{resolution}}$$

This value is expressed as follows:

$$DR = \frac{V_{max}}{V_{min}} = 2^n \tag{3}$$

Dynamic range is typically expressed in terms of decibels. For a binary system, each bit can have two logic levels, either a logical low or logical high. Therefore

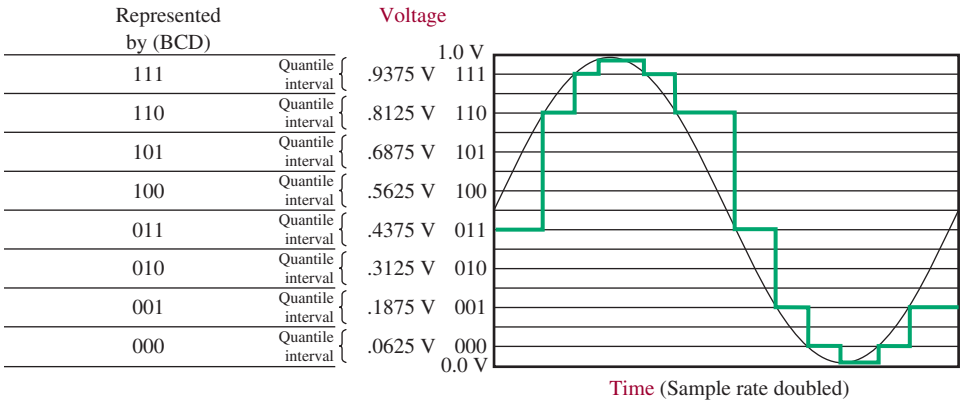


FIGURE 16 An example of 3-bit quantization with increased sample rate.

the dynamic range for a single-bit binary system can be expressed logarithmically, in terms of dB, by the expression

$$\mathrm{DR_{dB}} = 20 \log \frac{V_{\max}}{V_{\min}}$$

$$\mathrm{DR_{dB}} = 20 \log 2^n \tag{4}$$

where $n$ = number of bits in the digital word.

The dynamic range (DR) for a binary system is expressed as 6.02 dB/bit or $6.02 \times n$, where $n$ represents the number of quantizing bits. This value comes from $20 \log 2 = 6.02$ dB, where the 2 represents the two possible states of one binary bit. To calculate the dynamic range for a multiple-bit system, simply multiply the number of quantizing bits ($n$) times 6.02 dB per bit. For example, an 8-bit system will have a dynamic range (expressed in dB) of

$$(8 \text{ bits})(6.02 \text{ dB/bit}) = 48.16 \text{ dB}$$

The *signal-to-noise ratio (S/N)* for a digitizing system is written as

$$S/N = [1.76 + 6.02n] \tag{5}$$

where $n$ = the number of bits used for quantizing the signal
$S/N$ = the signal-to-noise ratio in dB

This relationship is based on the ratio of the rms quantity of the maximum input signal to the rms quantization noise.

Another way of measuring digitized or quantized signals is the *signal-to-quantization-noise level* $(S/N)_q$. This relationship is expressed mathematically, in dB, as

$$(S/N)_{q(\mathrm{dB})} = 10 \log 3L^2 \tag{6}$$

where $L$ = number of quantization levels
$L = 2^n$, where $n$ = the number of bits used for sampling

Example 2 shows how Equations (4), (5), and (6) can be used to obtain the number of quantizing bits required to satisfy a specified dynamic range and determine the signal-to-noise ratio for a digitizing system.

## Example 2

*A digitizing system specifies 55 dB of dynamic range. How many bits are required to satisfy the dynamic range specification? What is the signal-to-noise ratio for the system? What is $(S/N)_q$ for the system?*

### Solution

First solve for the number of bits required to satisfy a dynamic range (DR) of 55 dB.

$$\text{DR} = 6.02 \text{ dB/bit } (n) \quad (4)$$
$$55 \text{ dB} = 6.02 \text{ dB/bit } (n)$$
$$n = \frac{55}{6.02} = 9.136$$

Therefore, 10 bits are required to achieve 55 dB of dynamic range. Nine bits will provide a dynamic range of only 54.18 dB. The tenth bit is required to meet the 55 dB of required dynamic range. Ten bits provides a dynamic range of 60.2 dB. To determine the signal-to-noise (*S/N*) ratio for the digitizing system:

$$S/N = [1.76 + 6.02n] \text{ dB} \quad (5)$$
$$S/N = [1.76 + (6.02)10] \text{ dB}$$
$$S/N = 61.96 \text{ dB}$$

Therefore, the system will have a signal-to-noise ratio of 61.96 dB. For this example, 10 sample bits are required; therefore, $L = 2^{10} = 1024$ and

$$(S/N)_{q(\text{dB})} = 10 \log 3L^2 = 10 \log 3(1024)^2 = 64.97 \text{ dB} \quad (6)$$

For Example 2, the dynamic range is 60.2 dB, $S/N = 61.96$ dB, and $(S/N)_q = 64.97$ dB. The differences result from the assumptions made about the sampled signal and the quantization process. For practical purposes, the 60.2-dB value is a good estimate, and it is easy to remember that each quantizing bit provides about 6 dB of dynamic range.

## Companding

Up to this point our discussion and analysis of PCM systems have been developed around **uniform** or **linear quantization levels.** In linear (uniform) quantization systems each quantile interval is the same step-size. An alternative to linear PCM systems is **nonlinear** or **nonuniform coding** in which each quantile interval step-size may vary in magnitude.

**Uniform Quantization Level**
each quantile interval is the same step-size

**Linear Quantization Level**
another name for uniform quantization level

**Nonlinear Coding**
each quantile interval step-size may vary in magnitude

**Nonuniform Coding**
another name for nonlinear coding

It is quite possible for the amplitude of an analog signal to vary throughout its full range. In fact, this is expected for systems exhibiting a wide dynamic range. The signal will change from a very strong signal (maximum amplitude) to a weak signal (minimum amplitude—$V_{1\text{sb}}$ for quantized systems). For the system to exhibit good signal-to-noise characteristics, either the input amplitude must be increased with reference to the quantizing error or the quantizing error must be reduced.

The justification for the use of a nonuniform quantization system will be presented, but let's discuss some general considerations before proceeding. How can the quantization error be modified in a nonuniform PCM system so that an improved *S/N* results? The answer can be obtained by first examining a waveform that has uniform quantile intervals as shown in Figure 17. Notice that poor resolution is present in the weak signal regions, yet the strong signal regions exhibit a reasonable facsimile of the original signal. Figure 17 also shows how the quantile intervals can be changed to provide smaller step-sizes within the area of the weak signal. This will result in an improved *S/N* ratio for the weak signal.

What is the price paid for incorporating a change such as this in a PCM system? The answer is that the large amplitude signals will have a slightly degraded *S/N,* but this is an acceptable situation if the goal is improving the weak signal's *S/N*.

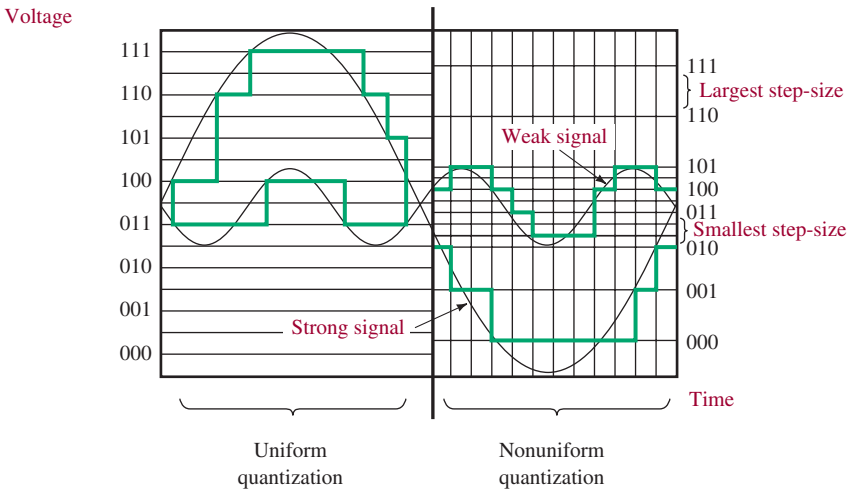


FIGURE 17 Uniform (left) and nonuniform (right) quantization.

## Idle Channel Noise

**Idle Channel Noise**
small-amplitude signal that exists due to the noise in the system

Digital communications systems will typically have some noise in the electronics and the transmission systems. This is true of even the most sophisticated technologies currently available. One of the noise signals present is called **idle channel noise.** Simply put, this is a noise source of small amplitude that exists in the channel independent of the analog input signal and that can be quantized by the A/D converter. One method of eliminating the noise source in the quantization process is to incorporate a quantization procedure that does not recognize the idle channel noise as large enough to be quantized. This usually involves increasing the quantile interval step-size in the noise region to a large-enough value so that the noise signal can no longer be quantized.

## Amplitude Companding

**Amplitude Companding**
process of volume compression before transmission and volume expansion after detection

The other form of companding is called **amplitude companding.** Amplitude companding involves the process of volume compression before transmission and expansion after detection. This is illustrated in Figure 18. Notice how the weak portion of the input is made nearly equal to the strong portion by the compressor but restored

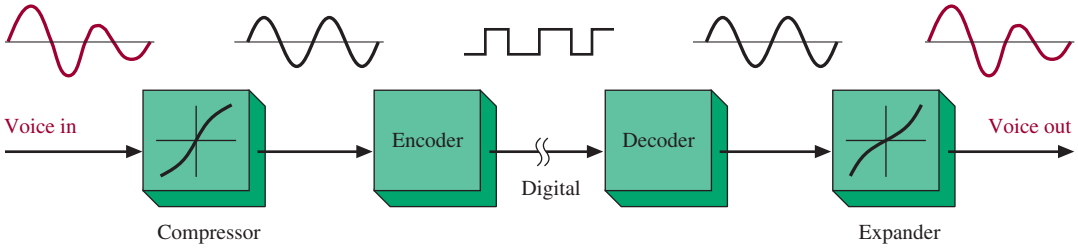


FIGURE 18 Companding process.

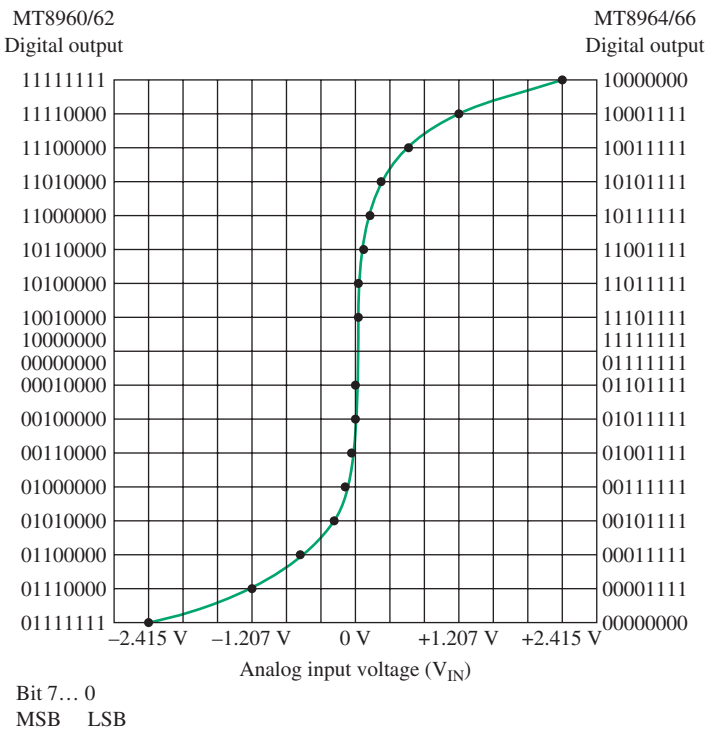


FIGURE 19 $\mu$-law encoder transfer characteristic.

to the proper level by the expander. Companding is essential to quality transmission using PCM and the delta modulation technique.

The use of time-division-multiplexed (TDM) PCM transmission for telephone transmissions has proven its ability to cram more messages into short-haul cables than frequency-division-multiplexed (FDM) analog transmission. The TDM PCM methods were started by Bell Telephone in 1962 and are now the only methods used in new designs except for delta modulation schemes. Once digitized, these voice signals can be electronically switched and restored without degradation. The standard PCM system in U.S. and Japanese telephony uses $\mu$-*law* companding. In Europe, the CCITT* specifies A-law companding. The $\mu$-*law* companded signal is predicted by

$$V_{out} = \frac{V_{max} \times \ln(1 + \mu\, V_{in}/V_{max})}{\ln(1 + \mu)} \tag{7}$$

The $\mu$ parameter defines the amount of compression. For example, $\mu = 0$ indicates no compression and the voltage gain curve is linear. Higher values of $\mu$ yield nonlinear curves. The early Bell systems have $\mu = 100$ and a 7-bit PCM code. An example of $\mu$-law companding is provided in Figure 19. This figure shows the encoder transfer characteristic.

* Consultative Committee on International Telephone & Telegraph.

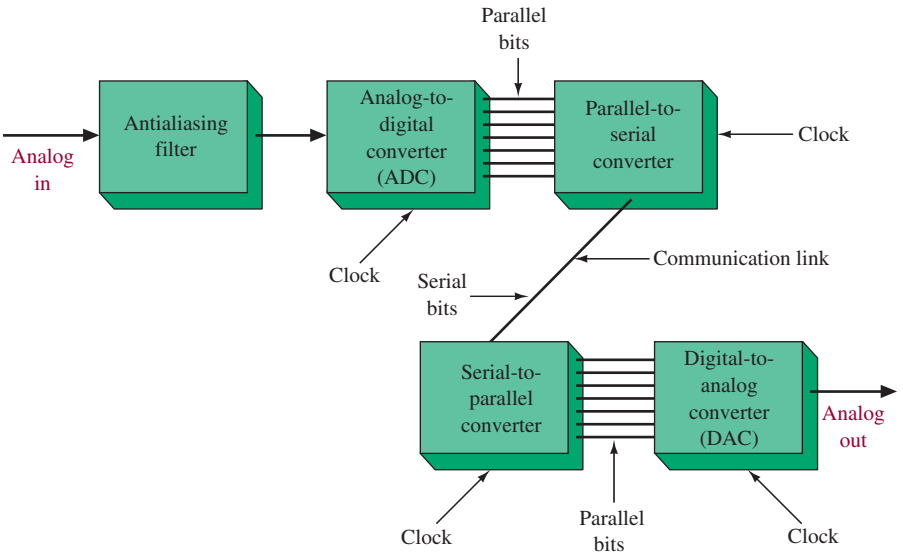


FIGURE 20 PCM communication system.

## Digital-to-Analog Converters

As we saw in Figure 7, the analog-to-digital converter (ADC) is used to convert the information signal to a digital format. This process is known as *digitizing*. A block diagram of a PCM system (transmitter and receiver) is shown in Figure 20. The ADC is shown in the transmitting section and the DAC in the receiver section.

The function of the DAC is to convert a digital (binary) bit stream to an analog signal. The DAC accepts a parallel bit stream and converts it to its analog equivalent. Figure 21 illustrates this point.

The least significant bit (lsb) is called $b_0$ and the most significant bit (msb) is called $b_{n-1}$. The resolution of a DAC is the smallest change in the output that can be caused by a change of the input. This is the step-size of the converter. It is determined by the least significant bit (lsb). The full-scale voltage ($V_{FS}$) is the largest voltage the converter can produce. In a digital-to-analog converter, the step-size or resolution $q$ is given as

$$q = \frac{V_{FS}}{2^n} \tag{8}$$

where $n$ is the number of binary digits.

A binary-weighted resistor DAC is shown in Figure 22. It is one of the more simple DACs to analyze. For simplicity we have used four bits of data. Note that

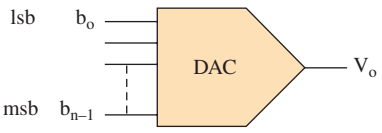


FIGURE 21 DAC input/output.

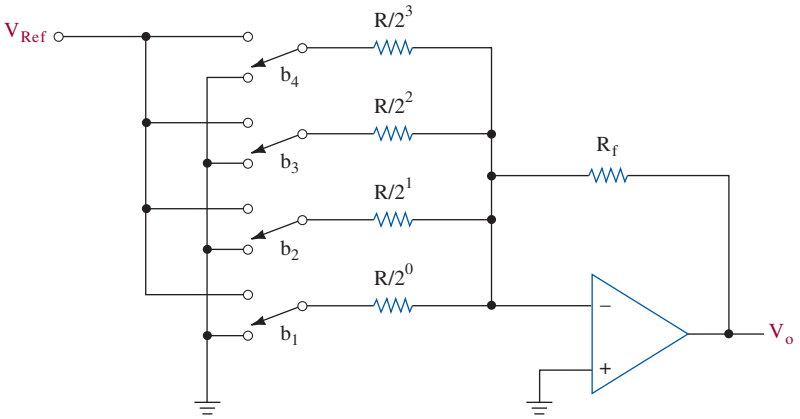


FIGURE 22 Binary-weighted resistor DAC.

the value of the resistor is divided by the binary weight for that bit position. For example, in bit position $2^0$, which has a value of 1, the entire value of $R$ is used. This is also the lsb. Because this is a summing amp, the voltages are added to give the output voltage.

The output voltage is given as

$$V_o = -V_{Ref}\left(\frac{b_1 R_f}{R/2^0} + \frac{b_2 R_f}{R/2^1} + \cdots + \frac{b_{n-1} R_f}{R/2^{n-1}}\right) \tag{9}$$

An *R-2R* ladder-type DAC is shown in Figure 23. This is one of the more popular DACs and is widely used. Note that each switch is activated by a parallel data stream and is summed by the amp. We show a 4-bit *R-2R* circuit for simplicity.

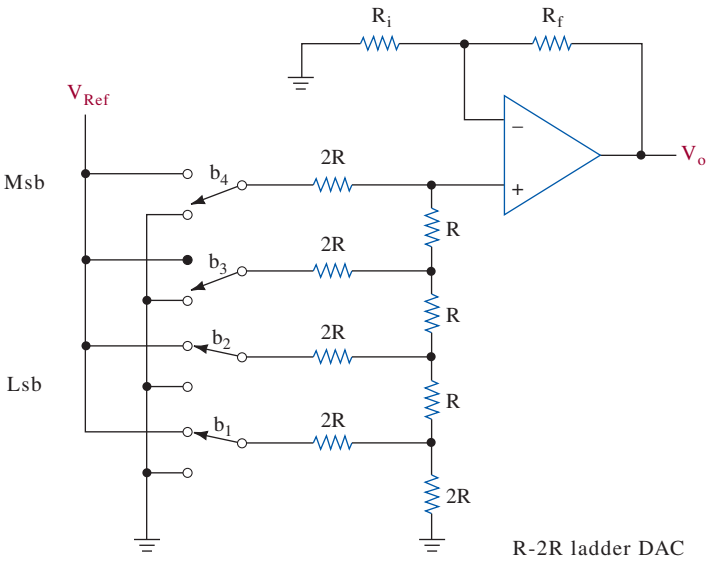


FIGURE 23 R-2R ladder DAC.

The output voltage is given as

$$V_o = V_{Ref}\left(1 + \frac{R_f}{R}\right)\left(\frac{b_n}{2^1} + \frac{b_{n-1}}{2^2} + \cdots + \frac{b_1}{2^n}\right) \tag{10}$$

where $b$ is either 0 or 1, depending on the digital word being decoded.

**Example 3**

*Assume the circuit in Figure 22 has the following values: $R = 100\ k\Omega$ and $R_f = 10\ k\Omega$. Assume $V_{Ref} = -10$ V. Determine the step-size, or resolution, and the output voltage if all switches are closed.*

**Solution**

The step-size is determined by leaving all switches open and closing the lsb. Thus,

$$V_o = -(-10\text{ V})\,(R_f/R) = 10\text{ V}\left(\frac{10\text{ k}\Omega}{100\text{ k}\Omega}\right) = 1.0$$

The resolution is 1.0. If all switches are closed, a logic 1 is input. So, using Equation (9), we have

$$\begin{aligned} V_o &= -(-10\text{ V})\left(\frac{10\text{ k}\Omega}{100\text{ k}\Omega} + \frac{10\text{ k}\Omega}{50\text{ k}\Omega} + \frac{10\text{ k}\Omega}{25\text{ k}\Omega} + \frac{10\text{ k}\Omega}{12.5\text{ k}\Omega}\right) \\ &= (10\text{ V})(0.1 + 0.2 + 0.4 + 0.8) \\ &= (10\text{ V})(1.5) = 15\text{ V} \end{aligned}$$

## Analog-to-Digital Converters

Figure 24 shows a simple 4-bit ramp ADC. The analog information goes into the comparator. The output is ANDed with the clock to cause the counter to begin counting. When the counter's digital output reaches the analog equivalent, the AND gate is low and the counter stops counting. The end of conversion (EOC) signal is used to latch data into the registers and reset the counter. Some delay must be used before resetting the counter, otherwise the data would not be latched into the register. This time is longer than the time it takes the register to latch the data.

Other types of analog-to-digital converters are the successive-approximation ADC and the dual-slope ADC. The successive approximation ADC is more widely used. This is illustrated by its use in the coder-decoder circuits for telephone operations.

## Codec

The A/D circuitry in PCM systems is often referred to as the encoder. The D/A circuitry at the receiver is correspondingly termed the decoder. These functions

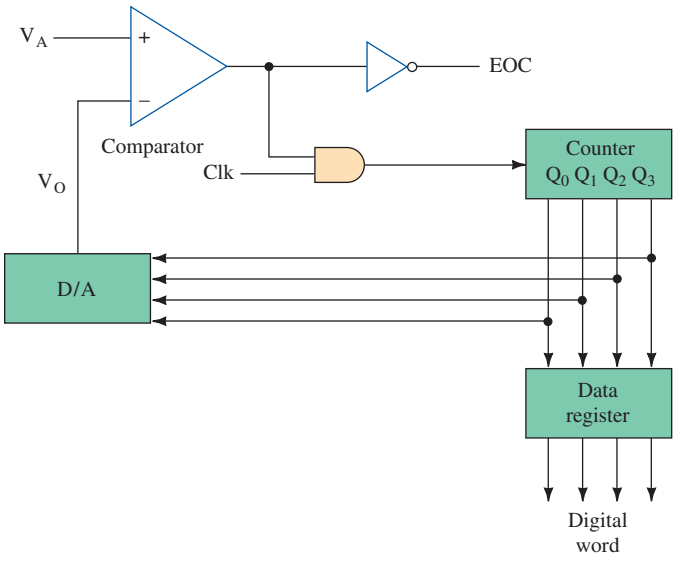


FIGURE 24 4-bit ramp analog-to-digital converter.

**Codec**
a single LSI chip containing both the ADC and DAC circuitry

are often combined in a single LSI chip termed a **codec** (coder-decoder). The block diagram for a typical codec is provided in Figure 25. These devices are widely used in the telephone industry to allow voice transmission to be accomplished in digital form.

Figure 25 shows the functional block diagram of the MT8960–67. These devices provide the conversion interface between the voiceband analog signals of a

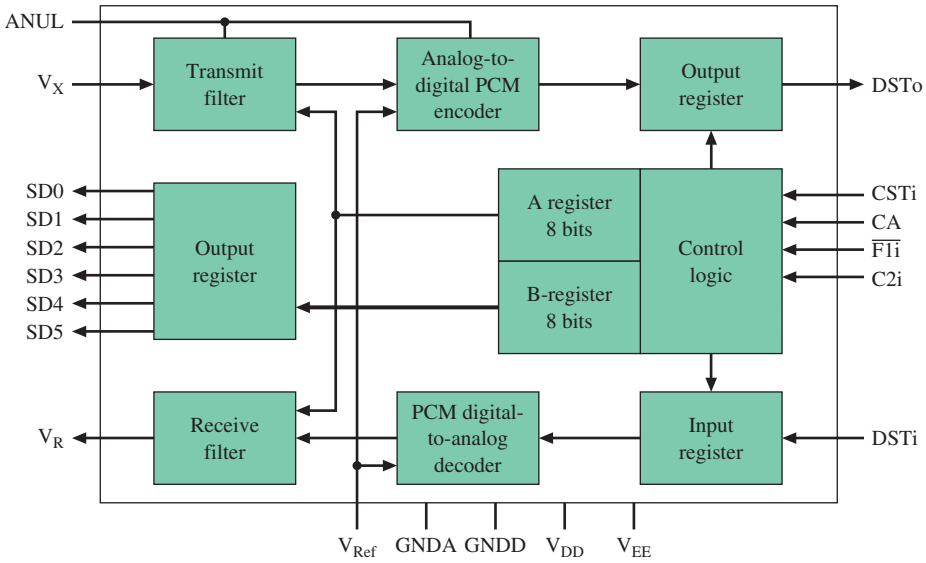


FIGURE 25 Codec block diagram.

telephone subscriber loop and the digital signals required in a digital pulse code modulation (PCM) switching system. Analog (voiceband) signals in the transmit path enter the chip at $V_X$ and are sampled at 8 kHz. The samples are quantized and assigned 8-bit digital values defined by logarithmic PCM encoding laws. Analog signals in the receive path leave the chip at $V_R$ after reconstruction from digital 8-bit words.

Separate switched capacitor filter sections are used for bandlimiting prior to digital encoding in the transmit path and after digital decoding in the receive path. Eight-bit PCM encoded digital data enter and leave the chip serially on DSTi and DSTo pins, respectively.



## 4 Digital Signal Encoding Formats

Transmission of digital data using a binary format (+5 V—hi, 0.0 V—low) is usually limited to short distances such as a computer to a printer interface. Typically the binary data are transmitted serially over a single wire, fiber, or RF link. This requires that the binary data be encoded so that the highs and lows can be detected easily. The transmission systems are typically serial, either asynchronous or synchronous. This requires the addition of clocking information in the data for synchronous systems.

The digital signal encoding formats presented in this section are the most commonly used PCM waveforms. (Note that we are identifying the encoding format as a pulse-code-modulated waveform.) The waveforms are classified as one of four encoding groups:

1. NRZ—nonreturn-to-zero
2. RZ—return-to-zero
3. Phase-encoded and delay modulation
4. Multilevel binary

The encoding formats described are of the *baseband* type. A baseband signal is one that is not modulated. These waveforms are still in a binary or pseudo-binary format, so therefore they are classified as baseband.

### The NRZ Group

The NRZ group is a popular method for encoding binary data. NRZ codes are also one of the easiest to implement. NRZ codes get their name from the fact that the data signal does not return to zero during an interval. In other words, NRZ codes remain constant during an interval. Because of this feature, the code has a dc component in the waveform. For example, a data stream containing a chain of 1s or 0s will appear as a dc signal at the receive side. Look at the waveform for the NRZ-L code that is shown in Figure 26. Notice that the code remains constant for several clock cycles for a series of zeros or ones.

Another important factor to consider is that the NRZ codes do not contain any self-synchronizing capability. NRZ codes will require the use of start bits or some kind of synchronizing data pattern to keep the transmitted binary data synchronized. There are three coding schemes in the NRZ group: NRZ-L (level), NRZ-M (mark), and NRZ-S (space). The waveforms for these formats are provided in Figure 26. The NRZ code descriptions are provided in Table 2.

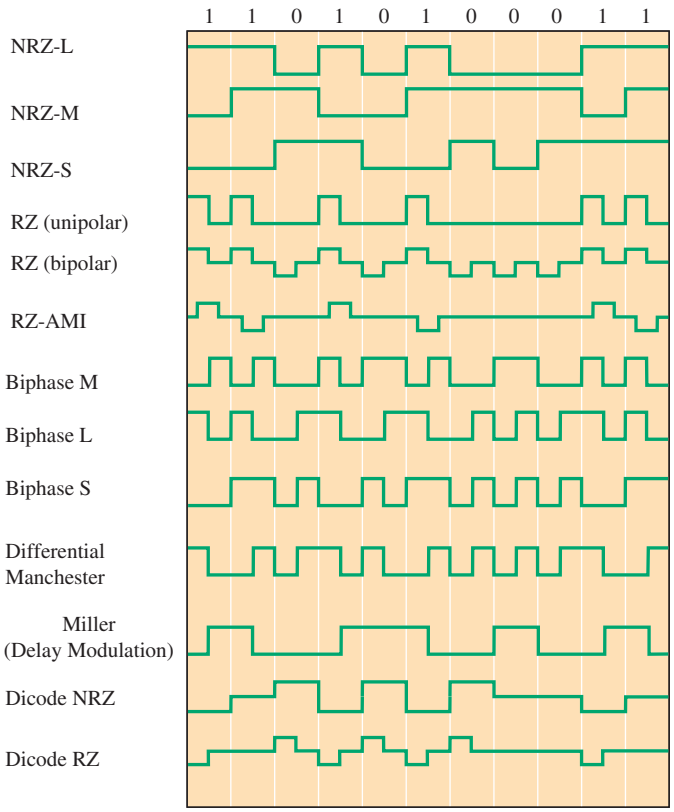


FIGURE 26 Digital signal encoding formats.

**Table 2** NRZ Codes

| | |
|---|---|
| NRZ-L | (nonreturn-to-zero—level)<br>1 (hi)—high level<br>0 (low)—low level |
| NRZ-M | (nonreturn-to-zero—mark)<br>1 (hi)—transition at the beginning of the interval<br>0 (low)—no transition |
| NRZ-S | (nonreturn-to-zero—space)<br>1 (hi)—no transition<br>0 (low)—transition at the beginning of the interval |

## The RZ Codes

The *RZ-unipolar* code shown in Figure 26 has the same limitations and disadvantages as the NRZ group. A dc level appears on the data stream for a series of 1s or 0s. Synchronizing capabilities are also limited. These deficiencies are overcome by modifications in the coding scheme, which include using bipolar signals and alternating pulses. The *RZ-bipolar* code provides a transition at each clock cycle, and a bipolar pulse technique is used to minimize the dc component. Another RZ code is *RZ-AMI*. The alternate-mark-inversion code provides alternating pulses for the 1s. This technique almost completely removes the dc component from the data stream, but since a data value of 0

is 0 V, the system can have poor synchronizing capabilities if a series of 0s is transmitted. This deficiency can also be overcome by transmission of the appropriate start, synchronizing, and stop bits. Table 3 provides descriptions of the RZ codes.

**Table 3** RZ Codes

RZ (unipolar) (return-to-zero)
1 (hi)—transition at the beginning of the interval
0 (low)—no transition
RZ (bipolar) (return-to-zero)
1 (hi)—positive transition in the first half of the clock interval
0 (low)—negative transition in the first half of the clock interval
RZ-AMI (return-to-zero—alternate-mark inversion)
1 (hi)—transition within the clock interval alternating in direction
0 (low)—no transition

## Biphase and Miller Codes

The popular names for phase-encoded and delay-modulated codes are *biphase* and *Miller* codes. Biphase codes are popular for use in optical systems, satellite telemetry links, and magnetic recording systems. *Biphase M* is used for encoding Society of Motion Picture and Television Engineers (SMPTE) time-code data for recording on videotapes. The biphase code is an excellent choice for this type of media because the code does not have a dc component to it. Another important benefit is that the code is *self-synchronizing*, or *self-clocking*. This feature allows the data stream speed to vary (tape shuttle in fast and slow search modes) while still providing the receiver with clocking information.

The *biphase L* code is commonly known as *Manchester coding*. This code is used on the *Ethernet* standard IEEE 802.3 for local area networks (LANs). Figure 26 provides examples of these codes and Table 4 summarizes their characteristics.

**Table 4** Phase-Encoded and Delay-Modulation (Miller) Codes

Biphase M (biphase-mark)
1 (hi)—transition in the middle of the clock interval
0 (low)—no transition in the middle of the clock interval
*Note:* There is always a transition at the beginning of the clock interval.
Biphase L (biphase-level/manchester)
1 (hi)—transition from high-to-low in the middle of the clock interval
0 (low)—transition from low-to-high in the middle of the clock interval
Biphase S (biphase-space)
1 (hi)—no transition in the middle of the clock interval
0 (low)—transition in the middle of the clock interval
*Note:* There is always a transition at the beginning of the clock interval.
Differential Manchester
1 (hi)—transition in the middle of the clock interval
0 (low)—transition at the beginning of the clock interval
Miller/delay modulation
1 (hi)—transition in the middle of the clock interval
0 (low)—no transition at the end of the clock interval unless followed by a zero

## Multilevel Binary Codes

Codes that have more than two levels representing the data are called **multilevel binary** codes. In many cases the codes will have three levels. We have already examined two of these codes in the RZ group: RZ (bipolar) and RZ-AMI. Also included in this group are *dicode NRZ* and *dicode RZ*. Table 5 summarizes the multilevel binary codes.

**Multilevel Binary**
codes that have more than two levels representing the data

**Table 5** Multilevel Binary Codes

| | |
|---|---|
| Dicode NRZ | One-to-zero and zero-to-one data transitions change the signal polarity. If the data remain constant, then a zero-level is output. |
| Dicode RZ | One-to-zero and zero-to-one data transitions change the signal polarity in half-step voltage increments. If the data don't change, then a zero-voltage level is output. |



## 5 Coding Principles

An ideal digital communications system is error-free. Unfortunately, a digital transmission will occasionally have an error. Modifications to the data can provide an increase in the receive system's capability to detect and possibly correct the error. Suppose that we transmit a zero (0) or a one (1). If either data value changes, then we have an error. How can the chance of an error be decreased? The process of decreasing an error depends on the transmission system being used and the digital encoding and modulation techniques employed. Even if the chances of detecting and correcting the error are increased, there is still some probability of receiving a data-bit error in the received message, but if the error can be corrected, then our message is still usable. Methods for improving the likelihood that the data-bit error can be both detected and corrected are presented next.

Our discussion on coding principles begins with a fundamental look at the basic coding techniques and establishing some rules for correcting errors. Let's first look at a very simple data system that has only two possible states. For this example let's assume that the data is just a single binary value with status indications for zero (0) and one (1). The system also requires that data-bit errors be corrected at the receiver without the need for retransmitting the data. If only a single zero (0) and a single one (1) are transmitted for each state, then the receiver will not be able to distinguish a correct bit from an error. This is the case because all the possible data values map directly to a valid value (0 or 1).

What can be done to the representative data value for each state so that an error can be detected? What if the number of binary bits representing each state are altered so that a logical zero is defined to be (00) and a logical one is defined to be (11)? Adding a data bit to each state effectively increases the distance between each code word to two. The distance can be visually shown by listing the possible binary states for the 2-bit words. The *distance* between each defined state is called the **Hamming distance,** also known as the **minimum distance, ($D_{min}$).** This relationship is shown in Figure 27.

**Hamming Distance**
the logical distance between defined states

**Minimum Distance ($D_{min}$)**
another name for the Hamming distance

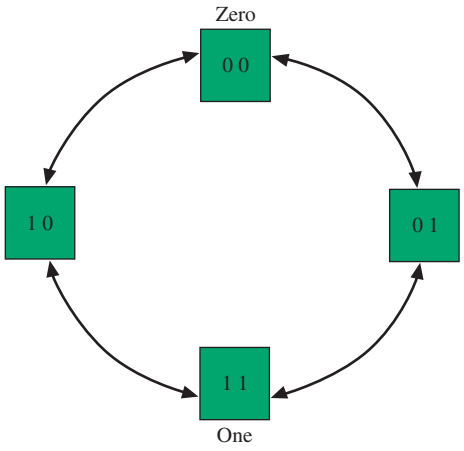


FIGURE 27 Coding for a zero (00) and a one (11) for a minimum distance, $D_{min}$, of 2.

If either 01 or 10 is received, then a data-bit error has occurred. The receive system has no trouble detecting a 1-bit error. As for correcting the bit error, each possibility, (01) and (10), can represent an error in a 0 or a 1. Therefore, increasing the number of binary bits representing each state to a minimum distance, $D_{min}$, of 2 improves the capability of the receive system to detect the error but does not improve the system's capability to correct the error.

Let's once again increase the number of binary bits for each state so that a logical zero is now defined to be 000 and a logical one is 111. The minimum distance between each code word is now 3. This relationship is depicted in Figure 28.

If an error does occur in a data bit, can a coding system with $D_{min} = 3$ correct the error? This question can be answered by looking at an example. Let's assume that the data word 011 is received. Because this data word is neither a 111 nor a 000, it can be assumed that a data bit error has occurred. Look at Figure 28 and see if you can determine which code, 000 or 111, that the received error code, 011, is *most likely* to belong to. The answer is the 111 code. The distance from 011 to 111 is 1 and the distance from 011 to 000 is 2. Therefore, it can be stated that, for a coding system with a minimum distance between each code of 3 or greater, the errors in the received code can be detected and corrected. The minimum distance

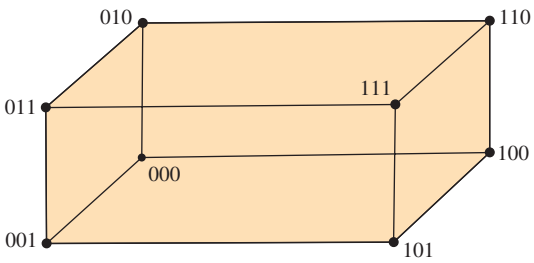


FIGURE 28 A code message for a zero (000) and a one (111) with a minimum distance, $D_{min}$, of 3.

between each code will determine the number of data-bit errors that can be corrected. The relationships for the detection and correction of data-bit errors to minimum distance is provided in Table 6.

**Table 6** Error Detection and Correction Based on $D_{min}$

Error Detection
For a minimum distance, $D_{min}$, between code words, $(D_{min} - 1)$ errors can be detected.
Error Correction
If $D_{min}$ is even, then $[(D_{min}/2) - 1]$ errors can be corrected.
If $D_{min}$ is odd, then $\frac{1}{2}(D_{min} - 1)$ errors can be corrected.

**Example 4**

*Determine the number of errors that can be detected and corrected for the distances*
*(a) 2.*
*(b) 3.*
*(c) 4.*

Solution

(a) $D_{min} = 2$; the number of errors detected is $(D_{min} - 1) = 2 - 1 = 1$.
$D_{min}$ is *even*; therefore, the number of errors corrected equals

$$(D_{min}/2) - 1 = (\tfrac{2}{2}) - 1 = 0$$

(b) $D_{min} = 3$; the number of errors detected equals $(D_{min} - 1) = 3 - 1 = 2$.
$D_{min}$ is *odd*; therefore, the number of errors corrected equals

$$\tfrac{1}{2}(D_{min} - 1) = \tfrac{1}{2}(3 - 1) = 1$$

(c) $D_{min} = 4$; the number of errors detected equals $(D_{min} - 1) = 4 - 1 = 3$.
$D_{min}$ is *even*; therefore, the number of errors corrected equals

$$(D_{min}/2) - 1 = (\tfrac{4}{2}) - 1 = 1$$

What would have to be done if all of the eight possible states shown in Figure 28 were to be transmitted and a minimum distance of 2 were to be required? To create an eight-level code with a minimum distance of 2 requires 4 bits [3 bits to provide eight levels ($2^3$) and 1 bit to provide a $D_{min}$ of 2 ($2^1$)]. This is shown in Table 7.

A code with $D_{min}$ equal to 2 cannot correct an error. For example, what if a (1 1 0 1) is received? Is the correct word (1 1 0 0) or is it (1 1 1 1)? Without sufficient overhead bits creating the required $D_{min}$, the error cannot be corrected. If the eight-level code is changed so that a 1-bit error can be corrected, 5 bits are now required to represent each word [3 bits to provide the eight levels ($2^3$) and 2 bits to provide a $D_{min}$ of 3]. The 5-bit code is shown in Table 8.

**Table 7** Eight-Level Code with a Distance of 2

| | |
|---|---|
| 0 0 0 0 (0 0 0) | 1 1 0 0 (1 0 0) |
| 0 0 0 1 | 1 1 0 1 |
| 0 0 1 1 (0 0 1) | 1 1 1 1 (1 0 1) |
| 0 0 1 0 | 1 1 1 0 |
| 0 1 1 0 (0 1 0) | 1 0 1 0 (1 1 0) |
| 0 1 1 1 | 1 0 1 1 |
| 0 1 0 1 (0 1 1) | 1 0 0 1 (1 1 1) |
| 0 1 0 0 | 1 0 0 0 |

**Table 8** Eight-Level Code with Distance 3

| | |
|---|---|
| 0 0 0 0 0 (0 0 0) | 0 1 0 1 1 (1 0 0) |
| 0 0 0 0 1 | 0 1 0 1 0 |
| 0 0 0 1 1 | 0 1 0 0 0 |
| 0 0 0 1 0 (0 0 1) | 1 1 0 0 0 (1 0 1) |
| 0 0 1 1 0 | 1 1 0 0 1 |
| 0 0 1 1 1 | 1 1 0 1 1 |
| 0 0 1 0 1 (0 1 0) | 1 1 1 1 1 (1 1 0) |
| 0 0 1 0 0 | 1 1 1 0 1 |
| 0 1 1 0 0 | 1 1 1 1 0 |
| 0 1 1 0 1 (0 1 1) | 1 0 1 1 0 (1 1 1) |
| 0 1 1 1 1 | |
| 0 1 1 1 0 | |

To see how the code can correct, let's assume that the received code word is (0 0 1 1 1). To determine the distance of this code word to any of the possible receive codes, simply XOR the received code word with any of the eight possible valid codes. The XOR operation that yields the smallest result tells us which is the correct code. This process is demonstrated in Example 5.

**Example 5**

*Determine the distance for a received code of (0 0 1 1 1), shown in Table 7, to all the possible correct codes by XORing the received code with all the possible correct codes. The result with the least number of bit-position differences is most likely the correct code. Then state which is most probably the correct code based on the minimum distance.*

**Solution**

```
0 0 1 1 1          0 0 1 1 1          0 0 1 1 1
0 0 0 0 0          0 0 0 1 0          0 0 1 0 1
---------          ---------          ---------
0 0 1 1 1  (3)     0 0 1 0 1  (2)     0 0 0 1 0  (1)

0 0 1 1 1          0 0 1 1 1          0 0 1 1 1
0 1 1 0 1          0 1 0 1 1          1 1 0 0 0
---------          ---------          ---------
0 1 0 1 0  (2)     0 1 1 0 0  (2)     1 1 1 1 1  (5)
```

```
0 0 1 1 1
1 1 1 1 1
1 1 0 0 0   (2)

0 0 1 1 1
1 0 1 1 0
1 0 0 0 1   (2)
```

Therefore, based on comparing the received code with all the possible correct codes, the most likely code is (0 0 1 0 1), which is the code for (0 1 0).



## 6 Code Error Detection and Correction

Codes and raw digital data are being transmitted with increasing volume every year. Unless some means of error detection is used, it is not possible to know when errors have occurred. These errors are caused by noise and transmission system impairments. In contrast, it is obvious when a voice transmission has been impaired by noise or equipment problems.

Redundancy is used as the means of error detection when codes and digital data are transmitted. A basic redundancy system transmits everything twice to make sure that exact correlation exists. Transmitting redundant data uses bandwidth, which slows the transfer of data. Fortunately, schemes have been developed that do not require such a high degree of redundancy and provide for a more efficient use of available bandwidth.

### Parity

The most common method of error detection is the use of parity. A single bit called the *parity bit* is added to each code representation. If it makes the total number of 1s even, it is termed *even parity*, and an odd number of 1s is *odd parity*. For example, if the ASCII code for A is to be generated, the code is P1000001 and P is the parity bit. Odd parity would be 11000001 because the number of 1s is now 3 (see Figure 29). The receiver checks for parity. If an even number of 1s occurs in a character grouping (digital word), an error is indicated and the receiver usually requests a retransmission. Unfortunately, if two errors (an even number) occur, parity systems will not indicate an error. In many systems a burst of noise causes two or more errors, so that more elaborate error-detection schemes may be required.

Many circuits are used as parity generators and/or checkers. A simple technique is shown in Figure 30. If there are $n$ bits per word, $n - 1$ exclusive-OR

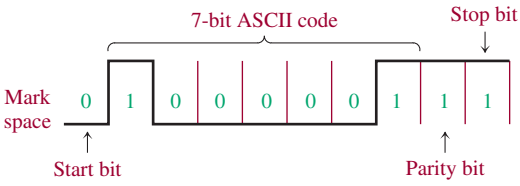


FIGURE 29 ASCII code for A with odd parity. Note that lsb $b_1$ is the first bit of the digital word transmitted.

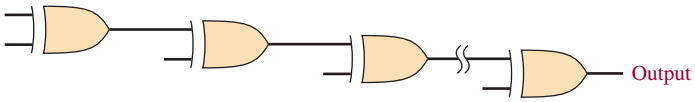





| | | Output |
|---|---|---|
| A | B | Y=A⊕B |
| 0 | 0 | 0 |
| 0 | 1 | 1 |
| 1 | 0 | 1 |
| 1 | 1 | 0 |

FIGURE 30 Serial parity generator and/or checker.

(XOR) gates are needed. The first two bits are applied to the first gate and the remaining individual bits to each subsequent gate. The output of this circuit will always be a 1 if there is an odd number of 1s and a 0 for an even number of 1s. If odd parity is desired, the output is fed through an inverter. When used as a parity checker, the word and parity bit is applied to the inputs. If no errors are detected, the output is low for even parity and high for odd parity.

When an error is detected there are two basic system alternatives:

1. An automatic request for retransmission (ARQ)
2. Display of an unused symbol for the character with a parity error (called **symbol substitution**)

**Symbol Substitution**
displaying an unused symbol for the character with a parity error

Most systems use a request for retransmission. If a block of data is transmitted and no error is detected, a positive acknowledgment (ACK) is sent back to the transmitter. If a parity error is detected, a negative acknowledgment (NAK) is made and the transmitter repeats that block of data.

## Block Check Character

A more sophisticated method of error detection than simple parity is needed in higher data-rate systems. At higher data speeds, telephone data transmission is usually synchronous and blocked. A block is a group of characters transmitted with no time gap between them. It is followed by an *end-of-message* (EOM) indicator and then a **block check character (BCC).** A block size is typically 256 characters. The transmitter uses a predefined algorithm to compute the BCC. The same algorithm is used at the receiver based on the block of data received. The two BCCs are compared and, if identical, the next block of data is transmitted.

**Block Check Character (BCC)**
method of error detection involving sending a block of data, then an end of message indicator, then a block check character representing characteristics of the data that was sent

**Longitudinal Redundancy Check (LRC)**
extending parity into two dimensions

There are many algorithms used to generate a BCC. The most elementary one is an extension of parity into two dimensions, called the **longitudinal redundancy check (LRC).** This method is illustrated with the help of Figure 31. Shown is a small block of 4-bit characters using odd parity. The BCC is formed as an odd-parity bit for each vertical column. Now suppose that a double error occurred in character 2 as shown in Figure 31(b). With odd parity, the third and fourth bits from the left in the BCC should be zeros; instead they are 1s. As described previously, simple parity would not pick up this error. With the BCC, however, the error is detected. If a single error occurs [Figure 31(c)], the erroneous bit can be pinpointed as the intersection of the row and column containing the error. Correction is achieved by inverting the bad bit. If a double error occurs in a column, the scheme is defeated.

The error location process just described is not usually utilized. Rather, the receiver checks for character and LRC errors and if either (or both) occur, a

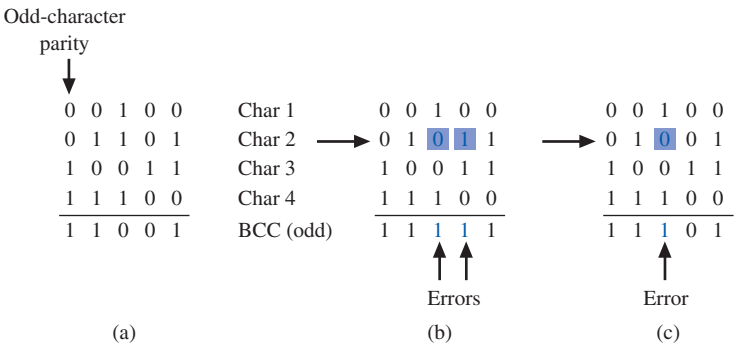


FIGURE 31 LRC error detection.

retransmission is requested. Occasionally, an error will occur in the BCC. This is unavoidable, but the only negative consequence is an occasional unnecessary retransmission. This scheme is useful in low noise environments.

## Cyclic Redundancy Check

**Cyclic Redundancy Check**
method of error detection involving performing repetitive binary division on each block of data and checking the remainders

One of the most powerful error-detection schemes in common use is the **cyclic redundancy check** (CRC). The CRC is a mathematical technique that is used in synchronous data transmission. It can effectively catch 99.95 percent of transmission errors.

In the CRC technique, each string of bits is represented by a polynomial function. The technique is done by division. It is illustrated as follows:

$$\frac{M(x)}{G(x)} = Q(x) + R(x) \tag{11}$$

where $M(x)$ is the binary data, called the message function, and $G(x)$ is a special code for which the message function is divided, called the generating function. The process yields a quotient function, $Q(x)$, and a remainder function, $R(x)$. The quotient is not used, and the remainder, which is the CRC block check code **(BCC),** is attached to the end of the message. This is called a **systematic code,** where the BCC and the message are transmitted as separate parts within the transmitted code. At the receiver, the message and CRC check character pass through its block check register BCR. If the register's content is zero, then the message contains no errors.

**BCC**
block check code, the code generated when creating the CRC transmit code

**Systematic Code**
a code in which the message and block check code are transmitted as separate parts within the same transmitted code

Cyclic codes are popular not only because of their capability to detect errors but also because they can be used in high-speed systems. They are easy to implement, requiring only the use of shift registers, EXOR gates, and feedback paths. Cyclic block codes are expressed as **(n, k) cyclic codes,** where

$n$ = length of the transmitted code
$k$ = length of the message

**(*n*, *k*) Cyclic Code**
nomenclature used to identify cyclic codes in terms of their transmitted code length ($n$) and message length ($k$)

For example, a (7, 4) cyclic code simply means that the bit length of the transmitted code is 7 bits ($n = 7$) and the message length is 4 bits ($k = 4$). This information also tells us the length or number of bits in the block check code (BCC), which is the

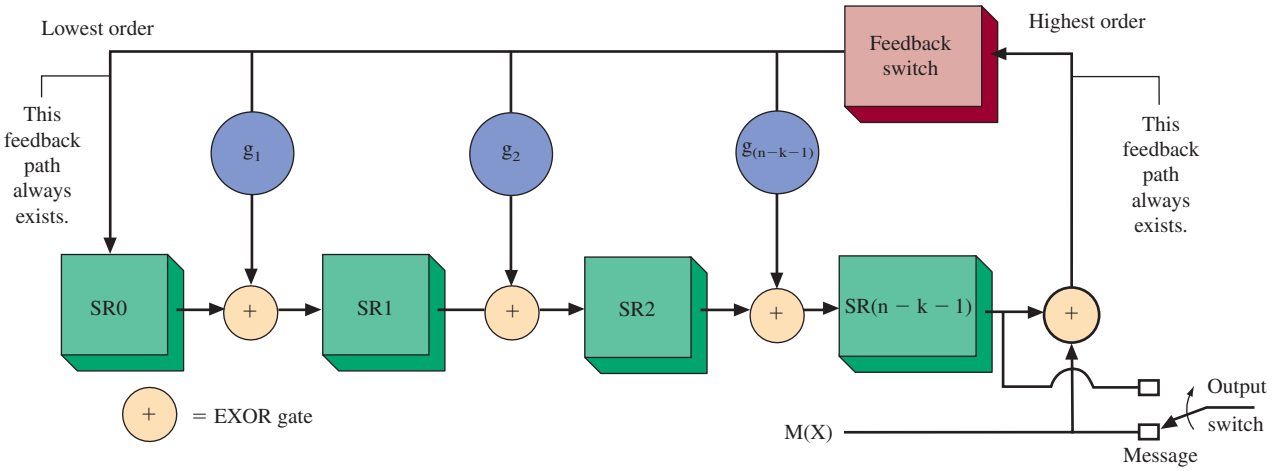


FIGURE 32 CRC code generator for an (*n, k*) cyclic code.

code transmitted with each word. The number of bits in the BCC is $(n - k)$. This relationship is expressed as

$$\text{BCC length} = n - k \tag{12}$$

This code is combined with the message to generate the complete transmit binary code and is used at the receiver to determine if the transmitted message contains an error. The general form for systematic (*n, k*) CRC code generation is shown in Figure 32.

The number of shift registers required in the CRC generating circuit is the length of the block check code (BCC), which is $(n - k)$. For a (7, 4) cyclic code, the number of shift registers required to generate the BCC is $7 - 4 = 3$. Note that the highest order of the generating polynomial described next (3 in this case, from $x^3$) is also the number of shift registers required.

**Generating Polynomial** defines the feedback paths to be used in the CRC generating circuit

Construction of a CRC generating circuit is guided by the **generating polynomial,** $G(x)$. The feedback paths to each XOR gate are determined by the coefficients for the generating polynomial, $G(x)$. If the coefficient for a variable is 1, then a feedback path exists. If the coefficient is 0, then there isn't a feedback path. The general form for the CRC generator with respect to $G(x)$ is

$$G(x) = 1 + g_1x + g_2x^2 + \cdots + g_{n-k-1}x^{n-k-1} + x^{n-k} \tag{13}$$

The lowest-order value is $x^0 = 1$; therefore, the feedback always exists. This is indicated in Figure 32.

The highest-order value, which varies, also has a coefficient of 1. In CRC circuits, the lowest- and highest-order polynomial values have a coefficient of 1. This feedback must always exist because of the cyclic nature of the circuit. For example, if the generating polynomial expression is $G(x) = 1 + x + x^3$, then the feedback paths are provided by 1 ($x^0$), $x$, and $x^3$. The coefficient for $x^2$ is 0; therefore, no feedback is specified.

In addition to the EXOR gates and shift registers for the circuit shown in Figure 32, the CRC generator contains two switches for controlling the shifting of the message and code data to the output. The procedure for CRC code generation using this circuit is as follows:

**CRC Code Generation: Procedure for Using Figure 32**

1. Load the message bits serially into the shift registers. This requires:
   Output switch connected to the message input $M(x)$,
   Feedback switch closed.
   *Note:* $k$ shifts are performed; $k$ is obtained from the $(n, k)$ specification. The $k$ shifts load the message into the shift registers and at the same time the message data are serially sent to the output and the BCC is generated.
2. After completing the transmission of the $k$th bit, the feedback switch is opened and the output switch is changed to select the shift registers.
3. The contents of the shift registers containing the BCC are shifted out using $(n - k)$ shifts. *Note:* The total number of shifts to the CRC generator circuit is $n$, which is the length of the transmit code.

The operation of this circuit can be treated mathematically as follows. The message polynomial, $M(x)$, is being multiplied by $x^{(n-k)}$. This results in $(n - k)$ zeros being added to the end of the message polynomial, $M(x)$. The number of zeros is equal to the binary size of the block check code (BCC). The generator polynomial is then modulo 2 divided into the modified $M(x)$ message. The remainder left from the division is the block check code (BCC). In systematic form, the BCC is appended to the original message, $M(x)$. The completed code is ready for transmission. An example of this process and an example of implementing a cyclic code using Figure 32 is given in Example 6.

**Example 6**

*For a (7, 4) cyclic code and given a message polynomial $M(x) = (1\ 1\ 0\ 0)$ and a generator polynomial $G(x) = x^3 + x + 1$, determine the BCC (a) mathematically and (b) using the circuit provided in Figure 32.*

**Solution**

(a) The code message $M(x)$ defines the length of the message (4 bits). The number of shift registers required to generate the block check code is determined from the highest order in the generating polynomial $G(x)$, which is $x^3$. This indicates that three shift registers will be required, so we will pad the message (1 1 0 0) with three zeros to get (1 1 0 0 0 0 0). Remember, a (7, 4) code indicates that the total length of the transmit CRC code is 7 and the

$$\text{BCC length} = n - k \tag{12}$$

The modified message is next divided by the generator polynomial, $G(x)$. This is called modulo-2 division.

$$G(x)\overline{)M(x) \cdot x^{n-k}}$$

$$\begin{array}{r} 1110 \\ 1011\overline{)1100000} \\ \underline{1011} \\ 1110 \\ \underline{1011} \\ 1010 \\ \underline{1011} \\ 010 \end{array}$$

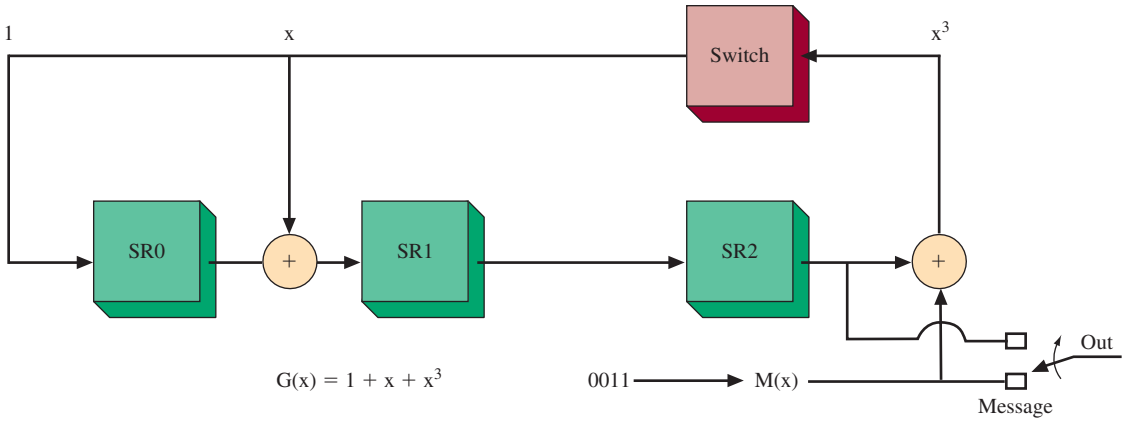


FIGURE 33 CRC code generator for a (7, 4) cyclic code using a generator polynomial $G(x) = x^3 + x + 1$.

The remainder 010 is attached to $M(x)$ to complete the transmit code, $C(x)$. The transmit code word is 1100010.

(b) Next, we use the circuit in Figure 32 to generate the same cyclic code for the given $M(x)$ and $G(x)$. The CRC generating circuit can be produced from the general form provided in Figure 32. $G(x) = x^3 + x + 1$ for the (7, 4) cyclic code. This information tells us the feedback paths (determined by the coefficients of the generating polynomial expression equal to 1) as well as the number of shift registers required, $(n - k)$. The CRC generating circuit is provided in Figure 33. The serial output sequence and the shift register contents for each shift are shown in Table 9.

**Table 9** The Shift Sequence for Example 6

| Data [$M(x)$] | | | | | Register Contents | | | |
|---|---|---|---|---|---|---|---|---|
| $x^0$ | $x^1$ | $x^2$ | $x^3$ | Shift Number | SR0 | SR1 | SR2 | Output |
| 0 | 0 | 1 | 1 | 0 | 0 | 0 | 0 | |
| | 0 | 0 | 1 | 1 | 1 | 1 | 0 | 1 |
| | | 0 | 0 | 2 | 1 | 0 | 1 | 1 |
| | | | 0 | 3 | 1 | 0 | 0 | 0 |
| | | | – | 4 | 0 | 1 | 0 | 0 |

The result in both cases for Example 8 is a transmitted code of 1100010, where 1100 is the message $M(x)$ and 010 is the BCC. The division taking place in part (a) of Example 8 is modulo-2 division. Remember, modulo-2 is just an XORing of the values. The division of $G(x)$ into $M(x)$ requires only that the divisor has the same number of binary positions as the value being divided (the most significant position must be a 1). The value being divided does not have to be larger than the divisor.

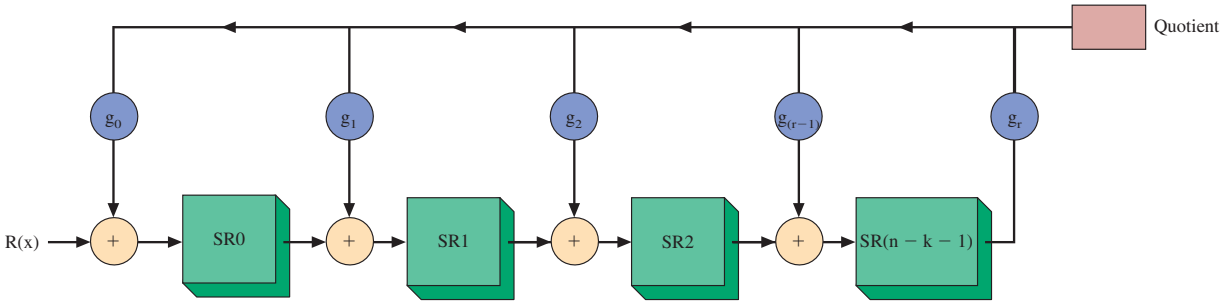


FIGURE 34 A CRC divide circuit for the general form of $G(x) = g_0 + g_1x + g_2x^2 + \cdots + g_rx^r$.

## CRC Code-Dividing Circuit

At the receive side, the received code is verified by feeding the received serial CRC code into a *CRC dividing circuit*. The dividing circuit has $(n - k)$ shift registers. The general form for a CRC divide circuit is given in Figure 34.

The arrangement of the feedback circuit and the shift registers depends on the generator polynomial, $G(x)$, and the coefficients for each expression. If the coefficient for $X$ is 1, then a feedback path to an EXOR is provided for that shift register. If the coefficient is 0, then there is not a feedback path to the input of the respective shift register. The number of shift registers required in the circuit is still $(n - k)$. The circuit requires $k$ shifts to check the received data for errors. The result (or remainder) of the shifting (division) should be all 0s. The remainder is called the **syndrome.** If the syndrome contains all 0s, then it is assumed that the received data are correct. If the syndrome is a nonzero value, then bit error(s) have been detected. In most cases the receive system will request a retransmission of the message. This is the case for ethernet computer networks. In limited cases, the code *can* then be corrected by adding the syndrome vector to the received vector. This method of correction requires the use of a look-up table to determine the correct word. Example 7 demonstrates the use of the CRC detection circuit using the information from Example 6.

**Syndrome**
the value left in the CRC dividing circuit after all data have been shifted in

In Example 7 the transmitted code length is seven, $(n = 7)$; the message length is four, $(k = 4)$; and the code length is three, $(n - k) = (7 - 4) = 3$.

### Example 7

*The serial data stream 0 1 0 0 0 1 1 was generated by a (7, 4) cyclic coding system using the generator polynomial $G(x) = 1 + x + x^3$ (see Example 6). Develop a circuit that will check the received data stream for bit errors. Verify your answer both (a) mathematically and (b) by shifting the data through a CRC divide circuit.*

#### Solution

(a) To verify the data mathematically requires that the *received data* be divided by the coefficients defining generator polynomial, $G(x)$. This is similar to the procedure used in Example 6 except the data being divided contains the complete code.

$$
\begin{array}{r}
1110 \\
1011\overline{)1100010} \\
\underline{1011} \\
1110 \\
\underline{1011} \\
1011 \\
\underline{1011} \\
000
\end{array}
$$

The syndrome (remainder) is zero; therefore, the received data do not contain any errors.

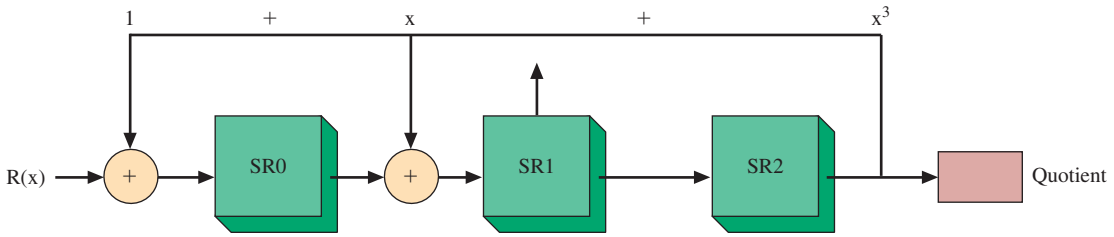


FIGURE 35 A CRC divide circuit for $G(x) = 1 + x + x^3$.

(b) The CRC divide circuit is generated from the CRC generator polynomial expression, $G(x)$. $G(x)$ for this system is $1 + x + x^3$. The circuit is created using the form shown in Figure 35. The shift register contents are first reset to zero. Next, the received data are input to $R(x)$. The data are shifted serially into the circuit. The results of the shifting are provided in Table 10. A total of $n$ shifts are required.

The result of the shifting in the data produced all 0s remaining in the shift registers. Therefore, the syndrome is 0, which indicates that the received data do not contain any bit errors.

**Table 10** The Shift Sequence for Example 7

| Code lsb | Code | Code | Code msb | Data lsb | Data | Data msb | Shift Number | Register Contents SR0 | Register Contents SR1 | Register Contents SR2 | Output |
|---|---|---|---|---|---|---|---|---|---|---|---|
| 0 | 1 | 0 | 0 | 0 | 1 | 1 | | 0 | 0 | 0 | |
| 0 | 1 | 0 | | 0 | 0 | 1 | 1 | 1 | 0 | 0 | 1 |
| 0 | 1 | | | 0 | 0 | 0 | 2 | 1 | 1 | 0 | 1 |
| 0 | | | | 1 | 0 | 0 | 3 | 0 | 1 | 1 | 0 |
| | | | | 0 | 1 | 0 | 4 | 1 | 1 | 1 | 0 |
| | | | | | 0 | 1 | 5 | 1 | 0 | 1 | 0 |
| | | | | | | 0 | 6 | 0 | 0 | 0 | 1 |
| | | | | | | – | 7 | 0 | 0 | 0 | 0 |

**Forward Error-Correcting** error-checking techniques that permit correction at the receiver, rather than retransmitting the data

## Hamming Code

The error-detection schemes thus far presented require retransmission if errors occur. Techniques that allow correction at the receiver are called **forward error-correcting**

(FEC) codes. The basic requirement of such codes is for sufficient redundancy to allow error correction without further input from the transmitter. The **Hamming code** is an example of an FEC code named for R. W. Hamming, an early developer of error-detection/correction systems.

**Hamming Code**
a forward error-checking technique named for R. W. Hamming

If $m$ represents the number of bits in a data string and $n$ represents the number of bits in the Hamming code, $n$ must be the smallest number such that

$$2^n \geq m + n + 1 \tag{14}$$

Consider a 4-bit data word 1101. The minimum number of parity bits to be used is 3 when Equation (14) is referenced. A possible setup, then, is

| | | | | | | | |
|---|---|---|---|---|---|---|---|
| $P_1$ | $P_2$ | 1 | $P_3$ | 1 | 0 | 1 | |
| 1 | 2 | 3 | 4 | 5 | 6 | 7 | bit location |

We'll let the first parity bit, $P_1$, provide even parity for bit locations 3, 5, and 7. $P_2$ does the same for 3, 6, and 7, while $P_3$ checks 5, 6, and 7. The resulting word, then, is

| | | | | | | | |
|---|---|---|---|---|---|---|---|
| 1 | 0 | 1 | 0 | 1 | 0 | 1 | |
| 1 | 2 | 3 | 4 | 5 | 6 | 7 | bit location |
| $P_1$ | $P_2$ | | $P_3$ | | | | |

When checked, a 1 is assigned to incorrect parity bits, while a 0 represents a correct parity bit. If an error occurs so that bit location 5 becomes a 0, the following process takes place. $P_1$ is a 1 and indicates an error. It is given a value of 1 at the receiver. $P_2$ is not concerned with bit location 5 and is correct and therefore given a value of 0. $P_3$ is incorrect and is therefore assigned a value of 1. These three values result in the binary word 101. Its decimal value is 5, and this means that bit location 5 has the wrong value and the receiver has pinpointed the error without a retransmission. It then changes the value of bit location 5 and transmission continues. The Hamming code is not able to detect multiple errors in a single data block. More complex (and more redundant) codes are available if necessary.

## Reed–Solomon Codes

Reed–Solomon (RS) codes are also forward error-correcting codes (FEC) like the Hamming code. They belong to the family of BCH (Bose–Chaudhuri–Hocquenghem) codes. Unlike the Hamming code, which can detect only a single error, RS codes can detect multiple errors, which makes RS codes very attractive for use in CD players because a CD can contain scratches in its surface, and in mobile communications, where a burst of errors is expected.

RS codes often employ a technique called **interleaving** to enable the system to correct multiple data-bit errors. Interleaving is a technique used to rearrange the data into a nonlinear ordering scheme to improve the chance of correcting data errors. The benefit of this technique is that burst errors can be corrected because the likelihood is that all the data message won't be destroyed. For example, a large scratch on a CD disk will cause the loss of large amounts of data in a track; however,

**Interleaving**
a technique used to rearrange the data into a nonlinear ordering scheme to improve the chance of data correction

if the data bits representing the message are distributed over several tracks in different blocks, then the likelihood that they can be recovered is increased. The same is also true for a message transmitted over a communications channel. Burst errors will cause the loss of only a portion of the message data, and if the Hamming distance is large enough, the message can be recovered.

The primary disadvantage of implementing the RS coding scheme is the time delay for encoding (interleaving the data) at the transmitter and decoding (deinterleaving the data) at the receiver. In applications such as a CD ROM, data size and the delay are not a problem, but implementing RS codes in mobile communications could create significant delay problems in real-time applications and possibly a highly inefficient use of data bandwidth.



## 7 DSP

DSP is a technique that uses high-speed processors to filter and process a digital signal. The digital signal might have originated from a microphone or it might have come from a radio transmitter. Typically, the original signal is analog and must be converted to a digital format for processing. In other cases, the digital signal might have originated from a digital signal source such as a CD player or a digital video recorder. In this case, the digital signal can be processed directly.

DSP processing and filtering are used today in almost every area of electronic communication. This includes their use in mobile phones, digital television, radio, and test equipment. The mathematics behind digital signal processing is quite complex and is beyond the scope of this text; however, the objective of this section is to show the reader how basic digital filtering is accomplished with DSP.

The main advantages of digital filters are as follows:

1. A digital filter is very stable and not subject to drift. (The output response of an analog filter can vary with a change in temperature or component aging.)
2. Digital filters can be applied to low-frequency and high-frequency RF applications.
3. A digital filter can be programmable, enabling the filter characteristics to be changed without requiring a hardware circuit change.
4. Fast DSP processing chips are commercially available that enable easy integration of DSP algorithms in an electronic communication filtering or signal processing system.

Filter circuits have changed significantly over the years. Passive analog filters, used for many years, use resistors, capacitors, and inductors to create the wave shaping circuit. Key limitations of passive filters are the physical size of the components and the tendency of the circuit's output response to change with both temperature and component aging. Examples of a second-order passive, low-pass filter are provided in Figure 36(a) and (b). These filters can be implemented with one inductor, one capacitor, and one resistor as shown. The component values shown produce a cutoff frequency of 1 kHz as shown in Figure 36(c).

The next evolution in filter circuits are active filters. These circuits employ operational amplifiers or some other form of active components such as BJTs or FETs in the filter circuit. These filters do not require the use of bulky (and lossy) inductors and have an improvement in the output response and stability. Key limitations of

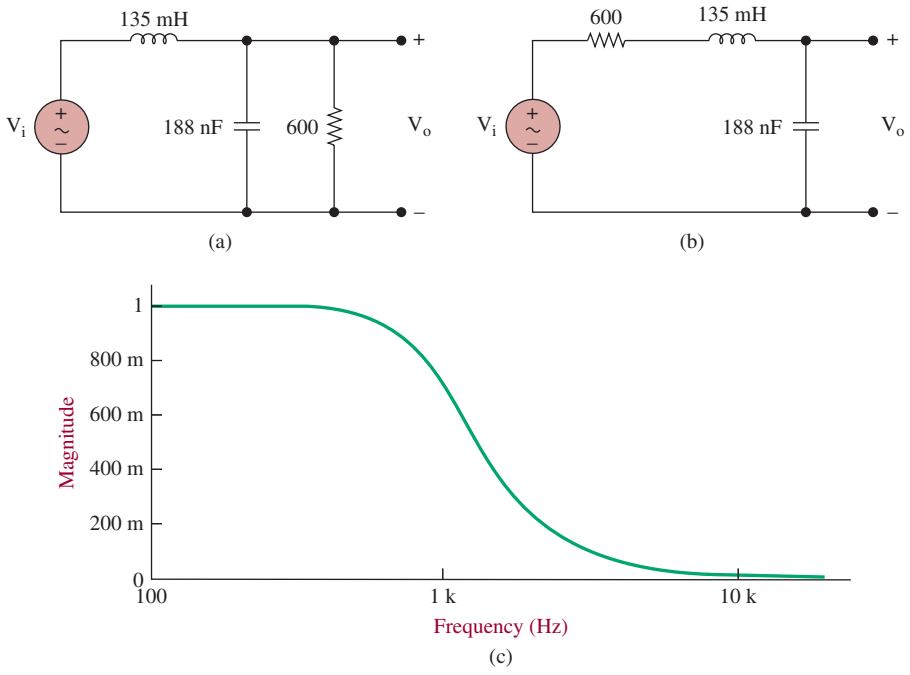


FIGURE 36 (a), (b) Passive implementations for a second-order low-pass Butterworth filter and (c) a plot of the frequency response.

active filters are also the tendency of the circuit's output response to change with both temperature and component aging. The advantage of the active filter, compared with a passive filter, is that it can be smaller in size. Figure 37 shows one possible active version of an active low-pass filter. This filter has the same frequency response as shown in Figure 36(c).

## DSP Filters

The modern approach to filtering and processing signals is DSP. In DSP, filters are implemented by using a mathematical operation or algorithm. The algorithm is input

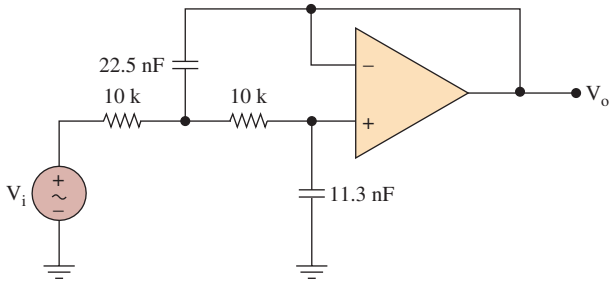


FIGURE 37 A second-order low-pass Butterworth active filter.

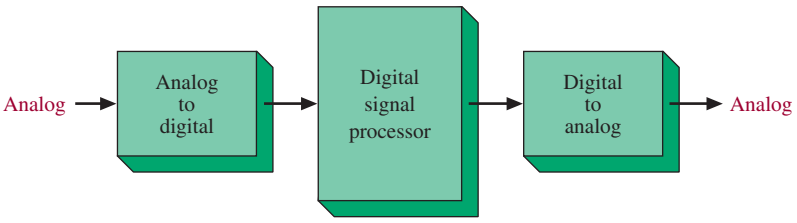


FIGURE 38 The block diagram for a digital signal processing circuit.

into a computer, microprocessor, or a dedicated digital signal-processor circuit. This algorithm takes the digitized version of the analog signal and produces an output stream that represents the filtered or processed signal. A digital-to-analog converter then transforms the digital signal into its analog equivalent.

A block diagram of the DSP process is provided in Figure 38. The first step in the DSP process is to convert the analog signal into a digital data stream. This is accomplished by using an analog-to-digital (A/D) converter circuit. The basic guideline for the A/D conversion process is as follows:

The sample frequency (*fs*) must satisfy the Nyquist criteria, $fs \geq 2\,fa$, which means that the sample frequency (*fs*) must be at least twice the highest analog input frequency (*fa*).

Next, the digital data stream is fed into the digital signal processor. DSP processors are available from companies such as Analog Devices and Texas Instruments that provide the necessary hardware architecture to facilitate high-speed processing of the digital data. Inside the DSP unit, is the computational algorithm called the **difference equation.** The difference equation makes use of the present digital sample value of the input signal along with a number of previous input values, and possibly previous output values, to generate the output signal. Those algorithms that employ previous output values are said to be **recursive** or **iterative.** A recursive filter is also called an **IIR (infinite impulse response) filter.**

**Difference Equation**
makes use of the present digital sample value of the input signal along with a number of previous input values and possibly previous output values to generate the output signal

**Recursive or Iterative**
algorithms that employ previous output values to generate the current output

**IIR Filter**
another name for a recursive filter

**Nonrecursive**
algorithm that does not include previous output values to generate the current output

**FIR Filter**
another name for a nonrecursive filter

A typical form for a second-order recursive algorithm is

$$y_0 = a_0x_0 + a_1x_1 + a_2x_2 + b_1y_1 + b_2y_2$$

where $y_0$ is the present output value; $x_0$ the present input value; and $x_1$, $x_2$, $y_1$, and $y_2$ are previous input and output values. This algorithm is said to be of second order because it uses up to two past values saved in memory.

A **nonrecursive** algorithm would not include previous output values ($y_1$, $y_2$, . . .). The *a* and *b* quantities are the coefficients of the difference equation, and their values determine the type of filter and the cutoff frequency or frequencies. Finding these values requires tedious calculations when done by hand or calculator. The process is beyond the scope of this book, but there are computer programs that determine the coefficients based on specifications entered by the user, such as type of filter, cutoff frequencies, and attenuation requirements. The nonrecursive filter is also called a **FIR (finite input response) filter.**

The following equation is an example of a second-order, recursive, low-pass Butterworth filter. The cutoff frequency is 1 kHz.

$$y_0 = 0.008685\,x_0 + 0.01737\,x_1 + 0.008685\,x_2 + 1.737\,y_1 - 0.7544\,y_2$$

To better illustrate the computation process of a DSP algorithm, let us resort to an Excel spreadsheet with three columns, as shown in Table 11:

**Table 11** An Example of the Computational Process for the DSP Difference Equation

| $f = 500$ | | | $f = 1000$ | | | $f = 2000$ | | |
|---|---|---|---|---|---|---|---|---|
| ***n*** | ***x*** | ***y*** | ***n*** | ***x*** | ***y*** | ***n*** | ***x*** | ***y*** |
| −2 | 0 | 0 | −2 | 0 | 0 | −2 | 0 | 0 |
| −1 | 0 | 0 | −1 | 0 | 0 | −1 | 0 | 0 |
| 0 | 0 | 0 | 0 | 0 | 0 | 0 | 0 | 0 |
| 1 | 0.09983 | 0.00087 | 1 | 0.19866 | 0.00173 | 1 | 0.38941 | 0.00338 |
| 2 | 0.19866 | 0.00495 | 2 | 0.38941 | 0.00980 | 2 | 0.71734 | 0.01881 |
| 3 | 0.29551 | 0.01475 | 3 | 0.56463 | 0.02895 | 3 | 0.93203 | 0.05374 |
| 4 | 0.38941 | 0.03187 | 4 | 0.71734 | 0.06182 | 4 | 0.99957 | 0.10934 |
| 5 | 0.47941 | 0.05718 | 5 | 0.84146 | 0.10916 | 5 | 0.90932 | 0.18088 |
| 6 | 0.56463 | 0.09093 | 6 | 0.93203 | 0.17006 | 6 | 0.67551 | 0.25897 |

(a) The sample number $n$.

(b) The input sequence $x$, which is a sine wave sampled at a given sampling rate. In this case, a sample rate $10\pi$ times the cutoff frequency is being used.

(c) The output sequence $y$, generated by the DSP algorithm.

Three different input frequencies were used: 500, 1000, and 2000. These frequencies are an octave below cutoff, at cutoff, and an octave above cutoff.

Observe in Table 11 the computational process for the first few samples of a second-order low-pass Butterworth filter with a cutoff frequency of 1000 Hz. For $f = 1000$, at sample number 3, $x_0 = 0.56463$, $x_1 = 0.38941$, and $x_2 = 0.19866$, $y_0 = 0.02895$, $y_1 = 0.00980$, and $y_2 = 0.00173$. $x_0$, $y_0$ are the present values, $x_1$, $y_1$, $x_2$, $y_2$ are the previous values. This is repeated for all samples to create the output sequence ($y$). Because of the computation intensive operation of the algorithm, it is obvious at this point why dedicated processors are required to implement real-time digital filtering and signal processing.

Plotting the values from the three processes for the first 100 samples yields the sequences shown in Figure 39(a–c).

As expected, the output amplitude at 1000 Hz (see Figure 39[a]), which is the cutoff frequency, is about 0.7, which is a 3-dB attenuation. The phase shift is clearly 90°, as it should be for this filter at the cutoff frequency. At 2000 Hz, twice the cutoff frequency (see Figure 39[b]), the nominal output should be 0.243, which is about what we see on the graph. At 500 Hz, an octave below the cutoff frequency (see Figure 39[c]), the output level is practically the same as the input level, which is as expected in the passband of the filter. The phase shift at this frequency has a theoretical value of 43° (lagging). The phase shift shown on the plot is consistent with that value.

This section has demonstrated that a Butterworth digital filter is equivalent in operation to its analog counterpart. The computational steps of the difference equation were presented and verified in terms of the output signal at three different frequencies. It was demonstrated that the digital filter uses a computational algorithm

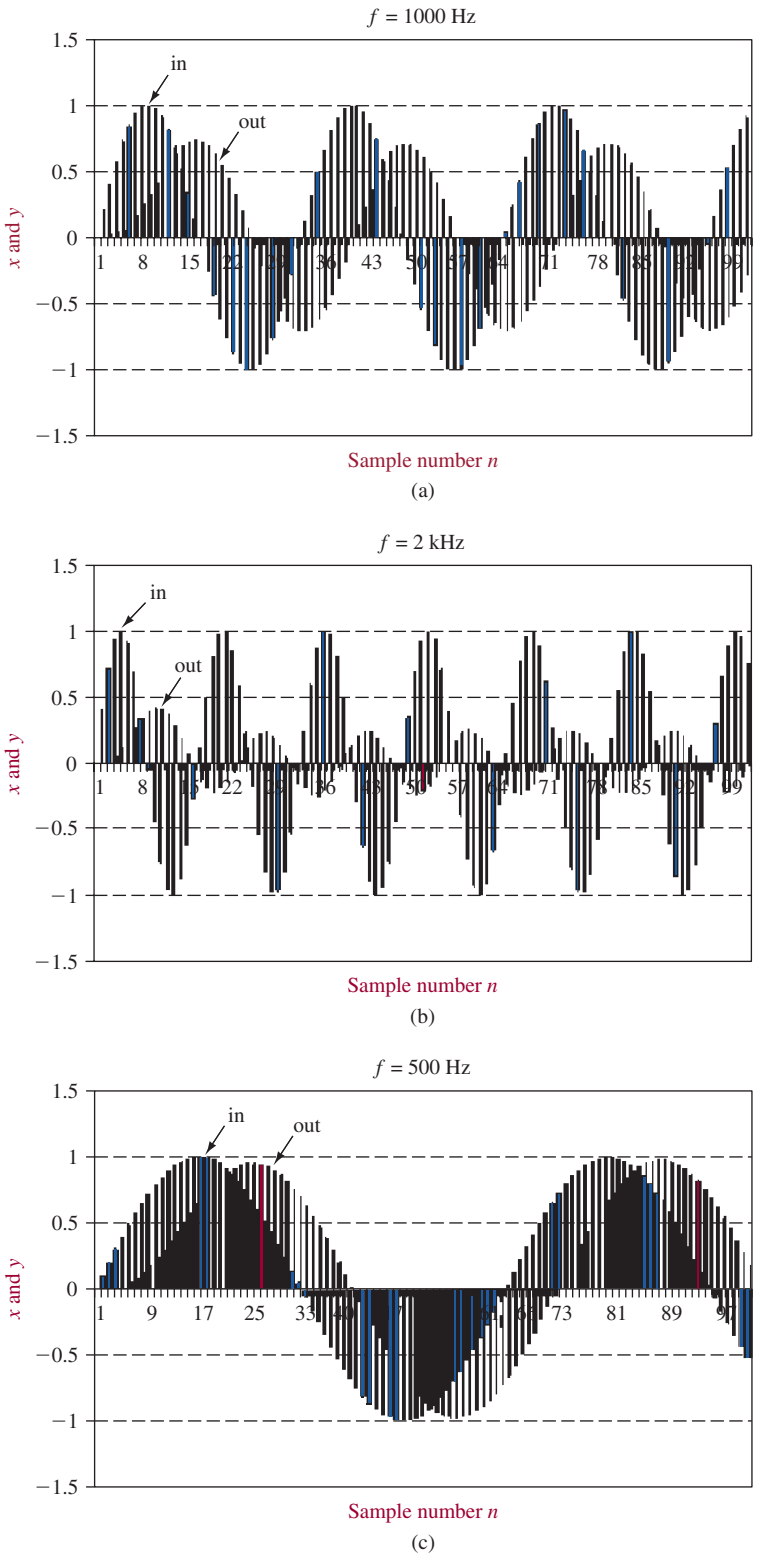


FIGURE 39 Input and output sequences for a second-order low-pass Butterworth filter at 3 frequencies: (a) 1000, (b) 2000 Hz, and (c) 500.

in a DSP structure. The passive and active filters require electrical components such as resistors, capacitors, inductors, and operational amplifier.



## 8 TROUBLESHOOTING

Digital communications provide vital links to transfer information in today's world. Digital data are used in every aspect of electronics in one form or another. In this section we will look at digital pulses and the effects that noise, impedance, and frequency have on them. Digital communications troubleshooting requires that the technician be able to recognize digital pulse distortion and to identify what causes it.

After completing this section you should be able to

- Identify a good pulse waveform
- Identify frequency distortion
- Describe effects of incorrect impedance on the square wave
- Identify noise on a digital waveform

### The Digital Waveform

A square wave signal is a digital waveform and is illustrated in Figure 40. The square wave shown is a periodic wave that continually repeats itself. It is made up of a positive alternation and a negative alternation. The ideal square wave will have sides that are vertical. These sides represent the high-frequency components. The flat-top and bottom lines represent the low-frequency components. A square wave is composed of a fundamental frequency and an infinite number of odd harmonics.

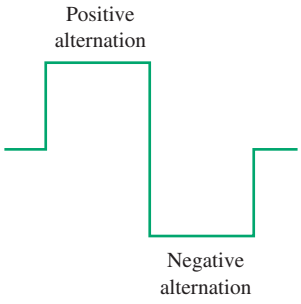


FIGURE 40 Ideal square wave with 50 percent duty cycle.

Figure 41 shows this same square wave stretched out to illustrate a more true representation of it. Notice the sides are not ideally vertical but have a slight slope to them. The edges are rounded off because transition time is required for the low

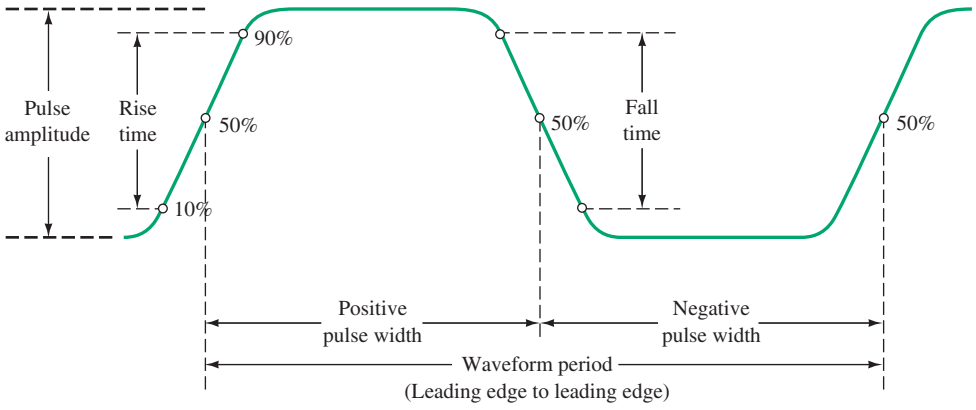


FIGURE 41 Illustration of noise on a pulse.

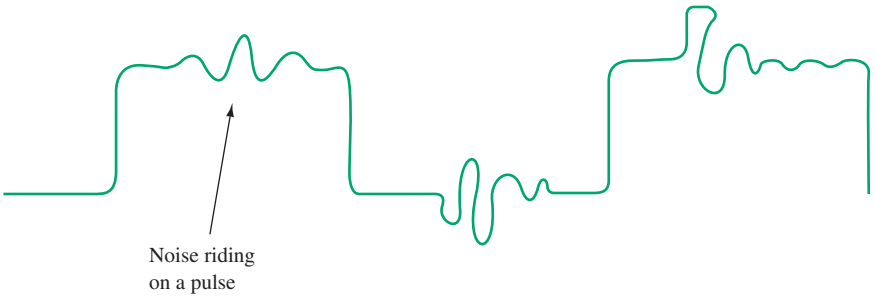


FIGURE 42 Nonideal square wave.

pulse to go high and back to low again. Figure 41 shows the positive alternation as a positive pulse and the negative alternation as a negative pulse. Rise time refers to the pulse's low-to-high transition and is normally measured from the 10 percent point to the 90 percent point on the waveform. Fall time represents the high-to-low transition and is measured from the 90 percent and 10 percent points. From the pulse's maximum low point to its maximum high point is the amplitude measured in volts. By observing the pulse waveform in response to circuit conditions that it may encounter, much can be determined about the circuit.

## Effects of Noise on the Pulse

From previous discussions about noise you learned that noise has an additive effect on a signal. A signal's amplitude is changed by noise adding to it or subtracting from it. This concept is depicted in Figure 42. The positive pulse and the negative pulse have changed from the ideal as a direct result of encountering noise. The noise has changed the true amplitudes of the pulses. If the noise becomes too severe, the positive and negative noise excursions might be mistaken by logic circuits as high and low pulses. Proper noise compensating techniques, shielding, and proper grounds help to reduce noise. If the digital waveforms under test show signs of deterioration due to noise, troubleshoot by checking compensation circuits, shielding, and ensuring that proper grounds are made.

## Effects of Impedance on the Pulse

The square wave pulse can show the effects of impedance mismatches, as seen in Figure 43. The pulse in Figure 43(a) is severely distorted by an impedance that is below that required. For example, if RG-58/AU coaxial cable, carrying data pulses, became shorted or if one of its connectors developed a low-resistance leakage path to ground, then the data pulses would suffer low-impedance distortion. Figure 43(b)

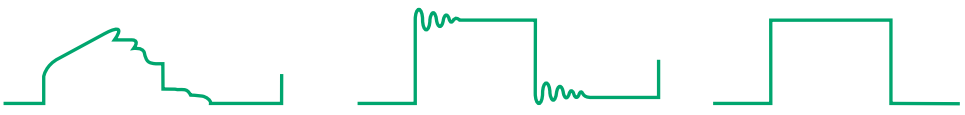


FIGURE 43 Effects of impedance mismatches: (a) impedance is too low; (b) impedance is too high (ringing); (c) impedance is matched.

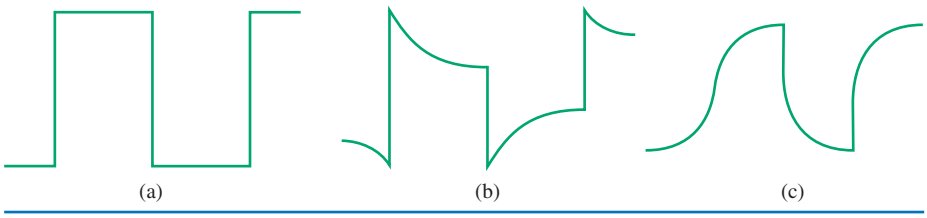


FIGURE 44 Effects of frequency on data pulses: (a) good pulses; (b) low-frequency attenuation; (c) high-frequency attenuation.

shows a type of distortion on the top and bottom of the square wave called ringing. Ringing is the result of the effects of high impedance on the pulse. If a transmission line is improperly terminated or develops a high resistance for some reason, then ringing can occur. A tank circuit with too high of a *Q* will cause ringing. By adjusting the tank's *Q* or by adding proper termination to a transmission line, the waveform can be brought back to normal, as shown in Figure 43(c). When working with data lines, ensure that proper terminations are made. The effect of impedance loading is reduced in communications equipment like transmitters, receivers, and data handling circuits when proper repair and alignment maintenance techniques are used.

## Effects of Frequency on the Pulse

Digital pulses will not be distorted when passing through an amplifier with a sufficient bandwidth or a transmission line with a sufficient bandwidth. Figure 44(a) shows that the pulse does not become distorted in any fashion. The dip at the top and bottom of the waveform in Figure 44(b) represents low-frequency attenuation. The high-frequency harmonic components pass without being distorted, but the low-frequency components are attenuated. Coupling capacitors in communications circuits can cause low-frequency distortion. Low-frequency compensating network malfunctions will also attenuate the low-frequency components of the pulse waveform.

High-frequency distortion occurs when the high-frequency harmonic components of a digital square wave are lost. The edges become rounded off, as seen in Figure 44(c). The high harmonic frequencies are lost when the media bandwidth becomes too narrow to pass the pulse in its entirety. A circuit's bandwidth can change when the value of circuit components such as coils, capacitors, and resistors increases or decreases. Open and shorted capacitors found in tank circuits can also cause high-frequency losses.



## 9 Troubleshooting with Electronics Workbench™ Multisim

Proper sampling of the input signal is an extremely important process when converting an analog signal to a digital format. This Electronics Workbench™ Multisim exercise has been developed to advance your understanding of the sampling process and to reinforce the importance of properly selecting the sample frequency. Examples are provided to demonstrate the properly sampled signal and the components generated by aliasing when the sample frequency is inadequate.

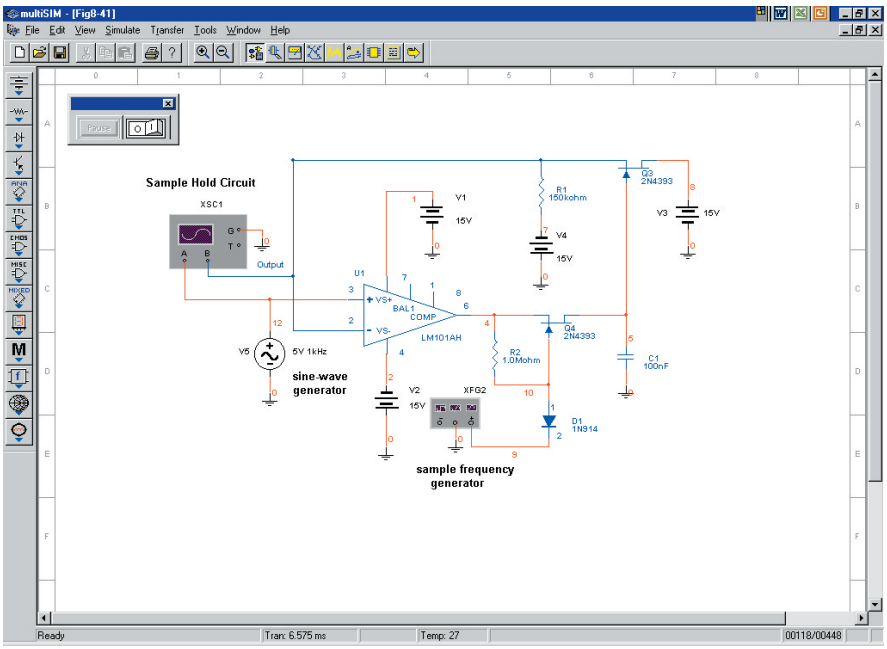


FIGURE 45 A sample-and-hold circuit as implemented in Electronics Workbench™ Multisim.

Start this exercise by opening the file **Fig8-45** found at www.pearsoned.com/electronics. This circuit contains a function generator that supplies the sample frequency ($f_s = 5$ kHz) and a sine-wave generator that provides the analog signal ($f_i = 1$ kHz) being sampled. The Multisim circuit is shown in Figure 45.

Start the simulation and observe the traces on the oscilloscope. Trace A is the input sine wave and trace B is the sampled signal (also called a pulse-amplitude-modulated [PAM] signal). The oscilloscope traces are shown in Figure 46.

Experiment with the sample frequency. Double-click on the function generator and set the sample frequency to 12 kHz. Restart the simulation and notice the improvement in the sampled signal due to the significant increase in the sample frequency. The Nyquist sampling theorem states that the sample frequency ($f_s$) must be at least twice the highest input frequency. What happens if the sample frequency does not satisfy the Nyquist criteria? Open the file **FigE8-1** at www.pearsoned.com/electronics. Notice that a spectrum analyzer has been connected to the output. The sample frequency ($f_s$) has been set to 6 kHz and the input frequency ($f_i$) is 4 kHz. Start the simulation and observe the display of frequencies on the spectrum analyzer. The signal you should see on the spectrum analyzer is shown in Figure 47.

Use the cursor to determine the frequencies displayed. You will see the following: 2 kHz, 4 kHz, 8 kHz, and 10 kHz. Where did these frequencies come from? The sample frequency is 6 kHz. The input frequency is 4 kHz. Therefore, you have the following.

| **Frequency** | **Origination** |
|---|---|
| $(6 - 4)$ kHz $= 2$ kHz | $f_s - f_i$ |
| 4 kHz | Input signal |

| | |
|---|---|
| $(6 + 2)$ kHz $= 8$ kHz | Sum of the sample frequency ($f_s$) and the 2-kHz ($f_s - f_i$) frequency |
| $(6 + 4)$ kHz $= 10$ kHz | Sum of the sample frequency ($f_s$) and the input frequency ($f_i$) |

This example demonstrates the importance of properly selecting the sample frequency. The input signals in communications systems are typically more complex than a simple sine wave and contain many harmonic frequencies. This example underscores the importance of incorporating antialiasing filters in sampling circuits to ensure that

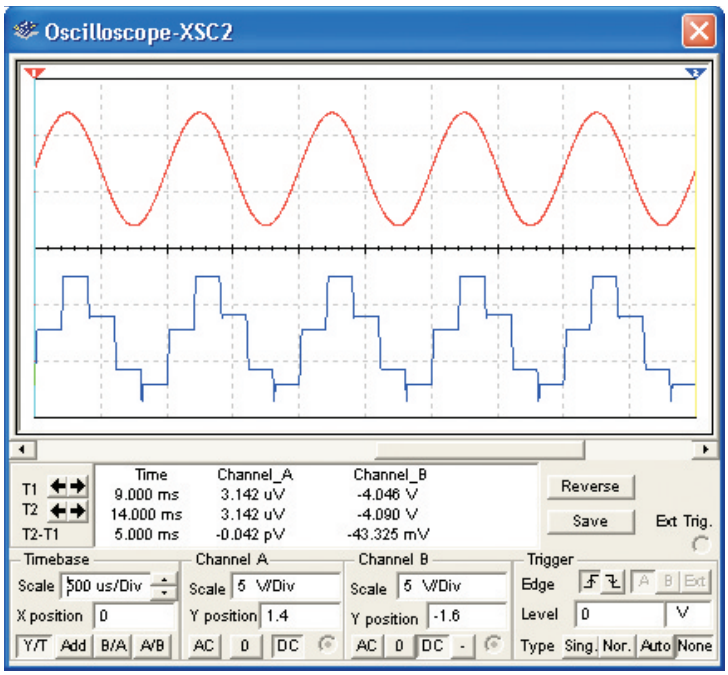


FIGURE 46 The oscilloscope traces for the sample-and-hold circuit.

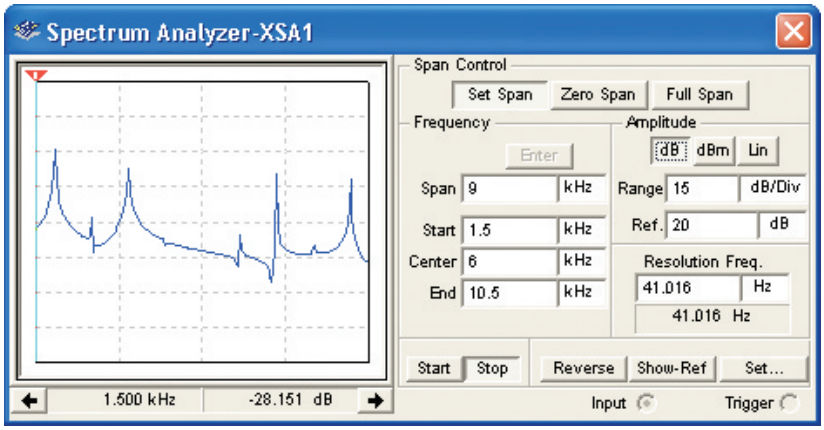


FIGURE 47 The spectrum of a signal that contains aliased frequencies due to improper selection of the sampling frequency.

the maximum input frequency never exceeds $f_s/2$. If the Nyquist criteria is not met, aliasing frequencies will be generated, leading to a decrease in system performance.

One of the Electronics Workbench™ exercises that follows further investigates the sample-and-hold circuit and provides you with the opportunity to examine the spectral content of a signal generated by a sample-and-hold circuit. Additionally, two of the exercises have faults incorporated in the circuit and provide you with the opportunity to troubleshoot the circuit.

## Electronics Workbench™ Exercises

1. Open the file **FigE8-2** at www.pearsoned.com/electronics. Use the spectrum analyzer to determine the frequencies generated in the sampled signal. The input frequency is 5 kHz. Where did the 3-kHz signal come from?
2. Open the file **FigE8-3** at www.pearsoned.com/electronics. This circuit contains a fault. Start the simulation and use the oscilloscope to isolate the fault. When you discover the fault, double-click on the component, click on the **fault** tab, and set the faults to none. Restart the simulation and see if you have repaired the circuit. Specifiy what component(s) you repaired.
3. Open the file **FigE8-4** at www.pearsoned.com/electronics. This circuit contains a fault. Start the simulation and use the oscilloscope to isolate the fault. When you discover the fault, double-click on the component, click on the **fault** tab, and set the faults to none. Restart the simulation and see if you have repaired the circuit. Specifiy what component(s) you repaired.



## Summary

In this chapter we studied the coding techniques commonly used in digital communications. The techniques behind pulse-code modulation were explored, as were digital signal encoding formats, coding principles, and error correction and detection. The major topics you should now understand include:

- the definition of the Nyquist sampling frequency
- aliasing and foldover distortion
- the definition of the dynamic range of a sampled signal
- identification of the major digital encoding formats including the NRZ, RZ, phase-encoded, and multilevel binary formats
- the concept of Hamming distance
- the explanation of the various codes' error detection and correction methods, including parity, cyclic redundancy check (CRC) codes, Hamming code, and Reed–Solomon codes



## Questions and Problems

### Section 1

1. With the assistance of Figure 1, describe a transmission that is
   (a) Digital but not data.

(b) Both digital and data.
(c) Data but not digital.

2. Define *digital signal processing*. Provide an example that is not described in this book.

## Section 2

3. What do the abbreviations ASCII and EBCDIC stand for?
4. Provide the ASCII code for 5, a, A, and STX.
5. Provide the EBCDIC code for 5, a, A, and STX.
6. Describe the Gray code.
7. Provide an application of the Gray code.

## Section 3

8. Define *acquisition time* for a sample-and-hold circuit.
9. Define *aperture time* for a sample-and-hold circuit.
10. What is the typical capacitance value for a sample-and-hold circuit?
11. Draw the PAM signal for a sinusoid using
    (a) Natural sampling.
    (b) Flat-top sampling.
12. An audio signal is band-limited to 15 kHz. What is the minimum sample frequency if this signal is to be digitized?
13. A sample circuit behaves like what other circuit used in radio-frequency communications?
14. What is the dynamic range (in dB) for a 12-bit PCM system?
15. Define the resolution of a PCM system. Provide two ways that resolution can be improved.
16. Calculate the number of bits required to satisfy a dynamic range of 48 dB.
17. What is meant by quantization?
18. Explain the difference in linear PCM and nonlinear PCM.
19. Explain the process of companding and the benefit it provides.
20. A $\mu$-law companding system with $\mu = 100$ is used to compand a 0- to 10-V signal. Calculate the system output for inputs of 0, 0.1, 1, 2.5, 5, 7.5, and 10 V. (0, 1.5, 5.2, 7.06, 8.52, 9.38, 10)

## Section 4

21. Describe the characteristics of the four basic encoding groups: NRZ, RZ, phase-encode binary, and multilevel binary.
22. Sketch the data waveforms for 1 1 0 1 0 using NRZ-L, biphase M, differential Manchester, and dicode RZ.
23. What are the differences between bipolar codes and unipolar codes?
24. Which coding format is considered to be self-clocking? Explain the process.

## Section 5

25. What is $D_{min}$?
26. How can the minimum distance between two data values be increased?



27. Determine the number of errors that can be detected and corrected for data values with a Hamming distance of
    (a) 2.
    (b) 5.
28. Determine the distance between the following two digital values:

    1 1 0 0 0 1 0 1 0
    0 1 0 0 0 0 0 1 0

29. What is the minimum distance between data words if
    (a) Five errors are to be detected?
    (b) Eight errors are to be detected?

## Section 6

30. CRC codes are commonly used in what computer networking protocol?
31. Provide a definition of systematic codes.
32. With regard to $(n, k)$ cyclic codes, define $n$ and $k$.
33. What is a block check code?
34. How are the feedback paths determined in a CRC code-generating circuit?
35. Draw the CRC generating circuit if $G(x) = x^4 + x^2 + x + 1$.
36. Given that the message value is 1 0 1 0 0 1 and $G(x) = 1\ 1\ 0\ 1$, perform modulo-2 division to determine the block check code (BCC). (111)
37. What is a syndrome?
38. What does it mean if the syndrome value is
    (a) All zeros?
    (b) Not equal to zero?
39. What does it mean for a code to be forward error-correcting?
40. What popular commercial application uses Reed–Solomon coding and why?

## Section 7

41. What is the type of difference equation that makes use of past output values?
42. What is the type of difference equation that makes use of only the present and past input values?
43. What is the order of a difference equation that requires four past input and output values?
44. What is the order of the following difference equation? Is this a recursive or a nonrecursive algorithm?

    $$y_0 = x_0 - x_{(1)}$$

45. Given the following difference equations, state the order of the filter and identify the values of the coefficients.
    (a) $y = 0.9408\ x_0 - 0.5827\ x_1 + 0.9408\ x_2 + 0.5827\ y_1 - 0.8817\ y_2$
    (b) $y_0 = 0.02008\ x_0 - 0.04016\ x_2 + 0.02008\ x_4 + 2.5495\ y_1 - 3.2021\ y_2 + 2.0359\ y_3 - 0.64137\ y_4$

## Questions for Critical Thinking

46. Explain why a technique such as CRC coding is used. Can you achieve the same results using parity checking?

47. A PCM system requires 72 dB of dynamic range. The input frequency is 10 kHz. Determine the number of sample bits required to meet the dynamic range requirement and specify the minimum sample frequency to satisfy the Nyquist sampling frequency. (12 bits, 20 kHz)
48. The voltage range being input to a PCM system is 0 to 1 V. A 3-bit A/D converter is used to convert the analog signal to digital values. How many quantization levels are provided? What is the resolution of each level? What is the value of the quantization error for this system? (8, 0.125, 0.0625)



*This page intentionally left blank*

# WIRED DIGITAL COMMUNICATIONS

From *Modern Electronic Communication*, Ninth Edition, Jeffrey S. Beasley, Gary M. Miller. Copyright © 2008 by Pearson Education, Inc. Published by Prentice Hall. All rights reserved.

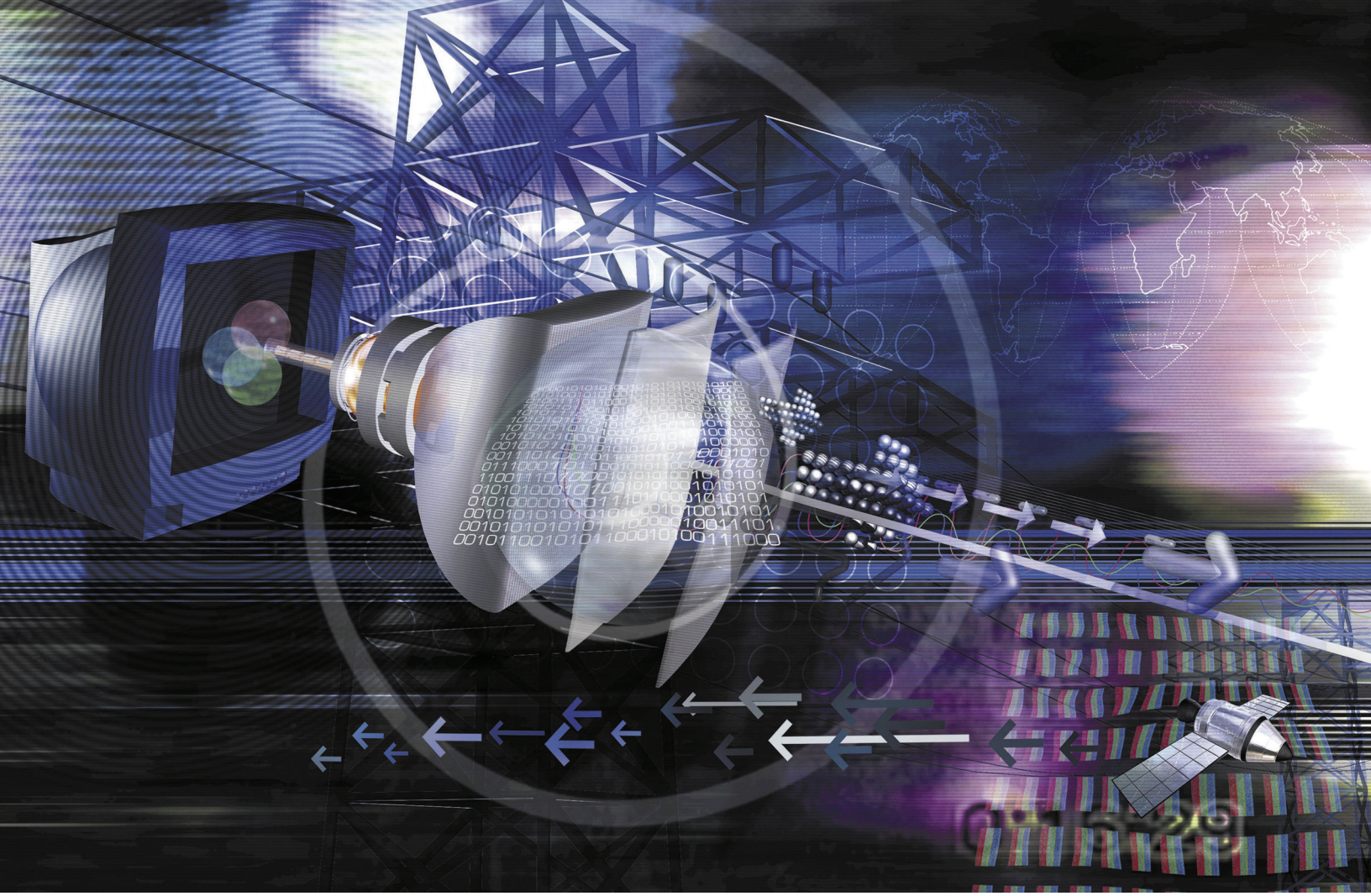

## Chapter Outline

1 Introduction
2 Background Material for Digital Communications
3 Bandwidth Considerations
4 Data Transmission
5 Time-Division Multiple Access (TDMA)
6 Delta and Pulse Modulation
7 Computer Communication
8 Troubleshooting
9 Troubleshooting with Electronics Workbench™ Multisim

## Objectives

- Describe six combinations for transmitting analog or digital signals using either an analog or digital channel
- Explain the concepts of error probability and bit error rate
- Describe the basics of digital links and protocols
- Detail the bandwidth issues of a digital communications link
- Describe the fundamentals of TDMA and how it is used to transport digital data
- Describe the delta and pulse modulation techniques
- Explain the fundamentals of data transmission, including T1, T3, packet switching, frame relay, and ATM
- Describe the current computer serial communication standards, facsimile, and computer bus standards

# WIRED DIGITAL COMMUNICATIONS

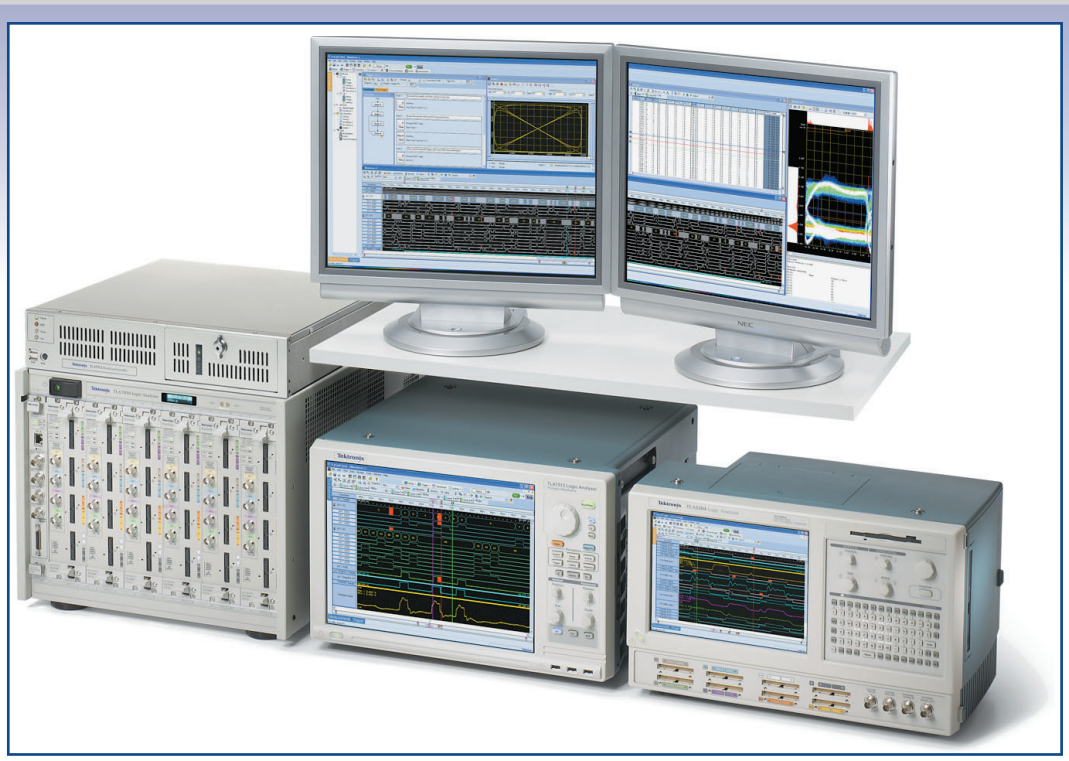

An assortment of Tektronix Logic Analyzers. (Courtesy of Tektronix, Inc.)

## Key Terms

wired digital communications
baseband
coding
mark, space
dit
error probability ($P_e$)
bit error rate (BER)
Energy per bit ($E_b$), or bit energy
$E_b/N_o$
synchronous
asynchronous
handshaking
protocols
framing
line control
multipoint circuits
flow control
sequence control
character insertion
character stuffing
bit stuffing
transparency
bps
baud rate
fractional T1
point of presence
CSU/DSU
D4 framing
ESF
loopback
AMI
bipolar coding
B8ZS
minimum ones density
bipolar violation
HDLC
PPP
data encapsulation
packets
statistical concentration
frame relay
public data network
Telco
X.25
committed information rate
bursty
committed burst information rate (CBIR)
ATM
packet switching
payload
virtual path connection (VPC)
virtual channel connection (VCC)
SVC
VPI
VCI
time-division multiple access (TDMA)
time slot
demultiplexer (DMUX)
guard times
intersymbol interference (ISI)
delta modulation
slope modulation
tracking ADC
slope overload
continuously variable slope delta
pulse modulation
time-division multiplexing
Nyquist rate
pulse-amplitude modulation
pulse-width modulation
pulse-position modulation
pulse-time modulation
pulse-duration modulation
pulse-length modulation
continuous wave
interrupted continuous wave
asynchronous system
start bit, stop bit
synchronous system
universal serial bus (USB)
hot-swappable
Type A connector
Type B connector
Firewire (IEEE 1394)
RS-232
null modem
data terminal equipment
data communications equipment
RS-422, RS-485
balanced mode
facsimile
fax

## 1 INTRODUCTION

**Wired Digital Communications**
digital communications over a wired connection

In this chapter, we consider the important aspects of the transmission of signals as they relate to digital communications. The chapter focuses on digital communications over a wired link, which is called **wired digital communications.** Before we continue, it would be helpful to consider different transmission schemes for digital and analog signals. This will provide a perspective on the various methods presented in this chapter and help you to compare them with some other transmission systems.

Six possible methods for transmitting information are provided in Figure 1. In Figure 1(a) the analog signal is transmitted directly. An example of this is a basic intercom system where a microphone creates an electrical analog of your voice, which is transmitted directly via a pair of wires. Of course, that signal is usually amplified at both the input and output sides of the channel (pair of wires). Notice that the channel is labeled an *analog baseband channel* in Figure 1(a). **Baseband** means the signal is transmitted at its base frequencies, and no modulation to another frequency range has occurred. Figure 1(b) shows a standard analog modulation scheme.

***Baseband**
the signal is transmitted at its base frequency with no modulation to another frequency range

When a computer transmits digital data to another computer or a computer peripheral such as a printer, it may transmit that signal directly. This situation is illustrated in Figure 1(c). Notice that a coder and decoder are shown in this system. We'll consider these types of communications in Section 7.

The transmission of digital signals via an analog channel is shown in Figure 1(d). A modem allows the digital signal to be transmitted on an analog channel. This is the scheme used by most personal computers to transmit their information over telephone lines.

You may wonder, why go to the complexities shown in Figures 1(e) and (f) just to transmit an analog signal? In Figure 1(e) the signal is converted to digital form by the analog-to-digital converter and transmitted as digital pulses on the digital channel. In Figure 1(f) the same processing occurs, only this channel cannot carry the digital pulses, so the modem is used to allow an analog channel to carry digital data. As you will see, the digitization of analog signals offers advantages when multiplexing more than one signal in a transmission. There can also be advantages when noise is a significant problem.

## 2 BACKGROUND MATERIAL FOR DIGITAL COMMUNICATIONS

This section introduces some of the basic digital communications concepts needed to understand and appreciate fully the material presented in this chapter. The basic principles of binary coding are first reviewed, followed by a discussion on code noise immunity. The concept of bit-error rate (BER) and the probability of a bit error ($P_e$) are presented next. The section concludes with definitions for the fundamental communication concepts of simplex, half-duplex, full duplex, synchronous, and asynchronous data communications.

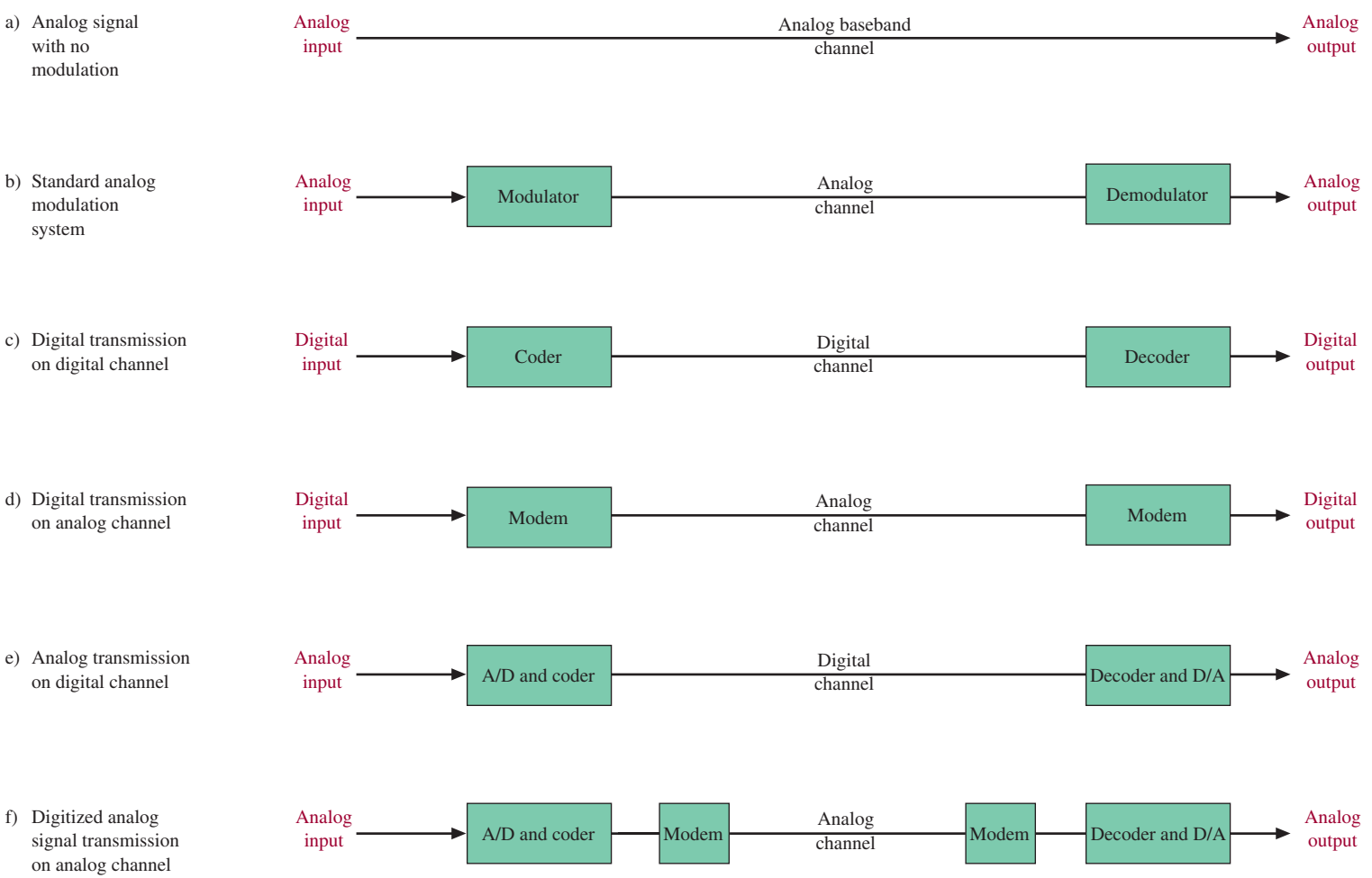


FIGURE 1 Transmission schemes for analog and digital signals.

## Binary Coding

Some of the earliest forms of electrical communications used coding to send messages rather than direct transmission of *voice.* The telegraph demonstration by Samuel Morse in 1843 is an example. It is ironic that digital communications (as telegraphy is) now promise to help ease the problems of overcrowded voice transmission facilities. The future will certainly bring more and more coded speech, transmitted in digital format because of the following advantages:

1. less sensitive to noise,
2. less crosstalk (cochannel interference),
3. lower distortion levels,
4. faded signals more easily recreated, and
5. greater transmission efficiency.

What at first seemed a barrier to digital transmission—that is, the need to encode (convert) an analog signal into digital form—is proving to be an advantage. Coding now allows speech to be compressed to its minimum essential content and therefore permits the greatest possible efficiency in transmission.

**Coding**
transforming messages or signals in accordance with a definite set of rules

**Coding** may be defined as the process of transforming messages or signals in accordance with a definite set of rules. Many different codes are available for use, but one thing they share universally is the use of two levels. We can then refer to this as a binary system. In such a system, the next signal will either be *high* or *low* and should have an equal (50:50) chance of being one or the other. A *bit* is a unit of information required to allow proper selection of one out of two equally probable events. For example, assuming that heads or tails when flipping a coin are equally probable, let a high condition represent heads and a low condition represent tails. You must have 1 bit of information to predict the result of the coin toss. If that 1 bit of information is a high condition (usually termed the 1 level), then you can correctly predict that heads came up.

**Mark, Space**
analog signal representations of digital high or low states, respectively; usually sine waves of specific frequencies

The high and low conditions are referred to as 1 and 0, or **mark** and **space,** respectively. With respect to an electrical signal used to represent these conditions, the relationship is shown in Figure 2. In this figure, 7 bits of information are

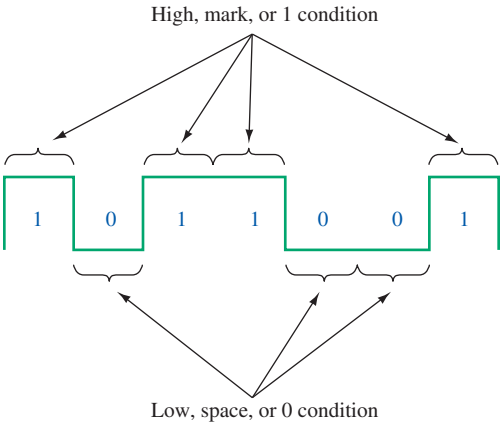


FIGURE 2 Binary information.

provided with the following sequence: 1 0 1 1 0 0 1. With 7 bits available, it is possible to select the correct result out of 128 equiprobable events because the 7 bits can be arranged in 128 different configurations, and each one may be allowed to represent 1 of 128 equiprobable events in a code. Because 2 raised to the seventh power equals 128, we can infer the following relationship:

$$n = \log_2 M \tag{1}$$

where $n$ is the number of bits of information required to predict one out of $M$ equiprobable events and by the logarithm definition, $2^n = M$.

If it were required to use a binary code to represent the 26 letters in the alphabet, Equation (1) shows that

$$n = \log_2 26 = 4.7$$

Because the number of bits required must always be an integer, 5 bits are necessary. Because 5 bits means that a choice out of 32 different events ($2^5 = 32$) is possible, not all the capability of a 5-bit system is utilized. The coding efficiency is given as

$$\mu = \frac{\text{\# bits required}}{\text{\# bits used}} \tag{2}$$

Thus,

$$\mu = \frac{4.7}{5} \times 100\% = 94\%$$

It is not absolutely necessary to use a binary system for coding, but it is easy to show why it is used almost exclusively. A decimal system or 10 different levels is sometimes utilized. In it, the **dit** (decimal digit) is the basic unit of information. If it were used to represent our alphabet, the number of required dits would be $\log_{10} 26 = 1.415$ dits. Thus, 2 dits would be required to represent the 26 different letters, which means the efficiency of the decimal system in this case would be

**Dit**
decimal digit

$$\mu = \frac{1.415}{2} \times 100\% = 71\%$$

It is a fact that binary coding is more efficient than other coding except in isolated instances. It is also simpler to implement than other coding schemes.

## Example 1

*Determine the number of bits required for a binary code to represent 110 different possibilities, and compare its efficiency with a decimal system to accomplish the same goal.*

### Solution

In a binary system,

$$n = \log_2 M = \log_2 110 = 6.78 \tag{1}$$

Solution of the equation above can be accomplished by taking the log of 110 divided by the log of 2.

$$\frac{\log_{10} 110}{\log_{10} 2} = 6.78$$

and therefore $2^{6.78} = 110$.
Thus, 7 bits are required, and the efficiency is

$$\mu = \frac{6.78}{7} \times 100\% = 97\% \quad \textbf{(2)}$$

In a decimal system, the number of dits required is $\log_{10} 110 = 2.04$, or a total of 3 dits. The efficiency is

$$\mu = \frac{2.04}{3} \times 100\% = 68\% \quad \textbf{(2)}$$

## Code Noise Immunity

We have seen that binary coding systems are generally more efficient than other systems. Perhaps an even greater advantage is their superior noise immunity. Consider a binary system where 0 V represents 0 and 9 V represents 1. In such a system, it would take a noise level of roughly 5 V or more to cause an error in output intelligibility. In a decimally coded system of the same total output power, 0 is represented by 0 V, 1 by 1 V, 2 by 2 V, et cetera, up to 9 by 9 V. Thus, the 10 discrete levels are 1 V apart, and a 0.5-V noise level can impair intelligibility. If the output levels in this decimal system were 0, 10 V, 20 V, . . . , 90 V, then the 9-V binary and 90-V decimal system would have comparable noise immunities. Because power is proportional to the square of voltage, the decimal system requires $10^2$ or 100 times the power of the binary system to offer the same noise immunity. By now in your study of communications, you may have come to the correct conclusion that noise is the single most important consideration. The reasoning just concluded regarding efficiency and noise immunity is an elementary example of the work of an information theory specialist. *Information theory* is the branch of learning concerned with optimization of transmitted information.

**Error Probability ($P_e$)**
in a digital system, the number of errors per total number of bits received

Errors occur as a result of noise. There are many sources of noise. The **error probability** ($P_e$) in a digital system is the number of errors per total number of bits received. For instance, if 1 error bit per 100,000 bits occurs, the error probability expressed as $P_e$ is 1/100,000, or $10^{-5}$. The acceptable error probability in communications systems ranges from about $10^{-5}$ up to $10^{-12}$ in more demanding applications. The average number of errors in a transmission $m$ bits long can be calculated as

$$\text{average number of errors} = m \times \text{error probability } (P_e) \quad \textbf{(3)}$$

**Bit Error Rate (BER)**
the number of bit errors that occur for a given number of bits transmitted

The most common method of referring to the quality of a digital communications systems is its **bit error rate (BER).** The BER is the number of bit errors that occur for a given number of bits transmitted. The bit error rate is related to the error probability, $P_e$, because it is the ratio of bit errors to bits transmitted.

### Example 2

*A digital transmission has an error probability, $P_e$, of $10^{-6}$, and $10^7$ bits are received. Calculate the expected number of errors.*

**Solution**

$$\begin{aligned}\text{average number of errors} &= m \times \text{error probability } (P_e) \\ &= 10^7 \times 10^{-6} \\ &= 10\end{aligned} \tag{3}$$

or 10 expected bit errors if 10 million bits are received.

## Energy per Bit

The **energy per bit** ($E_b$)**,** or **bit energy,** is the amount of power in a digital bit for a given amount of time. The equation for calculating the bit energy is provided in Equation (4).

**Energy Per Bit ($E_b$), or Bit Energy**
amount of power in a digital bit for a given amount of time for that bit

$$E_b = P_t \cdot T_b \tag{4}$$

where $E_b$ = energy per bit (in joules/bit)
$P_t$ = total carrier power (watts)
$T_b$ = 1/(bit frequency)

### Example 3

*The transmit power for a cellular phone is 0.8 W. The phone is transferring digital data at a rate of 9600 bps. Determine the energy per bit, $E_b$, for the data transmission.*

**Solution**

$$\text{bit frequency} = 1/9600 = 1.042 \times 10^{-4}$$

$$E_b = P_t \cdot T_b = 0.8 \cdot 1.042 \times 10^{-4} = 8.336\ 10^{-5}\ \text{J} \quad (\text{or } 83.36\ \mu\text{J}) \tag{4}$$

The value for the bit energy ($E_b$) is typically provided as a relative measure to the total system noise ($N_o$). The electronics in a communications system generate noise and that the primary noise contribution is thermal noise. The relationship for the bit-energy-to-noise value is stated as $\boldsymbol{E_b/N_o}$. In digital communication systems, the probability of a bit error ($P_e$) is a function of two factors, the bit-energy-to-noise ratio ($E_b/N_o$) and the method used to modulate the data digitally. Basically, if the bit energy increases (within operational limits), then the probability of a bit error, $P_e$, decreases, and if the bit energy is low, then the probability of a bit error will be high.

**$E_b/N_o$**
the bit-energy-to-noise ratio

## Communication Links and Protocols

Transmission of information in a communications link is defined by three basic protocol techniques: simplex, half-duplex, and full duplex. An example of simplex operation is a radio station transmitter. The ratio station is sending transmissions to you, but there is typically not a return communications link. Most handitalkies operate in the half-duplex mode. When one unit is transmitting, the other unit must be in the receive mode. A cellular telephone is an example of a communications link that is operating full duplex. In full-duplex mode, the units can be transmitting and receiving at the same time. The following terms apply to both analog and digital communications links.

| | |
|---|---|
| Simplex | Communication is in one direction only. |
| Half-duplex | Communication is in both directions but only one can talk at a time. |
| Full-duplex | Both parties can talk at the same time. |

**Synchronous**
this mode of operation implies that the transmit and receiver data clocks are locked together

**Asynchronous**
this mode of operation implies that the transmit and receiver data clocks are not locked together and the data must provide start and stop information to lock the systems together temporarily

The communications link can also be classified according to whether it is a **synchronous** or an **asynchronous** channel. Synchronous operation implies that the transmit and receive data clocks are locked together. In many communications systems, this requires that the data contain clocking information (called *self-clocking data*). For example, biphase codes contain clocking information. The other option for transmitting data is to operate asynchronously, which means that the clocks on the transmitter and receiver are not locked together. That is, the data do not contain clocking information and typically contain start and stop bits to lock the systems together temporarily. NRZ-L is an example of a data format that requires the use of start and stop bits to lock the systems temporarily.

## Protocols

The vast number of digital data facilities now in existence require complex networks to allow equipment to "talk" to one another. To maintain order during the interchange of data, rules to control the process are necessary. Initially, procedures allowing orderly interchange between a central computer and remote sites were needed. These rules and procedures were called **handshaking.** As the complexity of data communications systems increased, the need grew for something more than a "handshake." Thus, sets of rules and regulations called **protocols** were developed. A protocol may be defined as a set of rules designed to force the devices sharing a channel to observe orderly communications procedures.

**Handshaking**
procedures allowing for orderly exchange of information between a central computer and remote sites

**Protocols**
set of rules to make devices sharing a channel observe orderly communication procedures

**Framing**
separation of blocks into information and control sections

Protocols have four major functions:

1. *Framing:* Data are normally transmitted in blocks. The **framing** function deals with the separation of blocks into the information (text) and control sections. A maximum block size is dictated by the protocol. Each block will normally contain control information such as an *address field* to indicate the intended recipient(s) of the data and the block check character (BCC) for error detection. The protocol also prescribes the process for error correction when one is detected.

2. *Line control:* **Line control** is the procedure used to decide which device has permission to transmit at any given time. In a simple full-duplex system with just two devices, line control is obviously not necessary. However, systems with three or more devices **(multipoint circuits)** require line control.
3. *Flow control:* Often there is a limit on the rate at which a receiving device can accept data. A computer printer is a prime example of this condition. **Flow control** is the protocol process used to monitor and control these rates.
4. *Sequence control:* This is necessary for complex systems where a message must pass through numerous links before it reaches its final destination. **Sequence control** keeps message blocks from being lost or duplicated and ensures that they are received in the proper sequence. This has become an especially important consideration in packet-switching systems. They are introduced later in this chapter.

**Line Control**
procedure that decides which device has permission to transmit at a given time

**Multipoint Circuits**
systems with three or more devices

**Flow Control**
protocol used to monitor and control rates at which receiving devices receive data

**Sequence Control**
keeps message blocks from being lost or duplicated and ensures that they are received in the proper sequence

Protocols are responsible for integration of control characters within the data stream. Control characters are indicated by specific bit patterns that can also occur in the data stream. To circumvent this problem, the protocol can use a process termed **character insertion,** also called **character stuffing** or **bit stuffing.** If a control character sequence is detected in the data, the protocol causes an insertion of a bit or character that allows the receiving device to view the preceding sequence as valid data. This method of control character recognition is called **transparency.**

**Character Insertion**
insertion of a bit or character so that a data stream is not mistaken for a control character

**Character Stuffing**
another name for character insertion

**Bit Stuffing**
another name for character insertion

**Transparency**
control character recognition by using the character insertion process

Protocols are classified according to their framing technique. Character-oriented protocols (COPs) use specific binary characters to separate segments of the transmitted information frame. These protocols are slow and bandwidth-inefficient and are seldom used anymore. Bit-oriented protocols (BOPs) use frames made up of well-defined fields between 8-bit start and stop flags. A flag is fixed in both length and pattern. The BOPs include high-level data link control (HDLC) and synchronous data link control (SDLC). Synchronous data link control is considered a subset of HDLC. The byte-count protocol used in Digital Equipment Corporation's digital data communications message protocol (DDCMP) uses a header followed by a count of the characters that will follow. They all have similar frame structures and are therefore independent of codes, line configurations, and peripheral devices. There are many protocol variations.

To illustrate the use of BOPs, we will discuss synchronous data link communication (SDLC). It was developed by IBM. Data link control information is transferred on a bit-by-bit basis. Figure 3 illustrates the SDLC BOP format.

The start and stop flag for the SDLC frame is 01111110 ($7E_H$). The SDLC protocol requires that there be six consecutive ones (1s) within the flag. The transmitter will insert a zero after any five consecutive ones. The receiver must remove the zero when it detects five consecutive 1s followed by a zero. The communication equipment synchronizes on the flag pattern.

| Start flag | Address | Control | Message | Frame check sequence | Stop flag |
|---|---|---|---|---|---|
| 8 bits | 8 bits | 8 bits | Multiples of 8 bits | 8 bits | 8 bits |

FIGURE 3 Bit-oriented protocol format, SDLC frame format.



## 3 Bandwidth Considerations

This section begins with a discussion on the capacity limits of a digital system, then we study the bandwidth considerations of the digital pulse stream. The system capacity and bit rate for a digital system are not unlimited. The relationship for bit rate to channel bandwidth is defined by the Shannon–Hartley theorem. The theorem relates the capacity of a channel when its bandwidth and noise are known.

$$C = \text{BW} \log_2(1 + S/N) \tag{5}$$

where $C$ = channel capacity (bps)
BW = bandwidth of the system
$S/N$ = signal-to-noise ratio

An example using Equation (5) is provided in Example 4.

**Example 4**

*Calculate the capacity of a telephone channel that has an S/N of 1023 (60 dB).*

**Solution**

The telephone channel has a bandwidth of about 3 kHz. Thus,

$$\begin{aligned} C &= \text{BW} \log_2(1 + S/N) \qquad (5) \\ &= 3 \times 10^3 \log_2(1 + 1023) \\ &= 3 \times 10^3 \log_2(1024) \\ &= 3 \times 10^3 \times 10 \\ &= 30{,}000 \text{ bits per second} \end{aligned}$$

Example 4 shows that a telephone channel could theoretically handle 30,000 b/s if an S/N power ratio of 1023 (60 dB) exists on the line. The Shannon–Hartley theorem represents a fundamental limitation. The only consequence of exceeding it is a very high bit error rate. Generally, an acceptable bit error rate (BER) of $10^{-5}$ or better requires significant reductions from the Shannon–Hartley theorem prediction.

### Bandwidth Considerations

**bps**
bits per second

**Baud Rate**
a measure of the symbols per second

Bandwidth considerations for digital systems are much like those of an analog system. Technical specifications such as the frequency response, available frequency spectrum, etc., are still of great importance. The available bandwidth dictates the amount of data that can be transmitted over time (i.e., bits per second, **bps**) and the bandwidth (in hertz) influences the choice of the digital modulation techniques. For clarification purposes, bit rate and **baud rate** are two different terms. Bit rate is measured in bits per second, but baud rate is a measure of symbols per second. For binary (two-level) data transmission, however, the bit rate and the baud rate are the same.

The first consideration for digital data transmission is that the bandwidth of our transmission system will not be infinite and therefore the transmitted pulse will

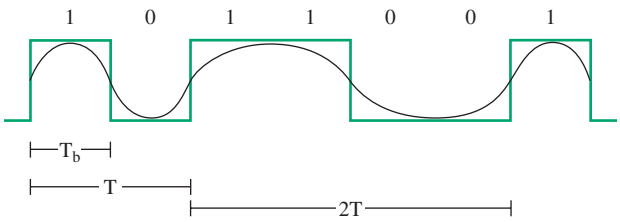


FIGURE 4 A digital pulse stream of frequency $1/T$ and a pulse width of $T_b$.

not be a perfect rectangle. The square wave is made up of a summation of sinusoids of harmonically related frequencies. It is important to note that the bandwidth requirements for a digital data stream depend on the encoding method used to transmit the data. Figure 4 shows the pulses in an NRZ-L-encoded digital data stream.

If an NRZ-L code is being used, the highest bit frequency requirement rate will be for an alternating 0 1 pattern. Note that the sinusoid component for the 1 1 0 0 sequence has a period twice that of the 1 0 pattern. Therefore, the 1 1 0 0 sequence will not be a limiting factor for the minimum bandwidth. The minimum bandwidth, $BW_{min}$, is determined by the sinusoidal component contained in the data stream with the shortest period of $T$ (in seconds), which is the alternating 1 0 pattern. The equation for calculating the minimum bandwidth is

$$BW_{min} = \frac{1}{2T_b} = \frac{1}{T} \quad [\text{Hz}] \tag{6}$$

**Example 5**

*An 8-kbps NRZ-L encoded data stream is used in a digital communication link. Determine the minimum bandwidth required for the communications link.*

**Solution**

Using Equation (6), the minimum bandwidth is

$$T_b = \frac{1}{8 \text{ kbps}} = 125\ \mu\text{s}$$

$$BW_{min} = \frac{1}{2\,T_b} = \frac{1}{2 \cdot 125\ \mu\text{s}} = 4 \text{ kHz} \tag{6}$$



## 4 Data Transmission

This section introduces the basic concepts of high-speed serial data transmission. Topics in this section include an introduction to the data standards currently being used in data communications and the data formats being used. These data standards

include T1 to T3, DS-1 to DS-3, and E1, E3. An overview of packet switching, frame relay, and the asynchronous transfer protocol (ATM) and SDLC/HDLC are also presented.

## Data Channels

The common communication data rates (for end users) are T1 to T3 and DS-1 to DS-3. T1/DS-1 and T3/DS-3 are actually the same data rates. Data for the T-level carriers are listed in Table 1.

**Table 1** Data Rates for the T and DS Carriers

| Designation | Data Rate |
|---|---|
| T1 (DS-1) | 1.544 Mbps |
| T2 (DS-2) | 6.312 Mbps |
| T3 (DS-3) | 44.736 Mbps |
| T4 (DS-4) | 274.176 Mbps |

The T1 line is capable of carrying 24 time-division-multiplexed telephone calls. Each phone call requires 64 kbps.

$$8 \text{ bits/sample} \times 8000 \text{ samples/second} = 64{,}000 \text{ bits per second} \quad (64 \text{ kbps})$$

Framing bits are added to the multiplexed voice data at a rate of 8 kbps to maintain data flow. This brings the total data rate for a T1 channel to:

$$\begin{array}{rr} 24 \text{ channels} \times 64 \text{ kbps/channel} = & 1.536 \text{ Mbps} \\ + \qquad \text{framing bits} = & 8 \text{ kbps} \\ \hline \text{total bit rate} = & 1.544 \text{ Mbps} \end{array}$$

T1 data lines are not restricted to carrying voice data. The data lines can be leased from a communications carrier for carrying any type of data, including voice, data, and video. It is important to note that when you lease a T1 line for providing a data connection from point A to point B, the communications carrier does not provide you with your own private physical connection. What this means is the communication carrier is providing you with sufficient bandwidth in their system to carry your T1 (1.544-Mbps) data rate. Your data will most likely be multiplexed with hundreds or even thousands of other T1 data channels.

**Fractional T1**
a term used to indicate that only a portion of the data bandwidth of a T1 line is being used

A data facility may need only a portion of the data capability of the T1 bandwidth. **Fractional T1** (FT1) is the term used to indicate that only a portion of the T1 bandwidth is being used. Fractional T1 data rates up to 772 kbps are available. The most common fractional T1 data rate is 56 kbps. This used to be called a DS-0 line. The 56-kbps lines are provided as 24-hour dedicated leased lines or through a dial-up connection called switch-56. The user then pays for the data bandwidth only when it is needed.

Two other designations for data rates are E1 and E3. These designations are used throughout the world where the T-carrier designation is not used. For example, the E1, E3 designations are primarily used in Europe. The data rates for E1 and E3 are listed in Table 2.

**Table 2** E1 and E3 Data-Transmission Rates

| Designation | Date Rate |
|---|---|
| E1 | 2.028 Mbps |
| E3 | 34.368 Mbps |

## Point of Presence

The point where the communication carrier brings in service to a facility is called the **point of presence.** This is the point where users connect their data to the communications carrier. The link to the communications carrier can be copper, fiber, digital microwave, or digital satellite. The communications carriers will also require that data be connected through a **CSU/DSU** (channel service unit/data service unit). The CSU/DSU provides the data interface to the communications carrier, which includes adding the framing information for maintaining the data flow, storing performance data, and providing management of the line. An example of inserting the CSU/DSU in the connection to the Telco cloud is shown in Figure 5. The CSU/DSU also has three alarm modes for advising the user about problems on the link. The alarms are red, yellow, and blue. The conditions for each alarm are defined in Table 3.

**Point of Presence**
the point where users connect their data to the communications carrier

**CSU/DSU**
channel service unit/data service unit, which provides the data interface to the communications carrier doing framing and line management




FIGURE 5 Insertion of the CSU/DSU in the connection to the Telco cloud.

**Table 3** The CSU/DSU Alarms

| | |
|---|---|
| **Red alarm** | A local equipment alarm that indicates that the incoming signal has been corrupted. |
| **Yellow alarm** | Indicates that a failure in the link has been detected. |
| **Blue alarm** | Indicates a total loss of incoming signal. |

## T1 Framing

The original framing for the data in T1 circuits is based on **D4 framing.** The D4 frame consists of 24 voice channel (8 kbps) × 8 bits/channel plus one framing bit, for a total of 193 bits. The D4 system uses a 12-bit framing sequence of

**D4 Framing**
the original data framing used in T1 circuits

1 0 0 0 1 1 0 1 1 1 0 0

to maintain synchronization of the receiving equipment. The D4 12-bit framing sequence is generated from 12 D4 frames.

**ESF**
extended superframe framing

Extended superframe framing **(ESF)** is an improvement in data performance over D4 framing. ESF extends the frame length to 24 frames compared at D4, which uses 12 frames. The extended frame length creates 24 ESF framing bits. The use of the 24 bits in the ESF frame are listed in Table 4.

**Table 4** The Function of the 24 ESF Framing Bits

| | |
|---|---|
| 6 bits | Frame synchronization |
| 6 bits | Error detection |
| 12 bits | Communications link control and maintenance |

ESF uses only 6 bits for frame synchronization compared to the 12 synchronizing bits used in D4 framing. ESF uses 6 bits for computing an error check code. The code is used to verify the data transmission was received without errors. Twelve bits of the ESF frame are used for maintenance and control of the communications link. Examples of the use of the maintenance and control bits include obtaining performance data from the link and configuring loopbacks for testing the link. A **loopback** is when the data is routed back to the sender.

**Loopback**
data is routed back to the sender

Three loopback tests are shown in Figure 6. The loopback test marked A is used to test the cable connecting the router to the CSU/DSU. Loopback test B is used to test the link through the CSU/DSU. Loopback test C tests the CSU and the link to Telco.

## Line Coding Formats

The data connection to the communications carrier requires that the proper data encoding format be selected for the CSU/DSU. The data are encoded so that timing information of the binary stream is maintained and the logical 1s and 0s can still be detected.

**AMI**
alternate mark inversion

A fundamental coding scheme that was developed for transmission over T1 circuits is alternate mark inversion **(AMI)**. The AMI code provides for alternating

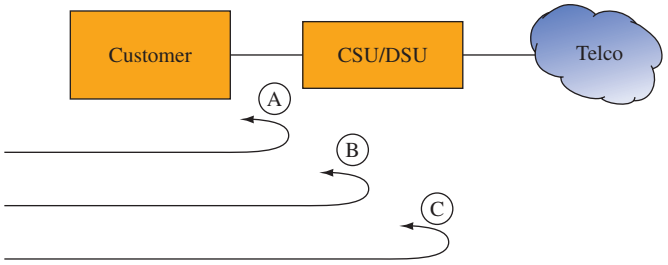


(A) Tests the cable connecting the router to the CSU/DSU

(B) Tests the link through the CSU/DSU

(C) Tests the CSU/DSU and the link to Telco

FIGURE 6 Three loopback configurations used to test the serial communications link.

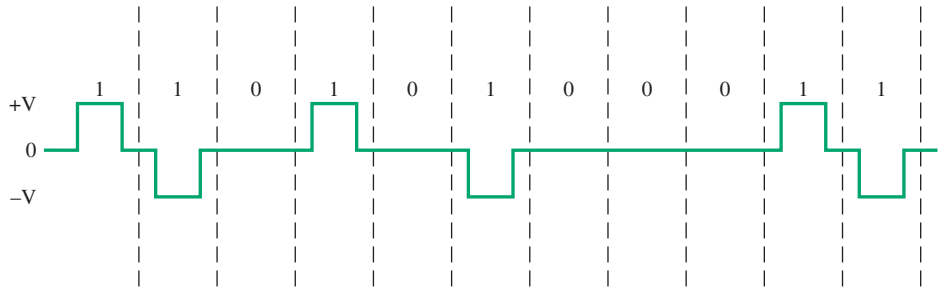


FIGURE 7 An example of the AMI data encoding format.

voltage level pulses (+V and −V) for representing the ones. This technique removes the DC component of the data stream almost completely, which helps to maintain synchronization. An example of the AMI coded waveform is shown in Figure 7. Notice that successive 1s are represented by pulses in the opposite direction (+V and −V). This is called **bipolar coding.**

**Bipolar Coding**
successive ones are represented by pulses in the opposite voltage direction

The 0s have a voltage level of 0 V. Notice that when there are successive 0s a straight line at 0 V is generated. A flat line generated by a long string of 0s can produce a loss of timing and synchronization. This deficiency can be overcome by the transmission of the appropriate start, stop, and synchronizing bits, but this comes at the price of adding overhead bits to the data transmission and consuming a portion of the data communication channel's bandwidth.

The bipolar 8 zero substitution **(B8ZS)** data encoding format was developed to improve data transmission over T1 circuits. T1 circuits require that a minimum ones density level be met so that the timing and synchronization of the data link are maintained. Maintaining a **minimum ones density** means that a pulse is intentionally sent in the data stream, even if the data being transmitted is a series of 0s. Intentionally inserting the pulses in the data stream helps to maintain the timing and synchronization of the data stream. The inserted data pulses include two **bipolar violations,** which means that the pulse is in the same voltage direction as the previous pulse in the data stream.

**B8ZS**
bipolar 8 zero substitution

**Minimum Ones Density**
a pulse is intentionally sent in the data stream even if the data being transmitted is a series of 0s only

**Bipolar Violation**
the pulse is in the same voltage direction as the previous pulse

In B8ZS encoding, eight consecutive 0s are replaced with an 8-bit sequence that contains two intentional bipolar violations. An example of B8ZS encoding is shown in Figure 8 for both cases of bipolar swing prior to the transmission of eight consecutive 0s. Figure 8(a) shows the bipolar swing starting with a +V, while Figure 8(b) shows the bipolar swing starting with −V. The receiver detects the bipolar violations in the data stream and replaces the inserted byte (8 bits) with all 0s to recover the original data stream. The result is that timing is maintained without corrupting the data. The advantage of using the B8ZS encoded fromat is that the bipolar violations enable the timing of the data transmission to remain synchronized without the need for overhead bits. This provides the use of the full data capacity of the channel.

**HDLC**
high-level data link control; a synchronous proprietary protocol

**PPP**
point-to-point protocol

**Data Encapsulation**
properly formatting the data for transport over a serial communications line

Two other serial line protocols commonly used in wide area networking are high-level data link control **(HDLC)** and point-to-point protocol **(PPP).** Both protocols are used to carry data over a serial line connection, typically over direct connections such as with T1. The hardware at each end of the data connection must be configured with the proper data encapsulation. **Data encapsulation** means that the data is packaged properly for transport over a serial communications line. The type

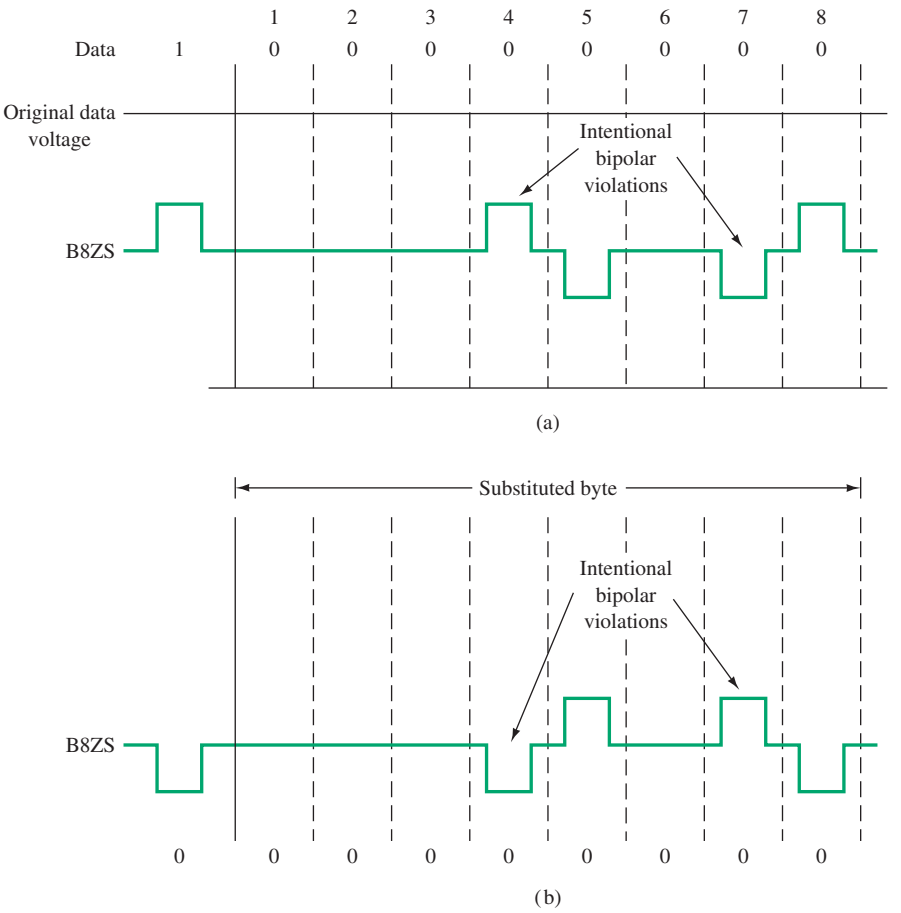


FIGURE 8 Intentional bipolar violations in B8ZS encoding.

of encapsulation depends on the hardware used to make the connection. The HDLC data encapsulation formats are implemented differently by some vendors, and some equipment is not always interoperable with other equipment, even though they both have specified the HDLC encapsulation. In that case, another encapsulation format such as PPP can be used to make the direct connection.

## Packet Switching

**Packets**
segments of data

**Statistical Concentration**
processors at switching centers directing packets so that a network is used most efficiently

In this data technique, data are divided into small segments called **packets.** A typical packet size is 1000 bits. The individual packets of an overall message do not necessarily take the same path to a destination. They are held for very short periods of time at switching centers and are therefore transmitted in near real time. The processors at the switching centers monitor the packets continuously from the standpoint of source, destination, and priority. The processors then direct each packet so the network is used most efficiently. The process is termed **statistical concentration.** The price paid for the very high efficiency afforded and near-real-time transmission is the need for

very complex protocols and switching arrangements. As packet switching technology progresses, the user may not need to choose in advance between packet and circuit switching; the techniques may merge. This could be the result of "fast" packet switches. The development of packet switch systems operating at millions of packets per second could eliminate the need for circuit switching.

## Frame Relay

A **frame relay** is a packet switching network designed to carry data traffic over a **public data network** (PDN; e.g., **Telco,** the local telephone company). Frame relay is an extension of the X.25 packet switching system; however, frame relay does not provide the error-checking and data-flow control of X.25. **X.25** was designed for data transmission over analog lines, and frame relay is operated over higher-quality, more reliable digital data lines.

Frame relay operates on the premise that the data channels will not introduce bit errors or worst-case minimal bit errors. Without the overhead bits for error checking and data-flow control, the transfer of data in a frame relay system is greatly improved. If an error is detected, then the receiver system corrects the error. The frame relay protocol enables calls or connections to be made within a data network. Each data frame contains a connection number that identifies the source and destination addresses.

The commercial carrier (telco) provides the switch for the frame relay network. Telco provides a guaranteed data rate, or **committed information rate (CIR),** based on the service and bandwidth requested by the user. For example, the user may request a T1 data service with a CIR of 768 kbps. A T1 connection allows a maximum data rate of 1.544 Mbps. The network (Telco) allows for bursty data transmissions and will allow the data transfer to go up to the T1 connection carrier bandwidth, even though the CIR is 768 kbps. **Bursty** means that the data rates can momentarily exceed the leased CIR data rate of the service. Communication carriers use what is called a **committed burst information rate (CBIR),** which enables subscribers to exceed the committed information rate (CIR) during times of heavy traffic. *Note*: The bursty data transmission rate can never exceed the data rate of the physical connection. For example, the maximum data rate for a T1 data service is 1.544 Mbps, and the bursty data rate can never exceed this rate.

## Asynchronous Transfer Mode (ATM)

The asynchronous transfer mode **(ATM)** is a cell relay technique designed for voice, data, and video traffic. Cell relay is considered to be an evolution of **packet switching** because packets or cells are processed at switching centers and directed to the best network for delivery. The stations connected to an ATM network transmit octets (8 bits of data) in a cell that is 53 octets (bytes) long. Forty-eight bytes of the cell are used for data (or **payload**) and five bytes are used for the cell header. The ATM cell header contains the data bits used for error checking, virtual circuit identification, and payload type.

All ATM stations are always transmitting cells, but the empty cells are discarded at the ATM switch. This technique provides more efficient use of the available bandwidth and allows for bursty traffic. The station is also guaranteed access to the network with a specified data frame size. This is not true for IP networks,

**Frame Relay**
a packet switching network designed to carry data traffic over a public data network

**Public Data Network**
a local telephone company or a communications carrier

**Telco**
the local telephone company

**X.25**
a packet-switched protocol designed for data transmission over analog lines

**Committed Information Rate**
guaranteed data rate or bandwidth to be used in the frame relay connection

**Bursty**
a state in which the data rates can momentarily exceed the leased data rate of the service

**Committed Burst Information Rate (CBIR)**
enables subscribers to exceed the committed information rate (CIR) during times of heavy traffic

**ATM**
asynchronous transfer mode; a cell relay network designed for voice, data, and video traffic

**Packet Switching**
packets are processed at switching centers and directed to the best network for delivery

**Payload**
another name for the data being transported

where heavy traffic can bring the system to a crawl. The ATM protocol was designed for use in high-speed multimedia networking, including operation in high-speed data transmission from T1 up to T3, E3, and SONET. SONET is the synchronous optical network. The standard data rate for ATM is 155 Mbps, although the data rates for ATM are continually evolving.

**Virtual Path Connection (VPC)**
used to connect the end users

**Virtual Channel Connection (VCC)**
carries the ATM cell from user to user

**SVC**
switched virtual circuit

ATM is connection oriented and uses two different types of connections, a **virtual path connection (VPC)** and a **virtual channel connection (VCC).** A virtual channel connection is used to carry the ATM cell data from user to user. The virtual channels are combined to create a virtual path connection that is used to connect the end users. Virtual circuits can be configured as permanent virtual connections (PVCs) or they can be configured as switched virtual circuits **(SVCs).**

Five classes of services are available with ATM. These classes are based on the needs of the user. In some applications, the users needs a constant bit rate for applications such as teleconferencing. In another application, the user may need only limited periods of higher bandwidth to handle bursty data traffic. The five ATM service classes are provided in Table 5.

**Table 5** The Five ATM Service Classes

| ATM Service Class | Abbreviation | Description | Typical Use |
|---|---|---|---|
| Constant bit rate | CBR | Cell rate is constant | Telephone, videoconferencing, television |
| Variable bit rate/ not real time | VBR-NRT | Cell rate is variable | Email |
| Variable bit rate/ real time | VBR-RT | Cell rate is variable but can be constant on demand | Voice traffic |
| Available bit rate | ABR | Users are allowed to specify a minimum cell rate | File transfers/ email |
| Unspecified bit rate | UBR | | TCP/IP |

**VPI**
virtual path identifier

**VCI**
virtual channel identifier

ATM uses an 8-bit virtual path identifier **(VPI)** to identify the virtual circuits used to deliver cells in the ATM network. A 16-bit virtual circuit identifier **(VCI)** is used to identify the connection between the two ATM stations. The VPI and VCI numbers are provided by Telco. Together, the numbers are used to create an ATM permanent virtual circuit (PVC) through the ATM cloud.



## 5 Time-Division Multiple Access (TDMA)

**Time-Division Multiple Access (TDMA)**
a technique used to transport data from multiple users over the same data channel

**Time-division multiple access (TDMA)** is a technique used to transport data from multiple sources over the same serial data channel. TDMA techniques are used for transporting data over wired systems and are also used for wireless communication (e.g., some cellular telephones). An example of generating a TDMA output is provided in Figure 9. A1–A4, B1–B4, and C1–C4 represent digital data from three different users. A multiplexer (MUX) is used to combine the source data into one serial data stream. A key to successful data multiplexing is that the multiplexing

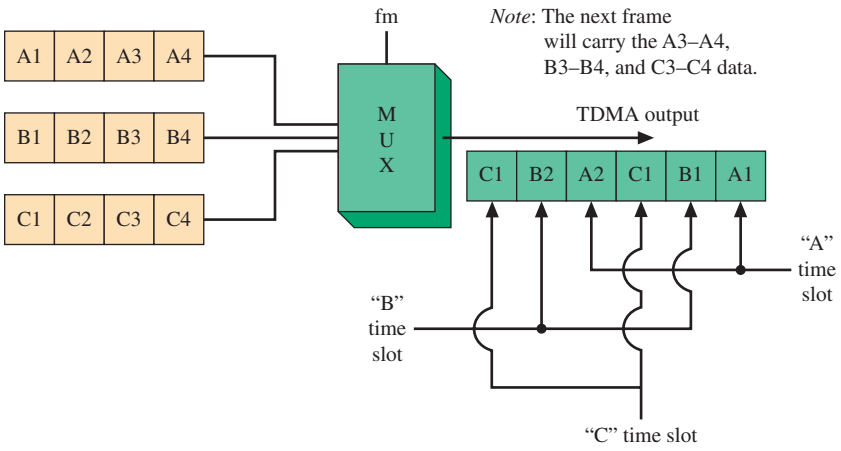


FIGURE 9 An example of generating a TDMA output.

frequency ($f_m$) must be fast enough so that the throughputs of the A, B, and C data are output fast enough, so that the system does not become congested and none of the data are lost.

The TDMA output data stream (Figure 9) shows the placement of the A, B, and C data in the TDMA frame. Each block represents a **time slot** within the frame. The time slot provides a fixed location (relative in time to the start of a data frame) for each group of data so at the receiver, the data can be recovered easily. The process of recovering the data is shown in Figure 10. The serial data is input into a **demultiplexer (DMUX),** which recovers the A, B, and C group data. If only the information in the A time slots is to be recovered, then the data in the B and C time slots are ignored.

In wireless systems the arrival of the TDMA data can be an issue because of potential multipath RF propagation problems with stationary systems and the added RF propagation path problems introduced by mobile communications. To compensate for the variation in data arrival times, **guard times** are added to the TDMA frame. If the data arrive too closely together, then potential **intersymbol interference (ISI)** due to data overlapping can occur, resulting in an increase in the bit error rate (BER). The guard times provide an additional margin of error, thereby minimizing intersymbol interference and bit errors.

**Time Slot**
provides a fixed location (relative in time to the start of a data frame) for each group of data

**Demultiplexer (DMUX)**
recovers the individual groups of data from the TDMA serial data stream

**Guard Times**
time added to the TDMA frame to allow for the variation in data arrival

**Intersymbol Interference (ISI)**
the overlapping of data, which can increase the bit error rate

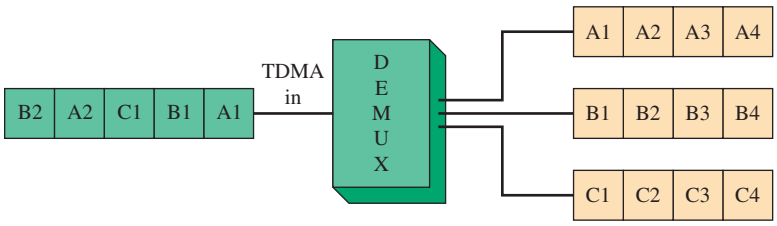


FIGURE 10 An example of recovering TDMA data.

## 6 Delta and Pulse Modulation

**Delta Modulation** digital modulation technique in which the encoder transmits information regarding whether the analog information increases or decreases in amplitude

**Slope Modulation** another name for delta modulation

**Tracking ADC** an ADC whose output indicates input changes rather than absolute values of input

**Slope Overload** in delta modulators, when the analog signal has a high rate of amplitude change, the encoder can produce a distorted analog signal

**Continuously Variable Slope Delta** increasing the step-size in a delta modulation system when three or more consecutive ones or zeros occur

**Delta modulation** (DM), sometimes called **slope modulation,** is another truly digital system (as is PCM). It transmits information only to indicate whether the analog signal it encodes is to "go up" or "go down." This process is shown in Figure 11. Note that the encoder outputs are highs or lows that "instruct" whether to go up or go down, respectively. The relative simplicity of this system is readily apparent as compared to PCM. Delta modulation takes advantage of the fact that voice signals do not change abruptly and there is generally only a small change in level from one sample to the next. On the other hand, PCM can respond to very abrupt level changes between samples, such as analog signals that have been time-domain multiplexed before encoding.

A schematic for a delta modulator is shown in Figure 12. A demodulator would consist of an integrator (just like the one in Figure 12) followed by a sharp-cut-off low-pass filter. The integrator output would look like waveform B in Figure 12. The filter smooths it out to provide the final analog signal. (You will be asked to describe/explain fully the modulator's operation in a question at the end of the chapter.) Further detail on the demodulation process is provided in Figure 13.

The major advantage of delta modulation is simplicity. The delta modulator is called a **tracking ADC** because it follows the contours of the input and provides output that shows input changes rather than exact values. It does not require the synchronization of PCM systems and inherently provides a serial stream of bits, so that there is no need for a parallel-to-serial converter.

A difficulty faced by these systems is **slope overload.** When the analog signal has a high rate of change, the delta modulator can "fall behind" and a distorted output results. An increased sample rate could be used, but this necessitates a higher bandwidth for transmission of the signal. In systems where this is a problem, a technique called **continuously variable slope delta** (CVSD) modulation is used. A typical CVSD scheme is to increase the step-size whenever there is a longer run than three successive 1s or 0s. When the modulator catches up (as indicated by a change from 1 to 0 or 0 to 1), the step-size returns to normal. CVSD modulation is

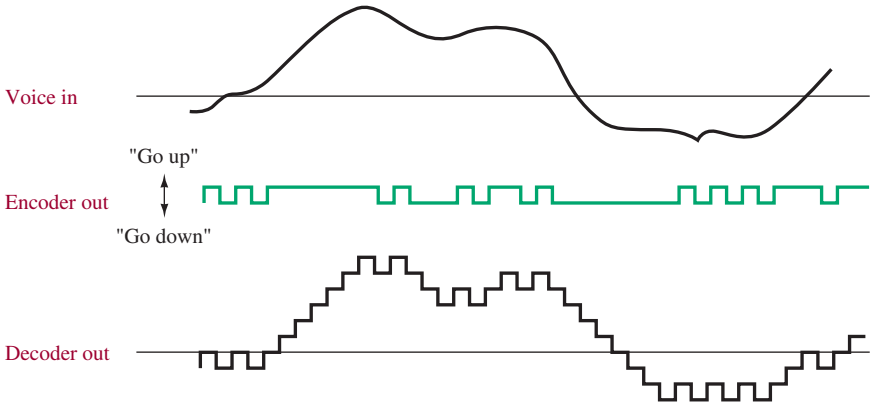


FIGURE 11 Linear delta modulation.

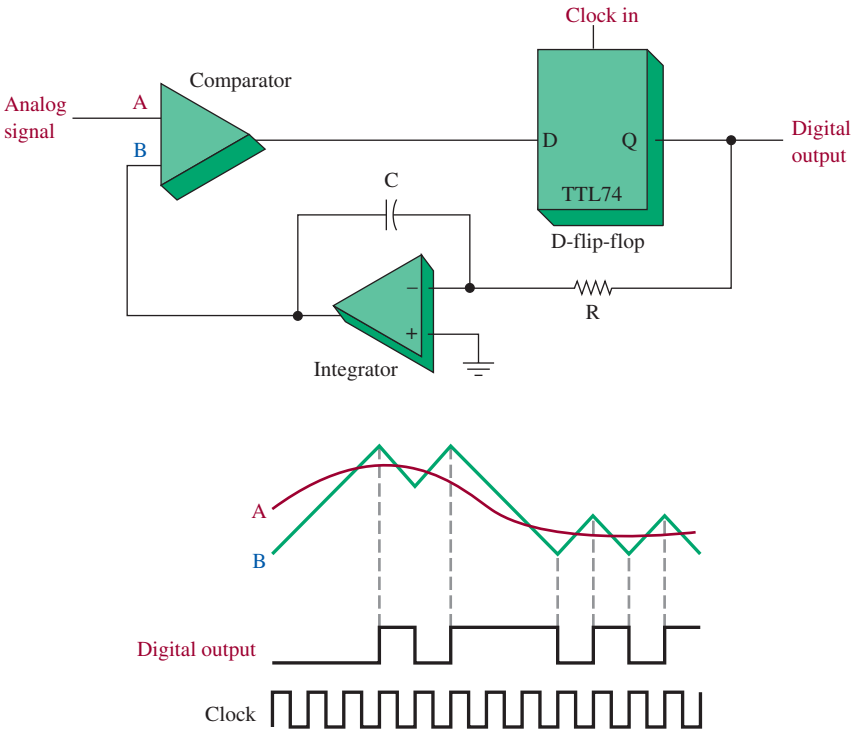


FIGURE 12 Delta modulator (linear).

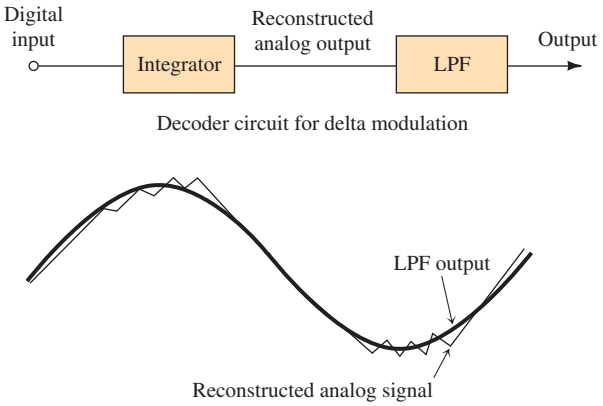


FIGURE 13 Demodulation circuit for delta modulation.

accomplished by using decision circuitry to count the number of 1s and 0s from the output of the D-flip-flop and a variable gain amplifier.

CVSD systems are typically implemented using a single LSI chip for both the transmitter and receiver sections. Similarly, the algorithm used for transmitting is used to reverse the process for reception. The net overall effect of CVSD can be compared to companding, except that CVSD depends on past values and adapts, while companding is a fixed algorithm.

## Pulse Modulation

You have undoubtedly drawn graphs of *continuous* curves many times during your education. To do that, you took data at some finite number of discrete points, plotted each point, and then drew the curve. Drawing the curve may have resulted in a very accurate replica of the desired function even though you did not look at every possible point. In effect, you took *samples* and guessed where the curve went between the samples. If the samples had sufficiently close spacing, the result is adequately described. It is possible to apply this line of thought to the transmission of an electrical signal, that is, to transmit only the samples and let the receiver reconstruct the total signal with a high degree of accuracy. This is termed **pulse modulation.**

**Pulse Modulation**
the process of using some characteristic of a pulse (amplitude, width, position) to carry an analog signal

The key distinction between pulse modulation and normal AM or FM is that in AM or FM some parameter of the modulated wave varies continuously with the message, whereas in pulse modulation some parameter of a sample pulse is varied by each sample value of the message. The pulses are usually of very short duration so that a pulse modulated wave is "off" most of the time. This factor is the main reason for using pulse modulation because it allows

1. transmitters to operate on a very low duty cycle ("off" more than "on"), as is desirable for certain microwave devices and lasers, and
2. the time intervals between pulses to be filled with samples of other messages.

**Time-Division Multiplexing**
two or more intelligence signals are sequentially sampled to modulate the carrier in a continuous, repeating fashion

**Nyquist Rate**
the sampling frequency must be at least twice the highest frequency of the intelligence signal or there will be distortion that cannot be corrected by the receiver

The latter reason conveniently allows several different messages to be transmitted on the same channel. This is the form of multiplexing known as **time-division multiplexing** (TDM). It is analogous to computer time sharing, where several users utilize a computer simultaneously.

A signal sampled at twice the rate of its highest significant frequency component can be reconstructed fully at the receiver to a high degree of accuracy. Stated inversely, a given bandwidth can carry pulse signals of half its high-frequency cutoff. This is known as the **Nyquist rate.** In the case of voice transmission, the standard sampling rate is 8 kHz, it being just slightly more than twice the highest significant frequency component. This implies a pulse rate of 8 kHz or a 125-$\mu$s period. Because a pulse duration of 1 $\mu$s may be adequate, it is easy to see that several different messages could be multiplexed (TDM) on the channel, or alternatively it would allow a high peak transmitted power with a much lower (1/125) average power. The high peak power can provide a very high signal-to-noise ratio or a greater transmission range.

Note that a price must be paid for system gains obtained by pulse modulation schemes. More important than the greater equipment complexity is the requirement for greater channel (bandwidth) size. If a maximum 3-kHz signal directly amplitude-modulates a carrier, a 6-kHz bandwidth is required. If a 1-$\mu$s pulse does the modulating, just allowing its fundamental component of 1/1 $\mu$s or 1 MHz to do the modulating means a 2-MHz bandwidth is required in AM. In spite of the large bandwidth required, TDM is still preferable (if not the only possible way) to using 100 different transmitters, antennas or transmission lines, and receivers in cases where large numbers of messages must be conveyed simultaneously.

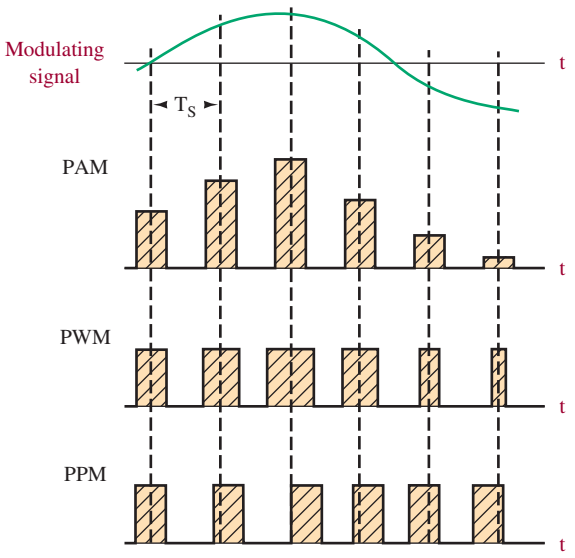


FIGURE 14 Types of pulse modulation.

In its strictest sense, pulse modulation is not modulation but rather a *message-processing* technique. The message to be transmitted is sampled by the pulse, and the pulse is subsequently used to either amplitude- or frequency-modulate the carrier. The three basic forms of pulse modulation are illustrated in Figure 14. There are numerous varieties of pulse modulation, and no standard terminology has yet evolved. The three types we shall consider here are usually termed **pulse-amplitude modulation** (PAM), **pulse-width modulation** (PWM), and **pulse-position modulation** (PPM). For the sake of clarity, the illustration of these modulation schemes has greatly exaggerated the pulse widths. Because a major application of pulse modulation occurs when TDM is to be used, shorter pulse durations, leaving room for more multiplexed signals, are obviously desirable. As shown in Figure 14, the pulse parameter that is varied in step with the analog signal is varied in direct step with the signal's value at each sampling interval. Notice that the pulse amplitude in PAM and pulse width in PWM are not zero when the signal is minimum. This is done to allow a constant pulse rate and is important in maintaining synchronization in TDM systems.

**Pulse-Amplitude Modulation**
sampling short pulses of the intelligence signal; the resulting pulse amplitude is directly proportional to the intelligence signal's amplitude

**Pulse-Width Modulation**
sampling short pulses of the intelligence signal; the resulting pulse width is directly proportional to the intelligence signal's amplitude

**Pulse-Position Modulation**
sampling short pulses of the intelligence signal; the resulting position of the pulses is directly proportional to the intelligence signal's amplitude

## Pulse-Amplitude Modulation

In pulse-amplitude modulation (PAM), the pulse amplitude is made proportional to the modulating signal's amplitude. This is the simplest pulse modulation to create because a simple sampling of the modulating signal at a periodic rate can be used to generate the pulses, which are subsequently used to modulate a high-frequency carrier. An eight-channel TDM PAM system is illustrated in Figure 15. At the transmitter, the eight signals to be transmitted are periodically sampled. The sampler illustrated is a rotating machine making periodic brush contact with each signal. A similar rotating machine at the receiver is used to distribute the eight separate signals, and it must be synchronized to the transmitter. A mechanical

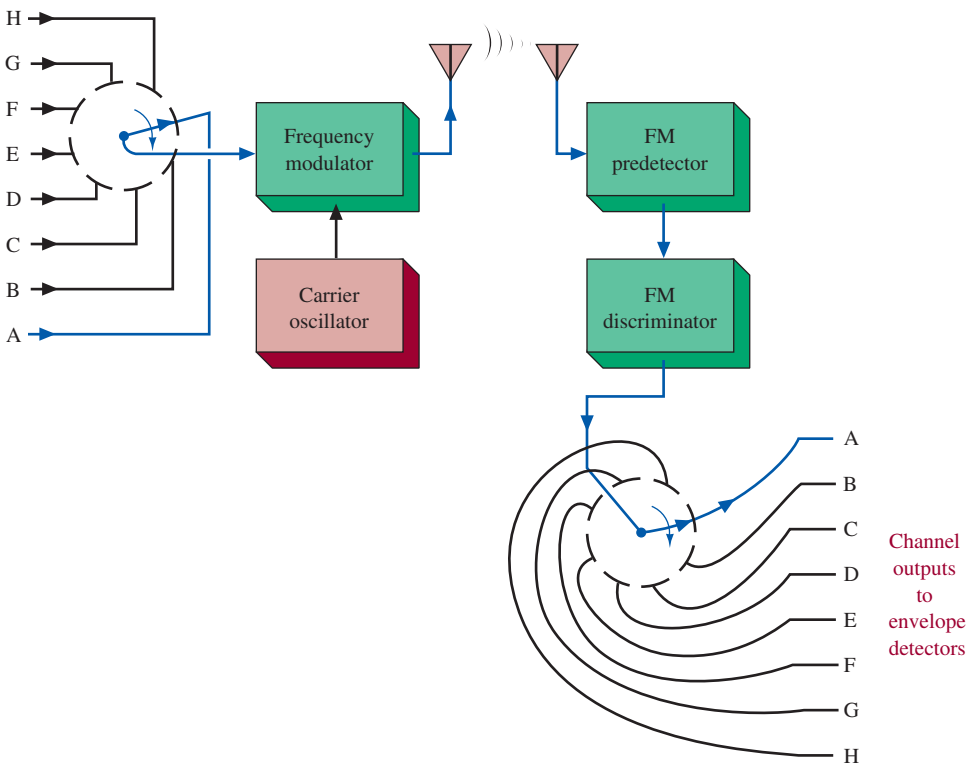


FIGURE 15 Eight-channel TDM PAM system.

sampling system such as this may be suitable for the low sampling rates like those encountered in some telemetry systems but it would not be adequate for the 8-kHz rate required for voice transmissions. In that case, an electronic switching system would be incorporated.

At the transmitter, the variable amplitude pulses are used to frequency-modulate a carrier. A rather standard FM receiver recreates the pulses, which are then applied to the electromechanical *distributor* going to the eight individual channels. This distributor is virtually analogous to the distributor in a car that delivers high voltage to eight spark plugs in a periodic fashion. The pulses applied to each line go into an envelope detector that serves to recreate the original signal. This can be a simple low-pass *RC* filter such as that used following the detection diode in a standard AM receiver.

**Pulse-Time Modulation**
modulation schemes that vary the timing (not the amplitude) of pulses

**Pulse-Duration Modulation**
another name for pulse-width modulation

**Pulse-Length Modulation**
another name for pulse-width modulation

While PAM finds some use due to its simplicity, PWM and PPM use constant amplitude pulses and provide superior noise performance. The PWM and PPM systems fall into a general category termed **pulse-time modulation** (PTM) because their timing, and not amplitude, is the varied parameter.

## Pulse-Width Modulation

Pulse-width modulation (PWM), a form of PTM, is also known as **pulse-duration modulation** (PDM) and **pulse-length modulation** (PLM). A simple means of

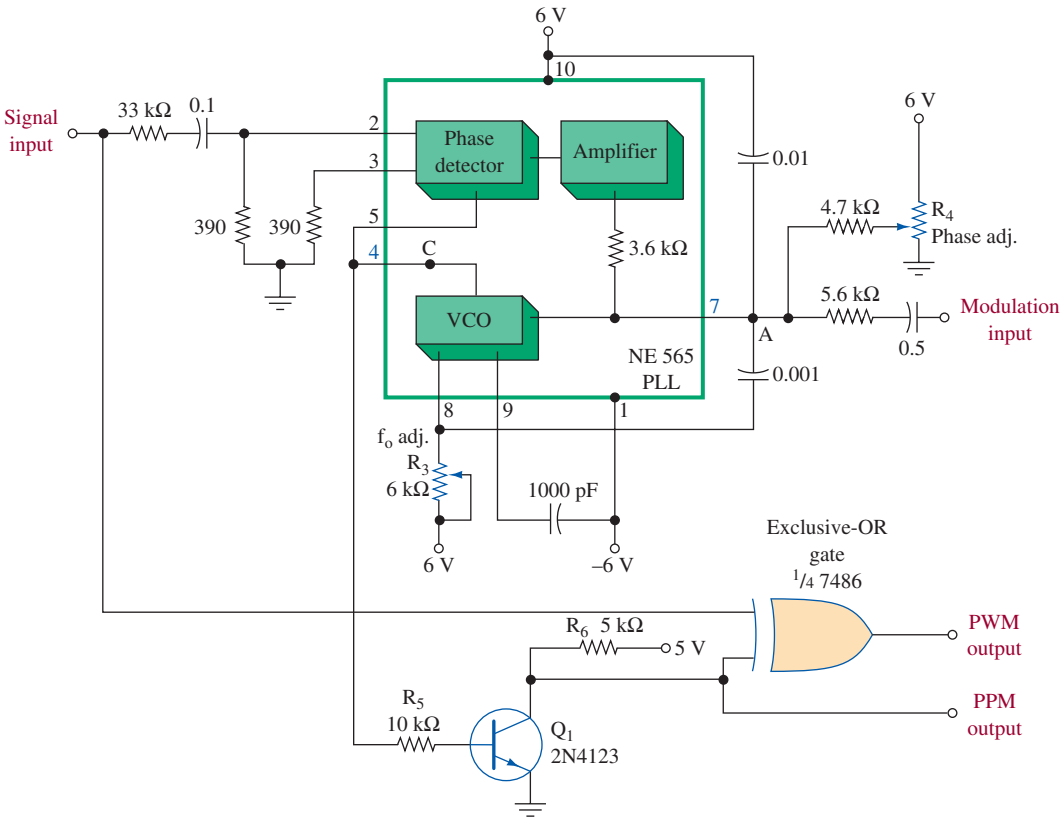


FIGURE 16 PLL generation of PWM and PPM.

PWM generation is provided in Figure 16 using a 565 PLL. It actually creates PPM at the VCO output (pin 4), but by applying it and the input pulses to an exclusive-OR gate, PWM is also created. For the phase-locked loop (PLL) to remain locked, its VCO input (pin 7) must remain constant. The presence of an external modulating signal upsets the equilibrium. This causes the phase detector output to go up or down to maintain the VCO input (control) voltage. However, a change in the phase detector output also means a change in phase difference between the input signal and the VCO signal. Thus, the VCO output has a phase shift proportional to the modulating signal amplitude. This PPM output is amplified by $Q_1$ in Figure 16 just prior to the output. The exclusive-OR circuit provides a high output only when just one of its two inputs is high. Any other input condition produces a low output. By comparing the PPM signal and the original pulse input signal as inputs to the exclusive-OR circuit, the output is a PWM signal at twice the frequency of the original input pulses.

Adjustment of $R_3$ varies the center frequency of the VCO. The $R_4$ potentiometer may be adjusted to set up the quiescent PWM duty cycle. The outputs (PPM or PWM) of this circuit may then be used to modulate a carrier for subsequent transmission.

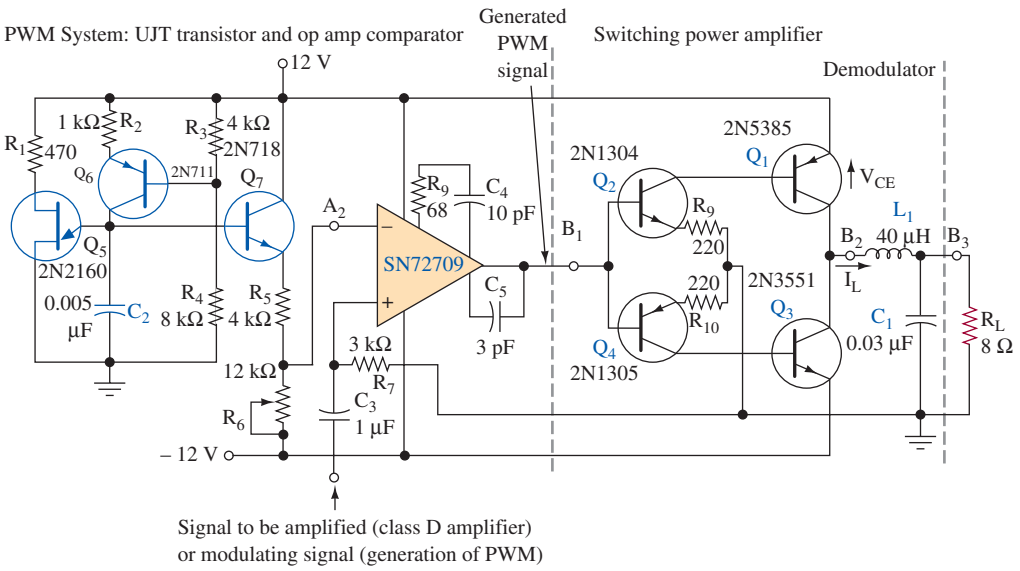


FIGURE 17 PWM generator and class D power amplifier.

***Class D Amplifier and PWM Generator*** PWM forms the basis for a very efficient form of power amplification. The circuit in Figure 17 is a so-called class D amplifier because the actual power amplification is provided to the PWM signal, and because it is of constant amplitude, the transistors used can function between cutoff and saturation. This allows for maximum efficiency (in excess of 90 percent) and is the reason for the increasing popularity of class D amplifiers as a means of amplifying any analog signal.

The circuit of Figure 17 illustrates another common method for generation of PWM and also illustrates class D amplification. The $Q_6$ transistor generates a constant current to provide a linear charging rate to capacitor $C_2$. The unijunction transistor, $Q_5$, discharges $C_2$ when its voltage reaches $Q_5$'s firing voltage. At this time $C_2$ starts to charge again. Thus, the signal applied to $Q_7$'s base is a linear saw tooth as shown at *A* in Figure 18. That sawtooth following amplification by the $Q_7$ emitter-follower in Figure 17 is applied to the op amp's inverting input. The modulating signal or signal to be amplified is applied to its noninverting input, which causes the op amp to act as a comparator. When the sawtooth waveform at *A* in Figure 18 is less than the modulating signal *B*, the comparator's output (*C*) is high. At the instant *A* becomes greater than *B, C* goes low. The comparator (op amp) output is therefore a PWM signal. It is applied to a push-pull amplifier ($Q_1$, $Q_2$, $Q_3$, $Q_4$) in Figure 17, which is a highly efficient switching amplifier. The output of this power amp is then applied to a low-pass *LC* circuit ($L_1$, $C_1$) that converts back to the original signal (*B*) by integrating the PWM signal at *C*, as shown at *D* in Figure 18. The output of the op amp in Figure 17 would be used to modulate a carrier in a communications system, while a simple integrating filter would be used at the receiver as the detector to convert from pulses to the original analog modulating signal.

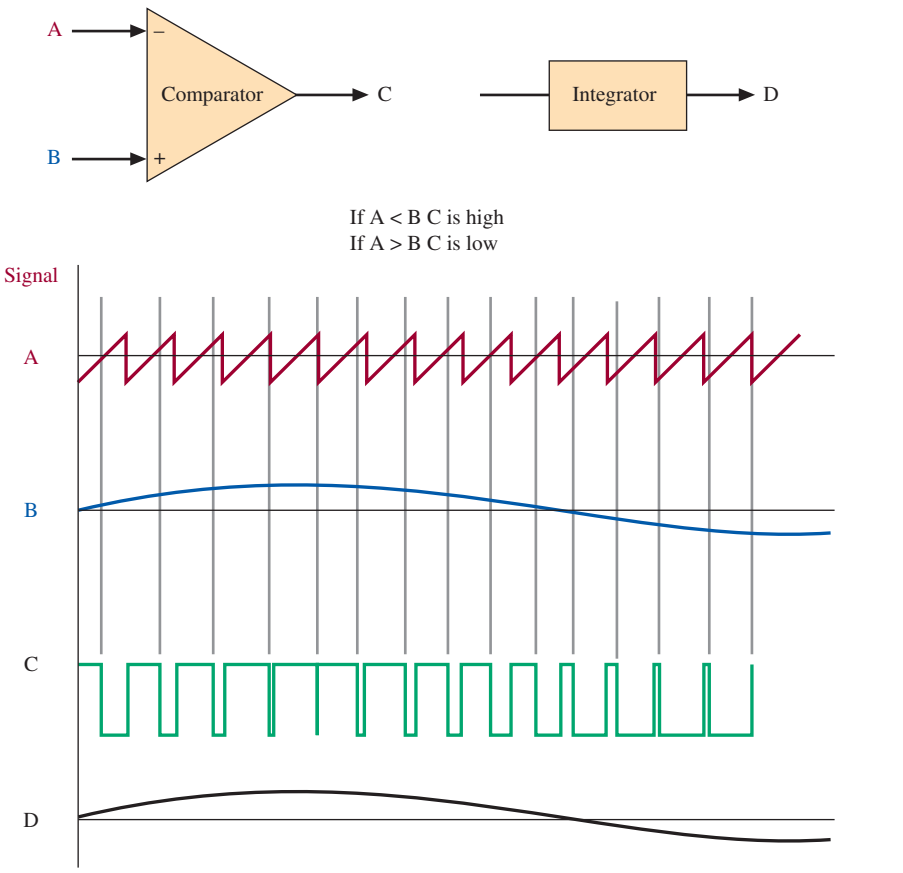


FIGURE 18 PWM generation waveforms.

## Pulse-Position Modulation

PWM and pulse-position modulation (PPM) are very similar, a fact that is underscored in Figure 19, which shows PPM being generated from PWM. Because PPM has superior noise characteristics, it turns out that the major use for PWM is to generate PPM. By inverting the PWM pulses in Figure 19 and then differentiating them, the positive and negative spikes shown are created. By applying them to a Schmitt trigger sensitive only to positive levels, a constant amplitude and constant pulse-width signal is formed. However, the position of these pulses is variable and now proportional to the original modulating signal, and the desired PPM signal has been generated. The information content is *not* contained in either the pulse amplitude or width as in PAM and PWM, which means the signal now has a greater resistance to any error caused by noise. In addition, when PPM modulation is used to amplitude-modulate a carrier, a power savings results because the pulse width can be made very small.

At the receiver, the detected PPM pulses are usually converted to PWM first and then converted to the original analog signal by integrating as previously described. Conversion from PPM to PWM can be accomplished by feeding the

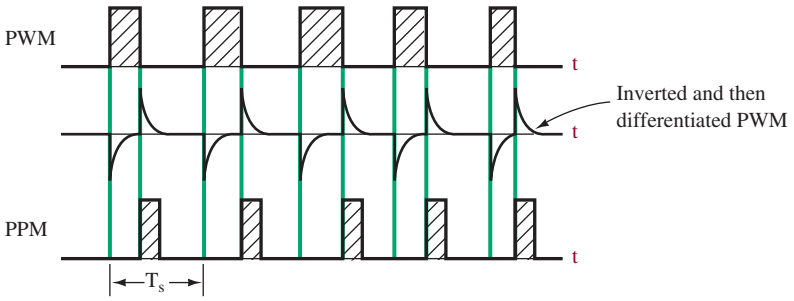


FIGURE 19 PPM generation.

PPM signal into the base of one transistor in a flip-flop. The other base is fed from synchronizing pulses at the original (transmitter) sampling rate. The period of time that the PPM-fed transistor's collector is low depends on the difference in the two inputs, and it is therefore the desired PWM signal.

This detection process illustrates the one disadvantage of PPM compared to PAM and PWM. It requires a pulse generator synchronized from the transmitter. However, its improved noise and transmitted power characteristics make it the most desirable pulse modulation scheme.

## Demodulation

The process of demodulation is one of reproducing the original analog signal. We have noticed that the PAM signals contained harmonics of higher frequencies. Reshaping the original information signal would necessarily require removal of the higher frequencies. The use of a low-pass filter will accomplish this task. The upper cutoff frequency is selected to eliminate the highest frequency contained in the information. Figure 20 shows a block diagram of a PAM demodulator.

Demodulating a PWM signal is simple. The approach is similar to demodulation of the PAM signal. A low-pass filter can be used along with some wave-shaping circuit. By using an RS flip-flop, the PPM signal can be converted to PWM and then demodulated using the technique for demodulating PWM.

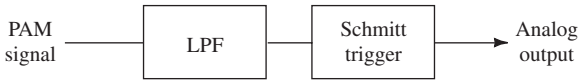


FIGURE 20 Block diagram of a PAM demodulator.

## Data Transmission via AM

The earliest form of data transmission using amplitude modulation occurred in the very first days of radio about 100 years ago. The International Morse Code was transmitted by simply turning a carrier on and off. The Morse Code is not a true

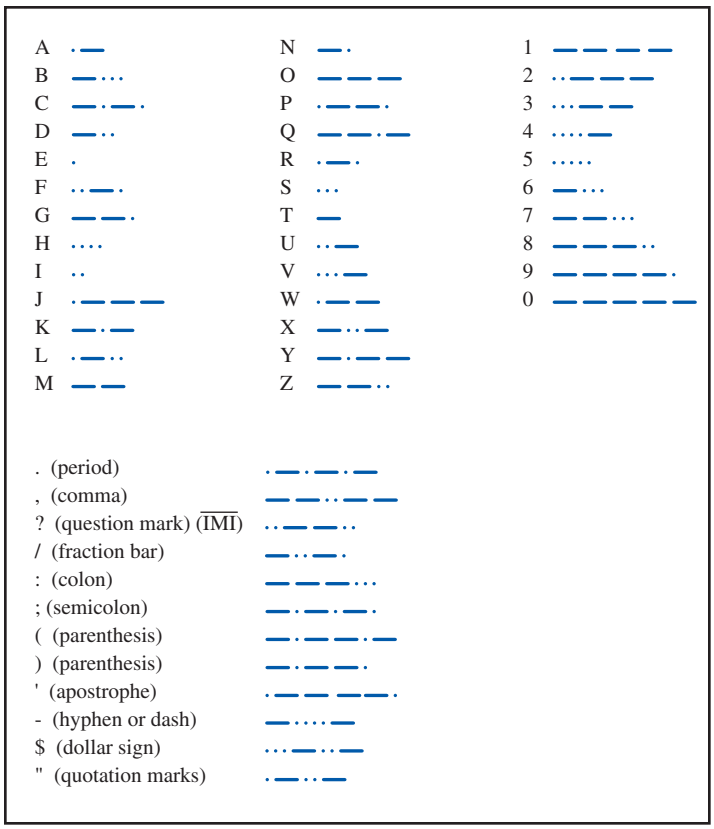


FIGURE 21 International Morse Code.

binary code because it not only includes marks and spaces but also differentiates between the duration of these conditions. The Morse Code is still used in amateur radio-telegraphic communications. A human skilled at code reception can provide highly accurate decoding. The International Morse Code is shown in Figure 21. It consists of dots (short mark), dashes (long mark), and spaces. A *dot* is made by pressing the telegraph key down and allowing it to spring back rapidly. The length of a dot is one basic time unit. The *dash* is made by holding the key down (keying) for three basic time units. The spacing between dots and dashes in one letter is one basic time unit and between letters is three units. The spacing between words is seven units.

The most elementary form of transmitting highs and lows is simply to key a transmitter's carrier on and off. Figure 22(a) shows a dot, dash, dot waveform, while Figure 22(b) shows the resulting transmitter output if the mark allows the carrier to be transmitted and space cuts off transmission. Thus, the carrier is conveying intelligence by simply turning it on or off according to a prearranged code. This type of transmission is called **continuous wave** (CW); however, because the wave is periodically interrupted, it might more appropriately be called an interrupted continuous wave. As a concession to the CW misnomer, it is sometimes called **interrupted continuous wave** (ICW).

**Continuous Wave**
a type of transmission where a continuous sinusoidal waveform is interrupted to convey information

**Interrupted Continuous Wave**
a more accurate name for a continuous wave transmission

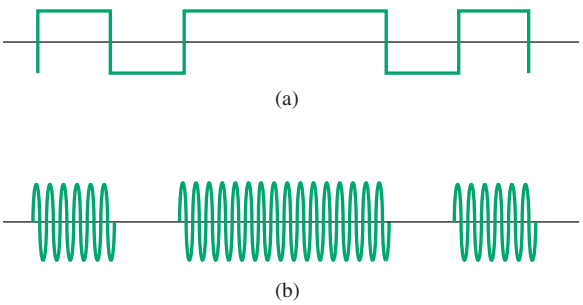


FIGURE 22 CW waveforms.

Whether the CW shown in Figure 22(b) is created by a hand-operated key, a remote-controlled relay, or an automatic system such as a computer, the rapid rise and fall of the carrier presents a problem. The steep sides of the waveform are rich in harmonic content, which means the channel bandwidth for transmission would have to be extremely wide or else adjacent channel interference would occur. This is a severe problem because a major advantage of coded transmission versus direct voice transmission is narrow bandwidth channels. The situation is remedied by use of an *LC* filter, as shown in Figure 23. The inductor $L_3$ slows down the rise time of the carrier, while the capacitor $C_2$ slows down the decay. This filter is known as a *keying filter* and is also effective in blocking the radio frequency interference (RFI), created by arcing of the key contacts, from being transmitted. This is accomplished by the $L_1$, $L_2$ RF chokes and capacitor $C_1$ that form a low-pass filter.

CW is a form of AM and therefore suffers from noise to a much greater extent than FM systems. The space condition (no carrier) is also troublesome to a receiver because at that time the receiver's gain is increased by AGC action to make received noise a problem. Manual receiver gain control helps but not if the received signal is fading between high and low levels, as is often the case. The simplicity

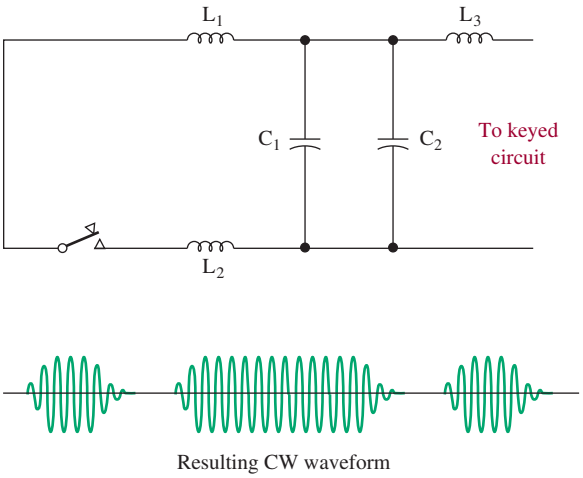


FIGURE 23 Keying filter and resulting waveform.

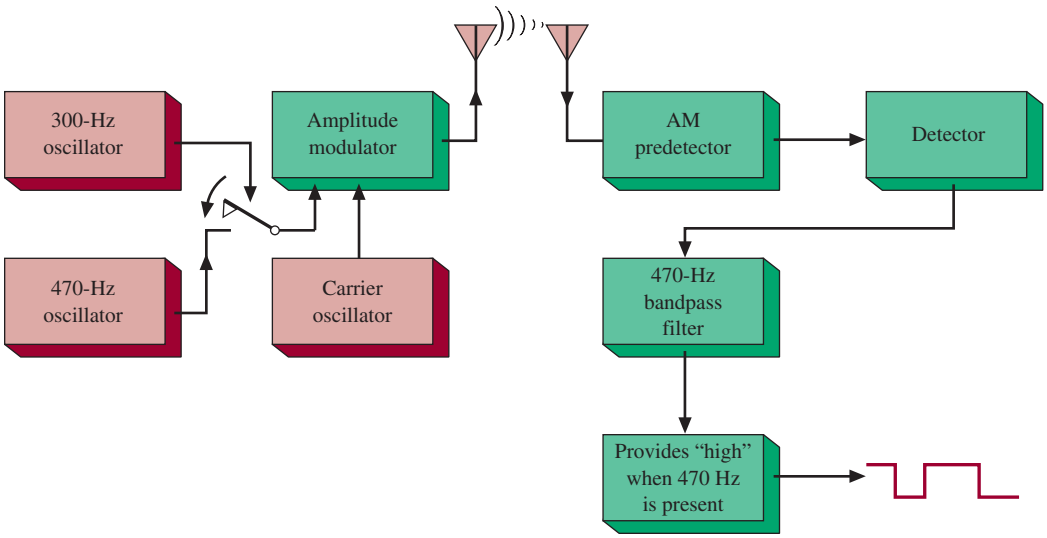


FIGURE 24 Two-tone modulation system (AM).

and narrow bandwidth of CW make it attractive to radio amateurs, but its major value today is to show the historical development of data transmission.

***Two-Tone Modulation*** Two-tone modulation is a form of AM, but in it the carrier is always transmitted. Instead of simply turning the carrier on and off, the carrier is amplitude-modulated by two different frequencies representing either a one or zero. The two frequencies are usually separated by 170 Hz. An example of such a telegraphy system is provided in Figure 24. When the transmitter is keyed, the carrier is modulated by a 470-Hz signal (1 condition); it is modulated by a 300-Hz signal for the 0 condition. At the receiver, after detection, either 300- or 470-Hz signals are present. A 470-Hz bandpass filter provides an output for the 1 condition that makes the output high whenever 470 Hz is present and low otherwise.

**Example 6**

*The two-tone modulation system shown in Figure 24 operates with a 10-MHz carrier. Determine all possible transmitted frequencies and the required bandwidth for this system.*

**Solution**

This is an amplitude modulation system; therefore, when the carrier is modulated by 300 Hz, the output frequencies will be 10 MHz and 10 MHz $\pm$ 300 Hz. Similarly, when modulated by 470 Hz, the output frequencies will be 10 MHz and 10 MHz $\pm$ 470 Hz. Those are all possible outputs for this system. The bandwidth required is therefore 470 Hz $\times$ 2 = 940 Hz, which means that a 1-kHz channel would be adequate.

Example 6 shows that two-tone modulation systems are very effective with respect to bandwidth utilized. One hundred 1-kHz channels could be sandwiched in

the frequency spectrum from 10 MHz to 10.1 MHz. The fact that a carrier is always transmitted eliminates the receiver gain control problems previously mentioned, and the fact that three different frequencies (a carrier and two side frequencies) are always being transmitted is another advantage over CW systems. In CW either one frequency, the carrier, or none is transmitted. Single-frequency transmissions are much more subject to ionospheric fading conditions than multifrequency transmissions.



## 7 Computer Communication

The data communication that takes place between computers and peripheral equipment is of two basic types—serial and parallel—and uses ASCII format. In addition, the data that are sent in serial form (i.e., one bit after another on a single pair of wires) may be classified as either synchronous or asynchronous.

**Asynchronous System**
the transmitter and receiver clocks free-run at approximately the same speed

**Start Bit, Stop Bit**
used to precede and follow each transmitted data word

**Synchronous System**
the transmitter and receiver clocks run at exactly the same frequency

In an **asynchronous system,** the transmit and receive clocks free-run at approximately the same speed. Each computer word is preceded by a **start bit** and followed by at least one **stop bit** to frame the word. In a **synchronous system** both sender and receiver are exactly synchronized to the same clock frequency. This is most often accomplished by having the receiver derive its clock signal from the received data stream.

Many choices are available today for selecting a serial communications interface. Most often the choice is dictated by the computer and the electronic equipment. For example, a spectrum analyzer might have to contain a GPIB and RS-232 interface, while a digital camera might contain a USB or Firewire interface. Industrial equipment might be interconnected using the RS422 or RS485 standard. This section addresses the key standards that the user may find on computer and electronic communications equipment, which include the following:

- USB
- Firewire
- RS232
- RS485
- RS422
- GPIB

### Universal Serial Bus (USB)

**Universal Serial Bus (USB)**
a hot-swappable, high-speed serial communications interface

**Hot-swappable**
a term used to describe that an external device can be plugged in or unplugged at any time

The **universal serial bus (USB)** port is becoming a very popular choice for high-speed serial communications interfaces. The reasons are simple:

- Almost all computer peripherals (mouse, printers, scanners, etc.) are now available in a USB version.
- The USB devices are **hot-swappable,** which means the external devices can be plugged in or unplugged at any time.
- USB devices are detected automatically once they are connected to the computer.
- The USB 2 supports a maximum data rate of 480 Mbps; USB 1.1 supports 12 Mbps.
- A total of 127 peripherals can be connected to one USB port.

The USB cable used to interconnect the peripheral to the computer consists of four wires inside a shielded jacket. The function of the four wires and their wire colors are listed in Table 6.

**Table 6** The USB Wire Colors and Functions

| Color | Function |
|---|---|
| Red | +5 V |
| Brown | Ground |
| Yellow | Data |
| Blue | Data |

Two types of connectors are used with USB ports and cables, **Type A** and **Type B.** They are shown in Figure 25. The Type A connector is the upstream connection that connects to the computer. The Type B connector is for the downstream connection to the peripheral.

**Type A Connector**
the USB upstream connection that connects to the computer

**Type B Connector**
the USB downstream connection to the peripheral

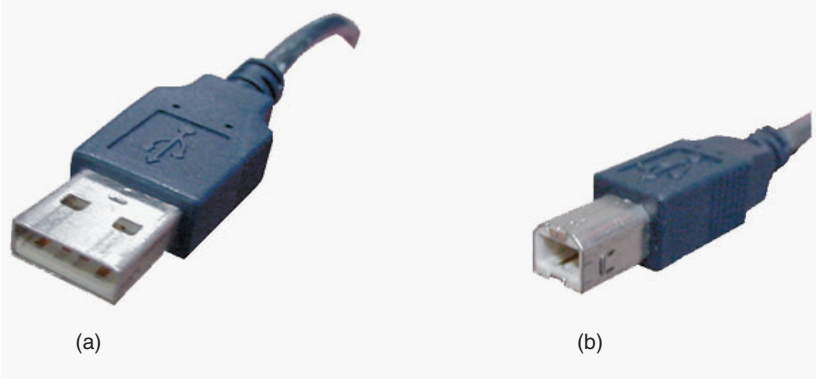


FIGURE 25 The USB Type A and Type B connectors.

An example of a USB connection using the MAX3451 transceiver is shown in Figure 26.

This diagram shows the MAX3451 being used to interface the peripheral device through the IC to the PC. The SPD input is used to select the data transfer rate of 1.5 Mbps (SPD = low) or 12 Mbps (SPD = +V). The D+ and D− pins are bidirectional bus connections. The OE pin is used to control the data flow. To transmit data from the peripheral to the USB side, bring OE low and SUS low. Receiving data requires OE to be high and SUS to be low. VP and VM terminals function as receiver outputs when OE is high (transmit mode) and duplicate D+ and D− when OE is low (receiver mode). The supply voltage range for the device is +1.65 V to +3.6 V.

## Firewire (IEEE 1394)

**Firewire A (IEEE 1394a)**
a high-speed serial connection that supports data transfers up to 400 Mbps

**Firewire B (IEEE 1394b)**
a high-speed serial connection that supports data transfers up to 800 Mbps

Firewire is another high-speed serial connection available for computers and peripherals. **Firewire A (IEEE 1394a)** supports data transfers up to 400 Mbps, while **Firewire B (IEEE 1394b)** supports 800 Mbps, data speeds in the gigabits are planned. The firewire cable uses a shielded twisted-pair cable with 3 pairs (6 wires).

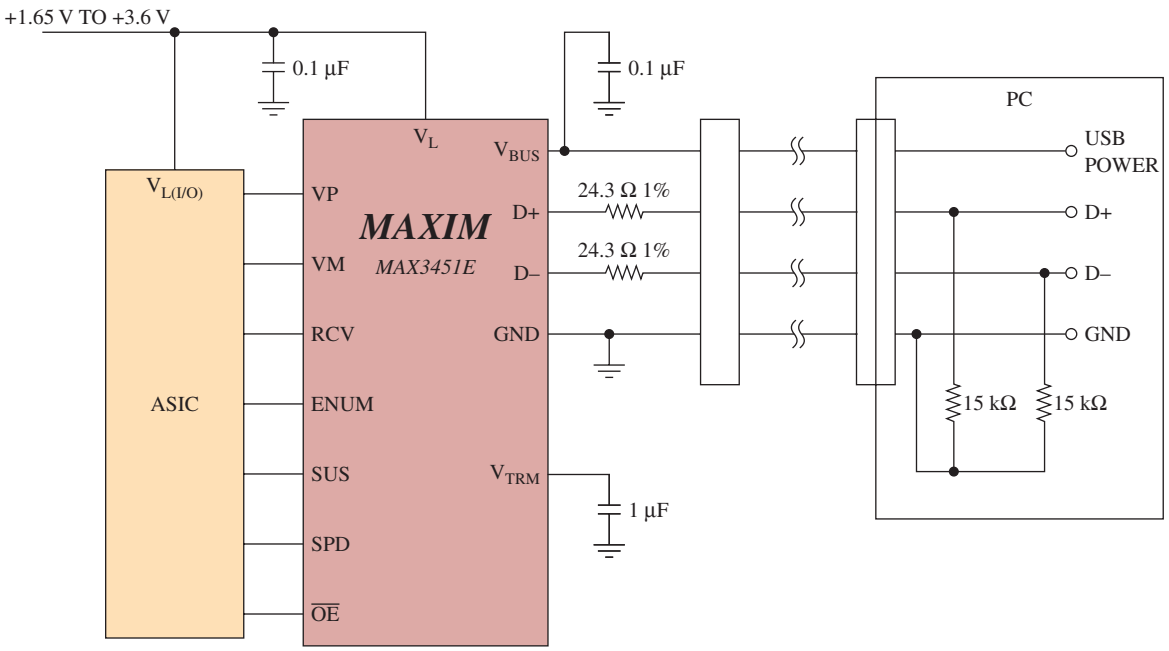


FIGURE 26 An example of using the MAX3451 transceiver for establishing a USB connection.

Two of the wire pairs are used for communication and the third is used for power. The pin assignments for the firewire connector are shown in Figure 27.

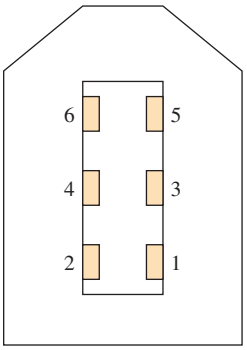


| *Pin* | *Description* |
|---|---|
| 1 | Power (unregulated, 10–12 V) |
| 2 | Ground |
| 3 | Twisted-pair B– |
| 4 | Twisted-pair B+ |
| 5 | Twisted-pair A– |
| 6 | Twisted-pair A+ |

FIGURE 27 The firewire connector and pin assignments.

## RS-232 Standard

**RS-232**
a standard of voltage levels, timing, and connector pin assignments for serial data transmission

Older serial data communications follow a standard called **RS-232,** or more correctly, RS-232 C. Usually everyone is referring to the "C" version of RS-232 because that is what is currently in use, but often the "C" is omitted. Be aware that even though we may refer to the standard as RS-232, we really mean RS-232 C. The RS-232 C standard is set by the Electronics Industry Association (EIA).

In addition to setting a standard of voltages, timing, etc., standard connectors have also been developed. This normally consists of what is called a DB-25 connector,

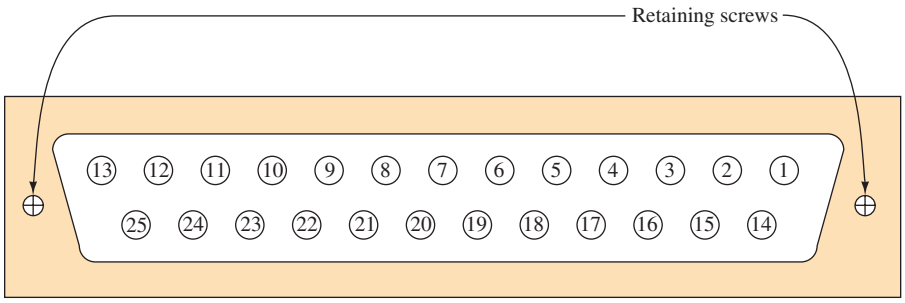


RS-232 "D-type" connector—front view.

| *Pin* | *Name* | *Abbreviation* |
|---|---|---|
| 1 | Frame ground | FG |
| 2 | Transmit data | TD |
| 3 | Receive data | RD |
| 4 | Request to send | RTS |
| 5 | Clear to send | CTS |
| 6 | Data set ready | DSR |
| 7 | Signal ground | SG |
| 8 | Data carrier detect | DCD |
| 20 | Data terminal ready | DTR |

Most popular pins implemented in RS-232 connections.

**FIGURE 28** DB-25 connector.

which is a connector with two rows of pins, arranged so that there are 13 in one row and 12 in the other. A diagram of this connector is provided in Figure 28.

It should be noted that even though the DB-25 connector is usually used, the actual RS-232 C standard specifications do not define the actual connector. In the last fifteen years or so, another connector has also been used for RS-232. This is the DB-9 connector, which has become a sort of quasi-standard for use on IBM compatible personal computers. See Figure 29 for a diagram of the DB-9 connector. You may ask, "How can 25 pins from a DB-25 connector all fit into the 9 pins of a DB-9 connector?" As we will see, all 25 pins of the DB-25 connector are not used, and, in fact, 9 pins are enough to do the job.

The original purpose of RS-232 was to provide a means of interfacing a computer with a modem. The computer in this case was likely a mainframe computer because personal computers, at least as we know them today, had not yet been developed. Modems were always external, so it was necessary that some means of connection between the modem and the computer be made. It would be even nicer if this connection would be made standard so that all computers, and all modems, could be connected interchangeably. This was the original purpose of RS-232. However, it has evolved into being many other things.

Today an RS-232 interface is used to interface a mouse to a personal computer, to interface a printer to a personal computer, and probably to interface about

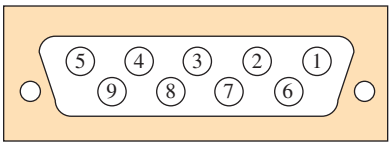


Front view

| Pin | | | |
|---|---|---|---|
| | 1 | DCD | (8) |
| | 2 | RD | (3) |
| | 3 | TD | (2) |
| | 4 | DTR | (20) |
| | 5 | SG | (7) |
| | 6 | DSR | (6) |
| | 7 | RTS | (4) |
| | 8 | CTS | (5) |
| | 9 | RI | (22) |

FIGURE 29 DB-9 connector.

as many other things as one can think of to a personal computer. In many cases, it is used to interface instrumentation to a PC. This means that the standard has evolved, and in the process of this evolution has changed in terms of the real world.

The standard did not define the connector but did define signal levels and different lines that could be used. The signal levels that are defined are very broad. The voltage levels are to be between 3 and 25 V. A minus voltage indicates a "1" and a plus voltage indicates a "0." Although the definition covers 3 to 25 V, the real signal levels are usually a nominal 12 to 15 V. Many chips available today will not respond to the 3-V levels, so from a real-world practical point of view, the signal level is between 5 and 15 V. This is still a very broad range and can obviously allow for a lot of loss in a cable.

In addition to the signal levels, the RS-232 standard specifies that the maximum distance for a cable is 50 ft, and the capacitance of the cable cannot exceed 2500 pF. In reality, it is the capacitance of the cable that limits the distance. In fact, distances that far exceed 50 ft are commonly used today for serial transmission.

The RS-232 standard also contains another interesting statement. It says that if any two pins are shorted together, the equipment should not be damaged. This obviously requires a good buffer. This buffering is normally provided. It should be noted that the standard says only that the equipment will not be damaged. It does not say that the equipment will work in that condition. In other words, if you short the pins on an RS-232 connector, there should be no smoke, but it might not work!

Perhaps the most important part of the standard from a technical point of view is that it defines the way the computer should "talk" to the modem; the timing involved, including the sequence of signals; and how each is to respond.

## RS-232 Line Descriptions

Now that we know a little about what RS-232 is designed to do, it is time to look at the actual signal lines involved and see what they do. As explained earlier, the DB-25 connector definition is not a part of the original standard, but because it has become a de facto standard, we will use it in our discussion. Refer to Figure 28 as a reference in this description. The complete signal description chart in Figure 30 will also be helpful.

| PIN NO. | EIA CKT. | CCITT CKT. | Signal description | Common abbrev. | From DCE | To DCE |
|---|---|---|---|---|---|---|
| 1 | AA | 101 | Protective (chassis) ground | GND | | |
| 2 | BA | 103 | Transmitted data | TD | | X |
| 3 | BB | 104 | Received data | RD | X | |
| 4 | CA | 105 | Request to send | RTS | | X |
| 5 | CB | 106 | Clear to send | CTS | X | |
| 6 | CC | 107 | Data set ready | DSR | X | |
| 7 | AB | 102 | Signal ground/common return | SG | X | X |
| 8 | CF | 109 | Received line signal detector | DCD | X | |
| 9 | | | Reserved | | | |
| 10 | | | Reserved | | | |
| 11 | | | Unassigned | | | |
| 12 | SCF | 122 | Secondary received line signal detector | | X | |
| 13 | SCB | 121 | Secondary clear to send | | X | |
| 14 | SBA | 118 | Secondary transmitted data | | | X |
| 15 | DB | 114 | Transmitter signal element timing (DCE) | | X | |
| 16 | SBB | 119 | Secondary received data | | X | |
| 17 | DD | 115 | Receiver signal element timing | | X | |
| 18 | | | Unassigned | | | |
| 19 | SCA | 120 | Secondary request to send | | | X |
| 20 | CD | 108/2 | Data terminal ready | DTR | | X |
| 21 | CG | 110 | Signal quality detector | SQ | X | |
| 22 | CE | 125 | Ring indicator | RI | X | |
| 23 | CH | 111 | Data signal rate selector (DTE) | | | X |
| 23 | CI | 112 | Data signal rate selector (DCE) | | X | |
| 24 | DA | 113 | Transmitter signal element timing (DTE) | | | X |
| 25 | | | Unassigned | | | |

FIGURE 30 Signal description for DB-25.

1. *Ground pins:* Actually, there are two ground pins in RS-232. They are not the same, however, and serve very different purposes.

   Pin 1 is the *protective ground* (GND). It is connected to the chassis ground and is there simply to make certain that no potential difference exists between the chassis of the computer and the chassis of the peripheral equipment. This is *not* the signal ground. The protective ground functions much the same as the third prong of a 115-V ac 3-prong outlet. The circuit will work without a connection to this pin, but the operator will also lose protection. In other words, make certain this pin is connected.

   Pin 7 is the *signal ground* (SG). This is the pin used for the ground return of all the other signal lines. Look at the location of the signal ground, pin 7. One of the problems often associated with RS-232 and especially DB-25 connectors is knowing if you are looking from the front or back and which end you should start counting from. Many connectors have the pin numbers printed on them, but this printing is usually so small that you cannot read it. Note that regardless of which end you count from, pin 7 always comes out in the same place!
2. *Data signal pins:* Data can be sent from both the computer and peripheral equipment. Therefore a bidirectional path is necessary.

   Pin 2 is *transmit data* (TD). In theory, this pin will contain the actual data flowing from the computer to the peripheral equipment.

Pin 3 is *receive data* (RD). In theory, this pin has the actual data flowing from the peripheral equipment to the computer. Note that it is the same as pin 2 listed previously, but in the opposite direction.

The problem is that theory and reality are not always the same. What if you want to link computers together? Which one is sending data, and which one is receiving data? It would seem that there should be an easy answer to this question, but such is not the case. Which end of the cable are you looking at? In this instance, when one is transmitting data, those same data become receive data to the other computer. What this really means is that it is not easy to define which is receive and which is transmit.

**Null Modem**
a wiring scheme that "tricks" an RS-232 device into believing a DCE device is connected

Because of this problem, what is usually called a **null modem** cable has been developed. It has pins 2 and 3 crisscrossed, i.e., pin 2 at one end is connected to pin 3 at the other end, and vice versa. Of course, this problem does not exist if we were to use RS-232 as originally intended, that is, for the computer to talk to a modem.

Another way of completing an RS-232 connection, a null modem connection, is shown in Figure 31. The RTS-CTS and DSR-DTR pins are connected together as shown. This tricks the RS-232 device into believing a DCE is connected and enables the TX and RX lines to function properly.

3. *Handshaking pins:* Pins 4 and 5 are used for handshaking or flow control. More correctly, pin 4 is called the *request to send* (RTS) pin, while pin 5 is the *clear to send* pin (CTS). These two lines work together to determine that everything is fine for data to flow. Originally, this was used to turn on the modem's carrier, but today it is more often used to check for buffer overflow. Almost all modern modems (and other serial devices) have some sort of buffer that is used when receiving and sending data. It would not be satisfactory for

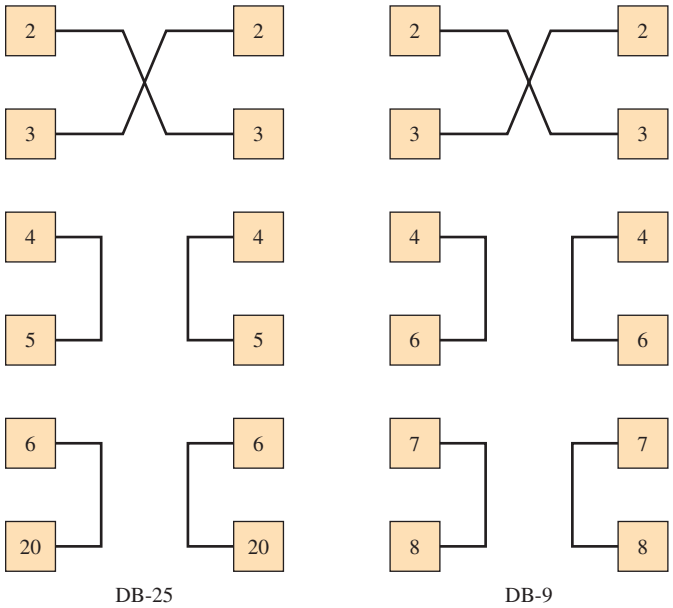


FIGURE 31 The RS-232 null modem connection.

that buffer to be sending more information than it could actually hold. Pins 4 and 5 may be used to handle this problem. It should be noted that if one computer is talking to another one via a null modem cable, these pins need to be crisscrossed just like pins 2 and 3.

In many cases, software flow control is used, and pins 4 and 5 do not serve any useful purpose at all. In this case, pins 4 and 5 need to be jumpered at the DB-25 connector. You may wonder why it would be necessary to jumper these pins if they are not actually used. This is because many serial ports will check these pins before they will send any data. Many serial interface cards are configured so that this signal is required for any data transfer to take place.

4. *Equipment ready pins:* Pins 6 and 20 are complementary pairs much as pins 4 and 5 are. Actually, pin 6 is called *data set ready* (DSR), while pin 20 is called *data terminal ready* (DTR). The original purpose of these pins was simply to make certain that the power of the external modem was turned on and that the modem was ready to go to work. In some instances, these pins were also used to indicate if the phone was off hook or on hook.

   Today, these pins may be used for any number of purposes, such as paper out indicators on printers. The two pins work together and normally should be jumpered on the DB-25 connector like pins 4 and 5 if their use is not expected.

   It should be noted that, up to this point, the complementary pairs of pins have been adjacent to one another. Obviously, pins 6 and 20 are not in consecutive order. An inspection of the DB-25 connector will reveal, however, that pins 6 and 20 are almost directly above and below each other in their respective rows.

5. *Signal detect pin:* Pin 8 is usually called the *data carrier detect* (DCD) or sometimes simply the *carrier detect* (CD) line. In an actual modem, it is used to indicate that a carrier (or signal) is present. It may also indicate that the signal-to-noise ratio is such that data transmission may take place.

   Many computer interface cards require that this signal be present before they will communicate. If the RS-232 connection is not a modem requiring this signal, it is often tied together with pins 6 and 20 (DSR and DTR). As has been the case with other pins, this pin is probably not used for its original purpose. What it really is used for is highly dependent on the device in use.

6. *Ring indicator pin:* Pin 22 is known as the *ring indicator* (RI). Its original purpose was to do just what its name indicates—to let the computer know when the phone was ringing. Most modems are equipped with automatic answer capabilities. Obviously, the modem needed to tell the computer that someone with data to send was calling!

   Pin 22 is forced true only when the ringing voltage is present. This means that this signal will go on and off in rhythm with the actual telephone ring. As is true with other signals, this pin may not be used. Often it is tied together with pins 6, 20, and 8. In other cases, it is simply ignored. Again, the actual use of this pin today will vary widely with the equipment connected.

7. *Other pins:* Up to this point, we have discussed the 10 pins used most often. In reality, the chassis ground is usually accomplished by grounding each piece of equipment separately and is not necessary with battery-powered computer

equipment. These considerations have led to the 9-pin connector usage shown in Figure 29. When the DB-25 connector is used, the remaining pins are occasionally used for special situations, as warranted by the equipment connected.

It should be noted that the terms *computer, modem,* and *peripheral equipment* have been used in the discussion thus far. Two more technically correct terms may be used in literature, texts, and diagrams. The term **data terminal equipment** (DTE) is used to indicate a computer, computer terminal, personal computer, etc. The term **data communications equipment** (DCE) is used to indicate the peripheral equipment (such as the modem, printer, mouse, etc.). Notice that the DCE label is used in Figure 30.

**Data Terminal Equipment**
refers to a computer, terminal, personal computer, etc.

**Data Communications Equipment**
refers to peripheral computer equipment such as a modem, printer, mouse, etc.

Many communication standards available on today's computers complement the use of RS-232. Table 7 provides a brief overview of many of the standards currently being used.

**Table 7** Overview of Current Serial Computer Communication Standards

| | |
|---|---|
| RS-232 | The common serial data connection for computer modems and the mouse interface. |
| RS-422 | A balanced serial communications link that can support data speeds up to 10 Mbps at a distance of 4000 ft. |
| RS-449 | Intended as a replacement for the RS-232 standard, but the two standards are not completely compatible either mechanically or electrically. Data speeds are from 9600 bps to 10 Mbps, and they depend on the length and type of cable used. |
| RS-485 | A balanced differential output that allows multiple data connections. Data speeds of 30 Mbps are supported. |
| RS-530 | A standard replacing RS-449 and also complementing the RS-232 standard. This standard will also interface the balanced systems RS-422 and 423. |

*Source:* www.blackbox.com

## RS-422, RS-485

The RS-232 output is a single-ended signal, which means that a signal line and a ground line are used to carry the data. This type of arrangement can be susceptible to noise and ground bounce. The **RS-422** and **RS-485** use a differential technique that provides a significant improvement in performance and thus yields greater distances and the capacity to support higher data rates. In a differential technique, the signals on the wires are set up for a high (+) and low (−) signal line. The (+) indicates that the phase relationship of the signal on the wire is positive and the (−) indicates that the phase of the signal on the wire is negative; both signals are relative to a virtual ground. This is called a **balanced mode** of operation. In a balanced mode of operation, the balanced operation of the two wire pairs helps to maintain the required level of performance in terms of crosstalk and noise rejection.

**RS-422, RS-485**
balanced mode serial communications standards that support multidrop applications

**Balanced Mode**
neither wire in the wire pairs connects to ground

RS-422 and RS-485 also support multidrop applications, which means that the standard supports multiple drivers and receivers connected to the same data line. RS-422 is not a true multidrop network because it can drive ten receivers but only

allows one transmitter to be connected. RS-422 supports a data rate of 10 Mbps over a distance of 4000 feet. The RS-485 standard allows a true multiport connection. The standard supports 32 drivers and 32 receivers on a single two-wire bus. It supports data rates up to 30 Mbps over a distance of 4000 feet.

Computer interface cards are available that provide the functions for virtually any communications test set or gear. For example, spectrum analyzers and data and protocol analyzer interface cards are available on a PC interface card. Table 8 outlines some of the common computer bus interfaces available today. This information is helpful for the user in specifying the proper bus or an interface card for a computer. This list is not complete but it does provide some of the more common computer bus interfaces.

**Table 8** Standard Computer Bus Interfaces

| | |
|---|---|
| PCI (Peripheral Component Interconnect) | PCI is the best bus choice for current computers. PCI supports 32- and 64-bit implementations. |
| ISA (Industry Standard Architecture) | Allows for 16-bit data transfers between the motherboard and the expansion board. |
| EISA (Extended Industry Standard Architecture) | EISA extends the ISA bus to 32-bit data transfers. |
| MCA (Micro Channel Architecture) | |
| VLB [VESA (Video Electronics Standards Association) Local Bus] | Supports 32-bit data transfers at 50 MHz. |
| USB (Universal Serial Bus) | Does not require that the computer be turned off or rebooted to activate the connection. Supports data rates up to 12 Mbps. Two type of USB connectors are shown in Figures 25(a) and (b). |
| IEEE 1394 (Firewire, i-Link) | A high-speed, low-cost interconnection standard that supports data speeds of 100 to 400 Mbps (see Figure 27). |
| SCSI (Small Computer System Interface) | Consists of an SCSI host adapter; SCSI devices such as hard drives; DVD; CD-ROM; and internal or external SCSI cables, terminators, and adapters. SCSI technology supports data transfer speeds up to 160 Mbps. |
| IDE (Integrated Drive Electronics) | Standard electronic interface between the computer's motherboard and storage devices such as hard drives. The data transfer speeds are slower than SCSI. |
| AGP (Accelerated Graphics Port) | Used in high-speed 3D graphics applications. |

## Facsimile

**Facsimile** is the process whereby fixed graphic material such as pictures, drawings, or written material is scanned and converted to an electrical signal, transmitted, and after reception used to produce a likeness (facsimile) of the subject copy. It is roughly comparable to the transmission of a single TV frame except the output is reproduced on paper rather than on the face of a CRT. Facsimile has been used

**Facsimile**
system of transmitting images in which the image is scanned at the transmitter, reconstructed at the receiving end, and duplicated on paper

for years for the rapid transmission of photos to local newspapers by news services (e.g., AP Wirephoto) and aboard ships for reception of up-to-date weather charts or maps.

**Fax**
abbreviation for facsimile

In recent years facsimile **(fax)** equipment has been designed to appeal to the industrial world. This equipment generally uses standard telephone lines as the communications link. This enables industry to send important business papers rapidly across town or around the world. As the cost and problems concerned with standard mail delivery escalate, it is not far-fetched to envision facsimile postal service.

A facsimile unit is shown in Figure 32. The copy to be transmitted is scanned by a laser light source. Light reflected from the light and dark elements on each page is gathered by a solid-state photoreceptor. This signal is then used to frequency-modulate a low-frequency carrier before it is applied to the phone line by using a modem.

Standard phone lines have a very limited bandwidth of less than 3 kHz. Recall Hartley's law, which states that the information transmitted is proportional to bandwidth times the time of transmission. Today's fax machines use *compression* techniques to shorten document transmission time. The receiver is programmed to reverse the data compression scheme. The basic compression technique uses the




FIGURE 32 Facsimile unit. (Photo courtesy of Sharp Electronics Corporation.)

concept that documents often contain a large amount of blank (white) area. The fax transmits information that indicates how many consecutive "white" areas occur in the scanned line, thereby greatly reducing the time for transmission. This involves usage of computer memory at both transmitter and receiver. More advanced (faster) fax machines rely on the fact that adjacent scan lines are usually very similar. These machines transmit the difference between one line and the next to reduce transmission time even further.



## 8 TROUBLESHOOTING

Telemetry systems have become big business in recent years. In addition to the military applications, many commercial uses are being developed. Today's telemetry market ranges from remote reading of gas and electric meters to credit-card validation, security monitoring, token-free highway toll systems, and remote inventory control.

After completing this section you should be able to

- troubleshoot a radio-telemetry receiver
- troubleshoot a radio-telemetry transmitter

### Receiver Problems

Let's start by looking at some possible receiver problems in Figure 33. Because this receiver has a low-frequency IF amplifier, an oscilloscope can be used to check signal levels and adjust the tuned circuits. However, a typical oscilloscope probe presents a capacitive load to the circuit you connect it to. The best probe for this work will be an X10 type. These probes divide the signal to the oscilloscope by 10 but shunt the circuit under test with only 8 to 10 pF, whereas an X1 probe would have a shunt capacitance of 100 pF. Sometimes even 10 pF is significant, but it is usually not a problem if you are aware of the effect.

***No Output*** Assume you know that a good transmitted signal is present. Check the easy items first: battery or power supply and the antenna connections. Refer to Figure 33 in this discussion.

1. Disconnect the receiver from the decoder. It is possible the decoder is shorted, therefore killing the receiver.
2. Check the local oscillator. You can check the LO signal at pin 2 with an oscilloscope by using the low-capacitance probe. If you don't have one, just use a small capacitor, 10 pF or less, in series with your probe. The capacitor forms a voltage divider with the probe capacitance. If the capacitance of the added capacitor is small compared to that of the probe, the loss is approximately the ratio of the capacitances.

   If the oscillator is not running, try adjusting the inductor, L1. After the oscillator runs, you should be able to find a peak amplitude followed by a point where it quits. Adjust the coil away from the quitting point and just below the output peak.

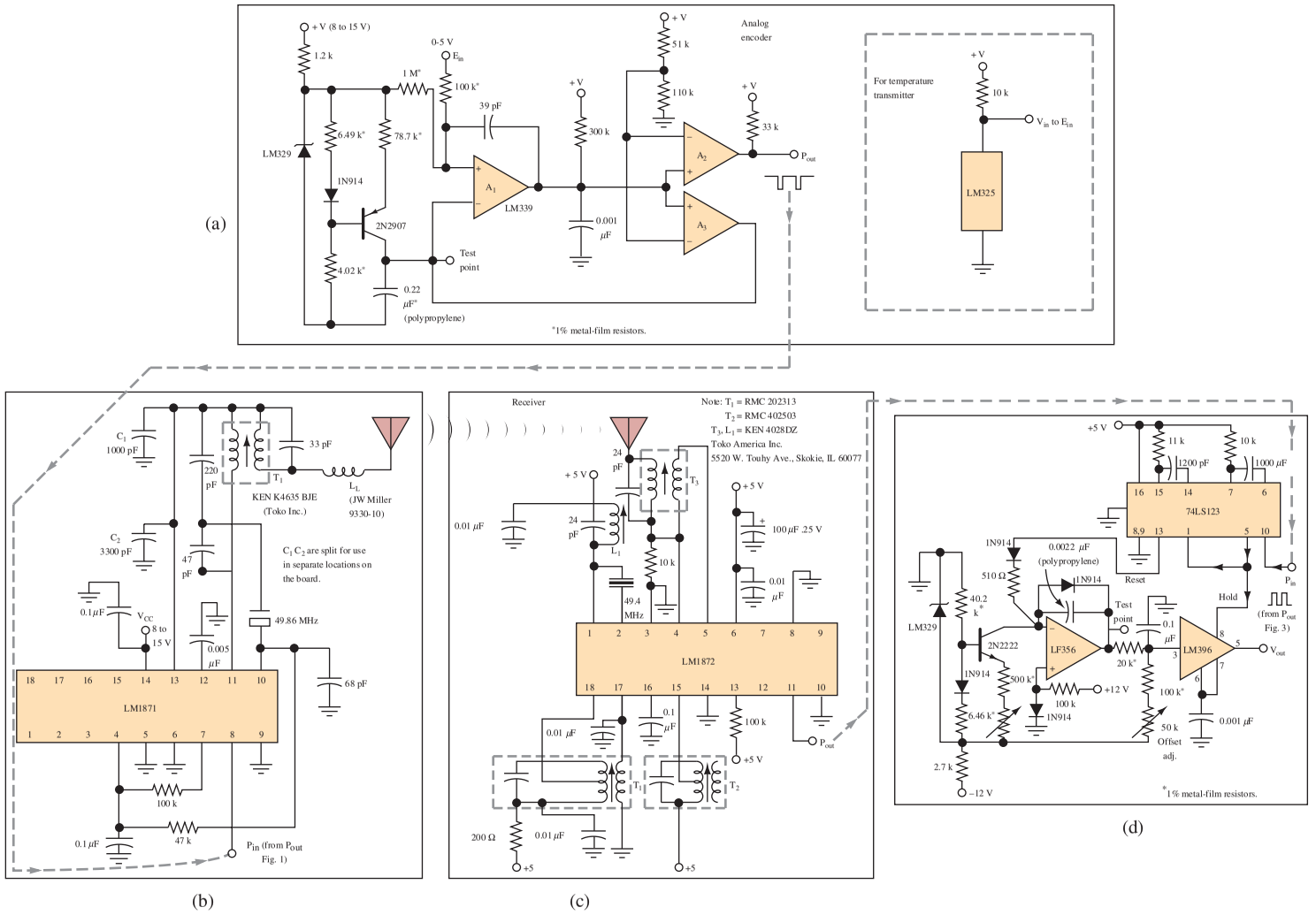


FIGURE 33 Complete radio-telemetry system: (a) encoder, (b) transmitter, (c) receiver, (d) decoder. (Reprinted with permission from *Electronic Design*, Vol. 29, No. 10; copyright Hayden Publishing Co., Inc.)

If adjustment is fruitless, check the crystal or substitute another. Don't forget the inductor and its tuning capacitor. Integrated circuits are usually more reliable than the rest of the parts and harder to unsolder.

3. Check for signal in the IF amplifier stages. You have no way to adjust the oscillator frequency, so the IF must be aligned to the transmitter's frequency. The manufacturer recommends killing the AGC by grounding pin 16. The secondary of T3 is a good test point because it isolates the IF amplifier from the oscilloscope probe. The signal amplitude will be down by a factor of 8 according to the data sheet, but we are looking only for a peak. Adjust T1, T2, and T3 for maximum output. After some signal is obtained, you may find that one coil will not tune properly. Check the inductance and its associated capacitor.

## Transmitter Problems

In this case, you will need some means of monitoring the transmitter's RF output without actually making a physical connection to the transmitter. A spectrum analyzer is efficient, but almost any receiver capable of operating on the proper frequency will do.

1. No output: Check for modulation at the input, pin 8, and at the internal modulator's output, pin 13. The modulator simply turns the oscillator's power supply on and off. The off-on rate will be in the low audio frequency region. If these are present and there is no RF output, it's time to check the crystal and the tuned circuits.
2. Low output: This can be caused by low modulator output. Check the modulation voltage peak amplitude at pin 13. For the LM1871, you should have 4.5 V.

Monitor the signal strength with a receiver or the spectrum analyzer while adjusting the oscillator transformer, T1. Look for a definite peak. If none can be found, check the associated 220-pF and 47-pF capacitors.

## Encoder/Decoder Problems

The current source is the heart of both the encoder and the decoder. Both circuits also depend on a high-quality capacitor to integrate the current provided by the current source.

First, a short discussion of the current source is necessary. The LM329 is an active 6.9-V reference. This voltage is divided by the 6.49- and the 4.02-kΩ resistors to provide a fixed base–emitter voltage on the 2N2907. Because this voltage is fixed, the voltage across the emitter resistor is fixed. Therefore, the collector current is constant. Now, let's look at some typical problems.

1. Assume the 2N2907 has a base-to-collector short. Now the current is only limited by the emitter resistor. The capacitor will charge rapidly. Therefore, a lower signal voltage will cause the comparator (A1) to trip at a lower voltage, and the gain will appear to be too high. Because the voltage across the capacitor is no longer linear, the system output will also be nonlinear.

2. Assume the integrating capacitor has developed a high-resistance leak. Now part of the current is not building charge on the capacitor. The gain will appear to be lower and some nonlinearity may appear. This applies to both the encoder and decoder.
3. Assume a failure of the 74LS123 in the decoder. It must provide the proper logic levels to reset the integrator and trigger the sample-and-hold IC. Incorrect logic levels result in no output.
4. Assume the sample-and-hold capacitor (0.001 $\mu$F) has developed a leak. The operational amplifier may have enough drive to charge the capacitor, but voltage will immediately begin to fall. Looking at the output with an oscilloscope, you will see a sawtooth waveform, and the output voltage will be too low.



## 9 TROUBLESHOOTING WITH ELECTRONICS WORKBENCH™ MULTISIM

In this section, we examine a circuit used to detect a unique binary data sequence. This circuit is called a *sequence detector*. Once the unique binary sequence is detected, an output signal is triggered. Circuits such as this one are often used in communications to detect the beginning of a serial data stream. These type of circuits are frequently discussed in digital design textbooks, and you are encouraged to refer to these texts for the steps to implement sequence detectors.

This section examines the method for testing the sample sequence generator shown in Figure 34. This circuit has been designed to detect a sequence of

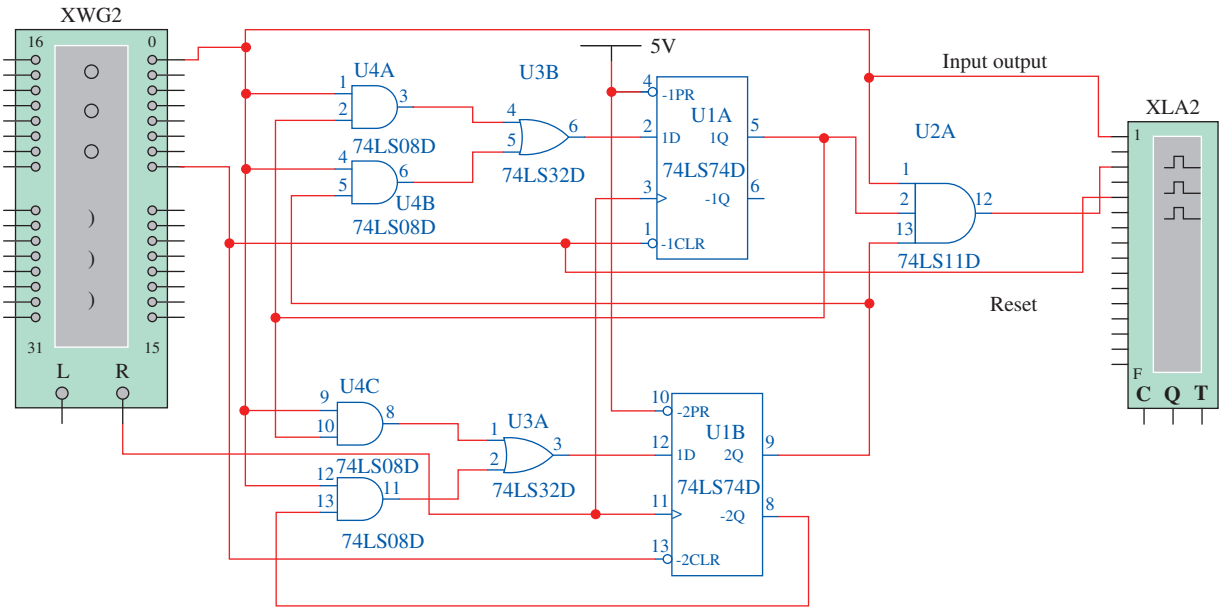


FIGURE 34 A "1 1 1" sequence detector circuit as implemented in Electronics Workbench™ Multisim.

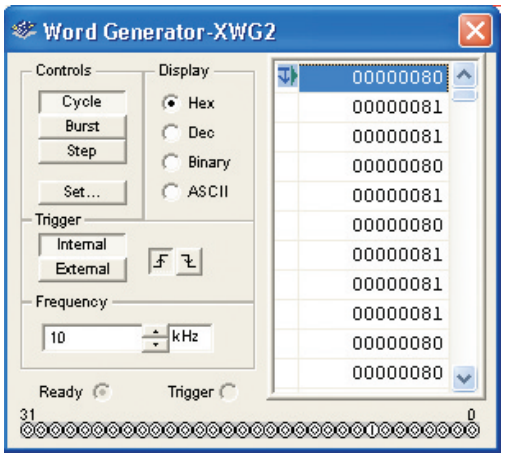


FIGURE 35 The control panel for the Multisim word generator.

three consecutive 1s (1 1 1). The objective of this section is to demonstrate how to test the sequence detector circuit using the Multisim Word Generator and Logic Analyzer.

To begin, open the Multisim file **Fig9-34** at www.pearsoned.com/electronics. The circuit should look similar to Figure 34 except the word generator is labeled XWG2 and the logic analyzer is labeled XLA2. Double-click on the word generator to open its control panel. An example of the window displayed is provided in Figure 35. The Multisim word generator provides for 32-bit words to be programmed into the generator. Over 16,000 32-bit numbers can be entered. In this case we will be using only the first data bit (D0) for the simulation of a serial data stream so the entries shown will have data values only in the D0 position. The data values displayed are in hexadecimal. The $80_H$ translates to 1000000 in binary. The $81_H$ translates to 10000001.

There are several options for running the simulation. The option selected in Figure 35 is the cycle. This mode will run the simulation through the entire set of more than 16,000 data values. Another useful option is the step. In this mode, the simulation will proceed one clock cycle at a time. In this mode, clicking on the Multisim pause button will let the simulation proceed for one more clock cycle.

Double-click on the logic analyzer icon to display the selected traces from the sequence detector. Start the simulation and let the simulation fill the logic analyzer's screen. You should see an image similar to that shown in Figure 36. You should also see the input data, the output, the reset pulse, and the internal clock (clock). The traces have been relabeled in Figure 36.

Notice that the sequence detector has detected the presence of two occurrences of three consecutive 1s. Careful examination of the word generator file shows that three consecutive 1s appear beginning at 0006–0008 and again at 000E–0010. This is shown in Figure 37.

This exercise has demonstrated how to use the Multisim word generator and the logic analyzer for examining the traces from a sequence detector circuit. The following Electronic Workbench™ Multisim exercises will also investigate your understanding of the material presented in this section.

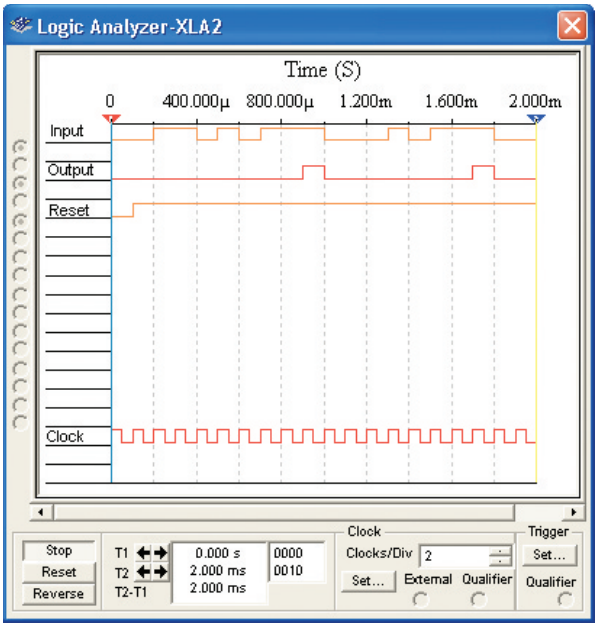


FIGURE 36 The simulation results as displayed by the Multisim logic analyzer.

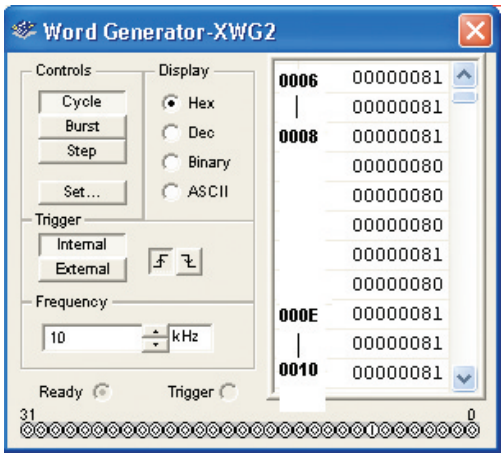


FIGURE 37 The two sets of three consecutive 1s in the Multisim simulation.

## Electronic Workbench™ Exercises

1. Open the Multisim file **Fig9-34** at www.pearsoned.com/electronics and determine if another sequence of three consecutive 1s appears in the simulation. (data sequence 0025–0027)
2. Open the Multisim file **FigE9-1** and determine if the circuit is working properly. If it is not, determine which circuit has a fault. Correct the fault and verify that the circuit is working properly.

3. Open the Multisim file **FigE9-2** and determine if the circuit is working properly. If it is not, find and correct the fault.



## Summary

In this chapter we examined various aspects of wired digital communications, including bandwidth issues, TDMA, delta and pulse modulation, and computer communication. The major topics you should now understand include the following:

- the concepts of error probability and bit error rate
- the basic concept of establishing a data link and the associated protocol
- the bandwidth issues in wired digital communications
- the fundamentals of TDMA
- the techniques used in delta and pulse modulation
- the fundamentals of data transmission, including T1, T3, packet switching, frame relay, and ATM
- computer serial communications, facsimile, and computer bus standards



## Questions and Problems

### Section 1

1. Explain what is meant by a baseband transmission.
2. Which transmission scheme of the six shown in Figure 1 is used by a broadcast FM radio station?
3. Provide some possible reasons why an analog signal is digitized when an analog output is desired. A block diagram of such a system is shown in Figure 1(f).
4. How are analog signals converted to digital?

### Section 2

5. In what ways is coded voice transmission advantageous over direct transmission? What are some possible disadvantages?
6. Define *coding* and *bit*.
7. Sketch a voltage waveform that could be used to represent the binary number 11010100100.
8. Explain the noise immunity advantages of the binary code over any other code.
9. Calculate the error probability in a system that produces 7 error bits out of 5,700,000 total bits. ($1.23 \times 10^{-6}$)
10. How many bits are required to obtain an efficiency of 90 percent if 4 bits are used? (3.6)
11. The transmit power for a digital communications device is 1 W. The data rate is 28.8 kbps. Determine the energy per bit. (34.7 $\mu$J)
12. Describe the differences between an asynchronous and a synchronous communications channel. Provide examples for each.
13. Describe the purpose of a communication protocol.



## Section 3

14. Calculate the channel capacity (bits per second) of a standard phone line that has an *S/N* of 511. (27 kbps)
15. A 56-kbps NRZ-L encoded data stream is used in a digital communications link. Determine the minimum bandwidth required for the communications link. (28 kHz)

## Section 4

16. List the data rates for the T and DS carriers.
17. How many telephone calls can be carried over a T1 line? How is the total of 1.544 Mbps obtained for a T1 line?
18. Define *fractional T1.*
19. Define *point of presence.*
20. What is the purpose of a CSU/DSU?
21. Describe how packet switching works. What is statistical concentration?
22. Explain the operation of a frame relay network. What technique does it use to increase data throughput and why is this a viable approach?
23. What is ATM and how are data moved quickly with this technique?

## Section 5

24. Describe the TDMA technique for transmitting data over a serial communications channel.
25. What is the purpose of guard time and why is it necessary to provide this in a TDMA system?
26. Draw a block diagram of a TDMA system. Are there any special requirements for the multiplexing frequency? Describe what is required.

## Section 6

27. Explain the process of delta modulation.
28. Provide a detailed explanation of the delta modulator shown in Figure 12.
29. Explain how slope overload occurs in DM and how the CVSD feature helps to overcome it.
30. Compare CVSD to companding.
31. List two advantages of pulse modulation and explain their significance.
32. With a sketch similar to Figure 14, explain the basics of PAM, PWM, and PPM.
33. Describe a means of generating and detecting PWM.
34. Describe a means of generating and detecting PPM.
35. Draw a diagram showing demodulation of a PWM signal.
36. Define *continuous-wave transmission.* In what ways is this an appropriate name?
37. Explain the AGC difficulties encountered in the reception of CW. What is two-tone modulation, and how does it remedy the receiver AGCC problem of CW?
38. Calculate all possible transmitted frequencies for a two-tone modulation system using a 21-MHZ carrier with 300- and 700-Hz modulating signals to represent mark and space. Calculate the channel bandwidth required.

## Section 7

39. Describe the origin of the RS-232 C standard and discuss its current status as a standard.
40. What are the USB wire functions and colors?
41. The USB Type A connector is used for upstream or downstream connection?
42. What is handshaking?
43. What data rates do USB and firewire support?
44. Describe the difference in USB Type A and B connectors.

## Questions for Critical Thinking

45. Explain the difference between committed information rate and committed burst information rate.
46. Describe the three CSU/DSU alarms and three loopback tests for a CSU/DSU. Why are loopback tests important?



*This page intentionally left blank*

# WIRELESS DIGITAL COMMUNICATIONS

From *Modern Electronic Communication*, Ninth Edition, Jeffrey S. Beasley, Gary M. Miller. Copyright © 2008 by Pearson Education, Inc. Published by Prentice Hall. All rights reserved.

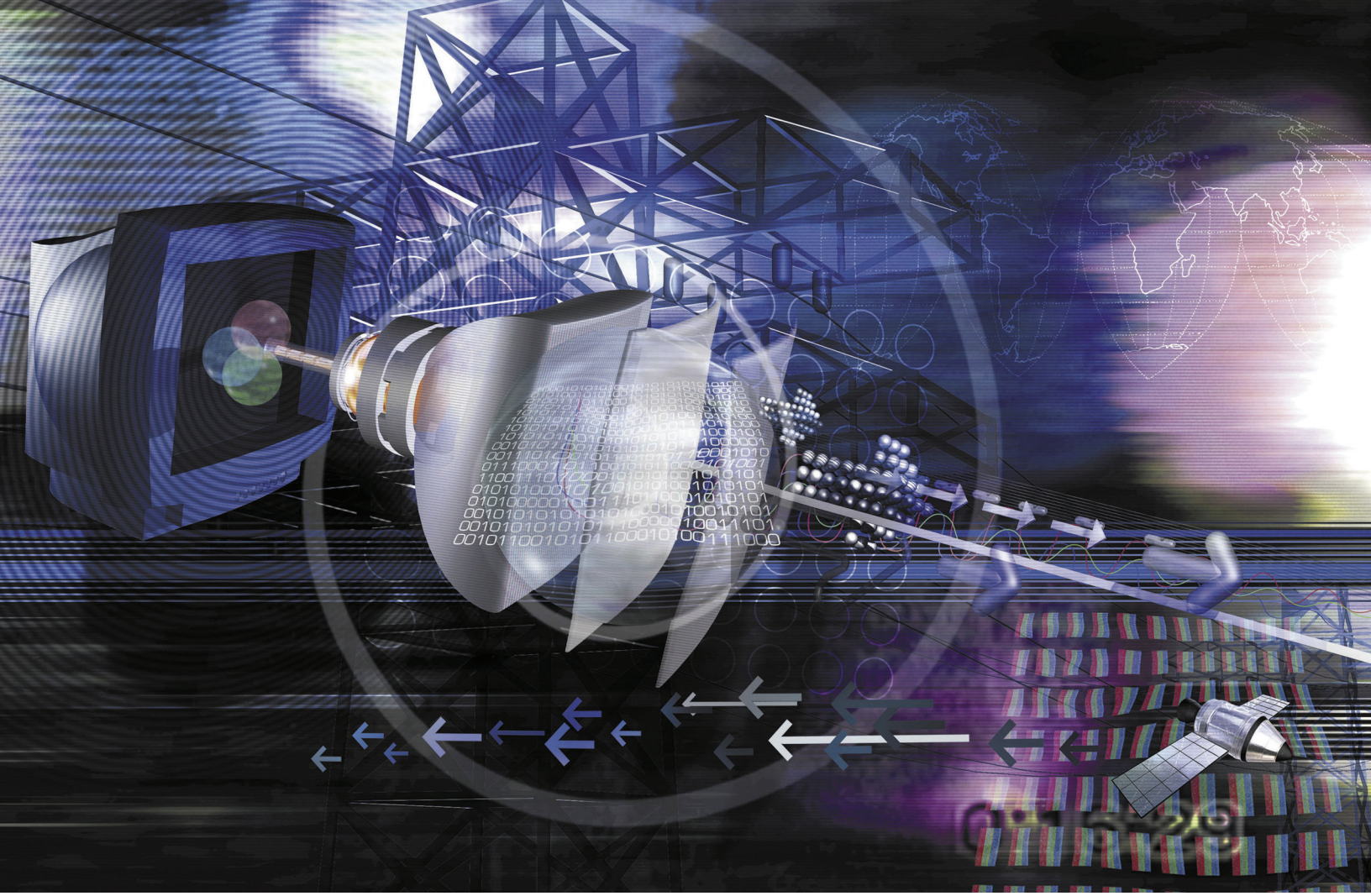

## Chapter Outline

1 Introduction
2 Digital Modulation Techniques
3 Spread-Spectrum Techniques
4 Orthogonal Frequency Division Multiplexing (OFDM)
5 Telemetry
6 Troubleshooting
7 Troubleshooting with Electronics Workbench™ Multisim

## Objectives

- Describe the basics of a wireless digital communications link
- Provide detail on the various schemes used to transmit digital signals, including FSK, PSK, BPSK, QPSK, DPSK, and QAM
- Describe the generation of eye patterns and explain their use
- Describe the OFDM technique and explain why it is used
- Detail the operation of a complete radio-telemetry system
- Understand the basic steps for troubleshooting cell phone problems

# WIRELESS DIGITAL COMMUNICATIONS

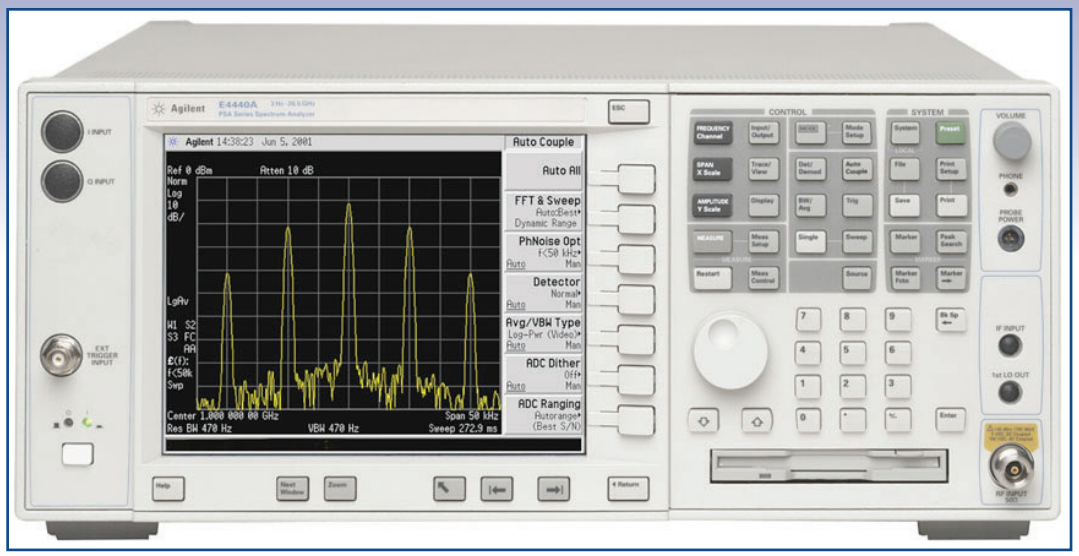


The Agilent E4440A PSA Series Spectrum Analyzer. (© Agilent Technologies, Inc. 2007 Reproduced with Permission, Courtesy of Agilent Technologies, Inc.)

## Key Terms

wireless digital communications
wireless
frequency shift keying
phase shift keying
data bandwidth compression
quadrature amplitude modulation
constellation pattern
loopback
eye patterns
pseudonoise (PN) codes
spread
PN sequence length
maximal length
frequency hopping spread spectrum
dwell time
DSSS
chips
code division multiple access (CDMA)
multiple access
hit
signature sequence
despread
orthogonal frequency division multiplexing (OFDM)
multitone modulation
orthogonal
cyclic prefix
HD radio
in-band on-channel (IBOC)
hybrid AM, FM
COFDM
flash OFDM
telemetry
radio telemetry
water mark sticker
preferred roaming list (PRL)
OTA
RF shield box

## 1 INTRODUCTION

**Wireless Digital Communications**
the transport of digital data over a wireless medium

**Wireless**
the term used today to describe telecommunications technology that uses radio waves, rather than cables, to carry the signal

This chapter focuses on the physical layer technologies used in **wireless digital communications.** This area of communications has evolved rapidly over the past ten years, and it is safe to say that the evolution is just beginning. The term **wireless** is used today to describe telecommunications technologies that use radio waves, rather than cables, to carry the signal. Examples of wireless digital equipment and systems used today include cellular phones, wireless networking, cordless devices (for example, Bluetooth), digital television, satellite TV, satellite radio, global positioning systems (GPSs), pagers, garage door openers, and telemetry systems. Wireless is not new; various techniques have been used for many years to transport both analog and digital signals over radio waves. In fact, digital data has been transported over wireless systems for many years, but the recent evolution of wireless digital services (for example, personal communication services [PCS], third-generation [3G] services, and mobile Internet) is behind the wireless explosion. The objective of this chapter is to present the communications techniques used to transport digital data over wireless networks.

Wireless technologies can be divided into the following three groups:

1. Fixed wireless: both transmit and receive units are at fixed locations (for example, wireless local area networks [LANs]).
2. Mobile wireless: the transmit and/or receive units are moving (for example, cellular and PCS phones).
3. Infrared (IR) wireless: the transmit and receive units use infrared light sources and detectors to provide the communications link (for example, building-to-building communications links)

The basic digital modulation techniques used in wireless communications are first examined in Section 2. These techniques include frequency-shift keying, phase-shift keying, BPSK, QPSK, and QAM. Spread-spectrum techniques are introduced in Section 3, which thoroughly explains CDMA and how spread-spectrum communication works. The section also includes a demonstration of the spreading and despreading of the BPSK signal using the Electronics Workbench™ Multisim software.

Orthogonal frequency division multiplexing (OFDM) and the technique used to create an OFDM signal are examined in Section 4. An overview of flash OFDM is presented in the same section, which also reviews the spread-spectrum version of OFDM. Radio telemetry is examined in Section 5. The techniques of remote metering are introduced to give you an overview of how the data is gathered remotely.

A section on troubleshooting cell phone problems is provided in Section 6. The basic troubleshooting steps are examined, as is an example of running full diagnostics of a cell phone using a CDMA test set. The chapter concludes with the use of Electronics Workbench™ Multisim to simulate a BPSK transmit-receive circuit.

## 2 DIGITAL MODULATION TECHNIQUES

The transmission of digital data via frequency modulation (FM) or phase modulation (PM) offers some of the same advantages over amplitude modulation that occur in standard analog systems. In this section we'll examine the common FM/PM schemes used to transmit digital data. Keep in mind that these schemes are used for transmission of any type of binary code.

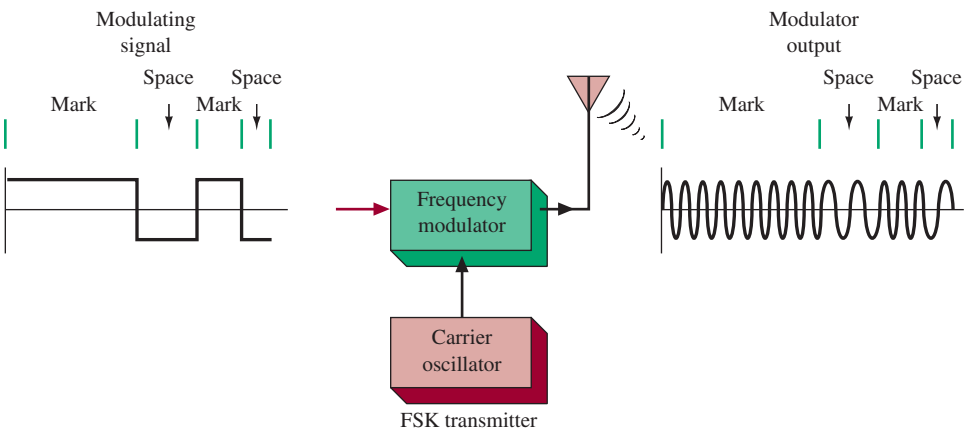


FIGURE 1 FSK transmitter.

## Frequency Shift Keying

**Frequency shift keying** (FSK) is a form of frequency modulation in which the modulating wave shifts the output between two predetermined frequencies—usually termed the mark and space frequencies. It may be considered as an FM system in which the carrier frequency is midway between the mark and space frequencies and is modulated by a rectangular wave, as shown in Figure 1. The mark condition causes the carrier frequency to increase by 42.5 Hz, while the space condition results in a 42.5-Hz downward shift. Thus, the transmitter frequency is constantly changing by 85 Hz as it is keyed. This 85-Hz shift is the standard for narrowband FSK, while an 850-Hz shift is the standard for wideband FSK systems.

**Frequency Shift Keying**
a form of data transmission in which the modulating wave shifts the output between two predetermined frequencies

### Example 1

*Determine the channel bandwidth required for the narrowband and wideband FSK systems.*

#### Solution

The fact that narrowband FSK shifts a total of 85 Hz does not mean the bandwidth is 85 Hz. While shifting 85 Hz, it creates an infinite number of sidebands, with the extent of significant sidebands determined by the modulation in the Example.

In practice, most narrowband FSK systems utilize a channel of several kilohertz, while wideband FSK uses 10 to 20 kHz. Because of the narrow bandwidths involved, FSK systems offer only slightly improved noise performance over the AM two-tone modulation scheme. However, the greater number of sidebands transmitted in FSK allows better ionospheric fading characteristics than do two-tone AM modulation schemes.

## FSK Generation

The generation of FSK can be accomplished easily by switching an additional capacitor into the tank circuit of an oscillator when the transmitter is keyed. In narrowband FSK it is often possible to get the required frequency shift by shunting the capacitance directly across a crystal, especially if frequency multipliers follow the oscillator, as is usually the case. FSK can also be generated by applying the rectangular wave modulating signal to a voltage-controlled oscillator (VCO). Such a system is shown in Figure 2. The VCO output is the desired FSK signal, which is then transmitted to an FM receiver. The receiver is a standard unit up through the IF amps. At that point a 565 phase-locked loop (PLL) is used for detecting the original modulating signal. As the IF output signal appears at the PLL input, the loop locks to the input frequency and tracks it between the two frequencies with a corresponding dc shift at its output, pin 7. The loop filter capacitor $C_2$ is chosen to set the proper overshoot on the output, and the three-stage ladder filter is used to remove the sum frequency component. The PLL output signal is a rounded-off version of the original binary modulating signal and is therefore applied to the comparator circuit (the 5710 in Figure 2) to make it logic compatible.

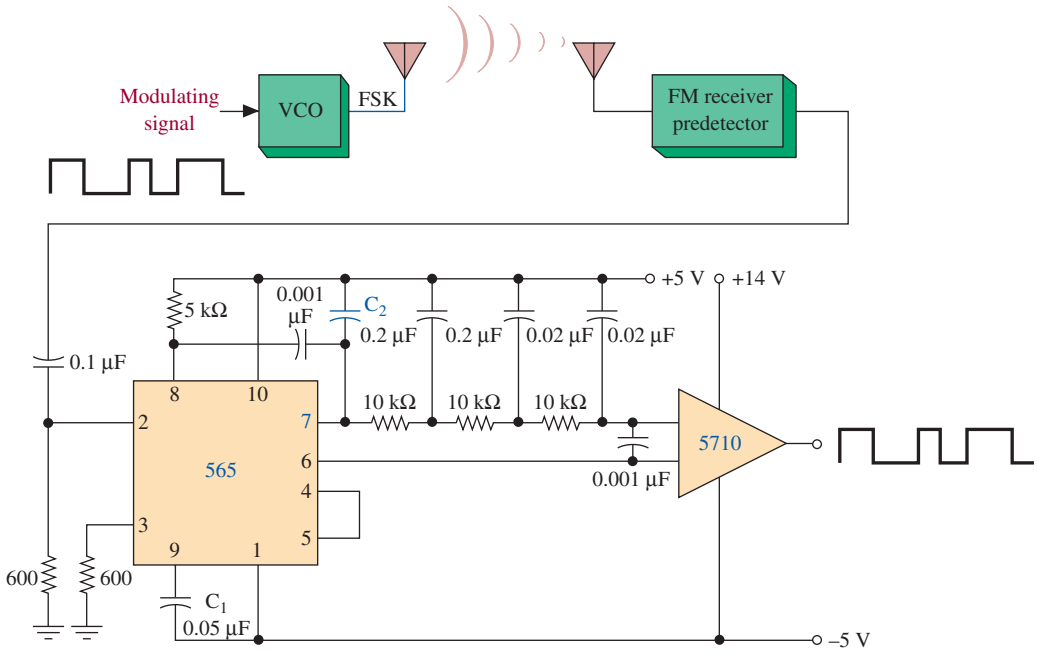


FIGURE 2 Complete FSK system.

## Phase Shift Keying

**Phase Shift Keying** method of data transmission in which data causes the phase of the carrier to shift by a predefined amount

One of the most efficient methods for data modulation is **phase shift keying** (PSK). PSK systems provide a low probability of error. The incoming data cause the phase of the carrier to phase-shift a defined amount. This relationship is expressed as

$$V_o(t) = V \sin\left[\omega_c(t) + \frac{2\pi(i-1)}{M}\right] \quad (1)$$

where $i = 1, 2, \ldots, M$
$M = 2^n$, number of allowable phase states
$n$ = the number of data bits needed to specify the phase state
$\omega_c$ = angular velocity of carrier

There are many versions of the PSK signal. Three common versions are shown in Table 1.

With $M$ (the number of allowable phase states) greater than four, the systems are referred to as *M-ary* systems, and the output signal is called a *constellation*. In a BPSK signal, the phase of the carrier will shift by 180° (i.e., $\pm \sin \omega_c t$). A diagram showing a BPSK constellation is provided in Figure 3. For a QPSK signal, the phase changes 90° for each possible state.

**Table 1** Common PSK Systems

| | | |
|---|---|---|
| Binary phase shift keying—BPSK | $M = 2$ | $n = 1$ |
| Quadrature phase shift keying—QPSK | $M = 4$ | $n = 2$ |
| 8PSK | $M = 8$ | $n = 3$ |

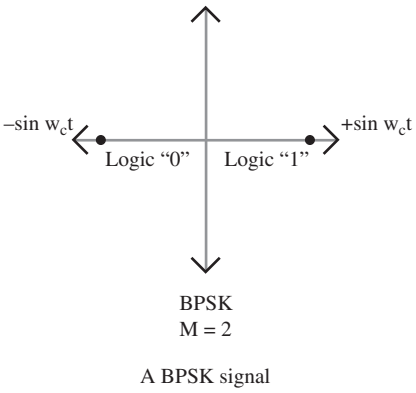


FIGURE 3 Illustration of a BPSK constellation.

## Binary Phase Shift Keying

For a BPSK signal, $M = 2$ and $n = 1$ (see Table 1). The $+\sin(\omega_c t)$ vector provides the logical "1" and the $-\sin(\omega_c t)$ vector provides the logical "0," as shown in Figure 3. The BPSK signal does not require that the frequency of the carrier be shifted, as with the FSK system. Instead, the carrier is directly phase modulated, meaning that the phase of the carrier is shifted by the incoming binary data. This relationship is shown in Figure 4 for an alternating pattern of 1s and 0s.

Generation of the BPSK signal can be accomplished in many ways. A block diagram of a simple method is shown in Figure 5. The carrier frequency [$+\sin(\omega_c t)$] is phase-shifted 180°. The + and − values are then fed to a 1 of 2 selector circuit, which is driven by the binary data. If the binary data is a 1, then the output is $+\sin(\omega_c t)$. If the binary-input data is a 0, then the $-\sin(\omega_c t)$ signal is selected for the output. The actual devices selected for performing this operation are dependent on the binary input data rate and the transmit carrier frequency.

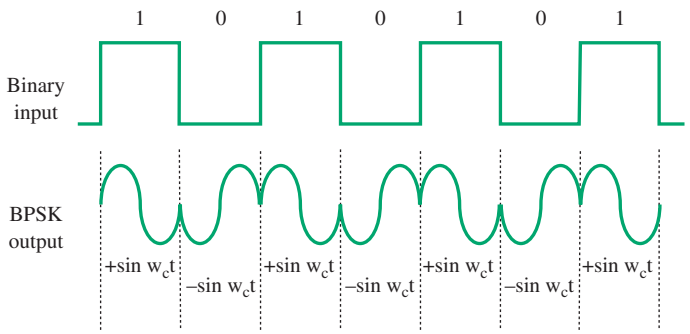


FIGURE 4 The output of a BPSK modulator circuit for a 1010101 input.

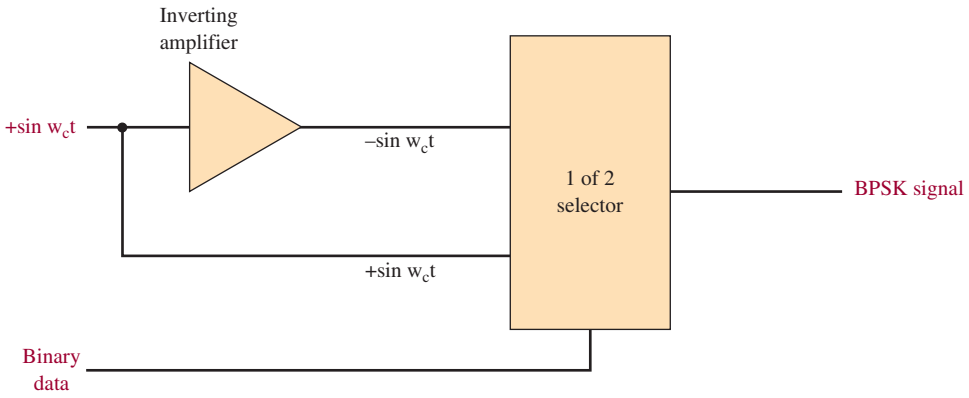


FIGURE 5 A circuit for generating a BPSK signal.

A BPSK receiver detects the phase shift in the received signal. One possible way of constructing a BPSK receiver is by using a mixer circuit. The received BPSK signal is fed into the mixer circuit. The other input to the mixer circuit is driven by a reference oscillator synchronized to $\sin(\omega_c t)$. This is referred to as *coherent carrier recovery*. The recovered carrier frequency is mixed with the BPSK input signal to provide the demodulated binary output data. A block diagram of the receive circuit is provided in Figure 6. Mathematically, the BPSK receiver shown in Figure 6 can provide a 1 and a 0 as follows:

$$\text{“1” output} = [\sin(\omega_c t)][\sin(\omega_c t)] = \sin^2(\omega_c t)$$

and by trig identity $\sin^2 A = \frac{1}{2}[1 - \cos 2A]$. Therefore

$$\text{“1” output} = \tfrac{1}{2} - \tfrac{1}{2}[\cos(2\omega_c t)]$$

The $\frac{1}{2}[\cos(2\omega_c t)]$ term is filtered out by the low-pass filter shown in Figure 6. This leaves

$$\text{“1” output} = \tfrac{1}{2}$$

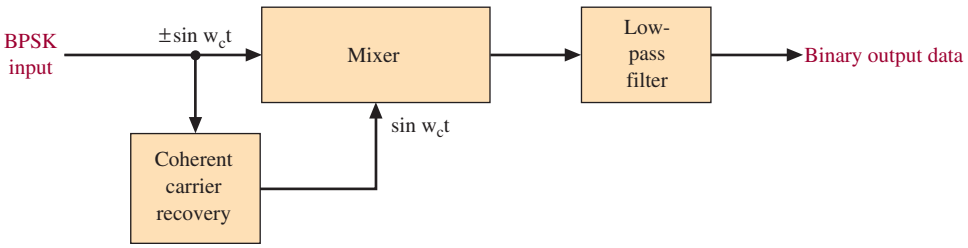


FIGURE 6 A BPSK receiver using coherent carrier recovery and a mixer circuit.

Similar analysis will show

$$\begin{aligned} \text{“0” output} &= [-\sin(\omega_c t)][\sin(\omega_c t)] \\ &= -\sin^2(\omega_c t) \\ &= -\tfrac{1}{2} \end{aligned}$$

The $\pm\frac{1}{2}$ represent dc values that correspond to the 1 and 0 binary values. The $\pm\frac{1}{2}$ values can be conditioned for the appropriate input level for the receive digital system.

## The QPSK System

The QPSK constellation provides four vectors for representing the binary data. The savings by transmitting data this way are in the reduced bandwidth requirement. The QPSK system uses two data channels, identified as the *I* and *Q* channels. Each channel contributes to the direction of the vector within the phase constellation. The four possible values for I and Q are shown in Figure 7. The BPSK signal requires a $BW_{min} = f_b$, where the QPSK signal will require only $f_b/2$ for each channel. The quantity $f_b$ refers to the frequency of each of the original bits in the data. With QPSK transmission, a **data bandwidth compression** is realized. This means that more data are being compressed into the same available bandwidth. This relationship is shown pictorially in Figure 8.

**Data Bandwidth Compression**
in QPSK transmission, more data are being compressed into the same available bandwidth as compared to BPSK

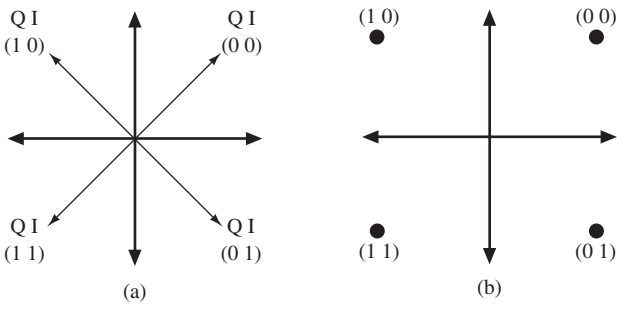


FIGURE 7 The QPSK phase constellation: (a) vector representation; (b) the data points.

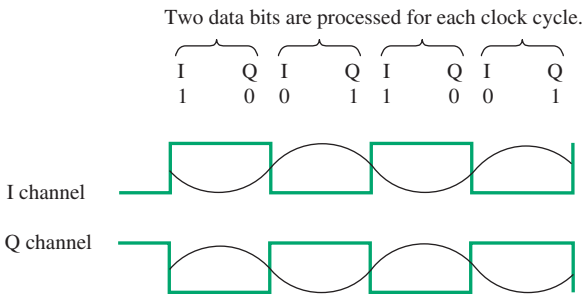


FIGURE 8 The I and Q data channels for a QPSK signal.

A block diagram of a QPSK demodulating circuit is shown in Figure 9. A carrier recover circuit is used to generate a local clock frequency, which is locked to the QPSK input carrier frequency (sin $\omega_c t$). This frequency is then used to drive the phase-detector circuits for recovering the I and Q data. The phase detector is basically a mixer circuit where sin $\omega_c t$ (the recovered carrier frequency) is mixed with the QPSK input (expressed as sin $\omega_c t + \phi_d$). The $\phi_d$ term indicates that the carrier frequency has been shifted in phase, which is to be expected for phase shift keying data. The output of the phase detector ($v_{pd}$) is then determined as follows:

$$\begin{aligned} v_{pd} &= (\sin \omega_c t)(\sin \omega_c t + \phi_d) \\ &= 0.5A \cos(0 + \phi_d) - 0.5A \cos 2\omega_c t \end{aligned}$$

A low-pass filter (LPF) removes the $2\omega_c$ high-frequency component, leaving

$$v_{pd} = 0.5A \cos \phi_d$$

The remaining $\phi_d$ value is the dc voltage representing the direction of the data vector along the I-axis. The Q data are recovered in the same way, and together the

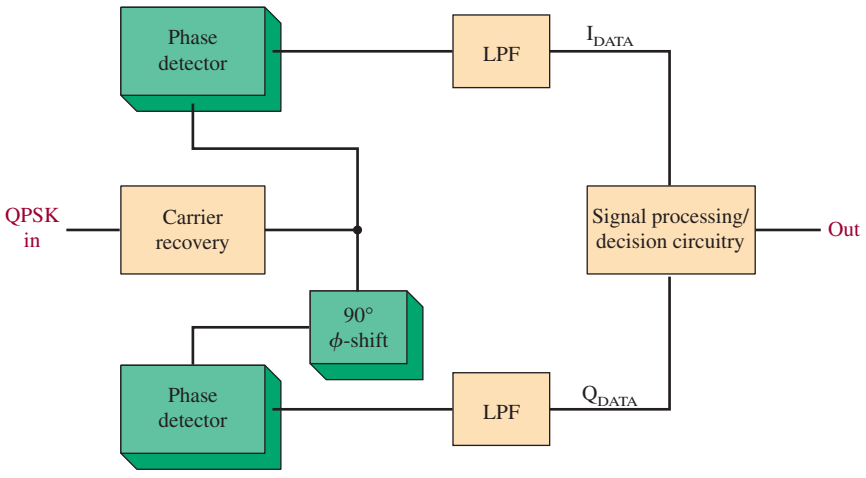


FIGURE 9 A block diagram of a QPSK demodulating circuit.

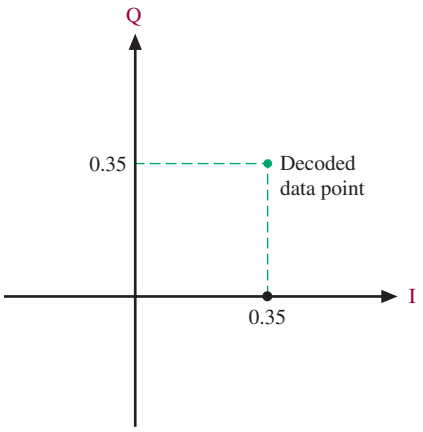


FIGURE 10 The decoded data point.

I and Q values define the direction of the data vector. For a data value of (0, 0), the data point is at a vector of 45°. Therefore, $v_{pd} = 0.5/\cos(45°) = (0.5)(0.707) = 0.35$ V. The decoded data point is shown in Figure 10. The amplitude of the data and the phase, $\phi$, will vary due to noise introduced in the transmission and data recovery. Each contributes to a noisy constellation, as shown in Figure 11. This is an example of what the decoded QPSK digital data can look like at the output of a digital receiver. The values in each quadrant are no longer single dots, as in the ideal case [Figure 7 (b)]. During transmission, noise is added to the data, and the result is a cluster of data in each quadrant of the QPSK constellation.

Once the I and Q data are decoded, signal processing and a decision circuit are used to analyze the resulting data and assign a digital value to it (e.g., 00, 10, 11, 01). The shaded areas in Figure 11 represent the decision boundaries in each quadrant. The data points, defined by the I and Q signals, will fall in one of the boundary regions and are assigned a digital value based on which quadrant the point is within.

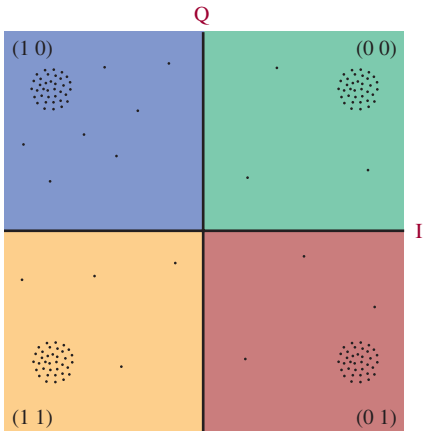


FIGURE 11 The QPSK constellation with noise at the receiver. The decision boundaries are shown by the different shaded areas.

## Differential Phase Shift Keying

Differential phase shift keying (DPSK) uses the BPSK vector relationship for generating an output. The logical "0" and "1" are determined by comparing the phase of two successive data bits. In BPSK, $\pm\sin \omega_c t$ represent a 1 and 0, respectively. This is also true for a DPSK system. Generation of the 1 and 0 outputs is accomplished by initially comparing the first bit (1) transmitted with a reference value (0). The two values are EXNORed to generate the DPSK output (0). The "0" output is used to drive a PSK circuit shown in Figure 5. A 0 generates $-\sin \omega_c t$, and a 1 generates $+\sin \omega_c t$.

| | | | | | | | | |
|---|---|---|---|---|---|---|---|---|
| Data | 1 | 0 | 0 | 1 | 0 | 1 | 1 | |
| Ref. bit | 0 | 0 | 1 | 0 | 0 | 1 | 1 | 1 DPSK digital data |
| Carrier | $-\sin$ | $+\sin$ | $-\sin$ | $-\sin$ | $+\sin$ | $+\sin$ | $+\sin$ | DPSK RF output |

A simplified block diagram of a DPSK transmitter is shown in Figure 12.

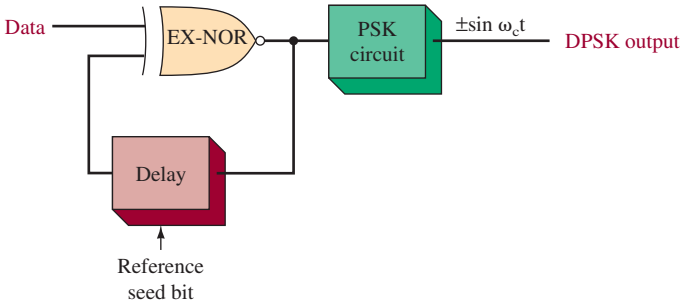


FIGURE 12 The simplified block diagram of a DPSK transmitter.

At the DPSK receiver, the incoming data is EXNORed with a 1-bit delay of itself. For the previous example, the data will be shifted as shown:

| | | | | | | | | |
|---|---|---|---|---|---|---|---|---|
| Rx carrier | $-\sin$ | $+\sin$ | $-\sin$ | $-\sin$ | $+\sin$ | $+\sin$ | $+\sin$ | |
| Shifted Rx carrier | (ref) $-\sin$ | $-\sin$ | $+\sin$ | $-\sin$ | $-\sin$ | $+\sin$ | $+\sin$ | $+\sin$ |
| Recovered data | 1 | 0 | 0 | 1 | 0 | 1 | 1 | |

The advantage of a DPSK system is that carrier recovery circuitry is not required. The disadvantage of DPSK is that it requires a good signal-to-noise ratio for it to achieve a bit error rate equivalent to QPSK.

A DPSK receiver is shown in Figure 13. The delay circuit provides a 1-bit delay of the DPSK $\pm\sin \omega_c t$ signal. The delayed signal and the DPSK signal are mixed together. The possible outputs of the DPSK receiver are

$$(\sin \omega_c t)(\sin \omega_c t) = 0.5 \cos(0) - 0.5 \cos 2w_c t$$
$$(\sin \omega_c t)(-\sin \omega_c t) = -0.5 \cos(0) + 0.5 \cos 2w_c t$$
$$(-\sin \omega_c t)(-\sin \omega_c t) = 0.5 \cos(0) - 0.5 \cos 2w_c t$$

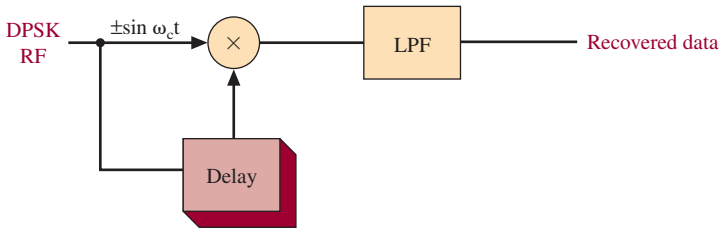


FIGURE 13 A DPSK receiver.

The higher-frequency component $2\omega$ is removed by the low-pass filter, leaving the $\pm 0.5 \cos(0)$ dc term. Because $\cos(0)$ equals 1, this term reduces to $\pm 0.5$, where $+0.5$ represents a logical 1 and $-0.5$ represents a logical 0.

## Quadrature Amplitude Modulation

Several special modulation techniques are used, over and above those previously described, to transmit digital signals. The most popular system to achieve high data rates in limited bandwidth channels is called **quadrature amplitude modulation** (QAM).

**Quadrature Amplitude Modulation**
method of achieving high data rates in limited bandwidth channels, characterized by two data signals that are 90° out of phase with each other

The block diagram in Figure 14 shows a QAM transmitter. The binary data are first fed to a ÷ data block that essentially produces two data signals at half the original bit rate by feeding every other data bit to its two outputs. These two-level outputs are then converted to four-level baseband streams. The resultant four-level symbol streams of the I and Q channels are then applied to the modulators in Figure 14. Notice the carrier for the Q-channel modulator. It is shifted 90° from the

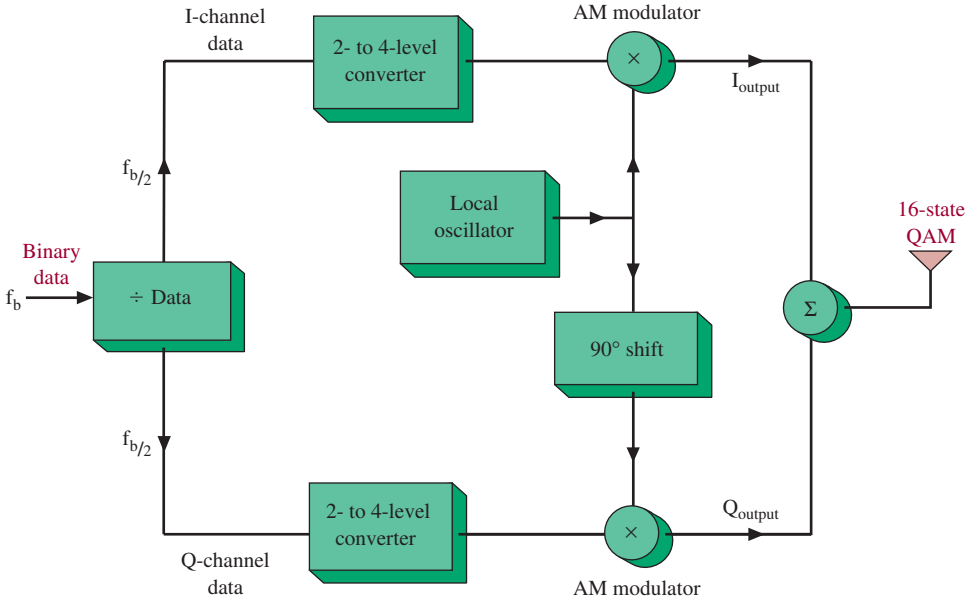


FIGURE 14 16-QAM transmitter.

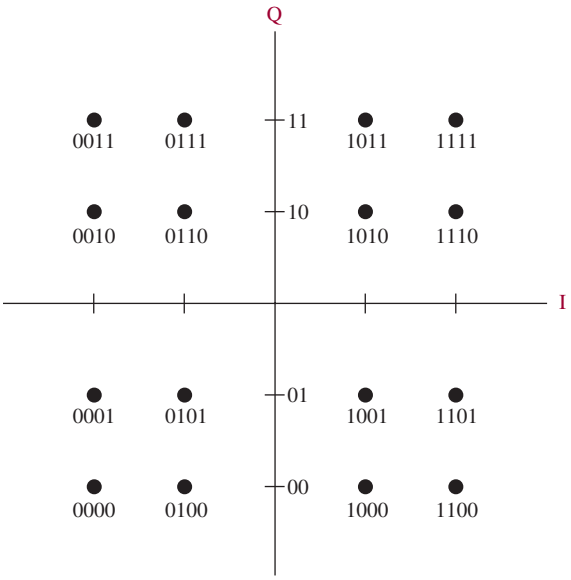


FIGURE 15 16-QAM (4 × 4) constellation pattern.

I channel and is said to be in quadrature. This explains its Q designation, while the I channel is so named because it is the in-phase channel. The net result of this is the ability to transmit large amounts of digital data through limited bandwidth channels.

The QAM demodulator reverses the modulator process, thereby providing the original binary data signal. Some insight into QAM systems is provided by feeding the demodulated I signal into the horizontal input and the Q signal into the vertical input of an oscilloscope. The result (shown in Figure 15) is called a **constellation pattern** because of its resemblance to stars. The gain and position of each channel must be properly adjusted and a signal must also be applied to the scope's Z-axis input to kill the scope intensity during the digital state transition times.

**Constellation Pattern**
display used to monitor QAM data signals on an oscilloscope to provide information on linearity and noise

The constellation pattern can be used to analyze the system's linearity and noise performance. Because QAM involves AM, linearity of the transmitter's power amplifiers can be a cause of system error. Linearity problems are indicated by unequal spacing in the constellation pattern. Noise problems are indicated by excessive blurring and spreading out of the points.

QAM digital transmission systems have become dominant in recent years. Besides the 4 × 4 system introduced here, 2 × 2 and 8 × 8 systems are also commonly used.

## Loopbacks

**Loopback**
test configuration for a data link; the receiver takes the data and sends it back to the transmitter, where it is compared with the original data to indicate system performance

Many digital modulation systems include a **loopback** capability. The receiver takes the received data and sends them back to the transmitter. The data are then compared with the originally transmitted data to provide an indication of system performance. Bit errors can occur both in the original transmission and in the loopback, so the bit error rate cannot be pinpointed because it will not be known where the error

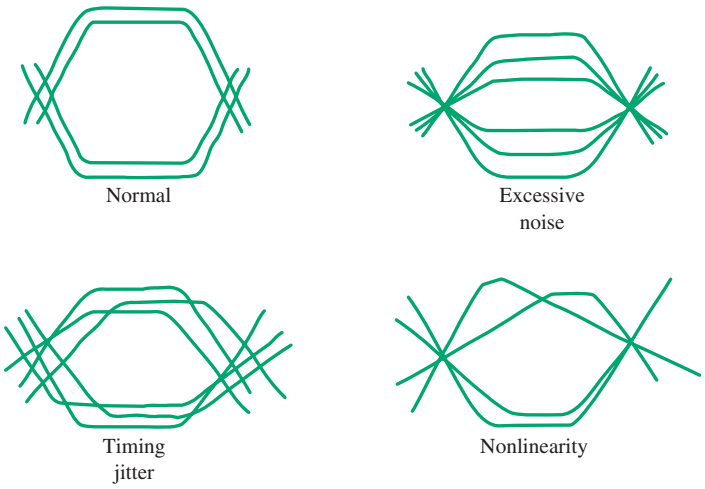


FIGURE 16 Eye patterns.

occurred. Nonetheless, the loopback test is very helpful in diagnosing the basic system performance.

## Eye Patterns

Another technique that is extremely helpful in diagnosing the performance of a digital modulation system is the generation of **eye patterns.** They are generated by "overlaying" on an oscilloscope all the digital bit signals received. Ideally, this would result in a rectangular display because of the persistence of the CRT phosphor. The effects of transmission cause various rounding effects, which result in a display resembling an eye.

**Eye Patterns** using the oscilloscope to display overlayed received data bits that provide information on noise, jitter, and linearity

Refer to Figure 16 for the various possible patterns. The opening of the eye represents the voltage difference between a 1 or a 0. A large variation indicates noise problems, while nonsymmetrical shapes indicate system distortion. Jitter and undesired phase shifting are also discernible on the eye pattern. The eye pattern can be viewed while making adjustments to the system. This allows for the immediate observation of the effects of filter, circuit, or antenna adjustments.



## 3 Spread-Spectrum Techniques

The first spread-spectrum systems were utilized by the U.S. government toward the end of World War II. These techniques allow transmissions that cannot be jammed (i.e., rendered useless by a counter "noise" signal at the same frequency) nor detected by the enemy. Military applications are still widespread, but as explained subsequently, commercial use is increasing due to performance advantages.

Spread spectrum started to gain serious commercial attention in 1985 when the Federal Communications Commission (FCC) opened the industrial, scientific, and medical (ISM) band for unlicensed operation of devices under FCC technical regulations 15.247. The FCC permits spread-spectrum modulation at a maximum transmitter power of 1 W in three bands: 902–928 MHz, 2400–2483.5 MHz, and 5725–5850 MHz.



The N1996A Agilent CSA Spectrum Analyzer. (© Agilent Technologies, Inc. 2007 Reproduced with Permission, Courtesy of Agilent Technologies, Inc.)

Spread spectrum is becoming the technology of choice in many wireless applications, including cellular telephones, mobile Internet, wireless local-area networks (WLANs), and automated data collection systems using portable scanners of universal product code (UPC) codes. Other applications include remote heart monitoring, industrial security systems, and very small aperture satellite terminals (VSAT). Multiple spread-spectrum users can coexist in the same bandwidth if each user is assigned a different "spreading code," which will be explained subsequently.

As we have seen, regular modulation schemes tend to fully utilize a single band of frequencies. Noise in that band will obviously degrade the signal, and therefore it is vulnerable to jamming. This single-frequency band also allows detection by undesired recipients, who may track down the signal source via direction-finding (DF) techniques. The spread-spectrum solution to these problems takes one of two forms, frequency hopping and direct sequence. Both of these spread spectrum techniques use a pseudonoise technique for spreading the signal. The concept of pseudonoise codes is presented first. That discussion is followed by a look at frequency hopping and direct sequence spread spectrum.

**Pseudonoise (PN) Codes**
digital codes with pseudorandom output data streams that appear to be noiselike

**Spread**
the RF signal is spread randomly over a range of frequencies in a noiselike manner

## Pseudonoise (PN) Codes

**Pseudonoise (PN) codes** are popular in spread-spectrum communications because the randomness of the serial output data stream appears to be noiselike. These random data streams are used to **spread** the RF signal so that it appears to be noise, which means that the RF signal is randomly spread over a range of frequencies in a noiselike manner. The randomness of the signal is due to the fact that the 1 0 data pattern does not appear to repeat. PN sequences do repeat, however, but only after a

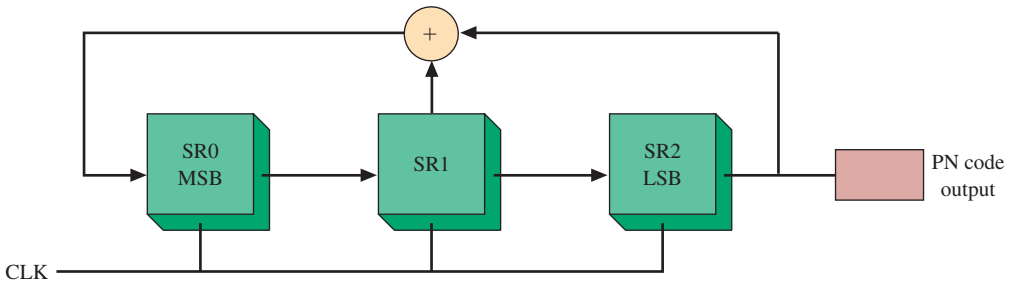


FIGURE 17 A 7-bit sequence generator.

long time. How often the pattern repeats depends on the PN sequence generating circuit. The application of PN codes in spread-spectrum communications will be explained in this section. The operation of a PN sequence generator circuit is explained first.

The method for implementing PN codes is quite simple. It requires the use of shift registers, feedback paths, and EXOR gates. A random pattern of 1s and 0s are output as the circuit is clocked. The data pattern will repeat if the circuit is clocked a sufficient number of times. For example, the circuit for a 7-bit PN sequence generator is shown in Figure 17. The 7-bit PN sequence generator circuit contains three shift registers, an EXOR gate, and feedback paths. The circuit structure and the number shift registers in the circuit can be used to determine how many times the circuit must be clocked before repeating. This is called the **PN sequence length.** The equation for calculating the length of the PN sequence is provide in Equation (2).

**PN Sequence Length**
the number of times a PN generating circuit must be clocked before repeating the output data sequence

$$\text{PN sequence length} = 2^n - 1 \tag{2}$$

where $n =$ the number of shift registers in the circuit. A PN sequence that is $2^n - 1$ in length is said to be of **maximal length.** For example, the PN sequence generator shown in Figure 17 contains three shift registers ($n = 3$) and a maximal length of $2^3 - 1 = 7$. An example of using Equation (2) to determine the PN sequence length is provided in Example 2.

**Maximal Length**
indicates that the PN code has a length of $2^n - 1$

## Example 2

*Determine the sequence length of a properly connected PN sequence generator containing*
*(a) 3 shift registers* ($n = 3$).
*(b) 7 shift registers* ($n = 7$).

### Solution

(a) $n = 3$, PN sequence length $= 2^3 - 1 - 8 - 1 = 7$ **(2)**
(b) $n = 7$, PN sequence length $= 2^7 - 1 = 127$ **(2)**

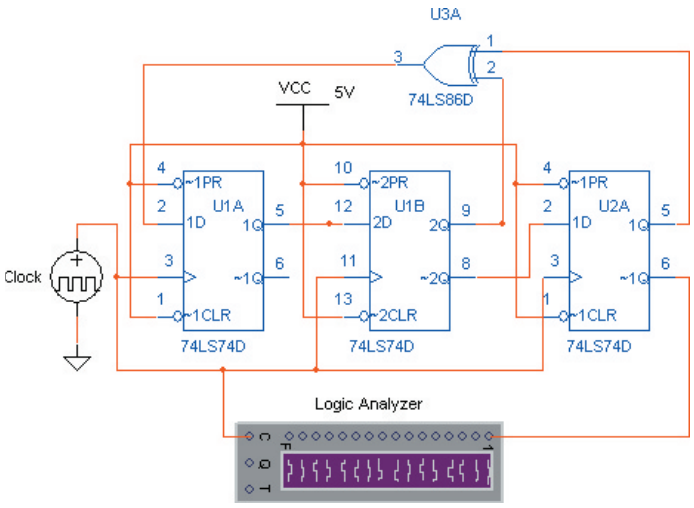


FIGURE 18 An implementation of a 7-bit PN sequence generator using Electronics Workbench™ Multisim.

An implementation of a 7-bit PN sequence generator circuit using Electronics Workbench™ Multisim is shown in Figure 18. The circuit consists of three shift registers using 74LS74 D-type flip-flops (U1A, U1B, and U2A). Each shift register in the PN sequence generator shown in Figure 18 is driven by the system clock. The Q outputs of U1B and U2A are fed to the input of the EXOR gate U3A (74LS86). The circuit is clocked $2^n - 1$ times (7 times) before repeating. The data is output serially, as shown in Figure 19. Notice that the PN code output data stream repeats after seven cycles. The reason the PN circuit repeats after $2^n - 1$ times is that an all zero condition is not allowed for the shift register because such a condition will not propagate any changes in the shift-register states when the system is clocked.

The circuits required to implement PN sequences are well known. Modern spread-spectrum circuits have the PN sequence generator integrated into the system

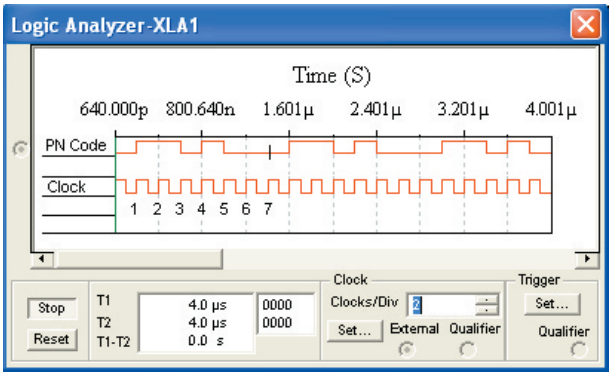


FIGURE 19 The serial data output stream for the 7-bit PN sequence generator.

**Table 2** Connections for Creating PN Sequence Generators

| Number of Shift Registers ($n$) | Sequence Length | EXOR Inputs |
|---|---|---|
| 2 | 3 | 1, 2 |
| 3 | 7 | 2, 3 |
| 4 | 15 | 3, 4 |
| 5 | 31 | 3, 5 |
| 6 | 63 | 5, 6 |
| 7 | 127 | 6, 7 |
| 9 | 511 | 5, 9 |
| 25 | 33,554,431 | 22, 25 |
| 31 | 2,147,483,647 | 28, 31 |

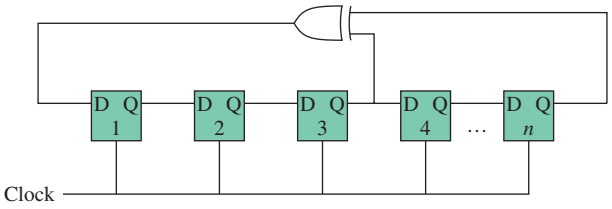


FIGURE 20 The PN sequence generator circuit structure for the connections listed in Table 2. The circuit shown is connected with five shift registers ($n = 5$) and a maximal length of 31.

IC. Table 2 lists the connections required to create different sequence lengths for the circuit structure provided in Figure 20. The table shows only a partial listing of some of the shorter PN sequence lengths. Many spread-spectrum systems use a PN sequence length that is much longer. The PN circuit shown in Figure 20 contains five shift registers ($n = 5$). Table 2 shows the EXOR inputs for the circuit that come from the Q outputs of the shift registers.

## Frequency Hopping

In **frequency hopping spread spectrum,** the data is transmitted by a carrier that is switched in frequency in a pseudorandom fashion. *Pseudorandom* implies a sequence that can be re-created (e. g., at the receiver) but has the properties of randomness. The time of each carrier block is called **dwell time.** Dwell times are usually less than 10 ms. The receiver knows the order of the frequency switching, picks up the successive blocks, and assembles them into the original message.

**Frequency Hopping Spread Spectrum**
transmitting data by a carrier that is switched in frequency in a pseudorandom fashion

**Dwell Time**
the time each carrier spends at a specific frequency

A block diagram for a frequency hopping system is provided in Figure 21. Essentially identical programmable frequency synthesizers and hopping sequence generators are the basis for these systems. The receiver must synchronize itself to the transmitter's hopping sequence, which is done via the synchronization logic. A spread-spectrum system obviously has an extra degree of complexity compared to conventional systems and is more and more feasible economically due to the advantages offered. Of course, this has always been true in many military applications.

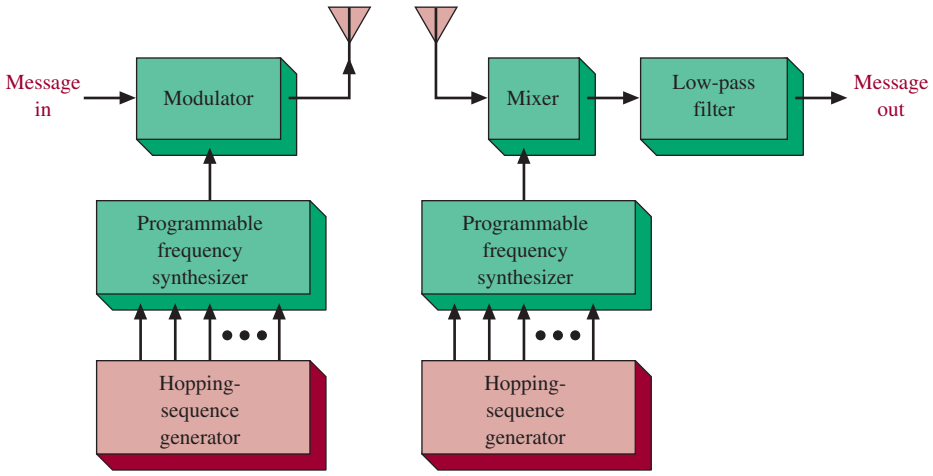


FIGURE 21 Frequency hopping spread spectrum.

A simplified picture of the RF spectrum for a frequency hopping signal is provided in Figure 22. This image shows the shifting of the carrier frequency over a 600 kHz range. Note that seven frequencies are displayed. The pattern for the shifting of the frequencies is generated by a PN code sequence generator. In this case, the 3-bit contents of the PN sequence generator shown in Figure 17 were used to generate the frequency hopping. The current state of the shift registers (SR0–SR2) randomly select each frequency, which requires that the PN sequence generator be initiated with a seed value.

The first step for configuring the PN sequence generator is to initialize the shift registers with a known value. In this case, the sequence generator is seeded with a 1 0 0 value. This step is shown in Table 3, which lists the shift register contents as the generator is clocked. At shift 0, the 1 0 0 contents select frequency D. At shift 1, the shift register contents of 0 1 0 select frequency B. This repeats for the length of the PN sequence generator and produces the seven unique states and frequencies A–G. The frequencies are randomly selected until the sequence begins repeating on shift 7, as shown with the shift register contents of 1 0 0 and the selection of frequency D.

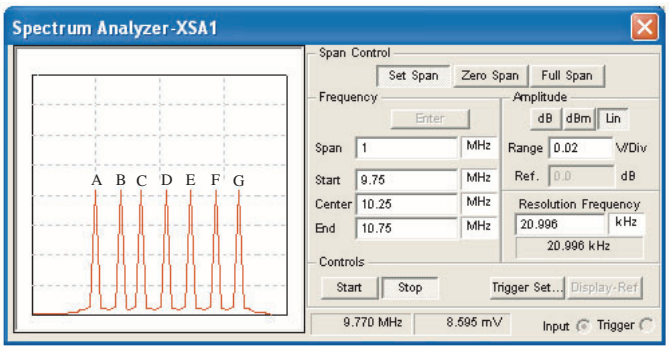


FIGURE 22 A simplified RE spectrum for a frequency hopping spread-spectrum signal.

**Table 3** The Shift Register Contents for a PN Sequence Generator with $n = 3$ and a Seed Value of 1 0 0

| Shift Number | SR0 | SR1 | SR2 | Freqency |
|---|---|---|---|---|
| 0 | 1 | 0 | 0 | D |
| 1 | 0 | 1 | 0 | B |
| 2 | 1 | 0 | 1 | E |
| 3 | 1 | 1 | 0 | F |
| 4 | 1 | 1 | 1 | G |
| 5 | 0 | 1 | 1 | C |
| 6 | 0 | 0 | 1 | A |
| 7 | 1 | 0 | 0 | D |

## Direct Sequence Spread Spectrum (DSSS)

**Direct sequence spread spectrum (DSSS)** is often used in the transmission of digital bits in modern wireless digital systems. Its pseudorandom sequence uses pulses that are shorter than the message bit, called **chips.** The chips successively modulate fractions of the bit that typically phase-shift the carrier. The receiver multiplies the incoming signal by the same chip signal sequence to recover the original modulated digital signal. Systems utilizing this technique are called **code-division multiple-access (CDMA)** systems. **Multiple access (MA)** applies to any method used to multiplex many signals in one communications channel.

**DSSS**
direct sequence spread spectrum

**Chips**
in the transmission of digital bits, pulses shorter than the message bits

**Code-Division Multiple-Access (CDMA)**
communications system in which spread-spectrum techniques are used to multiplex more than one signal within a single channel

**Multiple Access**
any method of multiplexing many channels in one communications channel

**Hit**
when two spread-spectrum transmitters momentarily transmit at the same frequency; they coincide at that instant

These spread-spectrum techniques utilize a far wider bandwidth than that required by conventional modulation schemes. Besides the two advantages (detection and the prevention of jamming) for the military already described, other advantages have led to nonmilitary applications. Spread spectrum permits many transmitters to operate over the same channel with minimal interference because the pseudorandom sequences only rarely coincide. This coincidence, termed a **hit,** adds only a low-level noise to the overall receptions. The net result is a more efficient channel utilization (more channels), especially under conditions where continuous transmissions are not being made. In fact, spread-spectrum communications are now being added to bands fully used by conventional communications techniques with minimal interference. Another advantage of spread spectrum is the reduction in fading it affords compared to conventional (narrowband) systems. Different parts of the frequency spectrum tend to fade at variable rates. Thus, each hop of a frequency-hopping signal has an independent characteristic. The ratio of maximum to minimum received signal strength (fading) is typically 2 to 3 dB, compared with 20 to 30 dB for conventional transmission.

Spread-spectrum techniques are also widely used in radar systems. The spread carrier, as determined by the pseudorandom sequence, allows the receiver to determine accurately the time the transmitter sent its energy with minimal effects from noise, and so on. The distance to a transmitter (ranging) or object via a reflection can thereby be made accurately with high reliability.

Figure 23 shows the basic format of a direct-sequence spread-spectrum system. These systems are also referred to as pseudonoise (PN) spread-spectrum signaling systems. The spreading signal is a carrier modulated with a binary sequence having a pseudorandom (pseudonoise or PN) nature generated by a PN sequence generator circuit. The sequence generated is called the **signature sequence.** The clock rate of the shift register is very high compared with the data rate to be transmitted.

**Signature Sequence**
the pseudorandom digital sequence used to spread the signal

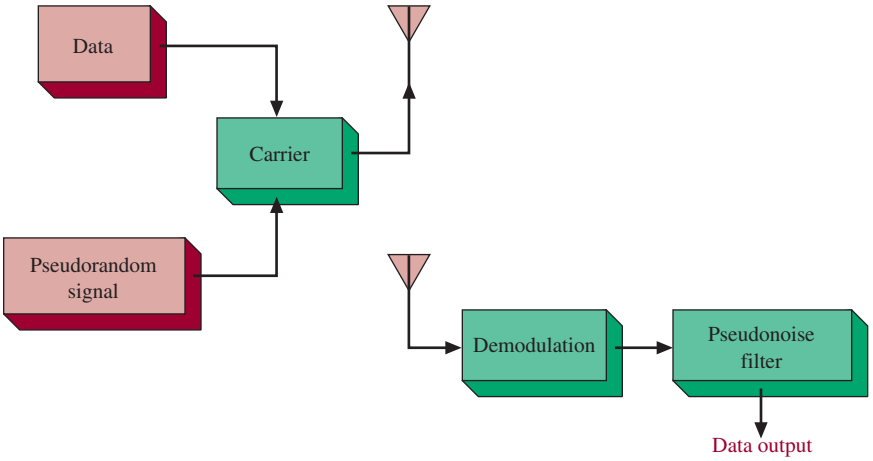


FIGURE 23 Direct sequence spread spectrum.

One period of the shift-register sequence contains thousands of binary transitions call chips, and they are modulated with one bit of binary data. The receiver uses a PN sequence generator identically programmed (via logic connections) to the transmitter's PN sequence. The positions of the two shift registers along with the pseudorandom sequence are synchronized by analysis of the received waveform, with a decision circuit picking the signal with the highest correlation level. Other users in the band may have similar transmitters and receivers but use different logic connections in their PN sequence generators so they can present a different signature. Receivers do not recognize other signatures; they see them as background noise.

An example of implementing a DSSS circuit using Electronics Workbench™ Multisim is provided next. This material demonstrates how a BPSK signal is spread using the PN code and how the original data is recovered. The circuit used in this example is shown in Figure 24. This DSSS circuit uses a 7-bit PN sequence to spread the signal. The PN sequence generating circuit is not shown in this schematic but is shown in Figure 18. An alternating 1 0 data pattern is fed into a BPSK circuit. The BPSK circuit is considered the modulating circuit and the 1 0 data pattern is the input data. The waveforms for the BPSK output and the PN code are shown in Figure 25. Notice the regular phase shift of the BPSK output signal due to the input data 1 0 pattern. The PN code repeats after 7 clock cycles (also shown in Figure 25). The BPSK output and the PN code are then mixed together to create the DSSS output, as shown in the schematic of the circuit. This is indicated as mixer-TX in Figure 24. The resulting output (DSSS output) is provided in Figure 26. Notice the shape of the BPSK signal in the time domain. What is shown are the chips of data that are being transmitted.

The circuit shows that the DSSS output is connected to the receiver circuit. In practice the DSSS signal is transmitted to the receiver via RF. The receiver filters and amplifies the signal, which is the same basic concept that applies to all receiver front-ends. The received DSSS signal is fed into a receive mixer circuit (mixer-RX), which mixes the DSSS signal with the receiver's PN code. The PN code must be locked (synchronized) to the receiver's data stream, a necessary condition for the DSSS signal to be **despread.** Despreading the signal means that the signal is returned to its original modulated format. In this case, the original format

**Despread**
return the DSSS signal back to its original modulated format

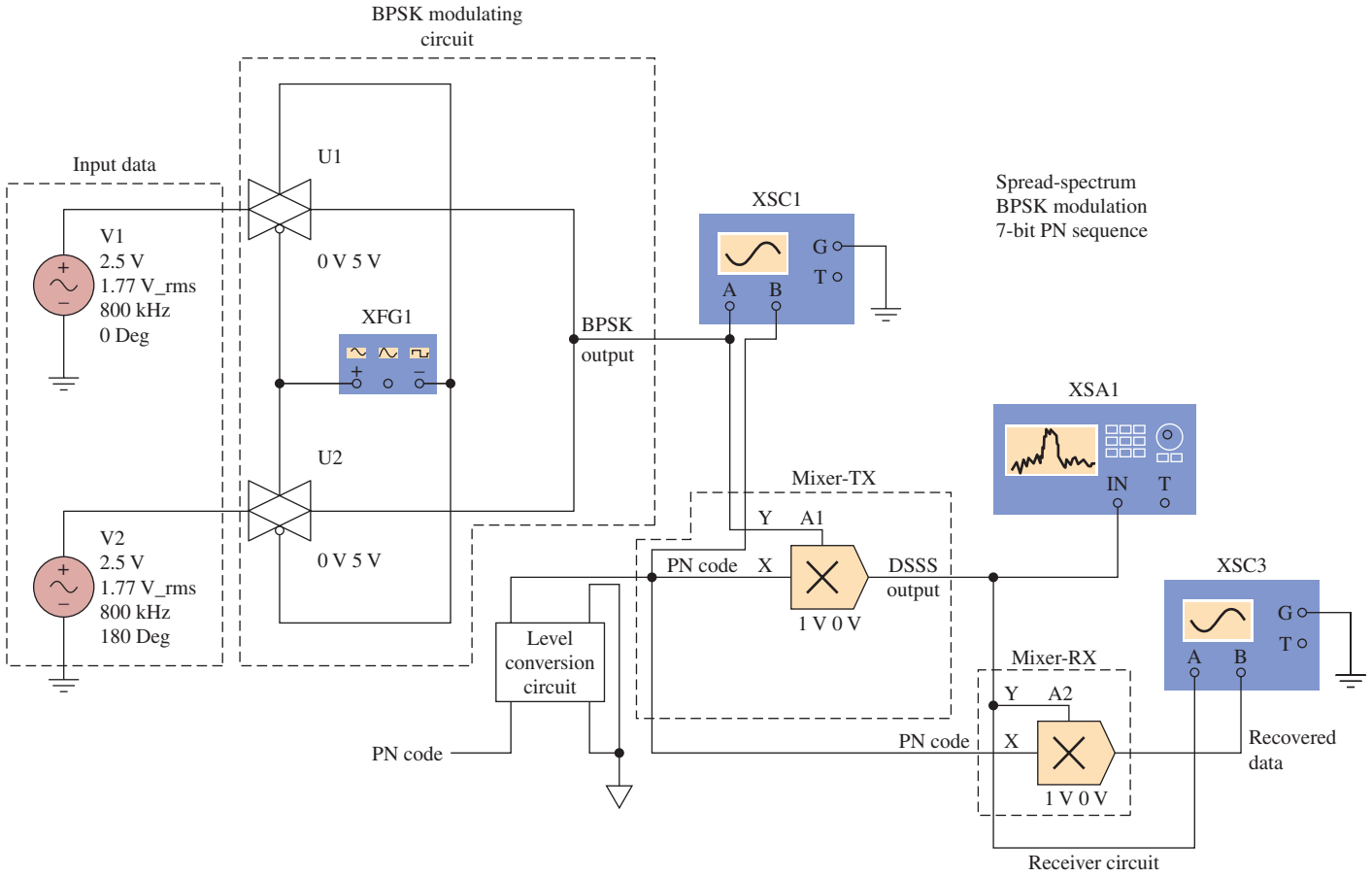


FIGURE 24 An implementation of a DSSS circuit using Electronics Workbench™ Multisim.

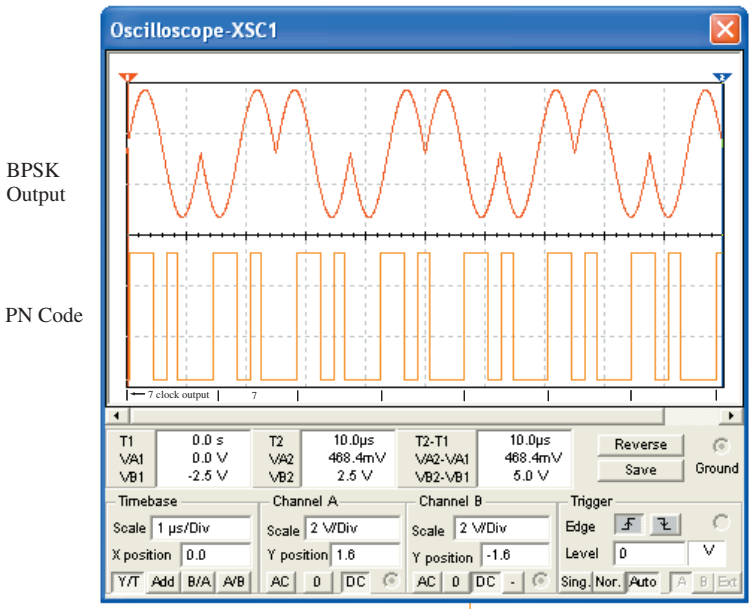


FIGURE 25 The waveforms for the BPSK output and the PN code.

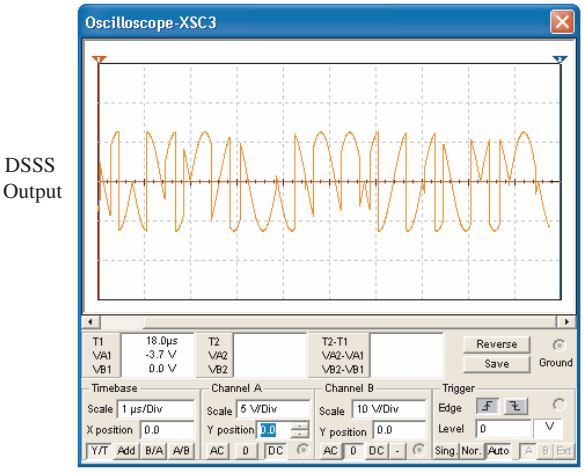


FIGURE 26 The DSSS output signal generated by mixing the BPSK output and the PN code.

is the BPSK signal. The receiver must have the same PN code as the transmitter to recover the data. The DSSS output and the recovered data are provided in Figure 27. Notice that the recovered data is the same as the original BPSK data stream shown in Figure 25.

The first example using Electronics Workbench™ Multisim demonstrated how the DSSS signal was generated and how the original BPSK data was recovered. The

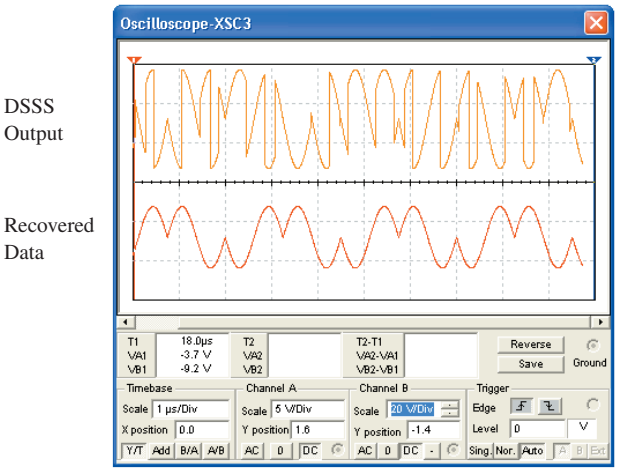


FIGURE 27 The DSSS signal input to the receiver and the recovered BPSK data.

next example demonstrates the spreading of the modulated digital signal. The modulation technique is BPSK, and the spectrum for the BPSK signal is shown in Figure 28. Notice that the center of the two peaks is at about 2.8 MHz and that there are two peaks at about ± 100 kHz from the center frequency (2.8 MHz). The following guidelines were used to set the circuit parameters to spread the BPSK signal properly.

| | |
|---|---|
| BPSK modulation rate | Lower frequency |
| Chip rate | Medium frequency (approximately five to seven times the modulation rate) |
| Carrier frequency | High frequency (two to five times the chip rate) |

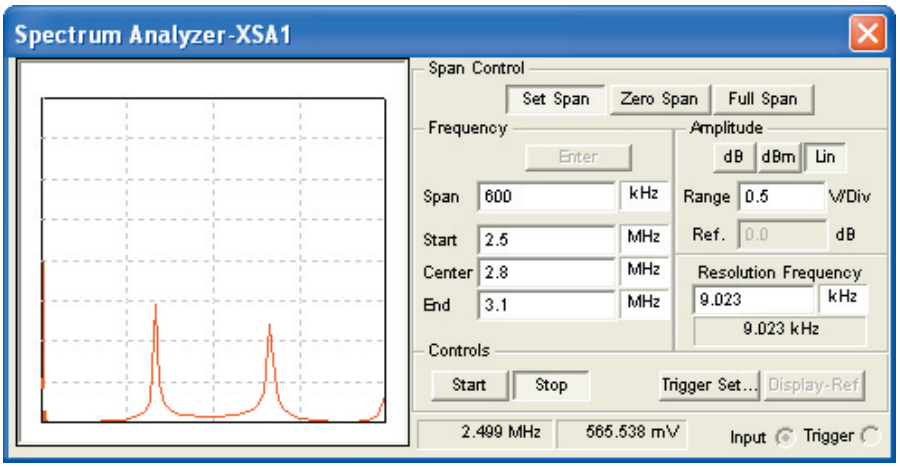


FIGURE 28 The spectrum of the BPSK signal.

**Table 4** The Circuit Settings for Spreading the Digital Signal

| | |
|---|---|
| BPSK modulation rate | 100 kHz |
| Chip rate | 700.280 kHz |
| Carrier frequency | 2.8 MHz |

The BPSK modulation rate is the digital bit rate. The chip rate is the rate of the bit pattern from the PN sequence generator circuit. The carrier frequency has been set to 2.8 MHz. For this example, the parameters are set as listed in Table 4.

Notice from Table 4 that the BPSK modulation rate of 100 kHz is the ± frequency separation of the two BPSK peaks shown in Figure 28. The chip rate has been set to about seven times the BPSK modulation rate. This will significantly change the time domain signals for the BPSK and PN code. An example is shown in Figure 29. The BPSK signal now repeats several cycles before changing phase. Compare to Figure 25, where the phase changes after each cycle. The circuit parameters for Figure 29 have been changed to satisfy the requirements set forth in Table 4.

Now examine the signal after it has been spread by the DSSS circuit. The result is shown in Figure 30. Notice that the signal is now spread about 700 kHz, which was accomplished with a 7-bit PN with a chip rate of about 700 kHz. Compare the spectrum of this waveform to that shown in Figure 28. There is a significant

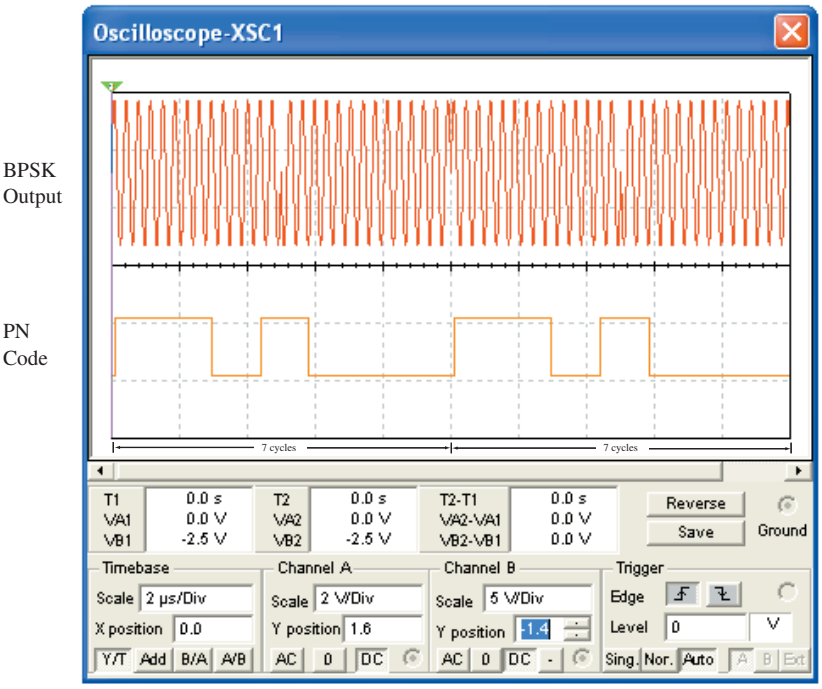


FIGURE 29 The time domain waveforms for the BPSK and PN code outputs using the proper chip–modulation rate relationship.

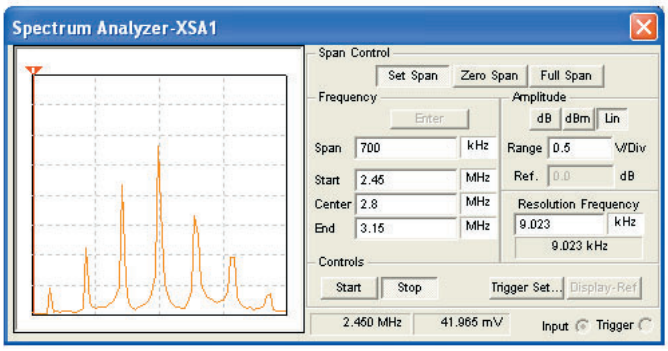


FIGURE 30 The spectrum of the signal after spreading.

change in the spectral content. The spreading of the DSSS signal can be calculated using Equation (3). Examples of applying Equation (3) are provided in Example 3.

$$\text{Spreading} = \frac{\text{RC}}{\text{RB}} \tag{3}$$

where RC is the chip rate and RB is the modulation bit rate.

**Example 3**

*Determine the spreading of a DSSS signal given the following parameters.*

*(a) Modulation bit rate: 56 kbps*
*Chip rate: 560 kbps*
*(b) Modulation bit rate: 256 kbps*
*Chip rate: 1792 kbps*

**Solution**

(a) $$\text{Spreading} = \frac{560\,\text{kbps}}{56\,\text{kbps}} = 10 \tag{3}$$

(b) $$\text{Spreading} = \frac{1792\,\text{kbps}}{256\,\text{kbps}} = 7 \tag{3}$$



## 4 Orthogonal Frequency Division Multiplexing (OFDM)

**Orthogonal frequency division multiplexing (OFDM),** also called **multitone modulation,** is a digital communications technique implemented today in many wireless applications. These applications include the 802.11a and 802.11g wireless LANs, some DSL and cable modems WiMax and North American digital radio. The OFDM concept originated in the 1960s but has only recently been implemented because of the availability of affordable digital signal processing.

In OFDM, the data is divided into multiple data streams and is transmitted using multiple subcarriers at fixed frequencies over the same wired or wireless communications channel. The data streams over the subcarriers can be of any digital

**Orthogonal Frequency Division Multiplexing (OFDM)**
a technique used in digital communications to transmit the data on multiple carriers over a single communications channel

**Multitone Modulation**
another name for orthogonal frequency division multiplexing

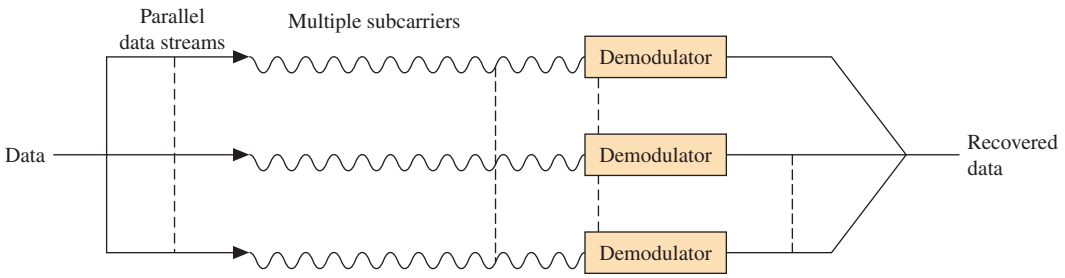


FIGURE 31 Block diagram of OFDM transmission.

modulation method. This technique enables the receiver's demodulators to see only one carrier. The benefits include the following:

- improved immunity to RF interference
- low multipath distortion

The OFDM technique increases the symbol length, which provides separation in the bits in the data streams, thereby minimizing the possibility of intersymbol interference (ISI). Thus, the demodulators for each channel do not see an interfering signal from an adjacent channel. (Note: Two signals are **orthogonal** if the signals can be sent over the same medium without interference.) This concept is demonstrated in Figure 31.

**Orthogonal**
two signals are orthogonal if the signals can be sent over the same medium without interference

An example of an OFDM transmission of a data sequence is provided next. In this example, the data sequence is the ASCII message "BUY." The ASCII data value is transmitted in parallel over eight BPSK carries, which is shown in Figure 32. The binary

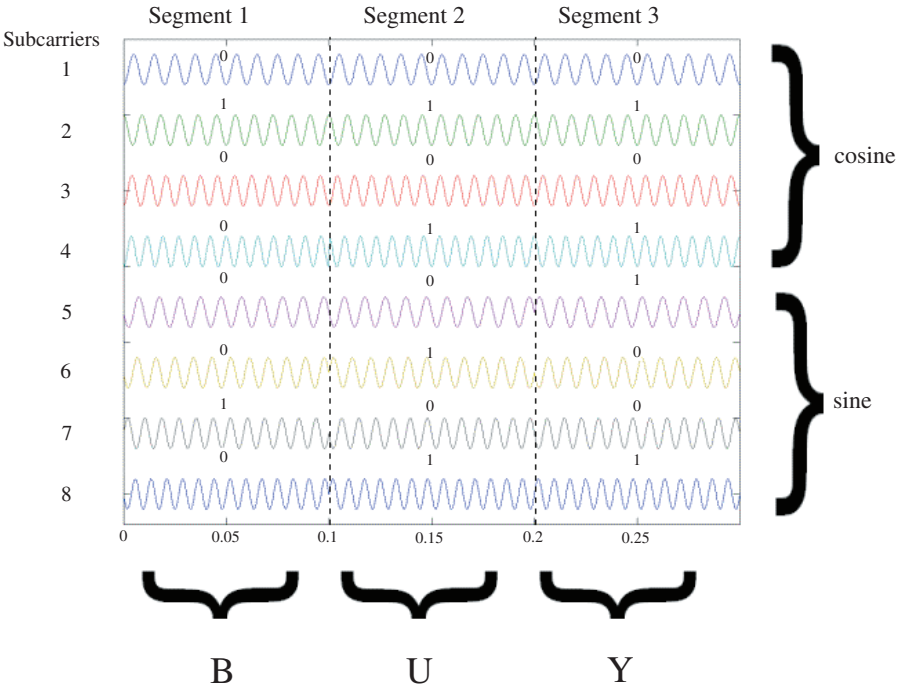


FIGURE 32 Example of the OFDM transmission of the ASCII characters B, U, and Y.

**Table 5** The ASCII Values for the Letters B, U, and Y

| Letter | 8-Bit ASCII Value |
|---|---|
| B | 0 1 0 0 0 0 1 0 |
| U | 0 1 0 1 0 1 0 1 |
| Y | 0 1 0 1 1 0 0 1 |

values for each carrier are listed. Subcarriers 1–4 are cosine waves, while subcarriers 5–8 are sine waves. Figure 32 shows three segments for the multiple BPSK carriers. Segment 1 shows the ASCII code for "B." Segment 2 shows the ASCII code for "U," and segment 3 shows the ASCII code for "Y." The ASCII values for BUY are provided in Table 5. Note that each subcarrier is being used to carry just one bit of information per segment. To prevent intersymbol interference in OFDM systems, a small guard time is usually inserted (not shown in Figure 32). This guard time may be left as a gap in transmission or it may be filled with a **cyclic prefix**, which means that the end of a symbol is copied to the beginning of the data stream, thus leaving no gap. This modification makes the symbol easier to demodulate.

**Cyclic Prefix**
the end of a symbol is copied to the beginning of the data stream, thereby increasing its overall length and thus removing any gaps in the data transmission

## HD Radio

Another technology that uses OFDM for transporting the digital data is HD radio. **HD radio** is a digital radio technology that operates in the same frequency bands as broadcast AM (530–1705 kHZ) and FM (88–108 MHz). Another name for HD radio technology is **in-band on-channel (IBOC)** and was developed in 1991 by iBiquity Digital. The HD radio technology was officially approved by the FCC in 2002.

In AM HD radio, the digital signal is placed above and below the analog AM carrier as shown in Figure 33. This is called a "hybrid" AM signal. The term **hybrid** refers to the fact that both the analog and digital signal share the same bandwidth. The normal spectral bandwidth of an analog AM transmission is 10 kHZ (±5 kHz for the upper and lower sidebands). In an HD radio hybrid transmission, an additional 10 kHz is added to the spectrum on each side of the carrier resulting in a ±15 kHz. This results in a total spectral bandwidth for the AM HD radio transmission of 30 kHz. AM HD radio transmission uses 81 OFDM carries with a 181.7-Hz spacing between carriers. The digital data rate for AM HD radio is 36 kbps, which produces an audio signal with comparable quality to the current analog FM.

**HD Radio**
a digital radio technology that operates in the same frequency bands as broadcast AM and FM

**In-Band On-Channel (IBOC)**
original name for HD radio technology

**Hybrid AM, FM**
Both the analog and digital signals share the same channel bandwidth

The frequency spectrum for a hybrid FM transmission is shown in Figure 34. The analog transmitted FM signal occupies ±130 kHZ of bandwidth. The digital data is located in the 130–199-kHz range above and below the center frequency of the FM signal. The total spectral bandwidth used by the hybrid FM system is ±200 kHz. The digital data rate for the primary audio channel is 96 kbps, which produces a near CD quality audio signal.

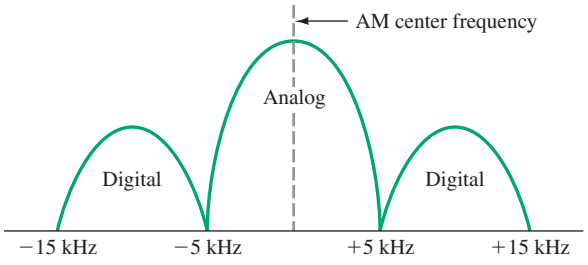


FIGURE 33 The RF spectrum for a hybrid (analog and digital) AM transmission.

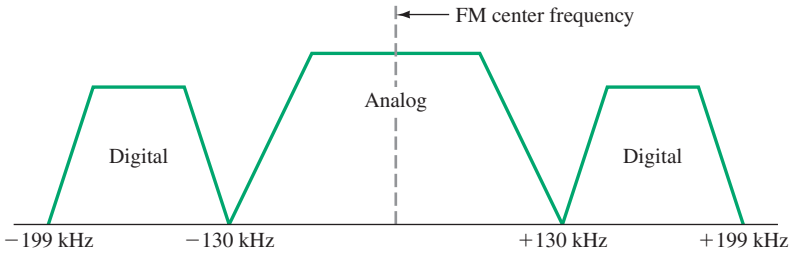


FIGURE 34 The RF spectrum for a hybrid (analog and digital) FM transmission.

## HD Receivers

The simultaneous transmission of the analog and digital signals in HD radio does not affect analog only radios (non HD radios). The analog radios will receive the entire RF signal but will only demodulate only the analog signal. However, an HD radio receiver will first try to lock to the analog signal. The HD radio will next try to lock to the FM stereo signal (for FM transmission) if present and will finally lock to the digital signal.

Philips Semiconductor has a high-performance AM/FM radio chip set that supports HD radio. A simplified block diagram of the HD radio is provided in Figure 35. The chip set includes a single-chip radio tuner (TEF 6721) for the

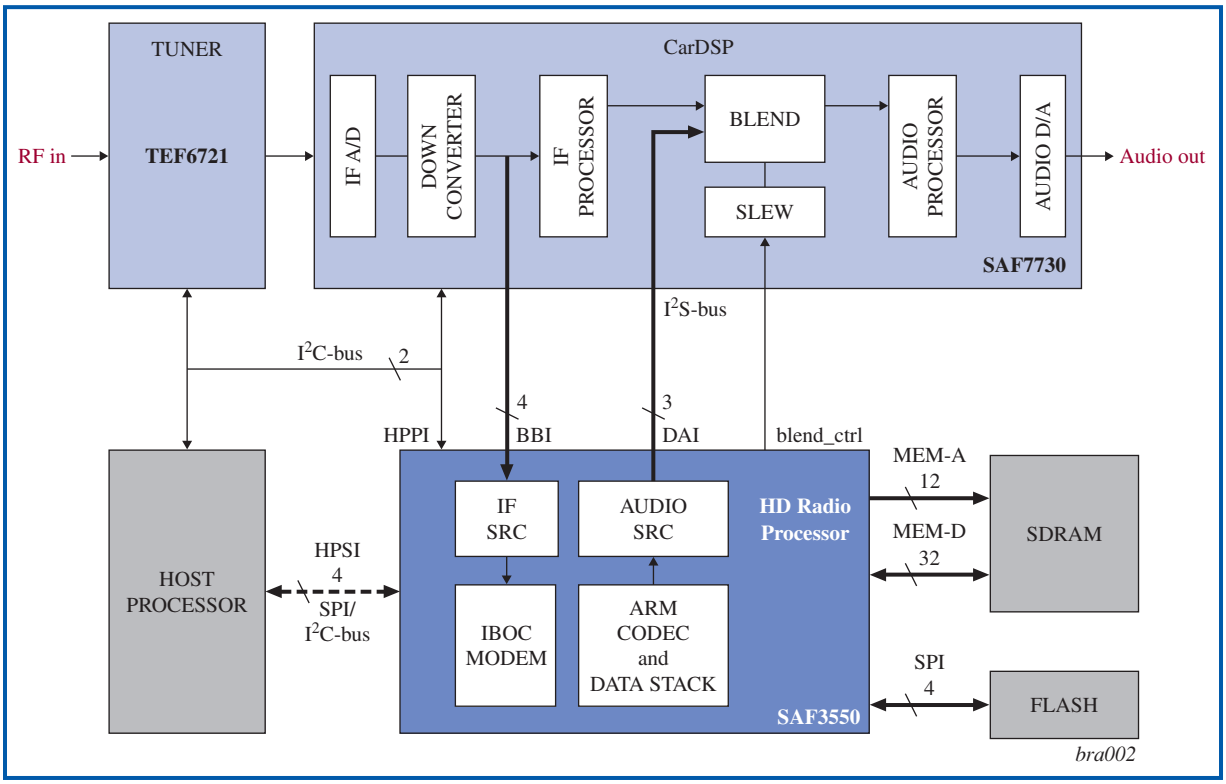


FIGURE 35 An HD radio–simplified system block diagram. (Courtesy Philips Semiconductor.)

reception of AM, FM, and FM IBOC RF signals. The TEF 6721 uses a 10/7 MHz IF for both AM and FM signals. The IF output of the TEF 6721 is fed to the IF a/D input of the SAF 7730. The SAF 7730 is a programmable DSP (digital signal processing) chip that performs digital audio processing. Additionally, this device incorporates multipath cancellation of RF signals. The IF output of the SAF 7730 feeds the IF input of the SAF 3550. The SAF 3550 is an HD radio processor that supports both hybrid and all-digital modes. The SAF 3550 outputs a signal to the SAF 7730 blend input for additional audio processing.

Another OFDM technique used in digital communication is **flash OFDM,** which is considered a spread-spectrum technology. A fast hopping technique is used to transmit each symbol over a different frequency. The frequencies are selected in a pseudorandom manner. In other words, the frequency selected appears to be totally random. This technique provides the advantages of CDMA but has the additional benefit of frequency diversity, which means that the OFDM signal is less susceptible to fading because the entire signal is spread over multiple subcarriers on a wide frequency range.

**Flash OFDM**
a spread-spectrum version of OFDM

The term used to describe OFDM with channel coding is called **COFDM**. Channel coding is used to minimize data errors in the data transmission process, COFDM is popular because it is resistant to multipath signal effects and was selected for DVB (digital video broadcasting) in Europe. The United States selected 8VSB for transmitting the digital television signal.

**COFDM**
OFDM with channel coding



## 5 Telemetry

**Telemetry** may be defined as remote metering. It is the process of gathering data on some particular phenomenon without the presence of human monitors. The gathered data may be recorded on chart recorders, tape recorders, or computer memory and then picked up at some convenient time. If the data are transmitted as a radio wave, it is called **radio telemetry.** This process started during World War II when telemetry systems were developed to obtain flight data from aircraft and missiles. It offered an alternative to having human observers on board when that was impractical or considered too dangerous. Besides the military applications, many new commercial uses are being developed. Today's telemetry markets range from remote reading of gas and electric meters to credit card validation, security monitoring, token-free highway toll systems, and remote inventory control.

**Telemetry**
remote metering; gathering data on some phenomenon without the presence of human monitors

**Radio Telemetry**
gathering data on some phenomenon without the presence of human monitors and transmitting the data to another site via radio

Since situations to be remotely metered invariably involve more than one measurement, the different signals are always multiplexed. This allows the use of a single transmitter/receiver and in fact was the first major use of multiplexing techniques. It was also the beginning of pulse modulation techniques because of the ease with which they can be multiplexed.

### Telemetry Block Diagram

A radio telemetry system block diagram is shown in Figure 36. The process begins with the system to be monitored. Transducers (sensors) convert from the entity to be measured to an electrical signal. Five transducer outputs are shown in Figure 36,

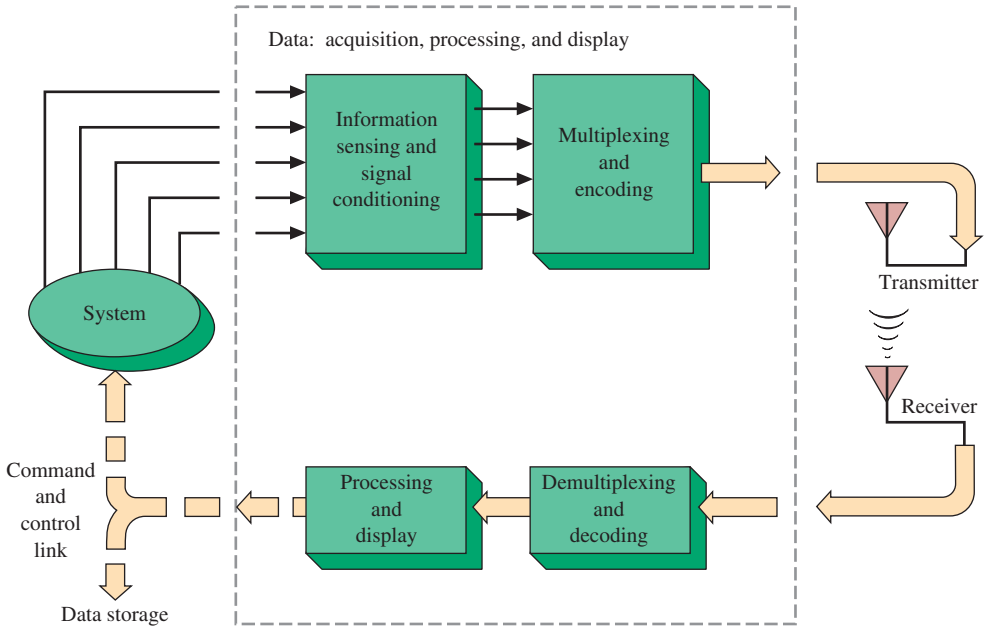


FIGURE 36 Radio-telemetry block diagram.

but sophisticated systems, such as a Mars exploration probe, may include hundreds of transmitted measurements. In any measurement system, stimuli such as temperature, pressure, movement, or acceleration must be converted to a form that can be processed electrically. While a mercury thermometer produces a good visual output of temperature, a thermistor or thermocouple transducer converts temperature to an electrical signal usable by a telemetry system.

Following the sensing, Figure 36 shows a signal-conditioning function. The outputs from the transducers will be electrical in nature but may not have much else in common. The outputs may be variable resistance, capacitance, inductance, voltage, or current of many different magnitudes. The conditioning circuits turn the raw data into uniform digestible information. Following conditioning, the signals are applied to the multiplexing and encoding block. They are then transmitted to the receiver for demultiplexing and decoding, followed by the processing and display function. Complex telemetry systems incorporate a computer for maximum efficiency in data processing. From this block a command and control link is shown in Figure 36 for those systems that send control signals back to the system under measurement. This may be done to change the performance to a desired level. This "completes the loop" except for the path to data storage shown in Figure 36.

## Typical Telemetry System

Telemetry systems may use FDM or TDM and in some cases both, as shown in Figure 37. In this instance, three wideband channels and six narrowband channels are provided. Many times there are some conditions that must be monitored more

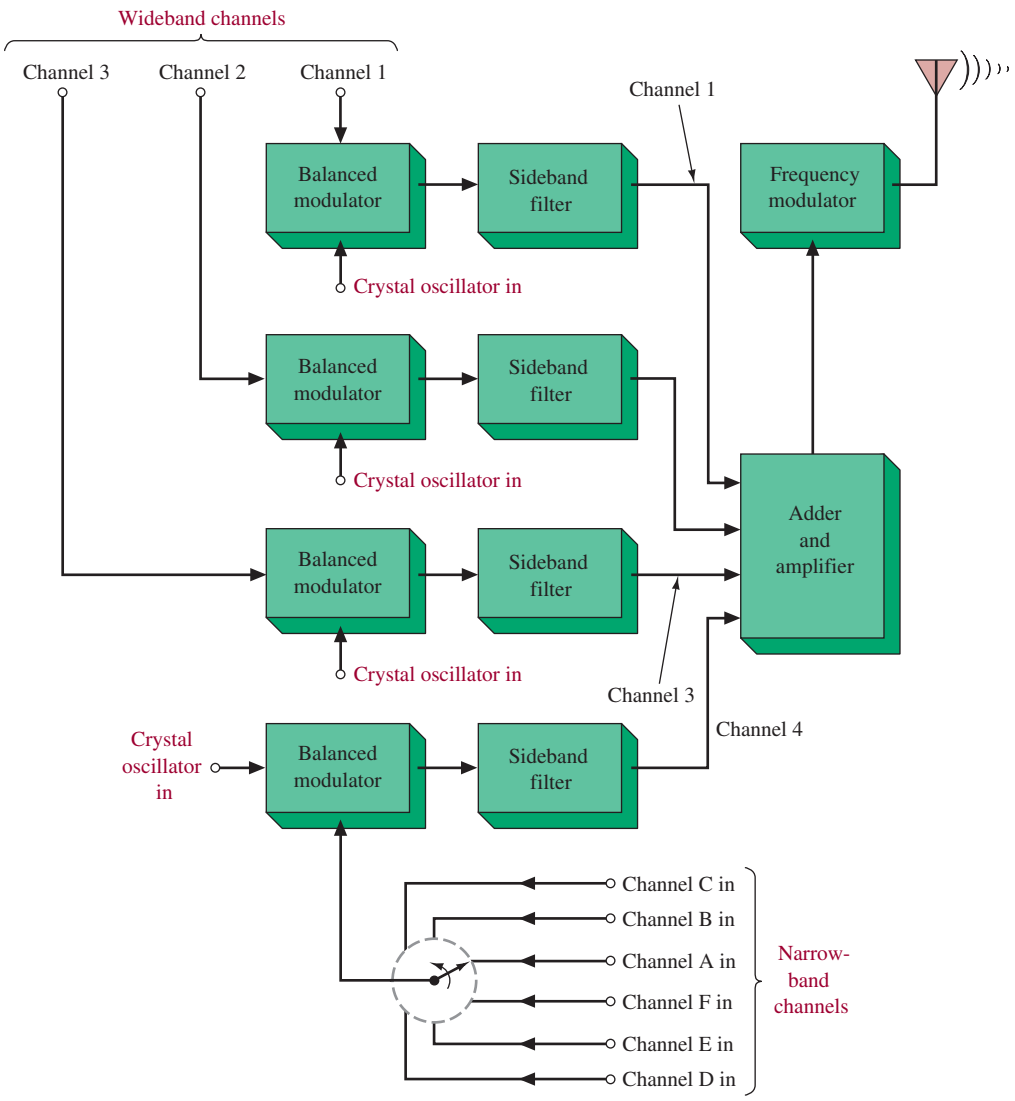


FIGURE 37 TDM and FDM telemetry transmitter system.

often than others. They are represented by channels 1, 2, and 3 in Figure 37. The six conditions that do not require rapid monitoring (subchannels *A* through *F*) are time-division-multiplexed (TDM) onto channel 4. They are referred to as subchannels because 6 of them make up one of the frequency-division-multiplexed (FDM) main channels. There are countless modulation combinations possible in radio telemetry. In the system illustrated in Figure 37, the subchannels are PCM-encoded to amplitude-modulate a subcarrier that is converted into SSB, which is used to frequency-modulate the main carrier. The three wideband channels use SSB directly to frequency-modulate the main carrier. This is termed a PCM/SSB/FM system. However, any other method is possible (and has probably been used), such as PAM/FM/FM, PWM/AM/FM, PPM/AM/AM, and so on.

## Radio-Telemetry System

A complete radio-telemetry system is shown in Figure 38. Part (a) of the figure shows the analog encoder that converts a 0- to 5-V analog signal into a digital pulse stream. The LM 325 IC shown within dashed lines illustrates a simple way this system can be used in a temperature-monitoring telemetry system. The LM 325 IC contains the temperature transducer and circuitry to provide the linear 0- to 5-V signal representing a range of temperatures.

In the encoder [Figure 38(a)], a current-source-fed integrating capacitor at the inverting input of $A_1$ (0.22 $\mu$F) generates a linear ramp that is compared with the input voltage by $A_1$, one section of a quad comparator. An offset voltage is summed with the input so that the circuit will generate a transmittable, nonzero signal for a ground-level input to $A_2$ and $A_3$. Comparator $A_3$ discharges the 0.22-$\mu$F integrating capacitor while $A_2$ provides a separate buffered output. When the ramp is reset, $A_1$ goes high. Because $A_1$ has an open-collector output, $A_2$ and $A_3$ do not see the change until $C_2$ has charged to 6 V. This delay assures that $C_1$ will be discharged on reset. The delay is short so that timing errors are not induced in the system. The encoder's output appears as a string of pulses that have cycle periods proportional to the input voltage (PWM).

The transmitter portion of the system is shown in Figure 38(b). It is based on the LM 1871 IC designed specifically for radio telemetry. The analog encoder's output signal modulates the transmitter's 49-MHz carrier. Coil $T_1$ must be trimmed for maximum RF output after the antenna length has been selected. A length of 2 ft is sufficient; shorter lengths will work, but with a reduced range. The transmit range is about 150 m but can be extended with additional power amplification.

The receiver [Figure 38(c)] contains a local oscillator, a mixer, a 455-kHz IF section, and digital detection and decoding circuitry. Receiver alignment is simple and does not require special equipment. The local-oscillator coil ($L_1$) is tuned while that section's output signal (pin 2) is viewed with a 10-pF or less oscilloscope probe. The coil is trimmed to the point just before that at which the waveform amplitude peaks and then disappears.

The antenna input transformer ($T_3$), mixer ($T_1$), and IF transformer ($T_2$) are adjusted by means of the companion transmitter and the intended receiving antenna. The internal automatic-frequency-control (AFC) circuitry is disabled by grounding pin 16. The 455-kHz IF output (pin 15) is adjusted for peak amplitude. The amplitude must remain below 400 mV p-p throughout the adjustment procedures to prevent clipping of the IF waveform. To control the amplitude, you must remove the transmitter's antenna and separate the transmitter and receiver to obtain a usable IF output level.

Once the first adjustment is complete, the scope should be connected to the unused $T_2$ secondary to prevent detuning. Transformers $T_1$, $T_2$, and $T_3$ should be trimmed for maximum waveform amplitude. This LM 1871 and 1872 system can handle more than one channel of telemetry data, as explained in the manufacturer's specifications and application notes.

In the analog decoder [Figure 38(d)] a reference-current source combines with an operational amplifier/integrator (LF356) to generate a second linear ramp. This signal is put into a sample-and-hold (S/H) circuit (LM396), which "looks" for a time specified by the incoming pulse string. A negative offset is also summed into the S/H input to correct for the voltage added during coding. Output pulses from the receiver trigger a dual one-shot (74LS123), which generates two successive

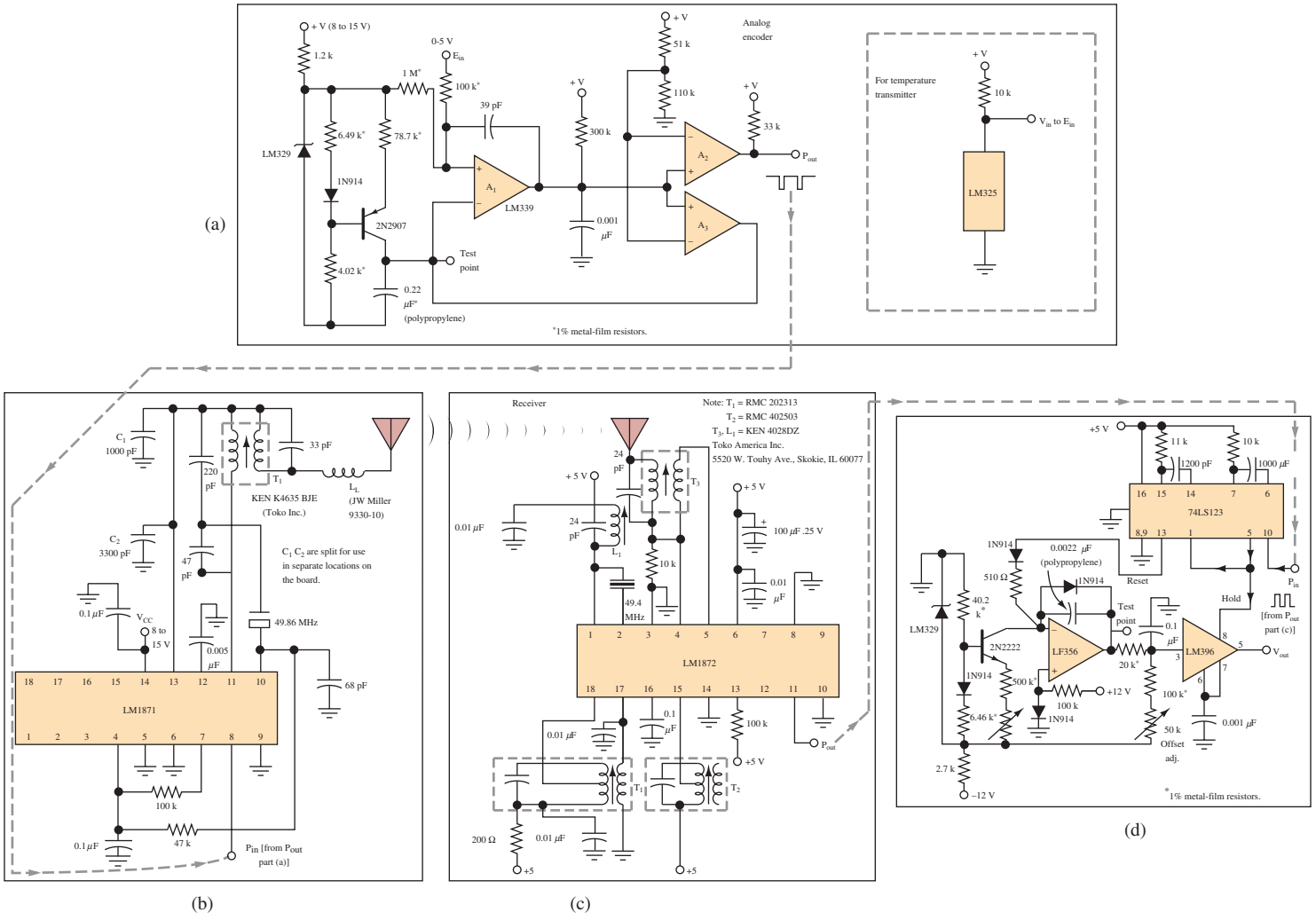


**FIGURE 38** Complete radio-telemetry system: (a) encoder, (b) transmitter, (c) receiver, (d) decoder. (Reprinted with permission from *Electronic Design*, Vol. 29, No. 10; copyright Hayden Publishing Co., Inc.)

pulses of approximately 5-$\mu$s duration. The first pulse triggers the S/H, and the second resets the integrator. The LM396 output is therefore a signal that is proportional to the pulse width from the receiver, as is desired. The gain and offset adjustments are somewhat interactive. With a two-point calibration, however, no more than three iterations should be needed.

With the addition of a 10-k$\Omega$ resistor and a two-terminal temperature sensor, the circuit can serve as a remote temperature transmitter, with the voltage output equaling 10 mV/K. The most significant contributor to circuit inaccuracy is the temperature coefficient of the integrating capacitors in the encoder and decoder circuitry. The circuits in Figures 38(a) and (d) use polypropylene capacitors with a temperature coefficient of approximately $-150$ ppm/°C. By paralleling capacitors with opposite temperature coefficients, the designer can reduce the temperature sensitivity of the circuitry by a factor of 5. A combination of silver–mica and polystyrene in a 3:1 ratio would have such an effect.

For analog data acquisition, RF telemetry presents an attractive alternative to the usual hard-wired approaches. The most common complications in analog data acquisition—source inaccessibility, the lack of practical line routes, and the need for nonstationary sensors—can be sidestepped. In addition, the RF route takes care of problems such as ground loops and wire losses.

A wide variety of uses with this system is possible, including the transmission of physiological data from human and animal subjects without the need for their confinement, the collection of data from rotating or otherwise moving machines without the need for brushes or slip rings, and wireless outdoor-to-indoor links for the collection of weather and other information.



## 6 TROUBLESHOOTING

The focus of this chapter has been on digital wireless communications. Probably one of the most visible and most widely used digital wireless communications devices today is the wireless telephone. This section focuses on the steps used by technicians to troubleshoot cellular telephone problems.

The first step when troubleshooting a cell phone problem is to collect information about the phone and the type of problems the customer is having. This is typically prepared in the form of a trouble ticket. For example, the customer may be losing calls or not getting messages. In addition to the customer's problems, information collected from the cell phone, which may be required, can include the following:

- *Electronic serial number (ESN):* a unique number assigned to a cell phone at the factory.
- *Mobile identification number (MIN):* a ten-digit number assigned by the seller. It identifies the cell phone within the cellular service provider's wireless network.
- *Master subsidy lock (MSL):* a proprietary code used to program a MIN into the phone. It is used when the phone is being serviced. Every ESN is assigned a unique MSL.

The MIN is programmed into the cell phone, using the MSL, when purchased. Access to viewing the codes varies for each cell phone manufacturer, but it is typically available via the cell phone's menu.

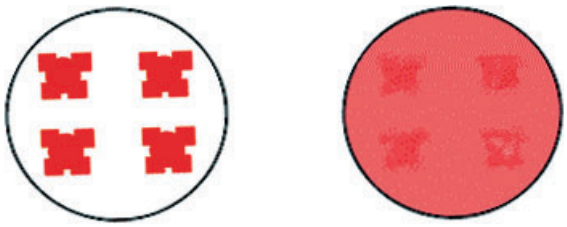

(a) dry (b) wet

FIGURE 39 The cell phone's water mark sticker: (a) without water damage and (b) discolored due to water damage.

It is common for cell phones to experience physical problems. Typical physical problems are LCD screen problems, button problems, evidence of something spilt on the cell phone, damage caused by dropping the phone, and water damage. Most of these problems are detected easily by a quick visual inspection of the cell phone. Water damage is also detected easily by the technician via a **water mark sticker** located in the battery compartment area. An example of a water mark sticker is provided in Figure 39. Figure 39(a) shows an undamaged water mark sticker, and Figure 39(b) shows a discolored water mark sticker due to water damage. An important note: the cell phone's warranty is typically voided if the water mark sticker has been removed.

**Water Mark Sticker**
a sticker used to detect water damage

Assuming the unit passes the physical inspection, the cell phone is checked to verify that the phone has the latest roaming list of available cell towers. This list is the **preferred roaming list (PRL).** A cell phone with an out-of-date PRL is subject to lost calls. This PRL should be upgraded anytime a phone is in for maintenance. The upgrade requires the new PRL file to be uploaded from a computer file into the cell phone. This upgrade is accomplished via a USB or an RS-232 serial interface connection and takes less than a minute. PRLs can also be updated over the air **(OTA)** if enabled by the service provider.

**Preferred Roaming List (PRL)**
the roaming list of available cell towers

**OTA**
over the air

In some cases, full diagnostics of a cell phone may be required. A CDMA tester is used to exercise fully the cell phone's operation. A block diagram of the CDMA test setup is provided in Figure 40. The CDMA tester provides the tests recommended by the cell phone manufacturer to test the operation. The mobile unit under test is inserted into the RF shield box and is connected to the tester. The **RF shield box** isolates the mobile unit under test (the cell phone being tested) from any possible RF interference from nearby cell towers or other interfering RF sources.

**RF Shield Box**
isolates the mobile unit under test from any possible interference from nearby towers

A CDMA tester typically provides support for a CDMA base station simulator, which is used to verify the functional aspects of the phone. The tester simulates call initiating and disconnect and voice quality checks (echo testing). The CDMA tester tests tuned channel power measurements that enable the system to verify maximum power and frequency error. The CDMA tester also verifies the mobile unit's

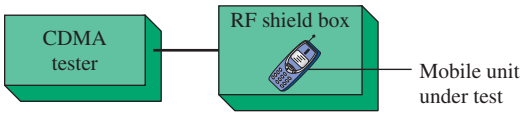


FIGURE 40 The test setup for the full CDMA diagnostics.

| Test | Measured | Lower Limit | Upper Limit | Pass/Fail |
|---|---|---|---|---|
| PCS US traffic channel = 325 | | | | |
| Called number 555-5555 | | | | |
| Origination successful | Yes | | | |
| Page successful | Yes | | | |
| CPD voice quality | 1 P/F | 1 P/F | 1 P/F | Pass |
| CDMA rho | 1.0 | .94 | 1 | Pass |
| CDMA frequency error | 4.0 Hz | −150 Hz | 150 Hz | Pass |
| CDMA static timing offset | −0.46 μs | −1 μs | 1 μs | Pass |
| CDMA sensitivity FER at −102 dBm | 0.0% | | .5 % | Pass |
| CDMA max RF output power | 24.3 dBm | 21 dBm | 30 dBm | Pass |

FIGURE 41 Example of Test Data Generated by a CDMA Test.

frame error rate (FER). This is a measure of the phone's ability to demodulate the received signal in a high noise environment. The test shown in Figure 41 shows a measured FER of 0.0 percent with an upper limit of .5 percent. The test also shows a maximum RF output power of 24.3 dBm.



## 7 Troubleshooting with Electronics Workbench™ Multisim

This chapter presented techniques for encoding digital data for transmission. In this exercise, you will have the opportunity to use Electronics Workbench™ Multisim to gain a better understanding of several important communication building blocks, including generation of a BPSK signal, a coherent carrier recovery circuit, a mixer, and recovering a BPSK encoded signal. The circuit used in this example is shown in Figure 39.

To begin this exercise, open the file **Fig10-42** at www.pearsoned.com/electronics. This circuit contains a BPSK generating circuit and a receiver based on the block diagrams provided in Figures 5 and 6.

A 1-kHz sine wave is used to simulate the carrier frequency. The 1-kHz sine wave is fed to an inverting operational amplifier with a gain of −1. The op amp provides a 180° phase shift of the sine wave. This result is shown in Figure 43.

Both phases of the sine-wave signal are fed into a 1-of-2 selector constructed with two analog switches. The control of the analog switches is provided by a 500-Hz square wave, which is used to represent the digital data. In this case, the digital data is an alternating 1 0 pattern. The square wave is inverted by the 74HC04 inverter, and the inverted and noninverted signals are used to select which phase is being output. Start the simulation and view the output of the BPSK generating circuit with oscilloscope XCS1. Notice that the phase is alternating, based on which analog switch is selected.

The BPSK generated signal is next input into a BPSK receiver that consists of a coherent carrier recovery circuit, a mixer or multiplier stage, and a low-pass filter. This circuit is discussed in Section 2. The BPSK received signal is connected

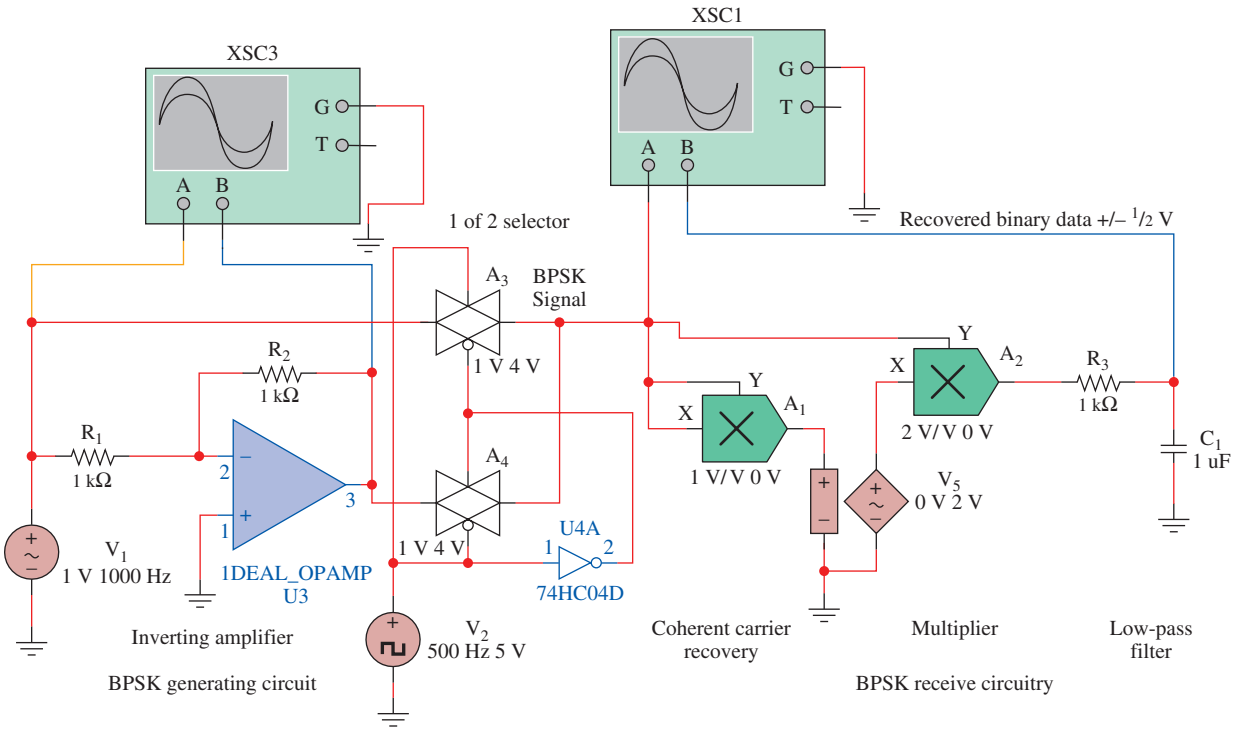


FIGURE 42 A BPSK transmit-receive circuit as implemented in Electronics Workbench™ Multisim.

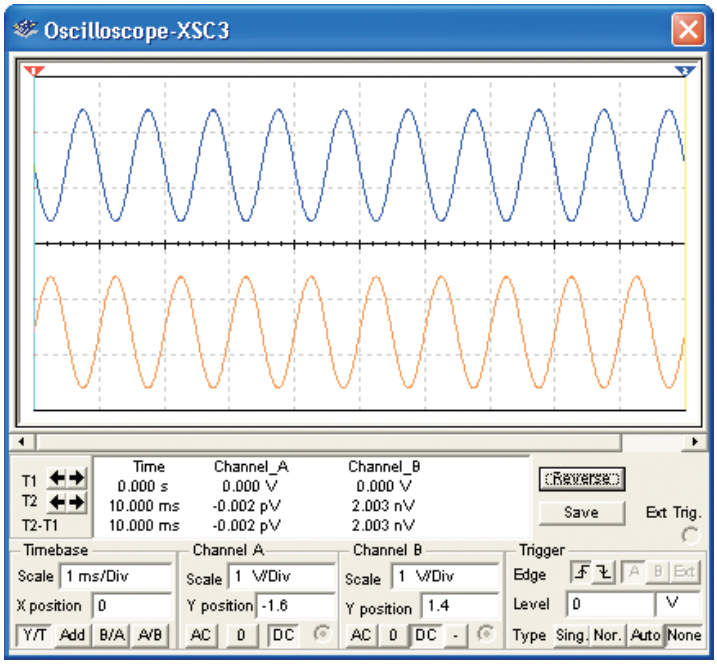


Ch A
1 kHz

Ch B
Phase-Shifted
1 kHz

FIGURE 43 The phase relationship for the input and output of an inverting amplifier.

to both inputs of a multiplier stage. The purpose of this circuit is to square the input signal so that only a $+\sin 2\omega t$ term is created. The $+\sin 2\omega t$ term indicates that the new signal, which is twice the original frequency, has been created and the new signal does not alternate-phase. Connect the oscilloscope to the output of the multiplier and you will observe that a 2-kHz signal has been generated. Why was a 2-kHz signal created? Recall that $(\sin A) \times (\sin B) = 0.5 \cos(A - B) - 0.5 \cos(A + B)$. For this example, the $A - B$ term (1 kHz − 1 kHz) will go to zero, whereas the $A + B$ term will equal 2 kHz.

The output of the multiplier is fed to a voltage-controlled oscillator, which has been set to output a 1-kHz signal. This circuit is being used to simulate a phase-locked-loop circuit, where the internal VCO on the PLL phase-locks to the 2-kHz signal and the output is preset to generate a 1-kHz sine wave.

The recovered carrier and the BPSK signal are both input into a multiplier. Once again, this is a $(\sin A) \times (\sin B)$ circuit. As mentioned in Section 2, the output of this circuit will be either

$$\sin A \times \sin A = 0.5 - 0.5 \cos(2A)$$

or

$$\sin A \times -\sin A = -0.5 + 0.5 \cos(2A)$$

The low-pass filter consisting of $R_3$ and $C_1$ (Figure 42) removes the high-frequency term, leaving only the $\pm 0.5$-V term. This result can be viewed by connecting the oscilloscope (XSC1) to the output of the recovery circuit. Notice in Figure 44 that the oscilloscope is showing a $\pm 0.5$-V output, which is exactly what was predicted. The output is changing with the change in phase of the BPSK signal.

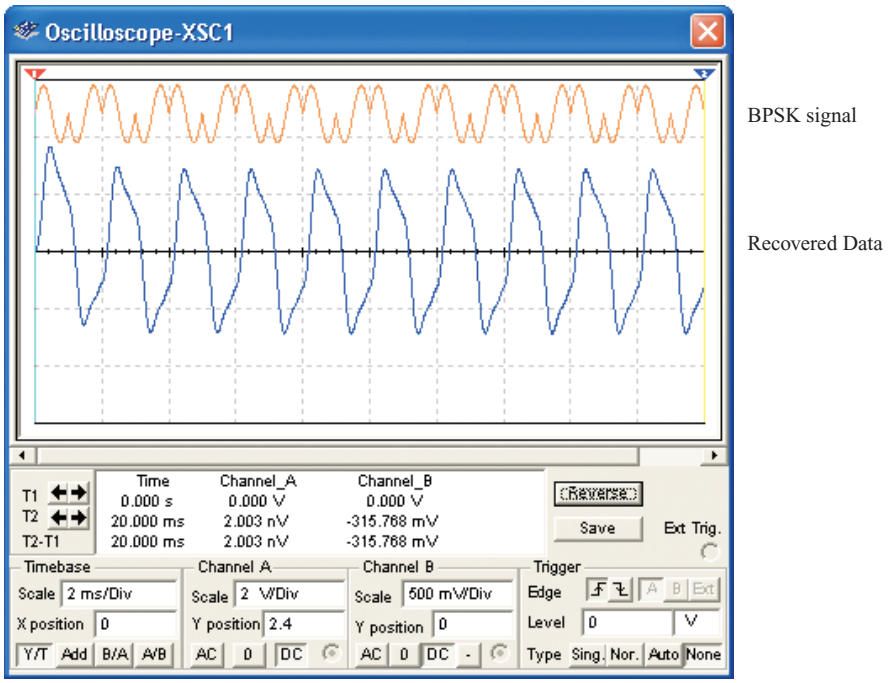


FIGURE 44 The oscilloscope view of the BPSK signal and the recovered data.

This exercise has demonstrated how a BPSK digital communications block can be constructed and analyzed using Electronics Workbench™ Multisim. Be sure to use the oscilloscope to verify that you have gained a complete understanding of the signal path for both the generating and receiver sides of a BPSK digital communications system. You will need a thorough understanding of this circuit to complete the Electronics Workbench™ Multisim exercises in this chapter.

## Electronics Workbench™ Exercises

1. Open the file **FigE10-1** at www.pearsoned.com/electronics. This circuit contains a fault. Troubleshoot the circuit to find the fault. When you find the fault, correct it and rerun the simulation to determine if the circuit is now working properly. If it is not, then continue troubleshooting the circuit. After you are done, explain your findings.
2. Open the file **FigE10-2** at www.pearsoned.com/electronics. This circuit contains a fault. Troubleshoot the circuit to find the fault. When you find the fault, correct it and rerun the simulation to determine if the circuit is now working properly. After you are done, explain your findings.
3. Use the hysteresis block provided in Electronics Workbench™ Multisim to provide level conversion of the output of the BPSK circuit provided in the file **Fig10-42.** Your modification should enable the receiver to output +5.0 V and 0.0 V for the ±0.2-V level provided from the output of the *R*C ($R_3$ and $C_1$) filter. (The solution can be found in **Fig10-42 solution.**)



## Summary

In this chapter, we examined various aspects of wireless digital communications transmission, including FSK, PSK, BPSK, QPSK, DPSK, frequency hopping, and direct sequence spread spectrum. The techniques of OFDM and radio telemetry were also examined. The major topics you should now understand include the following:

- the different digital modulation techniques used
- the analysis of data transmission techniques using FM/PM, including frequency and phase-shift keying
- the analysis of quadrature amplitude modulation (QAM), including constellation patterns, loopback, and eye tests
- the issues of PN sequence generation
- frequency hopping and direct sequence spread spectrum
- the spreading of the spread-spectrum signal
- the issues of OFDM transmission
- the basic concept of telemetry and a description of a complete radio-telemetry system



## Questions and Problems

### Section 1

1. Explain what is meant by the term *wireless*.



## Section 2

2. What is a frequency-shift-keying system? Describe two methods of generating FSK.
3. Explain how the FSK signal is detected.
4. Describe the PSK process.
5. What do the *M* and *n* represent in Table 1?
6. Explain a method used to generate BPSK using Figure 5 as a basis.
7. Describe a method of detecting the binary output for a BPSK signal using Figure 6 as a basis.
8. What is coherent carrier recovery?
9. Describe the recovery of QPSK using Figure 9 as a basis.
10. Provide a brief description of the QAM system. Explain why it is an efficient user of frequency spectrum.
11. Describe how to generate a constellation.
12. What is the purpose of any eye pattern?
13. The input data to a DPSK transmitter is 1 1 0 1. Determine the DPSK digital data stream and the DPSK RF output.

## Section 3

14. What is a PN code and why is it noiselike?
15. What does it mean to spread the RF signal?
16. What is the PN sequence length of a PN sequence generator with each of the following?
    (a) 4 shift registers
    (b) 9 shift registers
    (c) 23 shift registers
17. What does it mean for a PN sequence to be of maximal length?
18. Draw the circuit for a PN sequence generator with $n = 5$.
19. Explain the concept of frequency hopping spread spectrum.
20. Define *dwell time*.
21. Generate the shift-register contents for a PN sequence generator with $n = 3$ and a seed value of 1 0 1.
22. Define *code division multiple access*.
23. Define the term *hit* relative to spread spectrum.
24. What is a signature sequence?
25. Draw the block diagram of a DSSS transmit-receive system.
26. Determine the spreading of a DSSS signal if the chip rate is 1 Mbps and the modulation rate is 56 kbps.

## Section 4

27. Draw the block diagram of an OFDM transmission.
28. How does flash OFDM differ from OFDM?
29. Determine the received OFDM signal for the traces shown in Figure 45.
30. What is a hybrid AM or FM signal?
31. What is the digital data rate for AM digital and what is its comparable quality?
32. What is the digital data rate for FM digital and what is its comparable quality?
33. Draw a picture of the RF spectrum for (a) hybrid AM and (b) hybrid FM.
34. What technology does HD radio use to transport the digital signal?

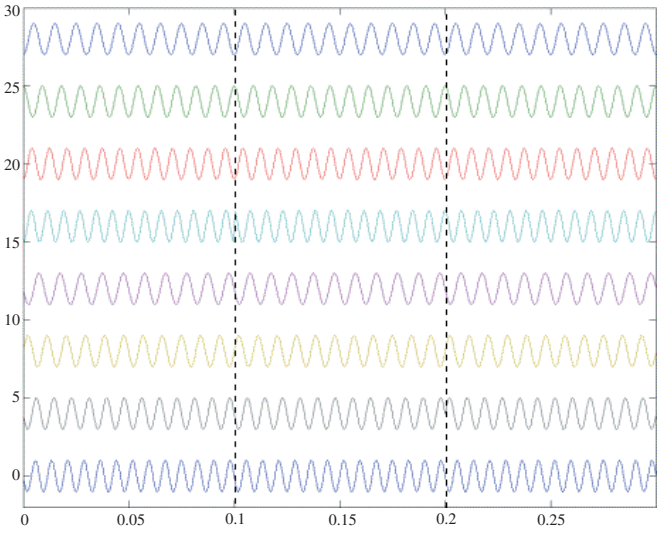


FIGURE 45 The OFDM traces for Problem 29.

## Section 5

35. What is the purpose of a telemetry system?
36. Explain why telemetry systems invariably use multiplexing and pulse modulation techniques.

## Questions for Critical Thinking

37. Why is OFDM not considered a true spread-spectrum system?
38. Determine the 7-bit code generated for the PN generator shown in Figure 17 if a seed value of 1 1 1 is used. What happens if a seed value of 0 0 0 is used?
39. Explain how it is possible for multiple CDMA communications devices to share the same RF spectrum.

*This page intentionally left blank*

# TRANSMISSION LINES

From *Modern Electronic Communication*, Ninth Edition, Jeffrey S. Beasley, Gary M. Miller. Copyright © 2008 by Pearson Education, Inc. Published by Prentice Hall. All rights reserved.

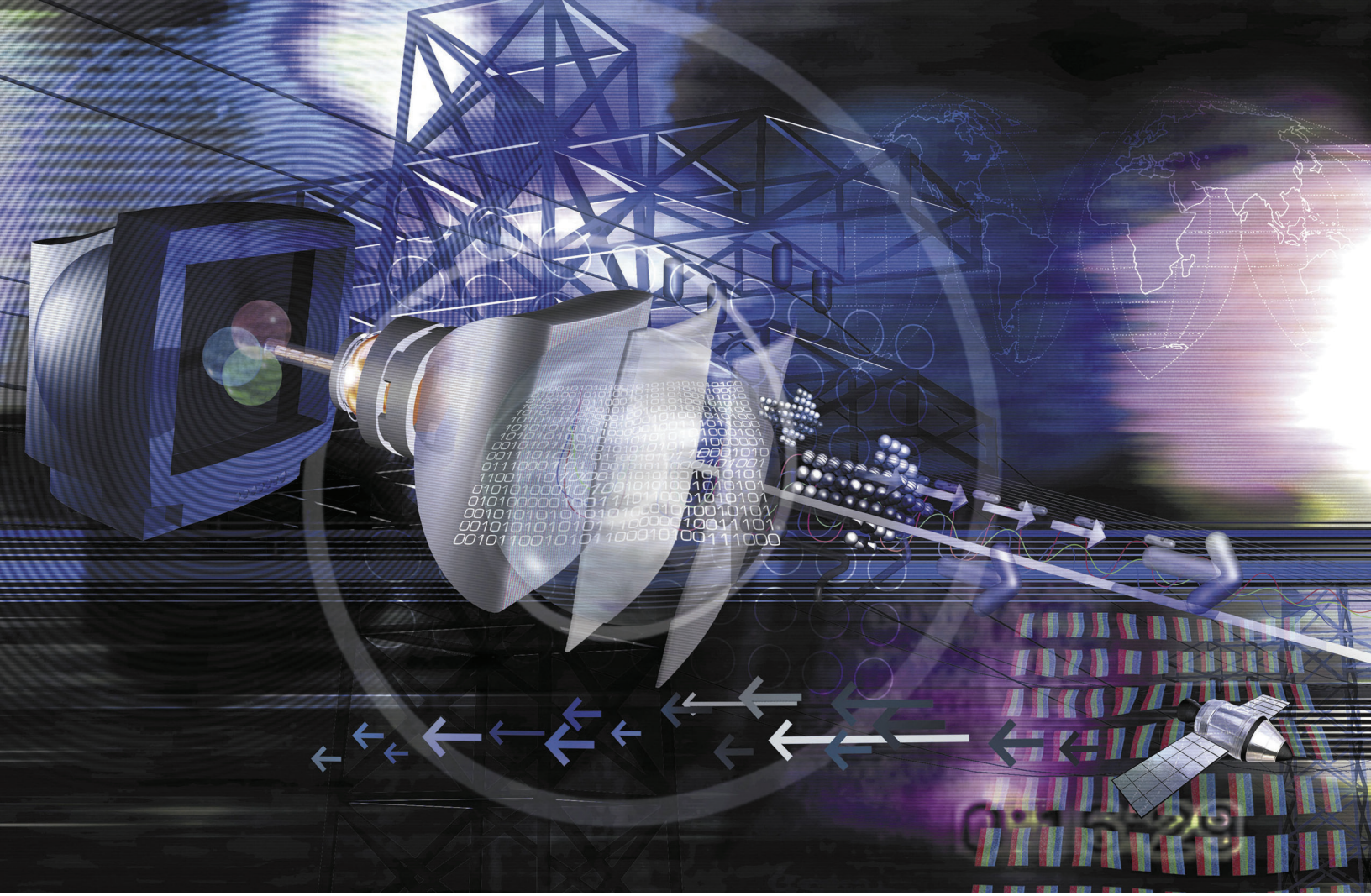

## Chapter Outline

1 Introduction
2 Types of Transmission Lines
3 Electrical Characteristics of Transmission Lines
4 Propagation of DC Voltage Down a Line
5 Nonresonant Line
6 Resonant Transmission Line
7 Standing Wave Ratio
8 The Smith Chart
9 Transmission Line Applications
10 Troubleshooting
11 Troubleshooting with Electronics Workbench™ Multisim

## Objectives

- Describe the operational characteristics of twisted-pair cable and its testing considerations
- Describe the physical characteristics of standard transmission lines and calculate $Z_0$
- Calculate the velocity of propagation and the delay factor
- Analyze wave propagation and reflection for various line configurations
- Describe how standing waves are produced and calculate the standing wave ratio
- Use the Smith chart to find input impedance and match loads to a line with matching sections and single-stub tuners
- Explain the use of line sections to simulate discrete circuitry
- Troubleshoot the location of a line break using TDR concepts

# TRANSMISSION LINES



An example of a microwave communications tower. (Courtesy of Standing Up for Standing Waves.)

## Key Terms

transmission line
CAT6/5e
RJ-45
attenuation
near-end crosstalk (NEXT)
crosstalk
ACR
delay skew
power-sum NEXT testing (PSNEXT)
return loss
unbalanced line
balanced line
common mode rejection
baluns
characteristic impedance
surge impedance
skin effect
velocity of propagation
delay line
velocity constant
velocity factor
wavelength
nonresonant line
traveling waves
resonant line
reflection
standing wave
voltage standing wave ratio
standing wave ratio
flat line
quarter-wavelength matching transformer
electrical length
Smith chart
normalizing
single-stub tuner
double-stub tuner
slotted line

## 1 Introduction

**Transmission Line**
the conductive connections between system elements that carry signal power

Transmission may take place via transmission lines, antennas, waveguides, or optical fibers. Sometimes a combination such as transmission line from transmitter to its antenna, to receiving antenna, to transmission line, and to receiver is used. A **transmission line** may be defined as the conductive connections between system elements that carry signal power. You may be thinking that if the wire connection between two points is a transmission line, why is a whole chapter of study required? It turns out that at very high frequencies, even simple wire connections start behaving in a peculiar fashion. What appears to be a short circuit may no longer be one. Or energy sent down the wire is reflected back. These phenomena and others form the basis of this chapter.

## 2 Types of Transmission Lines

### Two-Wire Open Line

One type of parallel line is the two-wire open line illustrated in Figure 1. This line consists of two wires that are generally spaced from $\frac{1}{4}$ to 6 in. apart. It is sometimes used as a transmission line between antenna and transmitter or antenna and receiver. An advantage of this type of line is its simple construction. Another type of parallel line is the twin lead or two-wire ribbon type. This line is illustrated in Figure 2. This line is essentially the same as the two-wire open line, except that uniform spacing is assured by embedding the two wires in a low-loss dielectric, usually polyethylene. The dielectric space between conductors is partly air and partly polyethylene.

### Twisted Pair

The twisted-pair transmission line is illustrated in Figure 3. As the name implies, the line consists of two insulated wires twisted to form a flexible line without the use of spacers. It is not used for high frequencies because of the high losses that occur in the rubber insulation. When the line is wet, the losses increase greatly. Local area networks (LANs) are often wired using unshielded twisted pair.

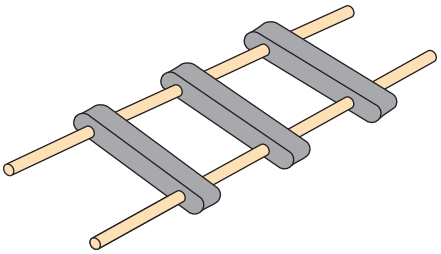

FIGURE 1 Parallel two-wire line.

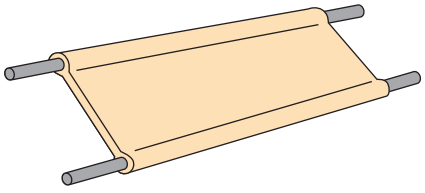

FIGURE 2 Two-wire ribbon-type lines.

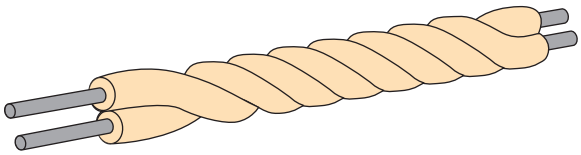

FIGURE 3 Twisted pair.

## Unshielded Twisted Pair (UTP)

Unshielded twisted-pair (UTP) cable is playing an increasingly important role in computer networking. The most common twisted-pair cable standard used for computer networking is UTP category 6 **(CAT6)** and 5e **(CAT5e),** which are cable-tested to provide the transmission of data rates up to 1000 Mbps for a maximum length of 100 m. CAT6/5e cable consists of four color-coded pairs of 22- or 24-gauge wires terminated with an **RJ-45** connector. The precise manner in which the twist of the cables is maintained, even at the terminations, provides a significant increase in signal-transmission performance. CAT5e standards allow 0.5 in. of untwisted conductors at the termination; CAT6 recommends about 3/8 in. untwisted. The balanced operation of the two wires per pair help to maintain the required level of performance in terms of crosstalk and noise rejection.

**CAT6/5e**
category 5e computer networking cable capable of handling a 1000 MHz bandwidth up to a length of 100 m

**RJ-45**
the four-pair termination commonly used for terminating CAT6/5e cable

The need for increased data rates is pushing the technology of twisted-pair cable to even greater performance requirements. The CAT6/5e designation is simply a minimum performance measurement of the cables. The cable must satisfy minimum **attenuation** loss and **near-end crosstalk (NEXT)** for a minimum frequency of 100 MHz. Attenuation loss defines the amount of loss in signal strength as it propagates down the wire. When current travels in a wire, an electromagnetic field is created. This field can induce a voltage in adjacent wires resulting in crosstalk.

**Attenuation**
the amount of loss in the signal strength as it propagates down a wire

**Crosstalk** is what you occasionally hear on the telephone when you can faintly hear another conversation. NEXT is a measure of the level of crosstalk, or signal coupling, within the cable. The measurement is called near-end testing because the receiver is more likely to pick up the crosstalk from the transmit to the receiver wire pairs at the ends. The transmit-signal levels at each end are strong, and the cable is more susceptible to crosstalk at this point. Additionally, the receive-signal levels have been attenuated due to normal cable path loss and are significantly weaker than the transmit signal. A high NEXT (dB) value is desirable. Near-end crosstalk is graphically depicted in Figure 4.

**Near-End Crosstalk (NEXT)**
a measure of the level of crosstalk or signal coupling within the cable, with a high NEXT (dB) value being desirable

**Crosstalk**
unwanted coupling caused by overlapping electric and magnetic fields

Manufacturers combine the two measurements of attenuation and crosstalk on data sheets and list this combined measurement as the attenuation-to-crosstalk ratio

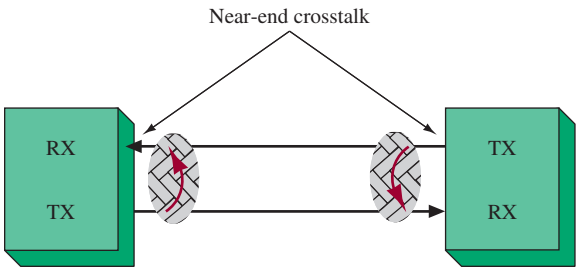


FIGURE 4 A graphical illustration of near-end crosstalk.

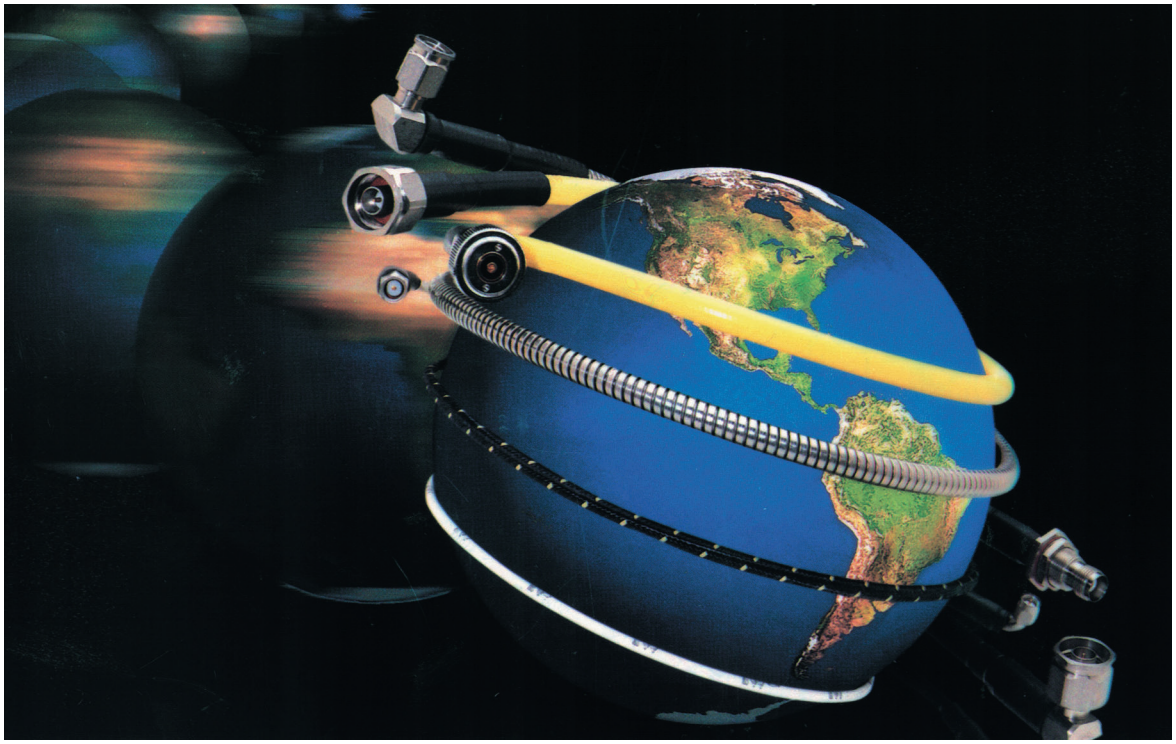

Transmission lines and connectors. (Courtesy of Insulated Wire Inc. Reprinted with permission.)

**ACR**
combined measurement of attenuation and crosstalk; a large ACR indicates greater bandwidth

**(ACR).** A larger ACR indicates that the cable has a greater data capacity. Essentially, ACR is a figure of merit for twisted-pair cable, where figure of merit implies a measure of the quality of the cable.

Wiring of the RJ-45 connector for RJ-45 CAT6/5e cable is defined by the Telecommunications Industry Association standard TIA568B. Within the TIA568B standard are the wiring guidelines T568A and T568B. These are shown in Table 1.

Table 2 lists the different categories, a description, and bandwidth for twisted-pair cable. Notice that CAT1, CAT2, and CAT4 are not listed. There never were CAT1 and CAT2 cable specifications, although you see them in many textbooks, handbooks, and on-line sources. The first CAT or category specification was for

**Table 1** T568A/T568B Wiring

| Wire Color | Pair | Pin No. T568A | Pin No. T568B |
|---|---|---|---|
| White/blue | 1 | 5 | 5 |
| Blue/white | 1 | 4 | 4 |
| White/orange | 2 | 3 | 1 |
| Orange/white | 2 | 6 | 2 |
| White/green | 3 | 1 | 3 |
| Green/white | 3 | 2 | 6 |
| White/brown | 4 | 7 | 7 |
| Brown/white | 4 | 8 | 8 |




The Fluke DTX CableAnalyzer™ Series. (Reproduced with permission of Fluke Corporation.)

CAT3. The CAT4 specification was removed from the TIA568B standard because it is an obsolete specification. CAT3 is still listed and is still used to a limited extent in telephone installations; however, modern telephone installations use CAT6/5e.

Enhanced data capabilities of twisted-pair cable include new specifications for testing **delay skew.** It is critical in high-speed data transmission that the data on the wire pair arrive at the other end at the same time. If the wire lengths of different wire pairs are significantly different, then the data on one wire pair will take longer to

**Delay Skew**
measure of the difference in time for the fastest to the slowest wire pair in a UTP cable

**Table 2** Different Categories for Twisted-Pair Cable, Based on TIA568B

| Category | Description | Bandwidth/Data Rate |
|---|---|---|
| Category 3 (CAT3) | Telephone installations Class C | Up to 16 Mbps |
| Category 5 (CAT5) | Computer networks Class D | Up to 100 MHz/100 Mbps for a 100-m length |
| Enhanced CAT5 (CAT5e) | Computer networks | 100-MHz/1000 Mbps applications with improved noise performance |
| Category 6 (CAT6) | Current standard for higher-speed computer networks Class E | Up to 250 MHz/1000 Mbps |
| Category 7 (CAT7) | Proposed standard for higher-speed computer networks Class F | Up to 600 MHz |

propagate along the wire, hence arriving at the receiver at a different time and potentially creating distortion of the data. Therefore, delay skew is a measure of the difference in time between the fastest and the slowest wire pair in a UTP cable. Additionally, the enhanced twisted-pair cable must meet four-pair NEXT requirements, which is called **power-sum NEXT (PSNEXT)** testing. Basically, power-sum testing measures the total crosstalk of all cable pairs. This test ensures that the cable can carry data traffic on all four pairs at the same time with minimal interference.

**Power-Sum NEXT Testing (PSNEXT)** measures the total crosstalk of all cable pairs to ensure that the cable can carry data traffic on all four pairs at the same time with minimal interference.

**Return Loss** a measure of the ratio of power transmitted into a cable to the amount of power returned or reflected

It has also been indicated that twisted pair can handle gigabit Ethernet networks at 100 m. The gigabit data-rate capability of twisted pair requires the use of all four wire pairs in the cable, with each pair handling 250 Mbps of data. The total bit rate is $4 \times 250$ Mbps, or 1 Gbps.

An equally important twisted-pair cable measurement is **return loss.** This provides a measure of the ratio of power transmitted into a cable to the amount of power returned or reflected. The signal reflection is due to impedance changes in the cable link and the impedance changes contributing to cable loss. Cables are not perfect, so there will always be some reflection. Examples of the causes for impedance changes are nonuniformity in impedance throughout the cable, the diameter of the copper, cable handling, and dielectric differences. Return-loss tests are now specified for qualifying CAT5/class D, CAT5e, and CAT6/class E twisted-pair links.

## Shielded Pair

The shielded pair, shown in Figure 5, consists of parallel conductors separated from each other, and surrounded by a solid dielectric. The conductors are contained within a copper braid tubing that acts as a shield. The assembly is covered with a rubber or flexible composition coating to protect the line from moisture or mechanical damage.

The principal advantage of the shielded pair is that the conductors are balanced to ground; that is, the capacitance between the cables is uniform throughout the length of the line. This balance is due to the grounded shield that surrounds the conductors with a uniform spacing along their entire length. The copper braid shield isolates the conductors from external noise pickup. It also prevents the signal on the shielded-pair cable from radiating to and interfering with other systems.

## Coaxial Lines

There are two types of coaxial lines: the rigid or air coaxial line, and the flexible or solid coaxial line. The electrical configuration of both types is the same; each contains two concentric conductors.

The rigid air coaxial line consists of a wire mounted inside, and coaxially with, a tubular outer conductor. This line is shown in Figure 6. In some applications the

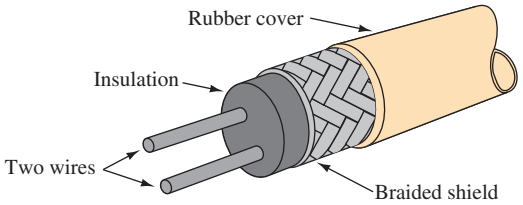


FIGURE 5 Shielded pair.

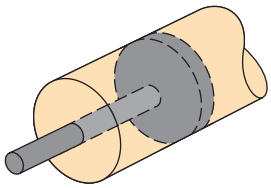

FIGURE 6 Air coaxial: cable with washer insulator.




Connectors for coaxial transmission lines. (Courtesy of KMW, Inc. Reprinted with permission.)

inner conductor is also tubular. The inner conductor is insulated from the outer conductor by insulating spacers, or beads, at regular intervals. The spacers are made of Pyrex, polystyrene, or some other material possessing good insulating characteristics and low loss at high frequencies.

The chief advantage of this type of line is its ability to minimize radiation losses. The electric and magnetic fields in the two-wire parallel line extend into space for relatively great distances, and radiation losses occur. No electric or magnetic fields extend outside the outer (grounded) conductor in a coaxial line. The fields are confined to the space between the two conductors; thus, the coaxial line is a perfectly shielded line. It is important, however, to have the connectors properly installed to avoid leakage. Noise pickup from other lines is also prevented.

This line has several disadvantages: it is expensive to construct, it must be kept dry to prevent excessive leakage between the two conductors, and although high-frequency losses are somewhat less than in previously mentioned lines, they are still excessive enough to limit the practical length of the line.

The condensation of moisture is prevented in some applications by the use of an inert gas, such as nitrogen, helium, or argon, pumped into the line at a pressure of from 3 to 35 psi. The inert gas is used to dry the line when it is first installed, and a pressure is maintained to ensure that no moisture enters the line.

Concentric cables are also made, with the inner conductor consisting of flexible wire insulated from the outer conductor by a solid, continuous insulating material. Flexibility may be gained if the outer conductor is made of braided wire, although this reduces the level of shielding. Early attempts at obtaining flexibility

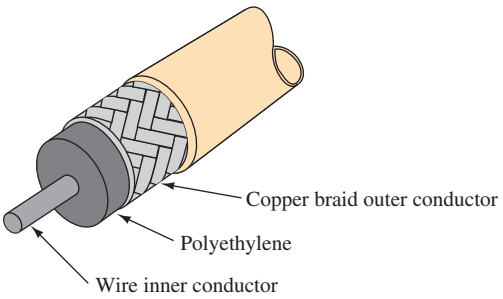


FIGURE 7 Flexible coaxial.

employed the use of rubber insulators between the two conductors. The use of rubber insulators caused excessive losses at high frequencies and allowed moisture-carrying air to enter the line, resulting in high leakage current and arc-over when high voltages were applied. These problems were solved by the development of polyethylene plastic, a solid substance that remains flexible over a wide range of temperatures. A coaxial line with a polyethylene spacer is shown in Figure 7. Polyethylene is unaffected by seawater, gasoline, oils, and liquids. High-frequency losses due to the use of polyethylene, although greater than the losses would be if air were used, are lower than the losses resulting from the use of most other practical solid dielectric material. Solid flexible coaxial transmission lines are the most frequently used type of transmission line. Teflon is also commonly used as the dielectric in transmission lines.

## Balanced/Unbalanced Lines

**Unbalanced Line**
the electrical signal in a coaxial line is carried by the center conductor with respect to the grounded outer conductor

**Balanced Line**
the same current flows in each wire but 180° out of phase

**Common Mode Rejection**
when signals that are 180° out of phase cancel each other

**Baluns**
circuits that convert between balanced and unbalanced operation

The electrical signal in a coaxial line is carried by the center conductor with respect to the grounded outer conductor. This is called an **unbalanced line.** Operation with the other types (two-wire open, twisted pair, shielded pair) is usually done with what is termed a **balanced line.** In it, the same current flows in each wire but 180° out of phase. Figure 8 shows the common technique for converting between unbalanced and balanced signals using a center-tapped transformer.

Any noise or unwanted signal picked up by the balanced line is picked up by both wires. Because these signals are 180° out of phase, they ideally cancel each other at the output center-tapped transformer. This is called **common mode rejection** (CMR). Practical common mode rejection ratio (CMRR) figures are 40–70 dB. In other words, the undesired noise or signal picked up by a two-wire balanced line is attenuated by 40–70 dB.

Circuits that convert between balanced and unbalanced operation are called **baluns.** The center-tapped transformers in Figure 8 are therefore baluns. In Section 9, a balun using just a section of transmission line will be introduced.

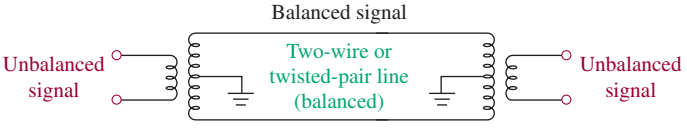


FIGURE 8 Balanced/unbalanced conversion.



# 3 Electrical Characteristics of Transmission Lines

## Two-Wire Transmission Line

The end of a two-wire transmission line that is connected to a source is ordinarily called the *generator end* or *input end*. The other end of the line, if connected to a load, is called the *load end* or *receiving end*.

The electrical characteristics of the two-wire transmission line depend primarily on the construction of the line. Because the two-wire line can be viewed as a long capacitor, the change of its capacitive reactance is noticeable as the frequency applied to it is changed. Because the long conductors have a magnetic field about them when electrical energy is being passed through them, the properties of inductance are also observed. The values of the inductance and capacitance present depend on various physical factors, and the effects of the line's associated reactances also depend on the frequency applied. No dielectric is perfect (electrons manage to move from one conductor to the other through the dielectric), so there is a conductance value for each type of two-wire transmission line. This conductance value will represent the value of current flow that may be expected through the insulation. If the line is uniform (all values equal at each unit length), one small section of the line may be represented as shown in Figure 9. Such a diagram may represent several feet of line.

In many applications, the values of conductance and resistance are insignificant and may be neglected. If they are neglected, the circuit appears as shown in Figure 10. Notice that this network is *terminated* with a resistance that represents the impedance of the infinite number of sections exactly like the section of line under consideration. The termination is considered to be a load connected to the line.

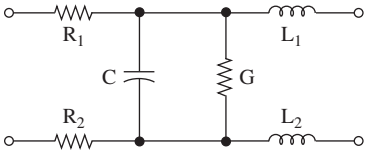


$L_1$ = inductance of top wire
$L_2$ = inductance of bottom wire
$R_1$ = resistance of top wire
$R_2$ = resistance of bottom wire
G = conductance between wires
C = capacitance between wires

FIGURE 9 Equivalent circuit for a two-wire transmission line.

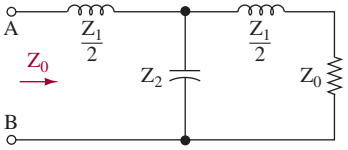


FIGURE 10 Simplified circuit terminated with its characteristic impedance.

## Characteristic Impedance

A line infinitely long can be represented by an infinite number of inductors and capacitors. If a voltage is applied to the input terminals of the line, current would begin to flow. Because there are an infinite number of these sections of line, the

current would flow indefinitely. If the infinite line were uniform, the impedance of each section would be the same as the impedance offered to the circuit by any other section of line of the same unit length. Therefore, the current would be of some finite value. If the current flowing in the line and the voltage applied across it are known, the impedance of the infinite line could be determined by using Ohm's law. This impedance is called the **characteristic impedance** of the line. The symbol used to represent the characteristic impedance is $Z_0$. If the characteristic impedance of the line could be measured at any point on the line, it would be found to be the same. The characteristic impedance is sometimes called the **surge impedance.**

**Characteristic Impedance**
the input impedance of a transmission line either infinitely long or terminated in a pure resistance exactly equal to its characteristic impedance

**Surge Impedance**
another name for characteristic impedance

In Figure 10 the distributed inductance of the line is divided equally into two parts in the horizontal arms of the T. The distributed capacitance is lumped and shown connected in the central leg of the T. The line is terminated in a resistance equal to that of the characteristic impedance of the line as seen from terminals *AB*. The reasons for using this value of resistive termination will be fully explained in Section 6. Because the circuit in Figure 10 is nothing more than a series–parallel *LCR* circuit, the impedance of the network may be determined by the formula that will now be developed.

The impedance, $Z_0$, looking into terminals *AB* of Figure 10 is

$$Z_0 = \frac{Z_1}{2} + \frac{Z_2[(Z_1/2) + Z_0]}{Z_2 + (Z_1/2) + Z_0} \tag{1}$$

Simplifying yields

$$Z_0 = \frac{Z_1}{2} + \frac{(Z_1Z_2/2) + Z_0Z_2}{Z_2 + (Z_1/2) + Z_0} \tag{2}$$

Expressing the right-hand member in terms of the least common denominator, we obtain

$$Z_0 = \frac{Z_1Z_2 + (Z_1^2/2) + Z_1Z_0 + (2Z_1Z_2/2) + 2Z_0Z_2}{2[Z_2 + (Z_1/2) + Z_0]} \tag{3}$$

If both sides of this equation are multiplied by the denominator of the right-hand member, the result is

$$2Z_2Z_0 + \frac{2Z_1Z_0}{2} + 2Z_0^2 = Z_1Z_2 + \frac{Z_1^2}{2} + Z_1Z_0 + \frac{2Z_1Z_2}{2} + 2Z_0Z_2 \tag{4}$$

Simplifying gives us

$$2Z_0^2 = 2Z_1Z_2 + \frac{Z_1^2}{2} \tag{5}$$

or

$$Z_0^2 = Z_1Z_2 + \left(\frac{Z_1}{2}\right)^2 \tag{6}$$

If the transmission is to be accurately represented by an equivalent network, the T-network section of Figure 10 must be replaced by an infinite number of similar sections. Thus, the distributed inductance in the line will be divided into $n$ sections, instead of the number (2) as indicated in the last term of Equation (6). As the number of sections approaches infinity, the last term $Z_1/n$ will approach zero. Therefore,

$$Z_0 = \sqrt{Z_1 Z_2} \tag{7}$$

Because the term $Z_1$ represents the inductive reactance and the term $Z_2$ represents the capacitive reactance,

$$Z_0 = \sqrt{2\pi fL \times \frac{1}{2\pi fC}}$$

and

$$Z_0 = \sqrt{\frac{L}{C}} \tag{8}$$

The derivation resulting in Equation (8) shows that a line's characteristic impedance depends on its inductance and capacitance.

## Example 1

*A commonly used coaxial cable, RG-8A/U, has a capacitance of 29.5 pF/ft and inductance of 73.75 nH/ft. Determine its characteristic impedance for a 1-ft section and for a length of 1 mi.*

### Solution

For the 1-ft section,

$$Z_0 = \sqrt{\frac{L}{C}} \tag{8}$$

$$= \sqrt{\frac{73.75 \times 10^{-9}}{29.5 \times 10^{-12}}} = \sqrt{2500} = 50\ \Omega$$

For the 1-mi section,

$$Z_0 = \sqrt{\frac{5280 \times 73.75 \times 10^{-9}}{5280 \times 29.5 \times 10^{-12}}} = \sqrt{\frac{5280}{5280} \times 2500} = 50\ \Omega$$

Example 1 shows that the line's characteristic impedance is independent of length and is in fact a *characteristic* of the line. The value of $Z_0$ depends on the ratio of the distributed inductance and the capacitance in the line. An increase in the separation of the wires increases the inductance and decreases the capacitance. This effect takes place because the effective inductance is proportional to the flux that may be established between the two wires. If the two wires carrying current in opposite directions are placed farther apart, more magnetic flux is included between

them (they cannot cancel their magnetic effects as completely as if the wires were closer together), and the distributed inductance is increased. The capacitance is lowered if the plates of the capacitor (the plates are the two conducting wires) are more widely spaced.

Thus, the effect of increasing the spacing of the two wires is to increase the characteristic impedance because the $L/C$ ratio is increased. Similarly, a reduction in the diameter of the wires also increases the characteristic impedance. The reduction in the size of the wire affects the capacitance more than the inductance because the effect is equivalent to decreasing the size of the plates of a capacitor to decrease the capacitance. Any change in the dielectric material between the two wires also changes the characteristic impedance. If a change in the dielectric material increases the capacitance between the wires, the characteristic impedance, by Equation (8), is reduced.

The characteristic impedance of a two-wire line may be obtained from the formula

$$Z_0 \simeq \frac{276}{\sqrt{\epsilon}} \log_{10} \frac{2D}{d} \tag{9}$$

where $D$ = spacing between the wires (center to center)
$d$ = diameter of one of the conductors
$\epsilon$ = dielectric constant of the insulating material relative to air

The characteristic impedance of a concentric or coaxial line also varies with $L$ and $C$. However, because the difference in construction of the two lines causes $L$ and $C$ to vary in a slightly different manner, the following formula must be used to determine the characteristic impedance of the coaxial line:

$$Z_0 \simeq \frac{138}{\sqrt{\epsilon}} \log_{10} \frac{D}{d} \tag{10}$$

where $D$ = inner diameter of the outer conductor
$d$ = outer diameter of the inner conductor
$\epsilon$ = dielectric constant of the insulating material relative to air

The relative dielectric constant of air is 1; polyethylene, 2.3; and teflon, 2.1.

**Example 2**

*Determine the characteristic impedance of*
*(a) A parallel wire line with $D/d = 2$ with air dielectric.*
*(b) An air dielectric coaxial line with $D/d = 2.35$.*
*(c) RG-8A/U coaxial cable with $D = 0.285$ in. and $d = 0.08$ in. It uses a polyethylene dielectric.*

**Solution**

(a)
$$Z_0 \simeq \frac{276}{\sqrt{\epsilon}} \log_{10} \frac{2D}{d} \tag{9}$$
$$\simeq \frac{276}{1} \log_{10} 4$$
$$\simeq 166\ \Omega$$

(b)
$$Z_0 \simeq \frac{138}{\sqrt{\epsilon}} \log_{10} \frac{D}{d} \quad \textbf{(10)}$$
$$\simeq \frac{138}{1} \log_{10} 2.35$$
$$\simeq 51.2\ \Omega$$

(c)
$$Z_0 \simeq \frac{138}{\sqrt{2.3}} \log_{10} \frac{0.285}{0.08}$$
$$\simeq 50\ \Omega$$

It's important that coaxial cable not be stepped on, crimped, or bent in too small a radius. Any of these conditions changes the $D/d$ ratio and therefore changes $Z_0$. As you'll see from following discussions, this causes problems with respect to circuit operation.

## Transmission Line Losses

Whenever the electrical characteristics of lines are explained, the lines are often thought of as being loss-free. Although this allows for simple and more readily understood explanations, the losses in practical lines cannot be ignored. There are three major losses that occur in transmission lines: copper losses, dielectric losses, and radiation or induction losses.

The resistance of any conductor is never zero. When current flows through a transmission line, energy is dissipated in the form of $I^2R$ losses. A reduction in resistance will minimize the power loss in the line. The resistance is indirectly proportional to the cross-sectional area. Keeping the line as short as possible will decrease the resistance and the $I^2R$ loss. The use of a wire with a large cross-sectional area is also desirable; however, this method has its limitations due to the resulting cost increases.

**Skin Effect**
the tendency for high-frequency electric current to flow mostly near the surface of the conductive material

At high frequencies the $I^2R$ loss is mainly due to the **skin effect.** When a dc current flows through a conductor, the movement of electrons through its cross section is uniform. The situation is somewhat different when ac is applied.

The flux density at the center of a conductor is greater than at the outer edge. Therefore, the inductance and inductive reactance are greater, causing lower current in the center and more along the outer edge. This effect increases with frequency. Forcing current to the edge effectively reduces the conductor's cross-sectional area in which current can flow and, because resistance is inversely proportional to cross-sectional area, the resistance increases. This increase in resistance is called skin effect. At very high frequencies, skin effect is so great that wires can no longer be used to carry current and we must resort to waveguides.

Dielectric losses are proportional to the voltage across the dielectric. They increase with frequency and, when coupled with skin effect losses, limit most practical operation to a maximum frequency of about 18 GHz. These losses are lowest when air dielectric lines are used. In many cases the use of a solid dielectric is required, for example, in the flexible coaxial cable, and if losses are to be minimized, an insulation with a low dielectric constant is used. Polyethylene allows the construction of a flexible cable whose dielectric losses, though higher than air, are still much lower than the losses that occur with other types of low-cost dielectrics. Because $I^2R$ losses and dielectric losses are proportional to length, they are usually

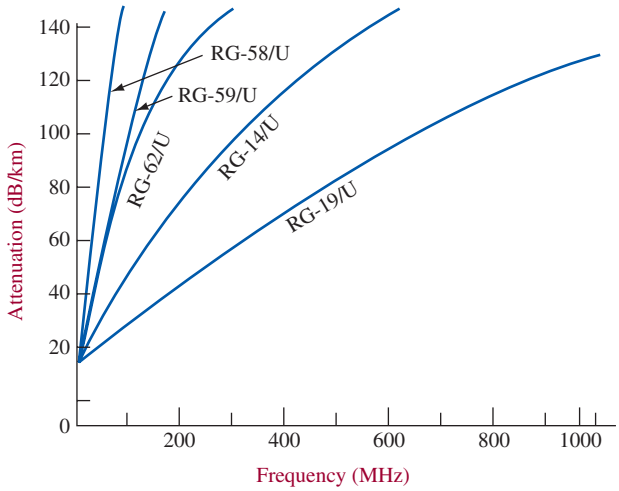


FIGURE 11 Line attenuation characteristics.

lumped together and expressed in decibels of loss per meter. The loss versus frequency effects for some common lines are shown in Figure 11.

The electrostatic and electromagnetic fields that surround a conductor also cause losses in transmission lines. The action of the electrostatic fields is to charge neighboring objects, while the changing magnetic field induces an electromagnetic force (EMF) in nearby conductors. In either case, energy is lost.

Radiation and induction losses may be greatly reduced by terminating the line with a resistive load equal to the line's characteristic impedance and by proper shielding of the line. Proper shielding can be accomplished by the use of coaxial cables with the outer conductor grounded. The problem of radiation loss is of consequence, therefore, only for parallel wire transmission lines.



## 4 Propagation of DC Voltage Down a Line

### Physical Explanation of Propagation

To understand the characteristics of a transmission line with an ac voltage applied, the infinitely long transmission line will first be analyzed with a dc voltage applied. This will be accomplished using a circuit like the one illustrated in Figure 12. In this circuit the resistance of the line is not shown. The line is assumed to be loss-free.

Considering only the capacitor $C_1$ and the inductor $L_1$ as a series circuit, when voltage is applied to the network, capacitor $C_1$ has the ability to charge through inductor $L_1$. It is characteristic of an inductor that at the first instant of time when voltage is applied, a maximum voltage is developed across it and minimum current is permitted to pass through it. At the same time, the capacitor has a minimum of voltage across it and passes a maximum current. The maximum current is not permitted to flow at the first instant because of the action of the inductor, which is in the charge path of the capacitor. At this instant the voltage across points $c$ and $d$ is zero. Because the remaining portion of the line is connected to points $c$ and $d$, 0 V

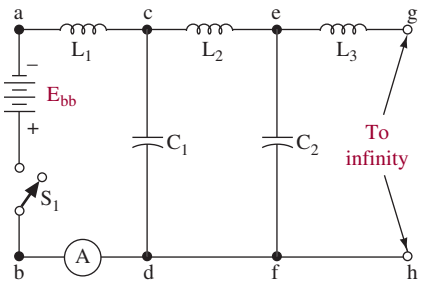


FIGURE 12 DC voltage applied to a transmission line.

is developed across it at the first instant of time. The voltage across the rest of the line is dependent on the charging action of the capacitor, $C_1$. Some finite amount of time is required for capacitor $C_1$ to charge through inductor $L_1$. As capacitor $C_1$ is charging, the ammeter records the changing current. When $C_1$ charges to a voltage that is near the value of the applied voltage, capacitor $C_2$ begins to charge through inductors $L_1$ and $L_2$. The charging of capacitor $C_2$ again requires time. In fact, the time required for the voltage to reach points *e* and *f* from points *c* and *d* is the same time as was necessary for the original voltage to reach points *c* and *d*. This is true because the line is uniform, and the values of the reactive components are the same throughout its entire length. This action continues in the same manner until all of the capacitors in the line are charged. Because the number of capacitors in an infinite line is infinite, the time required to charge the entire line would be an infinite amount of time. It is important to note that current is flowing continuously in the line and that it has some finite value.

## Velocity of Propagation

When a current is moving down the line, its associated electric and magnetic fields are said to be *propagated* down the line. Time is required to charge each unit section of the line, and if the line were infinitely long, it would require an infinitely long time to charge. The time for a field to be propagated from one point on a line to another may be computed because if the time and the length of the line are known, the **velocity of propagation** may be determined. The network shown in Figure 13 is the circuit that will be used to compute the time required for the voltage wave-front to pass a section of line of specified length. The total charge ($Q$) in coulombs on capacitor $C_1$ is determined by the relationship

**Velocity of Propagation**
the speed at which an electrical signal moves through a conductor

$$Q = Ce \tag{11}$$

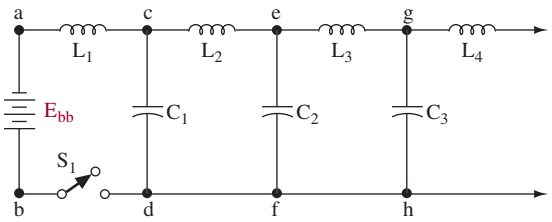


FIGURE 13 Circuit for computing time of travel.

Because the charge on the capacitor in the line had its source at the battery, the total amount of charge removed from the battery will be equal to

$$Q = it \tag{12}$$

Because these charges are equal, they may be equated:

$$Ce = it \tag{13}$$

As the capacitor $C_1$ charges, capacitor $C_2$ contains a zero charge. Because capacitor $C_1$'s voltage is distributed across $C_2$ and $L_2$, at the same time the charge on $C_2$ is practically zero, the voltage across $C_1$ (points $c$ and $d$ ) must be, by Kirchhoff's law, entirely across $L_2$. The value of the voltage across the inductor is given by

$$e = L\frac{\Delta i}{\Delta t} \tag{14}$$

Because current and time start at zero, the change in time and the change in current are equal to the final current and the final time. Equation (14) becomes

$$et = Li \tag{15}$$

Solving the equation for $i$, we have

$$i = \frac{et}{L} \tag{16}$$

Solving the equation that was a statement of the equivalency of the charges for current [Equation (13)], we obtain

$$i = \frac{Ce}{t} \tag{17}$$

Equating both of these expressions yields

$$\frac{et}{L} = \frac{Ce}{t} \tag{18}$$

Solving the equation for $t$ gives us

$$t^2 = LC$$

or

$$t = \sqrt{LC} \tag{19}$$

Because velocity is a function of both time and distance ($V = d/t$), the formula for computing propagation velocity is

$$V_P = \frac{d}{\sqrt{LC}} \tag{20}$$

where $V_p$ = velocity of propagation
$d$ = distance of travel
$\sqrt{LC}$ = time ($t$)



Delay lines. (Courtesy of E/Z Form Cable Corp. Reprinted with permission.)

It should again be noted that the time required for a wave to traverse a transmission line segment depends on the value of $L$ and $C$ and that these values will be different, depending on the type of the transmission line considered.

## Delay Line

The velocity of electromagnetic waves through a vacuum is the speed of light, or $3 \times 10^8$ m/s. It is just slightly reduced for travel through air. It has just been shown that a transmission line decreases this velocity because of its inductance and capacitance. This property is put to practical use when we want to delay a signal by some specific amount of time. A transmission line used for this purpose is called a **delay line.**

**Delay Line**
a length of a transmission line designed to delay a signal from reaching a point by a specific amount of time

### Example 3

*Determine the amount of delay and the velocity of propagation introduced by a 1-ft section of RG-8A/U coaxial cable used as a delay line.*

#### Solution

From Example 1, we know that this cable has a capacitance of 29.5 pF/ft and inductance of 73.75 nH/ft. The delay introduced by 1 ft of this line is

$$t = \sqrt{LC} \tag{19}$$
$$= \sqrt{73.75 \times 10^{-9} \times 29.5 \times 10^{-12}}$$
$$= 1.475 \times 10^{-9}\,\text{s} \qquad \text{or} \qquad 1.457\ \text{ns}$$

The velocity of propagation is

$$V_p = \frac{d}{\sqrt{LC}} \tag{20}$$

$$= \frac{1 \text{ ft}}{1.475 \text{ ns}} = 6.78 \times 10^8 \text{ ft/s} \qquad \text{or} \qquad 2.07 \times 10^8 \text{ m/s}$$

**Velocity Constant**
ratio of actual velocity to velocity in free space

**Velocity Factor**
another name for velocity constant

Example 3 showed that the energy velocity for RG-8A/U cable is roughly two-thirds the velocity of light. This ratio of actual velocity to the velocity in free space is termed the **velocity constant** or **velocity factor** of a line. It can range from about 0.55 up to 0.97, depending on the type of line, the *D/d* ratio, and the type of dielectric. As an approximation for non-air-dielectric coaxial lines, the velocity factor, $v_f$, is

$$v_f \simeq \frac{1}{\sqrt{\epsilon_r}} \tag{21}$$

where $v_f$ = velocity factor
$\epsilon_r$ = relative dielectric constant

$$\epsilon_r \text{ (RG } - \text{ 8A/U)} \simeq 2.3$$

**Example 4**

*Determine the velocity factor for RG-8A/U cable by using the results of Example 3 and also by using Equation (21).*

**Solution**

From Example 3, the velocity was $2.07 \times 10^8$ m/s. Therefore,

$$v_f = \frac{2.07 \times 10^8 \text{ m/s}}{3 \times 10^8 \text{ m/s}} = 0.69$$

Using Equation (21), we obtain

$$v_f \simeq \frac{1}{\sqrt{\epsilon_r}} = \frac{1}{\sqrt{2.3}} = 0.66$$

## Wavelength

**Wavelength**
the distance traveled by a wave during a period of one cycle

A wave that is radiated through space travels at about the speed of light, or 186,000 mi/s ($3 \times 10^8$ m/s). The velocity of this wave is constant regardless of frequency, so that the distance traveled by the wave during a period of one cycle (called one **wavelength**) can be found by the formula

$$\lambda = \frac{c}{f} \tag{22}$$

where $\lambda$ (the Greek lowercase letter lambda, used to symbolize wavelength) is the distance in meters from the crest of one wave to the crest of the next, $f$ is the frequency, and $c$ is the velocity of the radio wave in meters per second. It should be noted that the wavefront travels more slowly on a wire than it does in free space.

**Example 5**

*Determine the wavelength (λ) of a 100-MHz signal in free space and while traveling through an RG-8A/U coaxial cable.*

**Solution**

In free space, the wave's velocity ($c$) is $3 \times 10^8$ m/s. Therefore,

$$\lambda = \frac{c}{f} \tag{22}$$
$$= \frac{3 \times 10^8 \text{ m/s}}{1 \times 10^8 \text{ Hz}} = 3 \text{ m}$$

*Note:* The free-space wavelength is typically labeled $\lambda_0$. In RG-8A/U cable we found in Example 3 that the velocity of propagation is $2.07 \times 10^8$ m/s. Therefore,

$$\lambda = \frac{c}{f} \tag{22}$$
$$= \frac{2.07 \times 10^8 \text{ m/s}}{1 \times 10^8 \text{ Hz}} = 2.07 \text{ m}$$

Example 5 shows that line wavelength is less than free-space wavelength for any given frequency signal.



# 5 Nonresonant Line

## Traveling DC Waves

**Nonresonant Line**
one of infinite length or that is terminated with a resistive load equal in ohmic value to its characteristic impedance

**Traveling Waves**
voltage and current waves moving through a transmission line

A **nonresonant** line is defined as one of infinite length or one that is terminated with a resistive load equal in ohmic value to the characteristic impedance of the line. In a nonresonant line, all of the energy transferred down the line is absorbed by the load resistance and any inherent resistance in the line. The voltage and current waves are called **traveling waves** and move in phase with one another from the source to the load.

Because the nonresonant line may be either an infinite line or one terminated in its characteristic impedance, the physical length is not critical. In the resonant line that will be discussed shortly, the physical length of the line is quite important.

The circuit in Figure 14 shows a line terminated with a resistance equal to its characteristic impedance. The charging process and the ultimate development of a voltage across the load resistance will now be described. At the instant switch $S_1$ is closed, the total applied voltage is felt across inductor $L_1$. After a very short time has elapsed, capacitor $C_1$ begins to assume a charge. $C_2$ cannot charge at this time because all the voltage felt between points $c$ and $d$ is developed across inductor $L_2$ in the same way the initial voltage was developed across inductor $L_1$. Capacitor $C_2$ is unable to charge until the charge on $C_1$ approaches the amplitude of the supply voltage. When this happens, the voltage charge on capacitor $C_2$ begins to rise. The voltage across capacitor $C_2$ will be felt between points $e$ and $f$. Because the load resistor is also effectively connected between points $e$ and $f$, the voltage across the resistor is equal to the voltage appearing across $C_2$. The voltage input has been

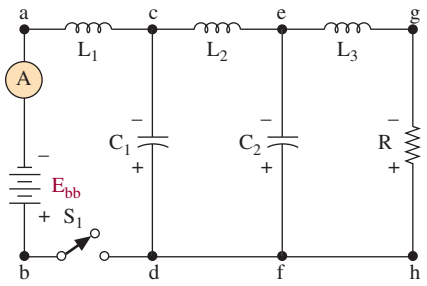


FIGURE 14 Charged nonresonant line.

transferred from the input to the load resistor. While the capacitors were charging, the ammeter recorded a current flow. After all of the capacitors are charged, the ammeter will continue to indicate the load current that will be flowing through the dc resistance of the inductors and the load resistor. The current will continue to flow as long as switch $S_1$ is closed. When it is opened, the capacitors discharge through the load resistor in much the same way as filter capacitors discharge through a bleeder resistor.

## Traveling AC Waves

There is little difference between the charging of the line when an ac voltage is applied to it and when a dc voltage is applied. The charging sequence of the line with an ac voltage applied will now be discussed. Refer to the circuit and waveform diagrams in Figure 15.

As the applied voltage begins to go positive, the voltage wave begins traveling down the line. At time $t_3$, the first small change in voltage arrives at point *A*, and the voltage at that point starts increasing in the positive direction. At time $t_5$, the same voltage rise arrives at point *B*, and at time $t_7$, the same voltage rise arrives at the end of the line. The waveform has moved down the line as a wavefront. The time required for the voltage changes to move down the line is the same as the time required for the dc voltage to move down the same line. The time for both of these waves to move down the line for a specified length may be computed by using Equation (19). The following general remarks concerning the ac charging of the line may now be made. All of the instantaneous voltages produced by the generator travel down the line in the order in which they were produced. If the voltage waveform is plotted at any point along the line, the resulting waveform will be a duplicate of the generator waveform. Because the line is terminated with its characteristic impedance, all of the energy produced by the source is absorbed by the load impedance.



## 6 Resonant Transmission Line

**Resonant Line**
a transmission line terminated with an impedance that is not equal to its characteristic impedance

A **resonant line** is defined as a transmission line that is terminated with an impedance that is *not* equal to its characteristic impedance. Unlike the nonresonant line, the length of the resonant line is critical. In some applications, the resonant line may be terminated in either an open or a short. When this occurs, some very interesting effects may be observed.

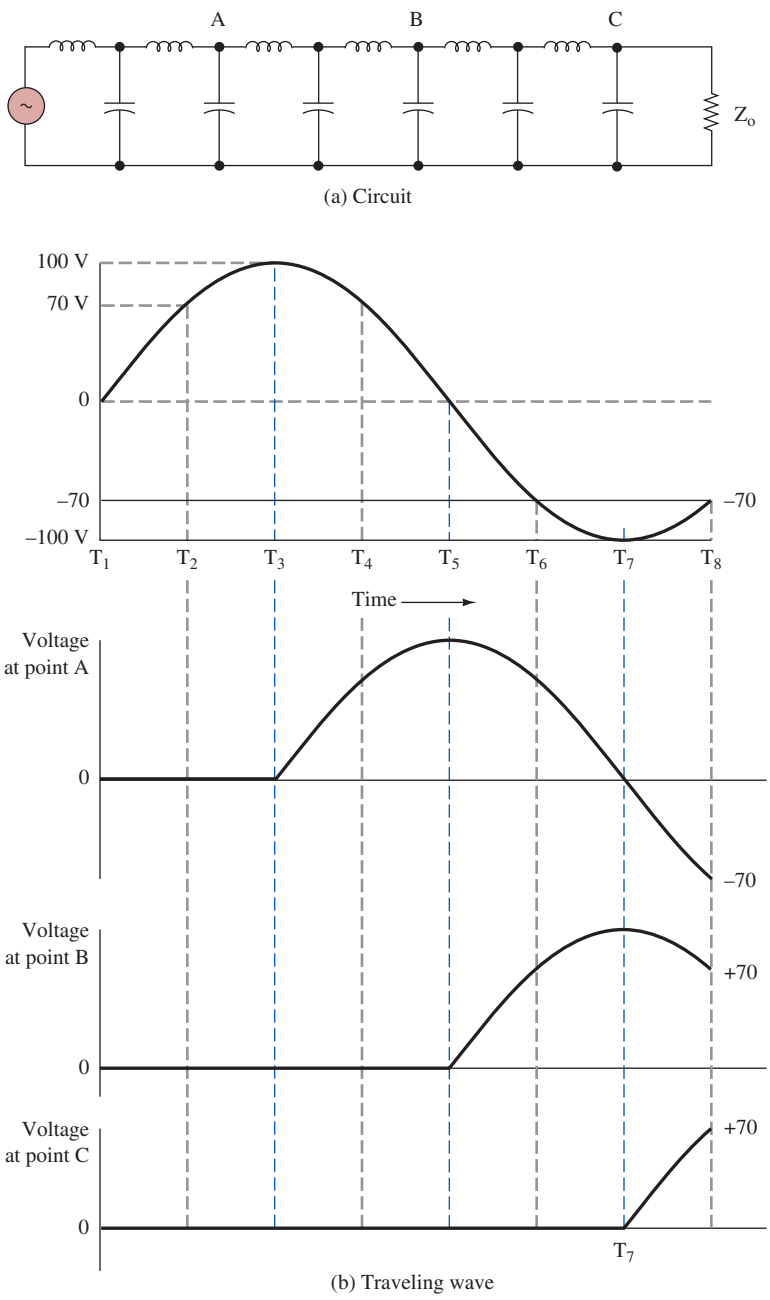


FIGURE 15 Alternating-current charging analysis.

## DC Applied to an Open-Circuited Line

A transmission line of finite length terminated in an open circuit is illustrated in Figure 16. The characteristic impedance of the line may be assumed to be equal to the internal impedance of the source. Because the impedance of the source is equal to the impedance of the line, the applied voltage is divided equally between the

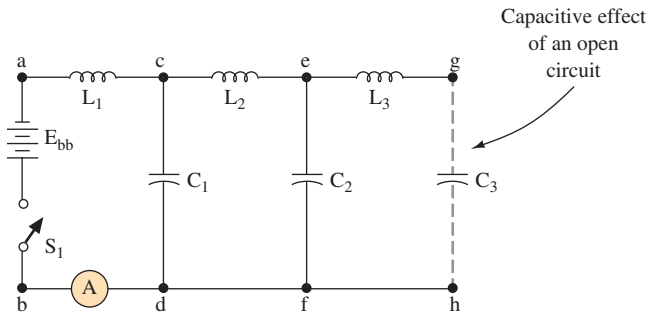


FIGURE 16 Open-ended transmission line.

impedance of the source and the impedance of the line. When switch $S_1$ is closed, current begins to flow as the capacitors begin to charge through the inductors. As each capacitor charges in turn, the voltage will move down the line. As the last capacitor is charged to the same voltage as every other capacitor, there will be no difference in potential between points *e* and *g*. This is true because the capacitors possess exactly the same charge. The inductor $L_3$ is also connected between points *e* and *g*. Because there is no difference in potential between points *e* and *g*, there can no longer be current flow through the inductor. This means that the magnetic field about the inductor is no longer sustained. The magnetic field must collapse. It is characteristic of the field about an inductor to tend to keep current flowing in the same direction when the magnetic field collapses. This additional current must flow into the capacitive circuit of the open circuit, $C_3$. Because the energy stored in the magnetic field is equal to that stored in the capacitor, the charge on capacitor $C_3$ doubles. The voltage on capacitor $C_3$ is equal to the value of the applied voltage. Because there is no difference of potential between points *c* and *e*, the magnetic field about inductor $L_2$ collapses, forcing the charge on capacitor $C_2$ to double its value. The field about inductor $L_1$ also collapses, doubling the voltage on $C_1$. The combined effect of the collapsing magnetic field about each inductor in turn causes a voltage twice the value of the original apparently to move back toward the source. This voltage movement in the opposite direction caused by the conditions just described is called **reflection.** The reflection of voltage occurred in the same polarity as the original charge. Therefore, it is said of a transmission line terminated in an open that the reflected voltage wave is always of the same polarity and amplitude as the incident voltage wave. When this reflected voltage reaches the source, the action stops because of the cancellation of the voltages. The current, however, is reflected back with an opposite polarity because when the field about the inductor collapsed, the current dropped to zero. As each capacitor is charged, causing the reflection, the current flow in the inductor that caused the additional charge drops to zero. When capacitor $C_1$ is charged, current flow in the circuit stops, and the line is charged. It may also be said that the line now "sees" that the impedance at the receiving end is an open.

**Reflection**
abrupt reversal in direction of voltage and current

## Incident and Reflected Waves

The situation for a 100-V battery with a 50-Ω source resistance is illustrated in Figure 17. The battery is applied to an open-circuited 50-Ω characteristic

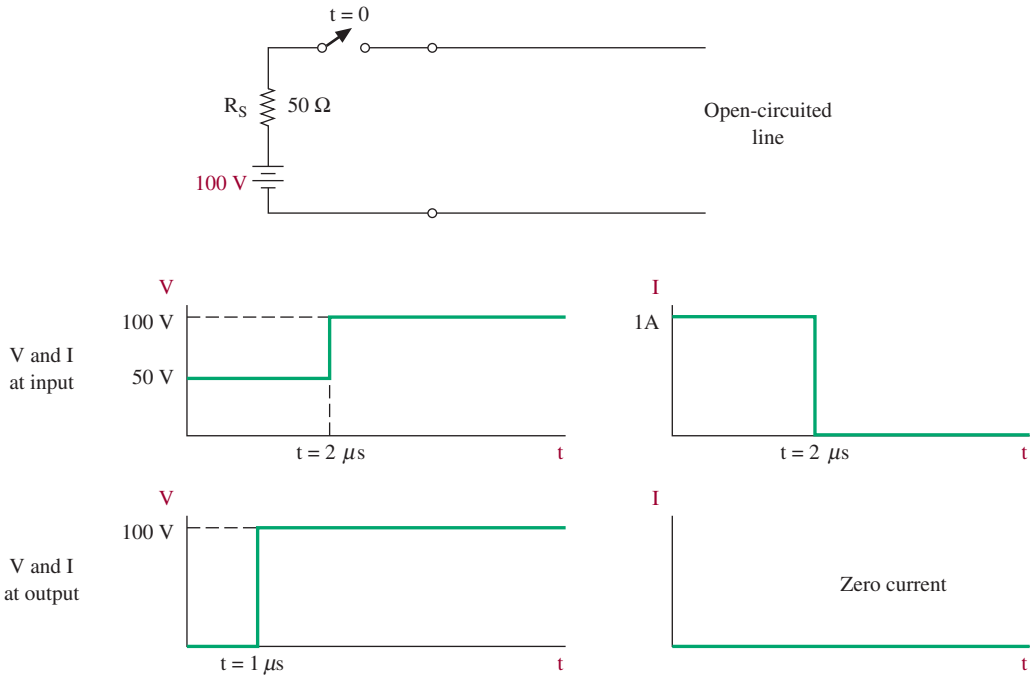


**FIGURE 17** Direct current applied to an open-circuited line.

impedance line at time $t = 0$. Initially, a 50-V level propagates down the line, and 1 A is drawn from the battery. Notice that 50 V is dropped across $R_s$ at this point in time. The reflected voltage from the open circuit is also 50 V so that the resultant voltage along the line is 50 V + 50 V, or 100 V, once the reflection gets back to the battery. If it takes 1 $\mu$s for energy to travel the length of this transmission line, the voltage at the line's input will initially be 50 V until the reflection gets back to the battery at $t = 2$ $\mu$s. Remember, it takes 1 $\mu$s for the energy to get to the end of the line and then 1 $\mu$s additional for the reflection to get back to the battery. Thus, the voltage versus time condition shown in Figure 16 for the line's input is 50 V until $t = 2$ $\mu$s, when it changes to 100 V. The voltage at the load is zero until $t = 1$ $\mu$s, as shown, when it jumps to 100 V due to the 50 V just reaching it and the resulting 50-V reflection.

The current conditions on the line are also shown in Figure 17. The incident current is 1 A, which is 100 V $\div$ ($R_s + Z_0$). The reflected current for an open-circuited line is out of phase and, therefore, is $-1$ A with a resultant of 0 A. The current at the line's input is 1 A until $t = 2$ $\mu$s, when the reflected current reaches the source to cancel the incident current. After $t = 2$ $\mu$s, the current is therefore zero. The current at the load is always zero because, when the incident 1 A reaches the load, it is immediately canceled by the reflected $-1$ A.

Thus, after 1 $\mu$s at the load and after 2 $\mu$s at the source, the results are predicted by standard analysis; that is, the voltage on an open-circuited wire is equal to the source voltage, and the current is zero. Unfortunately, when ac signals are applied to a transmission line, the results are not so simple because the incident and reflected signals occur on a continuous repetitive basis.

## DC Applied to a Short-Circuited Line

The condition of applying a 100-V, 50-Ω source resistance battery to a shorted 50-Ω transmission line is illustrated in Figure 18. Once again, assume that it takes 1 $\mu$s for energy to travel the length of the line. A complete analysis as presented with the open-circuited line would now be repetitive. Instead, only the differences and final results will be provided.

When the incident current of 1 A [100 V ÷ ($R_s$ + $Z_0$)] reaches the short-circuited load, the reflected current is 1 A and in phase so that the load current becomes 1 A + 1 A = 2 A. The incident voltage (+50 V) is reflected back out of phase (−50 V) so that the resultant voltage at the short circuit is zero, as it must be across a short. The essential differences here from the open-circuited line are:

1. The voltage reflection from an open circuit is in phase, while from a short circuit it is out of phase.
2. The current reflection from an open circuit is out of phase, while from a short circuit it is in phase.

The resultant load voltage is therefore always zero, as it must be across a short circuit, and is shown in Figure 18. However, the voltage at the line's input is initially +50 V until the reflected out-of-phase level (−50 V) gets back in 2 $\mu$s, which causes the resultant to be zero. The load current is zero until $t$ = 1 $\mu$s, when the incident and reflected currents of +1 A combine to cause 2 A of current to flow.

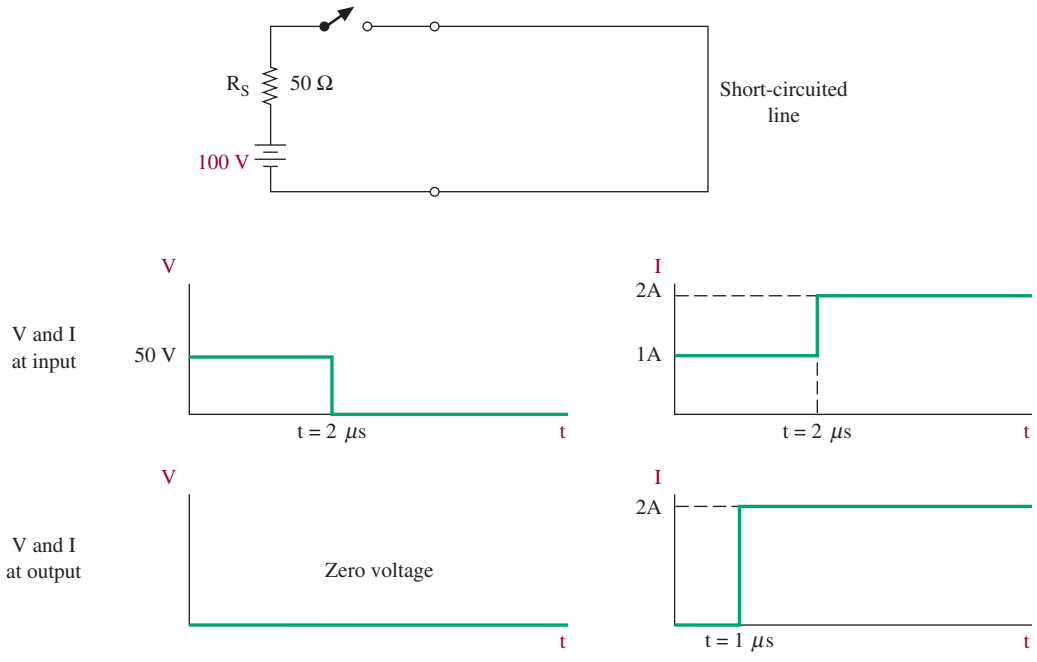


FIGURE 18 Direct current applied to a short-circuited line.

The current at the line's input is initially 1 A until the reflected current of 1 A arrives at $t = 2\ \mu s$ to cause the total current to be 2 A.

## Standing Waves: Open Line

The conditions of an open or shorted transmission line are extraordinary conditions. Reflected waves are, on the whole, highly undesirable. It is known that when the impedance of the source is equal to the characteristic impedance of the line and that line is terminated in its characteristic impedance, there is a maximum transfer of power, complete absorption of energy by the load, and no reflected waves. If the line is not terminated in its characteristic impedance, there will be reflected waves present on the line. The type and amount of reflected waves depend on the type and amount of mismatch. When a mismatch occurs, there is an interaction between the incident and reflected waves. When the applied signal is ac, this interaction results in the creation of a new kind of wave called a **standing wave.** This name is given to these waveforms because they apparently remain in one position, varying only in amplitude. These waves, and the variations in amplitude, are illustrated in Figure 19.

**Standing Wave**
waveforms that apparently seem to remain in one position, varying only in amplitude

The left-hand column in Figure 19 represents the in-phase reflection of the voltage wave on the open line or current wave on a shorted line. Note the dashed line extending past the load in the top left-hand diagram. It is an extension of the incident traveling wave. By simply "folding" it back across the termination point, the reflected wave for in-phase reflection is obtained. All the diagrams of in-phase reflection show the incident, reflected, and resultant waves on a line at various instants of time. They are graphs of a wave versus *position* at some instant of time and *not* waves versus time, as you are accustomed to seeing. The resultant waves for each instant of time are shown with a blue line and are simply the vector sum of the incident and reflected waves.

Note that at positions $d_1$ and $d_3$ in Figure 19 the resultant voltage (current) on the line (shown in blue) is always zero. If you stationed yourself at these points with an oscilloscope, no wave would ever be seen once the very first incident wave and then reflected wave had passed by. On the other hand, at position $d_2$, the generator and, at the load, the resultants have a maximum value. The resultant is truly a *standing* wave. If readings of the rms voltage and current waves for an open line were taken along the line, the result would be as shown in Figure 20. This is a conventional picture of standing waves. The voltage at the open is maximum, while the current is zero, as it must be through an open circuit. The positions $d_1$ through $d_6$ correspond to those positions shown in Figure 19 with respect to summation of the absolute values of the resultants shown in Figure 19.

## Standing Waves: Shorted Line

The right-hand column of Figure 19 shows the out-of-phase reflection that occurs for current on an open line and voltage on a shorted line. The first graph shows that the incident wave is extended (in dashed lines) past the load *180° out of phase* from the incident wave and then folded back to provide the reflected wave. At *b* the reflected wave coincides with the incident wave, providing the maximum possible resultant. At *d* the reflected wave cancels with the incident wave so that the resultant at that instant of time is zero at all points on the line.

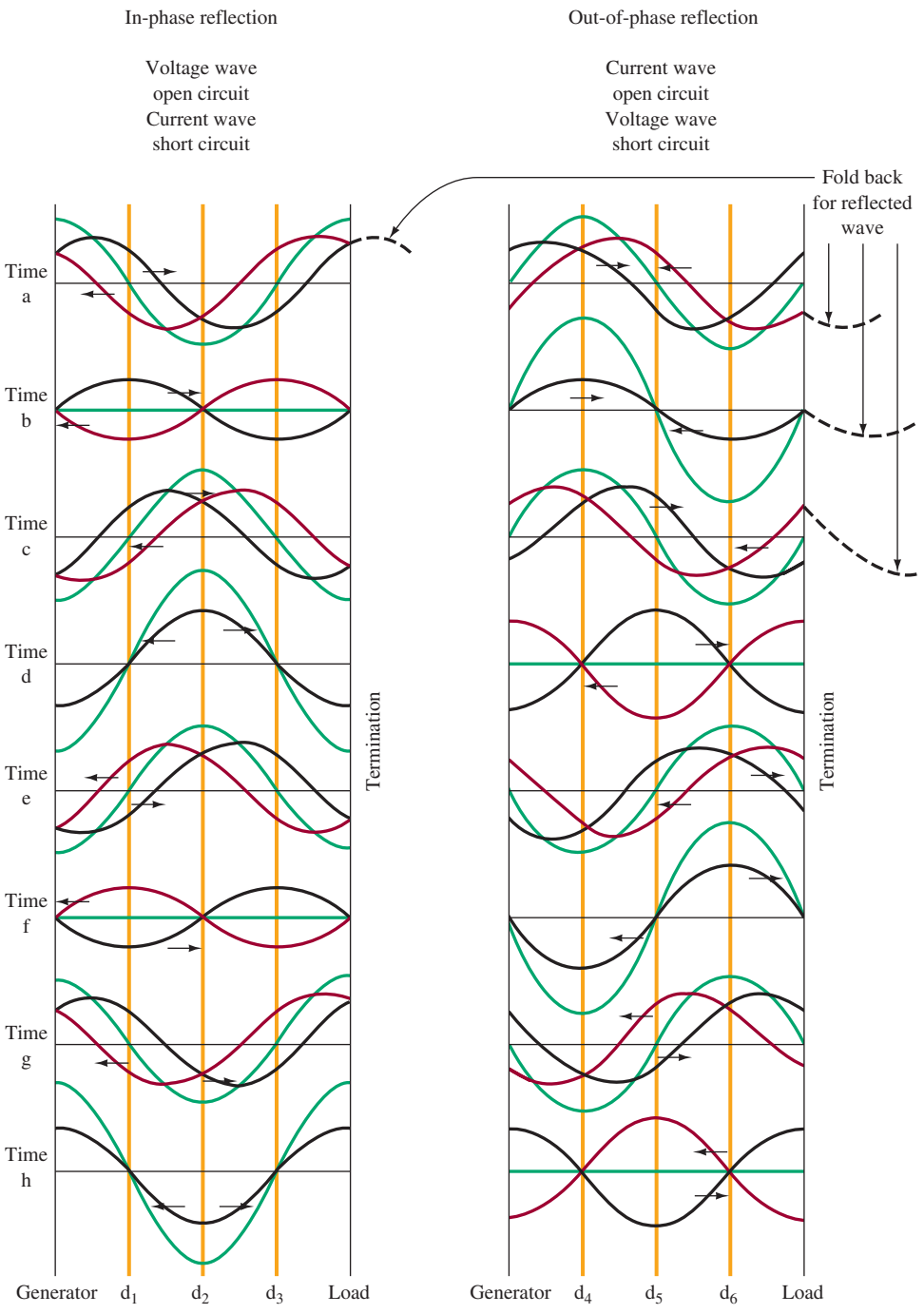


FIGURE 19 Development of standing waves.

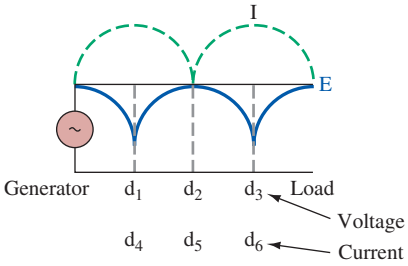


FIGURE 20 Conventional picture of standing waves—open line.

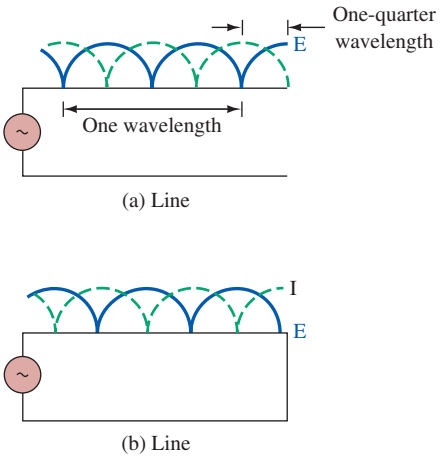


FIGURE 21 Standing waves of voltage and current.

At the end of a transmission line terminated in an open, the current is zero and the voltage is maximum. This relationship may be stated in terms of phase. The voltage and current at the end of an open-ended transmission line are 90° out of phase. At the end of a transmission line terminated in a short, the current is maximum and the voltage is zero. The voltage and current are again 90° out of phase.

These current–voltage relationships are shown in the diagrams in Figure 21. These phase relationships are important because they indicate how the line acts at different points throughout its length.

A transmission line has points of maximum and minimum voltage as well as points of maximum and minimum current. The position of these points can be predicted accurately if the applied frequency and type of line termination are known.

## Example 6

*An open-circuited line is 1.5λ long. Sketch the incident, reflected, and resultant voltage and current waves for this line at the instant the generator is at its peak positive value.*

### Solution

Recall that to obtain the reflected voltage from an open circuit, the incident wave should be continued past the open (in your mind) and then folded back toward the generator. This process is shown in Figure 22(a). Notice that the reflected wave coincides with the incident wave, making the resultant wave double the amplitude of the generator voltage. The current wave at an open circuit should be continued 180° out of phase, as shown in Figure 22(b), and then folded back to provide the reflected wave. In this case, the incident and reflected current waves cancel one another, leaving a zero resultant all along the line at this instant of time.

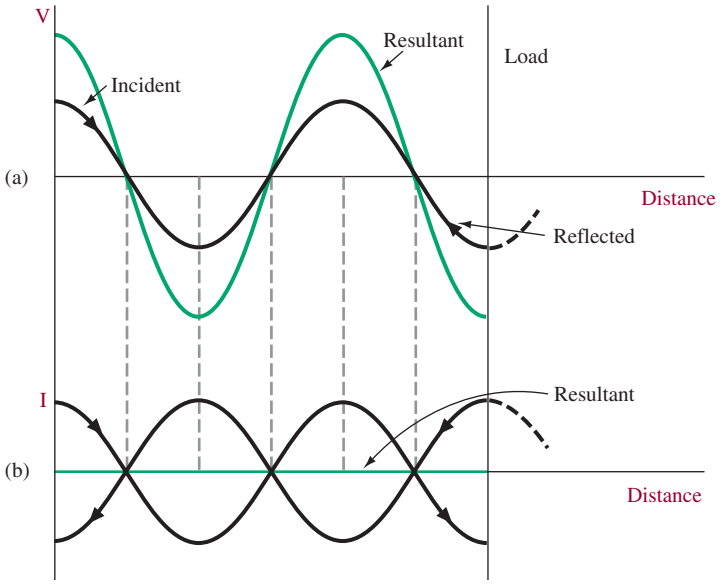


FIGURE 22 Diagram for Example 6.



## 7 Standing Wave Ratio

A standing wave is the result of an incident and reflected wave. The ratio of reflected voltage to incident voltage is called the reflection coefficient, $\Gamma$. That is,

$$\Gamma = \frac{E_r}{E_i} \tag{23}$$

where $\Gamma$ is the reflection coefficient, $E_r$ is the reflected voltage, and $E_i$ is the incident voltage. When a line is terminated with a short circuit, open circuit, or purely reactive load, no energy can be absorbed by the load so that total reflection takes place. The reflected wave equals the incident wave so that $|\Gamma| = 1$. When a line is terminated with a resistance equal to the line's $Z_0$, no reflection occurs, and therefore $\Gamma = 0$. For all other cases of termination, the load absorbs some of the incident energy (but not all), and the reflection coefficient is between 0 and 1.

The reflection coefficient may also be expressed in terms of the load impedance:

$$\Gamma = \frac{Z_L - Z_0}{Z_L + Z_0} \tag{24}$$

where $Z_L$ is the load impedance.

**Voltage Standing Wave Ratio**
ratio of the maximum voltage to minimum on a line

On a lossless line, the voltage maximums and minimums of a standing wave have a constant amplitude. The ratio of the maximum voltage to minimum on a line is called the **voltage standing wave ratio** (VSWR):

$$\text{VSWR} = \frac{E_{\max}}{E_{\min}} \tag{25}$$

In a more general sense, it is sometimes referred to as simply the **standing wave ratio** (SWR) because it is also equal to the ratio of maximum current to minimum current. Therefore,

**Standing Wave Ratio**
another name for voltage standing wave ratio

$$\text{SWR} = \text{VSWR} = \frac{E_{\max}}{E_{\min}} = \frac{I_{\max}}{I_{\min}} \tag{26}$$

The VSWR can also be expressed in terms of $\Gamma$:

$$\text{VSWR} = \frac{1 + |\Gamma|}{1 - |\Gamma|} \tag{27}$$

The VSWR has an infinite value when total reflection occurs because $E_{\min}$ is 0 and has a value of 1 when no reflection occurs. No reflection means no standing wave so that the rms voltage along the line is always the same (neglecting losses); thus $E_{\max}$ equals $E_{\min}$ and the VSWR is 1.

## Effect of Mismatch

The perfect condition of no reflection occurs only when the load is purely resistive and equal to $Z_0$. Such a condition is called a **flat line** and indicates a VSWR of 1. It is highly desirable because all the generator power capability is getting to the load. Also, if reflection occurs, the voltage maximums along the line may exceed the cable's dielectric strength, causing a breakdown. In addition, the existence of a reflected wave means greater $I^2R$ (power) losses, which can be a severe problem when the line is physically long. The energy contained in the reflected wave is absorbed by the generator (except for the $I^2R$ losses) and not "lost" unless the generator is not perfectly matched to the line, in which case a rereflection of the reflected wave occurs at the generator. In addition, a high VSWR also tends to accentuate noise problems and causes "ghosts" to be transmitted with video or data signals.

**Flat Line**
condition of no reflection; VSWR is 1

To summarize, then, the disadvantages of not having a perfectly matched (flat line) system are as follows:

1. The full generator power does not reach the load.
2. The cable dielectric may break down as a result of high-value standing waves of voltage (voltage nodes).
3. The existence of reflections (and rereflections) increases the power loss in the form of $I^2R$ heating, especially at the high-value standing waves of current (current nodes).
4. Noise problems are increased by mismatches.
5. "Ghost" signals can be created.

The VSWR can be determined quite easily, if the load is a known value of pure resistance, by the following equation:

$$\text{VSWR} = \frac{Z_0}{R_L} \quad \text{or} \quad \frac{R_L}{Z_0} \quad \text{(whichever is larger)} \tag{28}$$

where $R_L$ is the load resistance. Whenever $R_L$ is larger than $Z_0$, $R_L$ is used in the numerator so that the VSWR will be greater than 1. For instance, on a 100-Ω line

($Z_0 = 100\ \Omega$), a 200-Ω or 50-Ω $R_L$ results in the same VSWR of 2. They both create the same degree of mismatch.

The higher the VSWR, the greater is the mismatch on the line. Thus, a low VSWR is the goal in a transmission line system except when the line is being used to simulate a capacitance, inductance, or tuned circuit. These effects are considered in the following sections.

## Example 7

*A citizen's band transmitter operating at 27 MHz with 4-W output is connected via 10 m of RG-8A/U cable to an antenna that has an input resistance of 300 Ω. Determine*
*(a) The reflection coefficient.*
*(b) The electrical length of the cable in wavelengths (λ).*
*(c) The VSWR.*
*(d) The amount of the transmitter's 4-W output absorbed by the antenna.*
*(e) How to increase the power absorbed by the antenna.*

### Solution

(a)
$$\Gamma = \frac{Z_L - Z_0}{Z_L + Z_0} \tag{24}$$
$$= \frac{300\ \Omega - 50\ \Omega}{300\ \Omega + 50\ \Omega} = \frac{5}{7} = 0.71$$

(b)
$$\lambda = \frac{v}{f} \tag{22}$$
$$= \frac{2.07 \times 10^8\ \text{m/s}}{27 \times 10^6\ \text{Hz}} = 7.67\ \text{m}$$

Because the cable is 10 m long, its electrical length is

$$\frac{10\ \text{m}}{7.67\ \text{m/wavelength}} = 1.3\lambda$$

(c) Because the load is resistive,

$$\text{VSWR} = \frac{R_L}{Z_0} \tag{28}$$
$$= \frac{300\ \Omega}{50\ \Omega} = 6$$

An alternative solution, because Γ is known, is

$$\text{VSWR} = \frac{1 + \Gamma}{1 - \Gamma} \tag{27}$$
$$= \frac{1 + \frac{5}{7}}{1 - \frac{5}{7}} = \frac{\frac{12}{7}}{\frac{2}{7}} = 6$$

(d) The reflected voltage is $\Gamma$ times the incident voltage. Because power is proportional to the square of voltage, the reflected power is $(5/7)^2 \times 4\text{ W} = 2.04\text{ W}$, and the power to the load is

$$\begin{aligned} P_{\text{load}} &= 4\text{ W} - P_{\text{refl}} \\ &= 4\text{ W} - 2.04\text{ W} = 1.96\text{ W} \end{aligned}$$

(e) You do not have enough theory yet to answer this question.

Example 7 showed the effect of mismatch between line and antenna. The transmitted power of only 1.96 W instead of 4 W would seriously impair the effective range of the transmitter. It is little wonder that great pains are taken to get the VSWR as close to 1 as possible.

## Quarter-Wavelength Transformer

One simple way to match a line to a resistive load is by use of a **quarter-wavelength matching transformer.** It is not physically a transformer but does offer the property of impedance transformation. To match a resistive load, $R_L$, to a line with characteristic impedance $Z_0$, a $\lambda/4$ section of line with characteristic impedance $Z_0'$ should be placed between them. In equation form, the value of $Z_0'$ is

$$Z_0' = \sqrt{Z_0 R_L} \tag{29}$$

**Quarter-Wavelength Matching Transformer** quarter-wavelength piece of transmission line of specified line impedance used to force a perfect match between a transmission line and its load resistance

The required $\lambda/4$ section to match the 50-$\Omega$ line to the 300-$\Omega$ resistive load of Example 7 would have $Z_0' = \sqrt{50\ \Omega \times 300\ \Omega} = 122\ \Omega$. This solution is shown pictorially in Figure 23. The input impedance looking into the matching section is 50 $\Omega$. This is the termination on the 50-$\Omega$ cable, and thus the line is flat, as desired, from there on back to the generator. Remember that $\lambda/4$ matching sections are only effective working into a resistive load. The principle involved is that there will now be two reflected signals, equal but separated by $\lambda/4$. Because one of them travels $\lambda/2$ farther than the other, this 180° phase difference causes cancellation of the reflections.

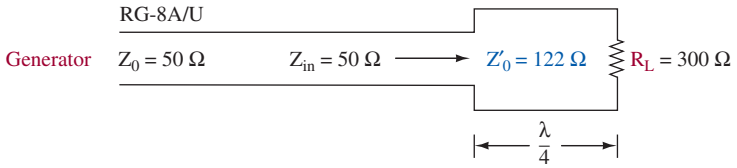


FIGURE 23 $\lambda/4$ matching section for Example 7.

## Electrical Length

The **electrical length** of a transmission line is of importance to this overall discussion. Recall that when reflections occur, the voltage maximums occur at $\lambda/2$ intervals. If the transmission line is only $\lambda/16$ long, for example, the reflection still occurs, but the line is so short that almost no voltage variation along the line exists. This situation is illustrated in Figure 24.

**Electrical Length** the length of a line in wavelengths, not physical length

Notice that the $\lambda/16$ length line has almost no "standing" voltage variations along the line because of its short electrical length, while the line that is one $\lambda$ long has two complete variations over its length. Because of this, the transmission line

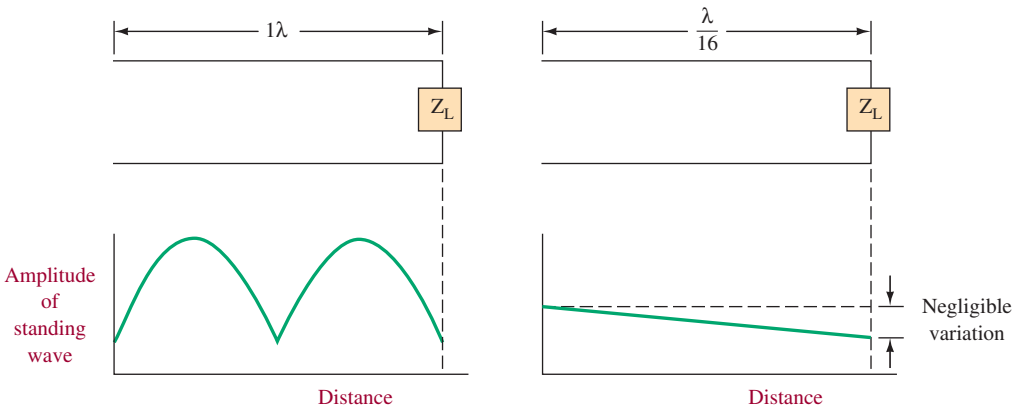


FIGURE 24 Effect of line electrical length.

effects we have been discussing are applicable only to electrically long lines—generally only those greater than $\lambda/16$ long.

Be careful that you understand the difference between electrical length and physical length. A line can be miles in length and still be electrically short if the frequency it carries is low. For example, a telephone line carrying a 300-Hz signal has a $\lambda$ of 621 mi. On the other hand, a 10-GHz signal has a $\lambda$ of 3 cm so that even extremely small circuit interconnections require application of transmission line theory.



# 8 The Smith Chart

## Transmission Line Impedance

Transmission line calculations are very cumbersome from a purely mathematical standpoint. It is often necessary to know the input impedance of a line of a certain length with a given load. The impedance at any point on a line with standing waves is repetitive every half wavelength because the voltage and current waves are similarly repetitive. The impedance is therefore constantly changing along the line and is equal to the ratio of voltage to current at any given point. This impedance can be solved via the following equation for a lossless line:

$$Z_s = Z_0 \frac{Z_L + jZ_0 \tan \beta s}{Z_0 + jZ_L \tan \beta s} \tag{30}$$

where $Z_s$ = line impedance at a given point
$Z_L$ = load impedance
$Z_0$ = line's characteristic impedance
$\beta s$ = distance from the load to the point where it is desired to know the line impedance (electrical degrees)

Because the tangent function is repetitive every 180°, the result will similarly be repetitive, as we know it should be. If the line is $\frac{3}{4}\lambda$ long (270 electrical degrees), its impedance is the same as at a point $\lambda/4$ from the load.

## Smith Chart Introduction

**Smith Chart**
impedance chart developed by P. H. Smith, useful for transmission line analysis

Equation (30) can be solved, but the solution using the **Smith chart** is far more convenient and versatile. This impedance chart was developed by P. H. Smith in 1938 and is still widely used for line, antenna, and waveguide calculations in spite of the widespread availability of computers and programmable calculators.

Figure 25 illustrates the Smith chart. It contains two sets of lines. The lines representing constant resistance are circular and are all tangent to each other at the right-hand end of the horizontal line through the center of the chart. The value of resistance along any one of these circles is constant, and its value is indicated just above the horizontal line through the center of the chart.

The second set of lines represents arcs of constant reactance. These arcs are also tangent to one another at the right-hand side of the chart. The values of reactance for

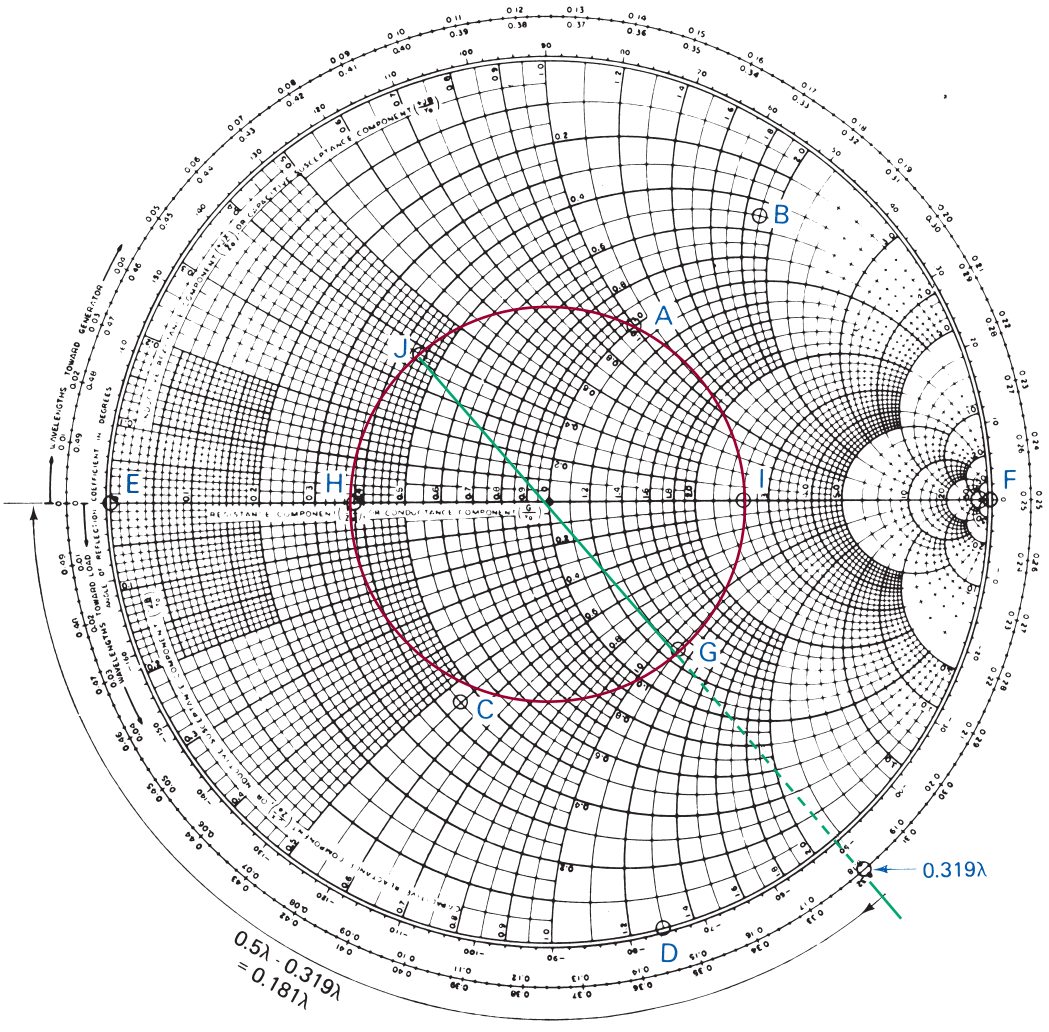


FIGURE 25 Smith chart.

each arc are labeled at the circumference of the chart and are positive on the top half and negative on the bottom half.

Several computer-aided design (CAD) programs are available that can accurately predict high-frequency circuit performance. It may therefore seem strange that the pencil-and-paper Smith chart is still utilized. The intuitive and graphical nature of Smith chart design is still desirable, however, because the effect of each design step is clearly apparent.

## Using the Smith Chart

**Normalizing**
dividing impedances by the line's characteristic impedance

So the chart can be used for a wide range of impedance and admittance values, a process of **normalizing** is employed. This involves dividing all impedances by the line's $Z_0$ so that if the impedance $100 + j50$ were to be plotted for a 50-Ω line, the value $100/50 + j50/50 = 2 + j1$ would be used. The normalized impedance is then represented by a lowercase letter,

$$z = \frac{Z}{Z_0} \tag{31}$$

where $z$ is the normalized impedance. When working with admittances,

$$y = \frac{Y}{Y_0} \tag{32}$$

where $y$ is the normalized admittance and $Y_0$ is the line's characteristic admittance.

The point $A$ in Figure 25 is $z = 1 + j1$ or could be $y = 1 + j1$. It is the intersection of the one resistance circle and one reactive arc. Point $B$ is $0.5 + j1.9$, while point $C$ is $0.45 - j0.55$. Be sure that you now understand how to plot points on the Smith chart.

Point $D$ (toward the bottom of the chart) in Figure 25 is $0 - j1.3$. All points on the circumference of the Smith chart, such as point $D$, represent pure reactance except for the points at either extreme of the horizontal line through the center of the chart. At the left-hand side, point $E$, a short circuit ($z = 0 + j0$) is represented, while at the right-hand side, point $F$, an open circuit is represented ($z = \infty$).

Points $G$ and $J$ in Figure 25 illustrate a practical application of the Smith chart. Assume that a 50-Ω transmission line has a load $Z_L = 65 - j55\ \Omega$. That load, when normalized, is

$$z_L = \frac{Z_L}{Z_0} = \frac{65}{50} - j\frac{55}{50} = 1.3 - j1.1$$

Point $G$ is plotted as $z_L = 1.3 - j1.1$. By drawing a circle through point $G$ and using the chart center as the circle's center, the locations of all impedances along the transmission line are described by the circle. Recall that the impedance along a line varies but repeats every half wavelength. A full revolution around the circle corresponds to a half-wavelength (180°) movement on a line. A clockwise (CW) rotation on the chart means you are moving toward the generator, while a counterclockwise (CCW) rotation indicates movement toward the load. The scales on the outer circumference of the chart indicate the amount of movement in wavelengths. For example, moving from the load (point $G$) toward the generator to point $H$ brings us to a point on the line where the impedance is purely resistive and equal to $z = 0.4$. As shown in Figure 25, that movement is equal to $0.5\lambda - 0.319\lambda = 0.181\lambda$.

In other words, at a point 0.181λ from the load, the impedance on the line is purely resistive and has a normalized value of $z = 0.4$. In terms of actual impedance, the impedance is $Z = z \times Z_0 = 0.4 \times 50\ \Omega = 20\ \Omega$.

Moving another λ/4 or halfway around the circle from point *H* in Figure 25 brings you to another point of pure resistance, point *I*. At point *I* on the line, the impedance is $z = 2.6$. That also is the VSWR on the line. Wherever the circle drawn through $z_L$ for a transmission line crosses the right-hand horizontal line through the chart center, that point is the VSWR that exists on the line. For this reason, the circle drawn through a line's load impedance is often called its VSWR circle.

The Smith chart allows for a very simple conversion of impedance to admittance, and vice versa. The value of admittance corresponding to any impedance is always diagonally opposite and the same distance from the center. For example, if an impedance is equal to $1.3 - j1.1$ (point *G*), then the admittance *y* is at point *J* and is equal to $0.45 + j0.38$ as read from the chart. Because $y = 1/z$, you can mathematically show that

$$\frac{1}{1.3 - j1.1} = 0.45 + j0.38$$

but the Smith chart solution is much less tedious. Recall that mathematical *z* to *y* and *y* to *z* transformations require first a rectangular to polar conversion, taking the inverse, and then a polar to rectangular conversion.

Other applications of the Smith chart are most easily explained by solution of actual examples.

## Example 8

*Find the input impedance and VSWR of a transmission line 4.3λ long when $Z_0 = 100\ \Omega$ and $Z_L = 200\ - j150\ \Omega$.*

### Solution

First normalize the load impedance:

$$z_L = \frac{Z_L}{Z_0} \qquad (31)$$

$$= \frac{200\ - j150\ \Omega}{100\ \Omega} = 2 - j1.5$$

That point is then plotted on the Smith chart in Figure 26, and its corresponding VSWR circle is also shown. That circle intersects the right-hand half of the horizontal line at 3.3 as shown, and therefore the VSWR = 3.3. Now, to find the line's input impedance, it is required to move from the load toward the generator (CW rotation) 4.3λ. Because each full revolution on the chart represents λ/2, it means that eight full rotations plus 0.3λ is necessary. Thus, just moving 0.3λ from the load in a CW direction will provide $z_{in}$. The radius extended through $z_L$ intersects the outer wavelength scale at 0.292λ. Moving from there to 0.5λ provides a movement of 0.208λ. Thus, additional movement of 0.092λ (0.3λ − 0.208λ) brings us to the generator and provides $z_{in}$ for a 4.3λ line (or 0.3λ, 0.8λ, 1.3λ, 1.8λ, etc., length line). The line's $z_{in}$ is read as

$$z_{in} = 0.4 + j0.57$$

from the chart, which in ohms is

$$Z_{in} = z_{in} \times Z_0 = (0.4 + j0.57) \times 100\ \Omega = 40\ \Omega + j57\ \Omega$$

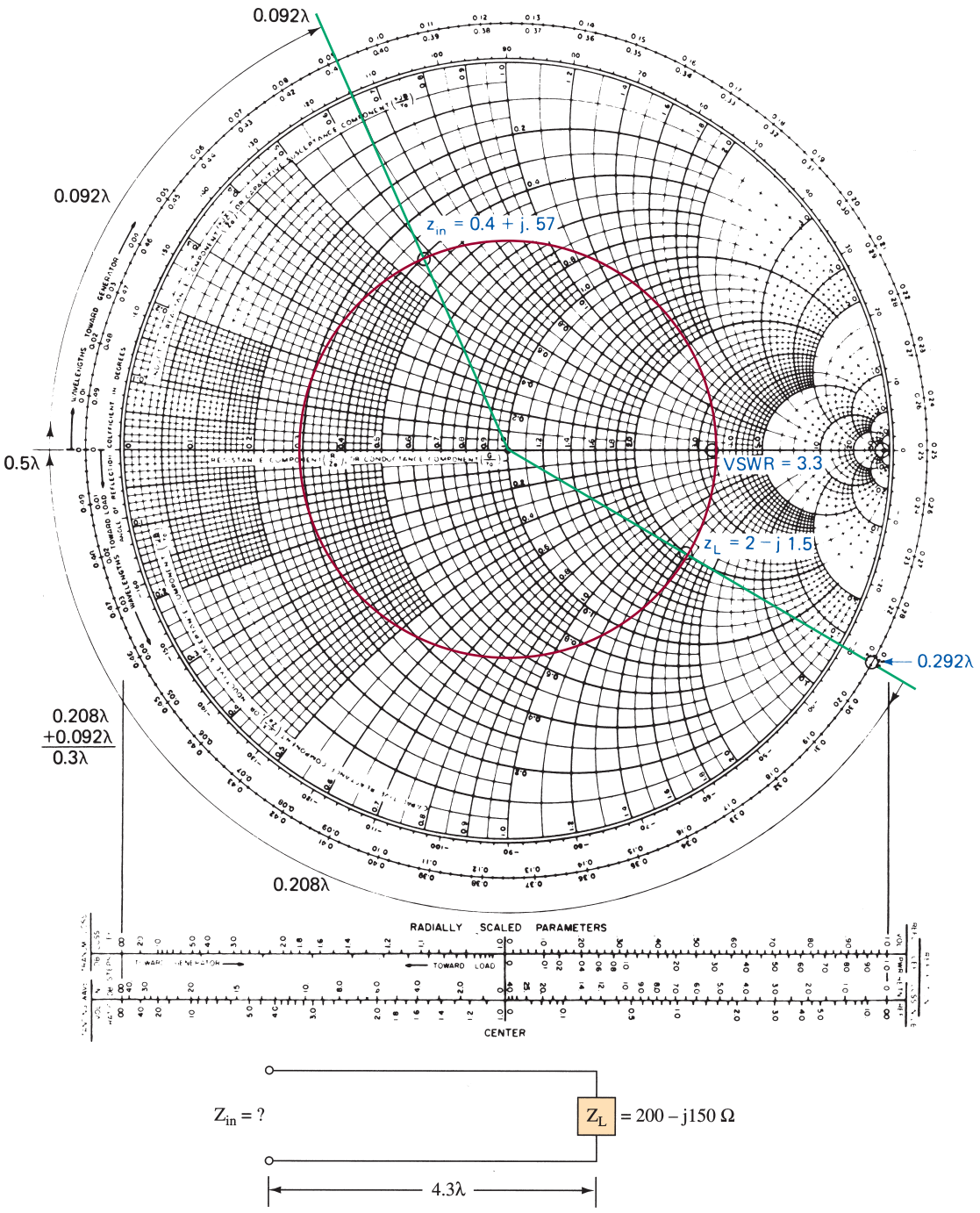


FIGURE 26 Smith chart for Example 8.

## Corrections for Transmission Loss

Example 8 assumed the ideal condition of a lossless line. If line attenuation cannot be neglected, the incident wave gets weaker as it travels toward the load, and the reflected wave gets weaker as it travels back toward the generator. This causes the VSWR to get weaker as we approach the source end of the line. A true standing wave representation on the Smith chart would be a spiral. The correction for this condition is made using the "transm. loss, 1-dB steps" scale at the bottom left-hand side of the Smith chart. Other scales at the bottom of the chart can be used to provide the VSWR (which can be taken directly off the chart, as previously shown), the voltage and power reflection coefficient, and decibel loss information.

## Matching Using the Smith Chart

Many of the calculations involved with transmission lines pertain to matching a load to the line and thus keeping the VSWR as low as possible. The following examples illustrate some of these situations.

### Example 9

*A load of 75 Ω + j50 Ω is to be matched to a 50-Ω transmission line using a λ/4 matching section. Determine the proper location and characteristic impedance of the matching section.*

#### Solution

1. Normalize the load impedance:

$$z_L = \frac{Z_L}{Z_0} = \frac{75\ \Omega + j50\ \Omega}{50\ \Omega} = 1.5 + j1$$

2. Plot $z_L$ on the Smith chart and draw the VSWR circle. This is shown in Figure 27.
3. From $z_L$ move toward the generator (CW) until a point is reached where the line is purely resistive. Recall that the λ/4 matching section works only between a pure resistance and the line.
4. Point *A* or *B* in Figure 27 could be used as the point where the matching section is inserted. We shall select point *A* because it is closest to the load. It is 0.058λ from the load. At that point the line should be cut and the λ/4 section inserted as shown in Figure 27.
5. The normalized impedance at point *A* is purely resistive and equal to $z = 2.4$. That also is the VSWR on the line with no matching. The actual resistance is $2.4 \times 50\ \Omega = 120\ \Omega$. Therefore, the characteristic impedance of the matching section is

$$Z_0' = \sqrt{Z_0 \times R_L} = \sqrt{50\ \Omega \times 120\ \Omega} = 77.5\ \Omega \quad (29)$$

## Stub Tuners

The use of short-circuited stubs is prevalent in matching problems. A **single-stub tuner** is illustrated in Figure 28(a). In it, the stub's distance from the load and location of its short circuit are adjustable. The **double-stub tuner** shown in Figure 28(b) has fixed stub locations, but the position of both short circuits is adjustable. The following example illustrates the procedure for matching with a single-stub tuner.

**Single-Stub Tuner** the stub's distance from the load and the location of its short circuit are adjustable to allow a match between line and load

**Double-Stub Tuner** has fixed stub locations, but the position of the short circuits is adjustable to allow a match between line and load

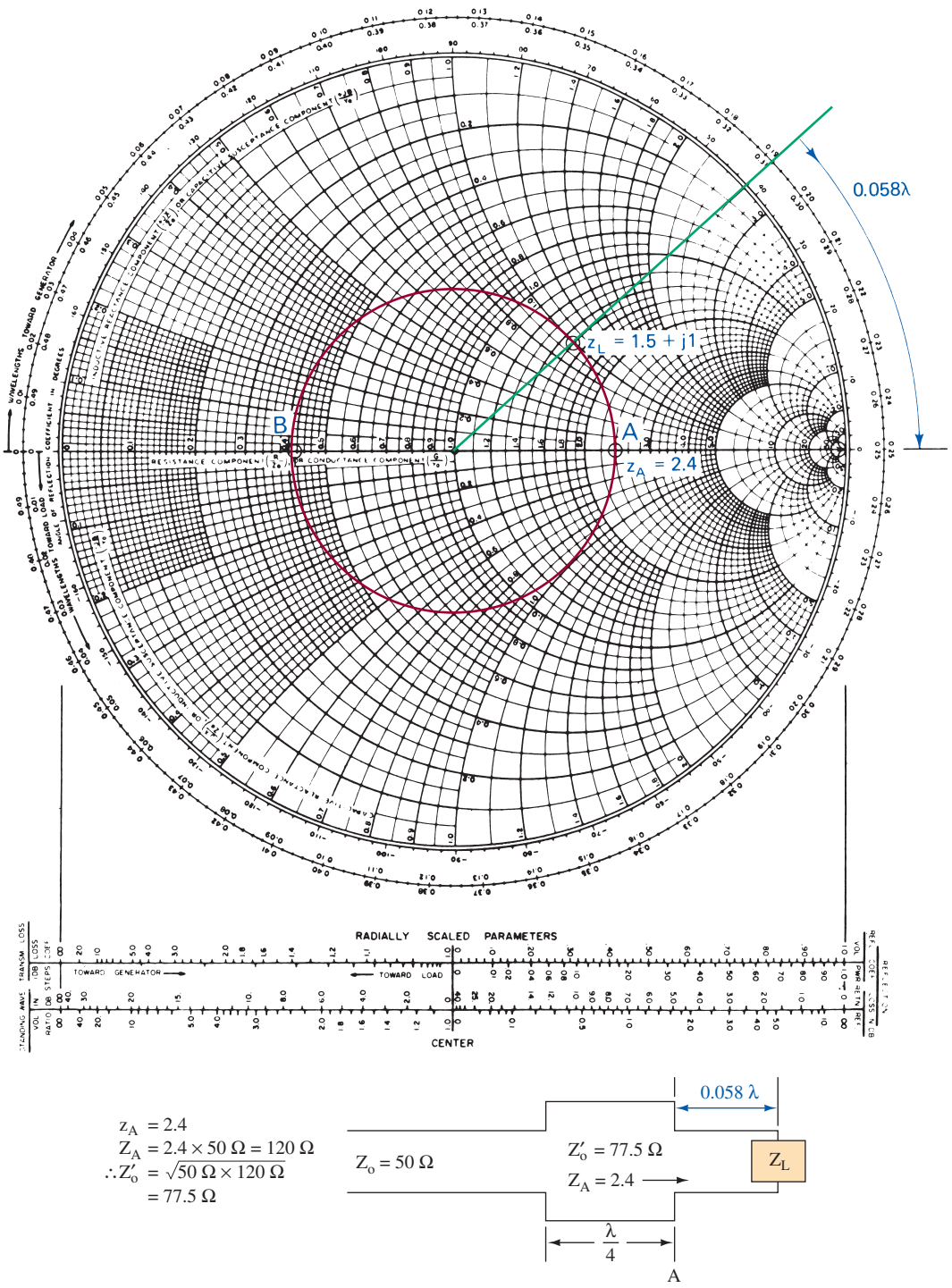


FIGURE 27 Smith chart for Example 9.

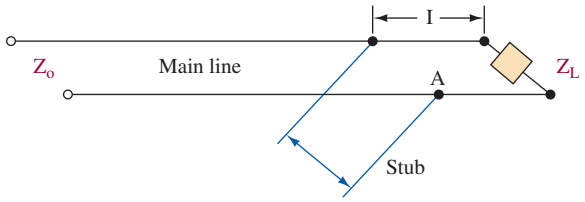


(a) Single-stub tuner

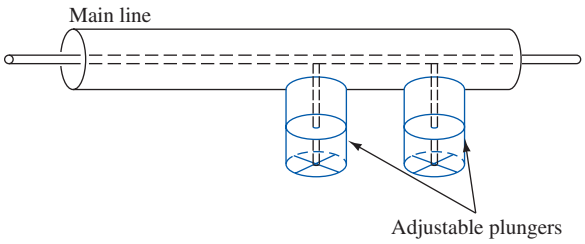


(b) Double-stub tuner

FIGURE 28 Stub tuners.

## Example 10

*The antenna load on a 75-Ω line has an impedance of 50 − j100 Ω. Determine the length and position of a short-circuited stub necessary to provide a match.*

### Solution

1. $$z_L = \frac{Z_L}{Z_o} = \frac{50 - j100\ \Omega}{75\ \Omega} = 0.67 - j1.33$$
2. Plot $z_L$ on the Smith chart (Figure 29), and draw the VSWR circle.
3. Convert $z_L$ to $y_L$ by going to the diagonally opposite side of the VSWR circle from $z_L$. Read $y_L = 0.27 + j0.59$.
4. Move from $y_L$ to the point where the admittance is $1 \pm$ whatever $j$ term results. That is point $A$ in Figure 29. Read point $A$ as $y_A = 1 + j1.75$ and note that point $A$ is $0.093\lambda$ from the load. The short-circuited stub should be located $0.093\lambda$ from the load.
5. Now the $+j1.75$ term at point $A$ must be canceled by the stub admittance. If the stub admittance is $y_s = -j1.75$, the imaginary terms cancel because the total admittance at point $A$ with the parallel stub is $(1 + j1.75 - j1.75) = 1$. Recall that parallel admittances are directly additive.
6. The load admittance of the short-circuited stub is infinite. That is plotted on the Smith chart as point $B$. From point $B$, move toward the generator until the stub admittance is $-j1.75$. That corresponds to a distance of $0.083\lambda$ and is the required length for the short-circuited stub.
7. A match is now accomplished because the total admittance at the stub location is 1. This means that

$$z = \frac{1}{y} = \frac{1}{1} = 1$$

or $Z = 1 \times 75\ \Omega = 75\ \Omega$, which matches the line to the point where the stub is connected back toward the generator.

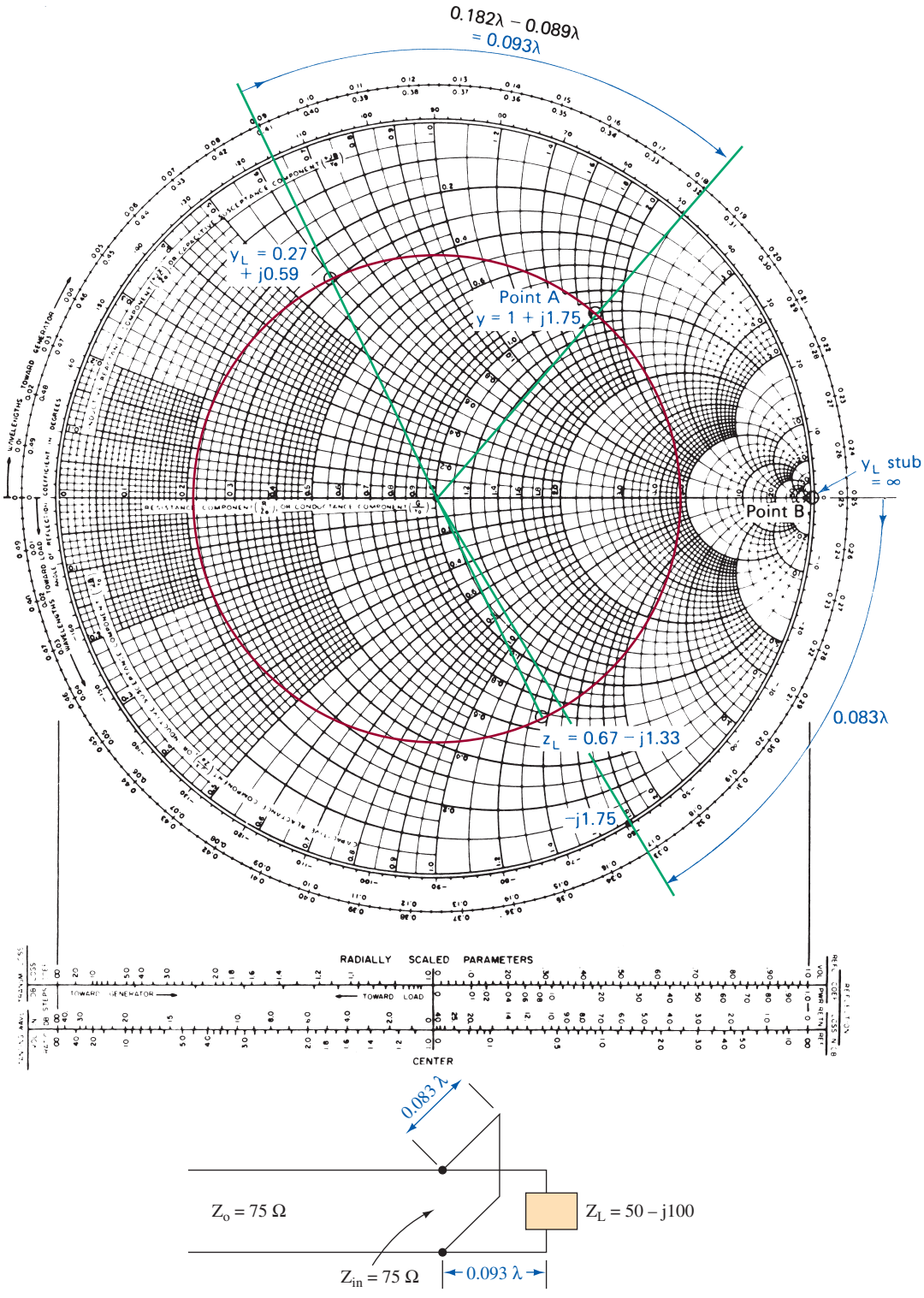


FIGURE 29 Smith chart for Example 10.

The key to matching with the single-stub tuner of the previous example is moving back from the load until the admittance takes on a normalized real term of 1. Whatever *j* term (imaginary) results can then be canceled with a short-circuited stub made to look like the same *j* term with opposite polarity. While the Smith chart may at first be perplexing to work with, a bit of practice allows mastery in a short period of time.



# 9 Transmission Line Applications

## Discrete Circuit Simulation

Transmission line sections can be used to simulate inductance, capacitance, and *LC* resonance. Figure 30 tabulates these effects for open and shorted sections with lengths equal to, less than, and greater than a quarter wavelength. A shorted quarter-wavelength section looks like a parallel *LC* circuit or ideally, therefore, like an open circuit. A shorted section less than $\lambda/4$ looks like a pure inductance, and a section greater than $\lambda/4$ looks like a pure capacitance. These effects can be verified on a Smith chart by plotting $z_L$ of 0 for a short-circuited line at the left center of the chart. Moving CW toward the generator less than $\lambda/4$ puts you on the top half of the chart, indicating a $+j$ term and thus inductance. Moving exactly $\lambda/4$ puts you at the center-right point on the chart, indicating the infinite impedance of an ideal tank circuit, and moving past that point provides the $-j$ impedance of capacitance.

While open-circuit sections would seem to provide similar effects, they are seldom used. The open-circuited line tends to radiate a fair amount of energy off the end of the line so that total reflection does not take place. This causes the simulated circuit element to take on a resistive term, which greatly reduces its quality. These losses do not occur with shorted sections, and the simulated circuit has better quality than is possible using discrete inductors and/or capacitors. Short-circuited $\lambda/4$ sections offer *Q*s of about 10,000 as compared to a maximum of about 1000 using a very high-grade inductor and capacitor.

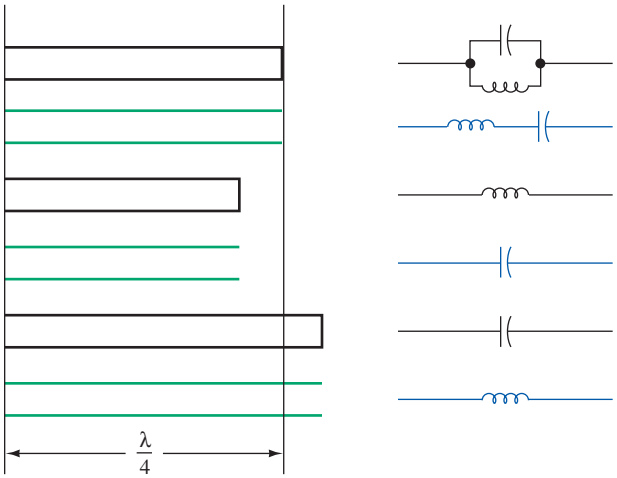


FIGURE 30 Transmission line section equivalency.

For this reason, it is normal practice to use transmission line sections to replace inductors and/or capacitors at frequencies above 500 MHz where the line section becomes short enough to be practically used. They are commonly found in the oscillator of UHF tuners for television; the tuners operate from about 500 to 800 MHz.

## Baluns

As described in Section 2, parallel wire line generally carries two equal but 180° out-of-phase signals with respect to ground. Such a line is called a *balanced* line. In a coaxial line, the outer conductor is usually grounded so that the two conductors do not carry signals with the same relationship to ground. The coaxial line is therefore termed an *unbalanced* line.

It is sometimes necessary to change from an unbalanced to a balanced condition such as when a coaxial line feeds a balanced load like a dipole antenna. They cannot be connected directly together because the antenna lead connected to the cable's grounded conductor would allow the shield to become part of the antenna.

This situation is solved through use of an unbalanced-to-balanced transformer, which is usually called a *balun*. It can be a transformer as shown in Figure 31(a) and described in Section 2 or a special transmission line configuration as shown in Figure 31 (b). The use of the standard transformer is limited due to excessive losses at high frequencies. The balun in Figure 31(b) does not suffer from that disadvantage. The inner conductor of the coaxial line is tapped at 180° ($\lambda/2$) from the end. The tap and the end of the inner conductor provide two equal but 180° out-of-phase signals, neither of which is grounded. Thus, they supply the required signals for the balanced line. These baluns are reversible because they function equally well in going from a balanced to an unbalanced condition.

## Transmission Lines as Filters

A quarter-wave section of transmission line can be used as an efficient filter or suppressor of even harmonics. Other types of filters may be used to filter out the odd

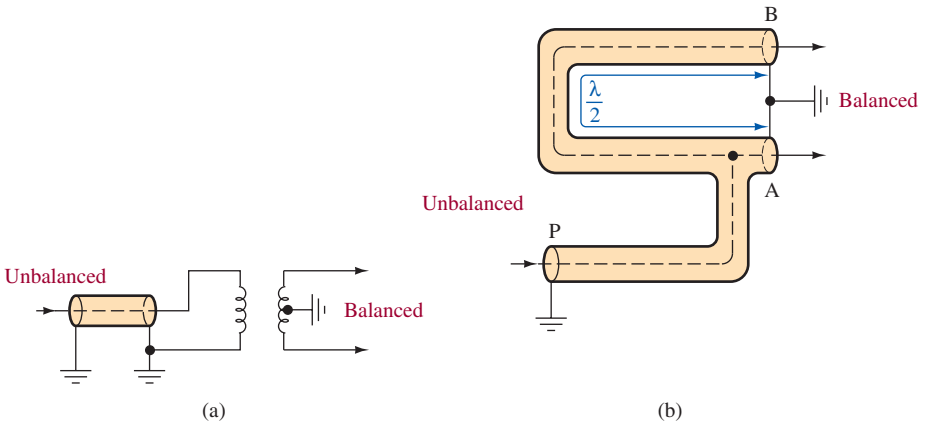


FIGURE 31 Baluns.

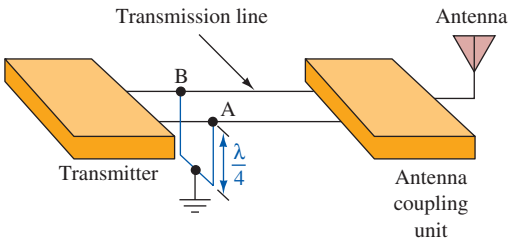


FIGURE 32 Quarter-wave filters.

harmonics. In fact, filters may be designed to eliminate the radiation of an entire single sideband of a modulated carrier.

Suppose that a transmitter is operating on a frequency of 5 MHz, and it is found that the transmitter is causing interference at 10 and 20 MHz. A shorted quarter-wave line section may be used to eliminate these undesirable harmonics. A quarter-wave line shorted at one end offers a high impedance at the unshorted end to the fundamental frequency. At a frequency twice the fundamental, such a line is a half-wave line, and at a frequency 4 times the fundamental, the line becomes a full-wave line. A half-wave or full-wave line offers zero impedance when its output is terminated in a short. Therefore, the radiation of even harmonics from the transmitter antenna can be eliminated almost completely by the circuit shown in Figure 32.

The resonant filter line, *AB*, is a quarter wave in length at 5 MHz and offers almost infinite impedance at this frequency. At the second harmonic, 10 MHz, the line *AB* is a half-wave line and offers zero impedance, thereby shorting this frequency to ground. The quarter-wave filter may be inserted anywhere along the nonresonant transmission line with a similar effect.

## Slotted Lines

One of the simplest and yet most useful measuring instruments at very high frequencies is the **slotted line.** As its name implies, it is a section of coaxial line with a lengthwise slot cut in the outer conductor. A pickup probe is inserted into the slot, and the magnitude of signal picked up is proportional to the voltage between the conductors at the point of insertion. The probe rides in a carriage along a calibrated scale so that data can be obtained to plot the standing wave pattern as a function of distance. From these data, the following information can be determined:

**Slotted Line**
section of coaxial line with a lengthwise slot cut in the outer conductor to allow measurement of the standing wave pattern

1. VSWR
2. Generator frequency
3. Unknown load impedance

## Time-Domain Reflectometry

Time-domain reflectometry (TDR) is a system whereby a short-duration pulse is transmitted into a line. If monitored with an oscilloscope, the reflection of that pulse provides much information regarding the line. Of course, no reflection at all indicates an infinitely long line or (more likely) a line with a perfectly matched load and no discontinuities.

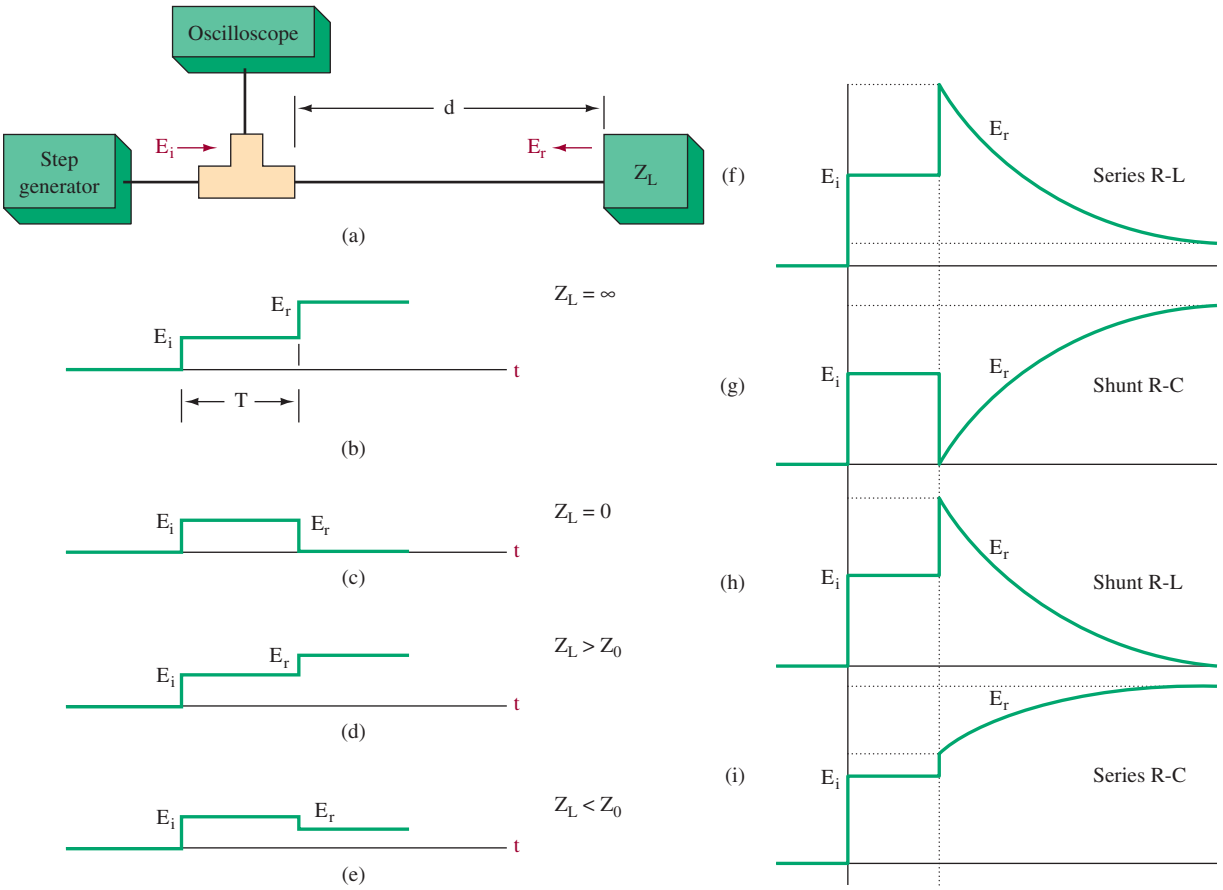


FIGURE 33 Time-domain reflectometry.

A very common problem with transmission line communications involves cable failure between communications terminals. These problems are usually due to chemical erosion or a mechanical break. Location of these problems is done by using a time-domain reflectometer. These instruments can pinpoint a fault within several feet at a distance of 10 mi. This is accomplished by simply measuring the time taken for the return pulse and then calculating distance based on the cable's propagation velocity.

TDR is also often used in laboratory testing. In these cases the transmitted signal is sometimes a fast-rise-time step signal. The setup for this condition is shown in Figure 33(a). In Figure 33(b) the case for an open-circuited line is shown. Assuming a lossless line, the reflected wave is in phase and effectively results in a doubling of the incident step voltage. The time $T$ shown is the time of incidence plus reflection and therefore should be divided by 2 to calculate the distance to the open circuit. Thus, the distance is propagation velocity ($V_p$) times $T/2$.

The case for a shorted line is shown in Figure 33(c). In this case the reflection is out of phase and results in cancellation. The situation of $Z_L$ greater than $Z_0$ is shown in Figure 33(d), while Figure 33(e) shows the case for $Z_L$ less than $Z_0$.

The magnitudes shown in the scope display can be used to determine $Z_L$ or the reflection coefficient $\Gamma$ because

$$\Gamma = \frac{E_r}{E_i} \tag{23}$$

and

$$\Gamma = \frac{Z_L - Z_0}{Z_L + Z_0} \tag{24}$$

and the final voltage, $E_F$, is

$$\begin{aligned} E_F &= E_i + E_r \\ &= E_i(1 + \Gamma) \\ &= E_i\left(1 + \frac{Z_L - Z_0}{Z_L + Z_0}\right) \end{aligned}$$

Figures 33(f) through (i) displays the TDR signal for complex impedances.



## 10 TROUBLESHOOTING

Vital links of communication data flow over transmission lines daily. Phone conversations, computer data, and audio and video information all depend on the media's ability to pass these signals wholly without any loss of quality. In this section, we will look at a popular application for transmission lines. We will also look at problems encountered in the cabling application. Many opportunities exist today for the technician who can effectively track down and repair cabling troubles.

After completing this section you should be able to

- Identify popular types of cabling available for LANs and other uses
- Describe crosstalk interference and give an example of it
- Describe simple methods for testing cable resistance, insulation, and TDR
- Troubleshoot television antenna lines

### Common Application

A very common application for miles and miles of wire today is the local area network (LAN). The most popular kind of wiring used to connect these systems is the unshielded twisted-pair UTP. Twisted pair is used mainly to connect the workstation to the hub/switch, or punch-down block. The vitality of a local area network depends on the cabling base—the transmission media. As a matter of fact, 75 percent of LAN failures are wiring related. Therefore, technicians must learn techniques to track cable problems and repair them effectively.

### Losses on Transmission Lines

From previous discussions in this chapter, transmission line losses can be summed up as energy losses, magnetic field losses, and electric field losses. Energy losses are a result of wire heating and leakage currents in the dielectric material used as the

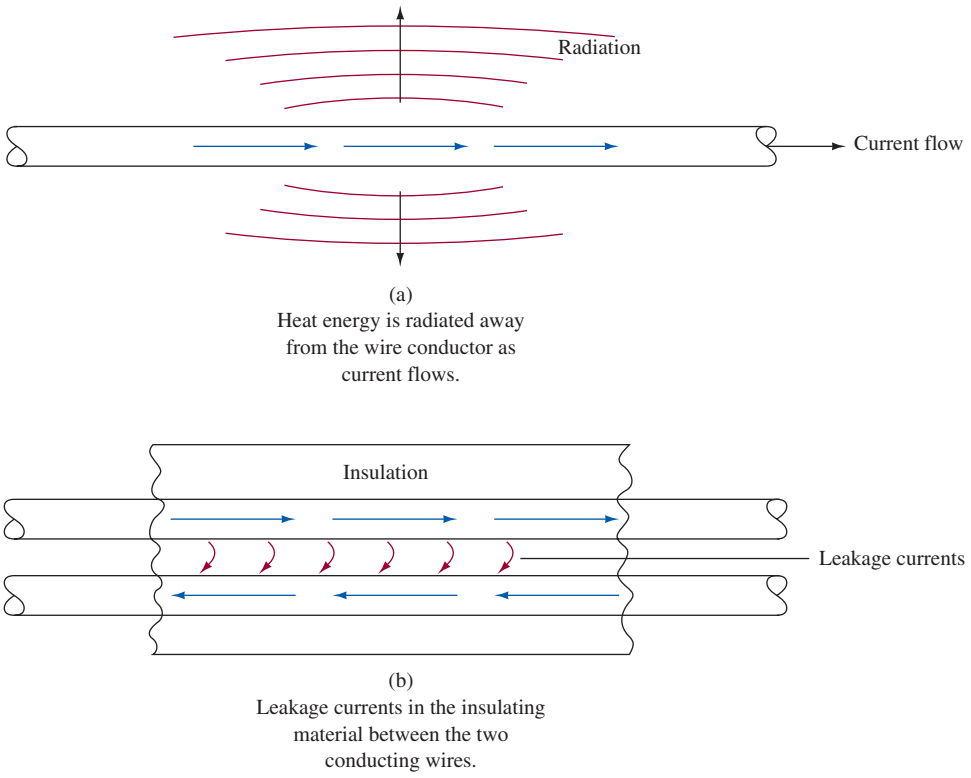


FIGURE 34 Heat radiation and leakage losses.

insulator. Heat is produced when current flows in the wire that has resistance. The heat is radiated away from the wire as shown in Figure 34(a). Figure 34(b) illustrates the effect of dielectric losses. Voltage potentials develop between the conductors that in turn cause minute currents to flow through the dielectric material. Heating and dielectric losses increase as signal frequency increases.

Magnetic field losses occur when currents are induced in a nearby conductor from the influence of another conductor's magnetic fields. Likewise, electrostatic fields tend to build a charge in a nearby conductor, causing electric field loss. Another effect of magnetic and electrostatic fields is induced interference, called crosstalk.

## Interference on Transmission Lines

When UTP is used for the wire base in a LAN, there is a transfer of energy between the wires, causing interference to be induced on wires. This unwanted coupling is caused by overlapping electric and magnetic fields and is called crosstalk. All of us have experienced hearing another party's conversation while having our own on the telephone. This is an example of crosstalk. Crosstalk can be reduced by careful attention to wire separation and twists. Tighter twists create better coupling, which cancels the effects of magnetic and electrostatic fields, thus reducing crosstalk interference. Don't untwist twisted pair, even at the connection points. Crosstalk can be

measured by special handheld instruments that directly compare the crosstalk reading against set standards. Crosstalk is also reduced by using STP or coaxial cable, but expense goes up and must be weighed against the system's requirements.

Logic circuits can be fooled into creating bad data from noise. Noise can come from various sources. Electric lights, electric generators, and switching devices generate noise that can become part of the signal if proper precautions are not observed. Do not run sensitive cabling near ac power lines or motors. Avoid running cable near overhead fluorescent lighting. In troubleshooting a system that is bothered by interference, check the wiring; someone may have ignored the above warnings. Shielding and proper cable terminations are also safeguards against noise interference.

## Cable Testing

Test instruments have been developed to do sophisticated testing on cable links. Discussing these instruments in detail is beyond the scope of this textbook; however, some instruments will be mentioned. Simple testing techniques can be used to discover faulty cabling. Pin-to-pin continuity testing done from one end of the wire to the opposite end is a simple effective means to detect miswiring and shorted and open links. Resistance measurements can be made on lengths of single wire and compared to the cable manufacturer's specified resistance value. At the far end, the wires to be tested would be shorted together, and the resistance would be measured at the near end. The resistance value would represent the resistance of two wires and must be taken under consideration. Resistance readings above or below the expected value indicates opens or shorts in the wires. Insulation testers or the megohm meter (megometer) give a readout or audible indication of the insulation test results. Normally the megometer is connected to the wires at the near end, and the wires are disconnected at the opposite end. The readout represents the condition of the insulation. Breakdowns of the insulation at any point along the wiring path are readily displayed.

## Television Antenna Line Repair

Transmission lines seldom totally fail without human intervention; however, they do age. Sunlight is hard on plastic dielectrics used in ribbon-type lines, sometimes called twin-lead. Where twin-lead is used near salt water, it deteriorates more rapidly. Moisture and salt collect on the dielectric, causing the loss to rise to the point that the twin-lead is not usable.

Coaxial cables are relatively immune to aging due to weather. Older types suffered from contamination due to plasticizer in the outer cover. Water can enter the cable at connectors and breaks in the outer covering. Water has a very high dielectric constant and changes the characteristic impedance and increase the loss. Sometimes coaxial cable is installed with very tight turns around corners. Over time, the center conductor will walk through the dielectric and eventually short the cable.

Suppose you are called to service a television receiver with "snow" almost overwhelming the picture. TV twin-lead is being used and is too cheap to justify much testing. Simply inspect it, looking for cracks in the plastic and discoloration of the plastic. You might take the time to short the far end and check resistance with an ohmmeter; there should be almost no resistance. If the far end is open, the resistance should be infinite. When in doubt, change the twin-lead.



# 11 TROUBLESHOOTING WITH ELECTRONICS WORKBENCH™ MULTISIM

In this exercise, the Smith chart is reintroduced using Electronics Workbench™ Multisim. Multisim provides a network analyzer instrument that contains the Smith chart analysis in addition to many other useful analytical tools. A network analyzer is used to measure the parameters commonly used to characterize circuits or elements that operate at high frequencies. This exercise focuses on the Smith chart and the Z-parameter calculations. Z-parameters are the impedance values of a network expressed using its real and imaginary components. Refer to Section 8 for additional Smith chart examples and a more detailed examination of their function.

Begin the exercise by opening **Fig12-35** at www.pearsoned.com/electronics. This circuit, shown in Figure 35, contains a 50-Ω resistor connected to port 1 (P1) of the network analyzer, and port 2 (P2) is terminated with a 50-Ω resistor. The first circuit being examined by the network analyzer is a simple resistive circuit. This example provides a good starting point for understanding the setup for the network analyzer and how to read the simulation results. The first circuit being tested by the network analyzer is shown in Figure 35.

Start the simulation. The impedance calculations performed by the network analyzer are very quick and the start-simulation button resets quickly. Before you look at the test results, predict what you will see. Based on the information you learned in Section 8 and the fact that you are testing a resistor, you would expect to see a purely resistive result. Double-click on the network analyzer to open the instrument. You should see a Smith chart similar to the one shown in Figure 36.

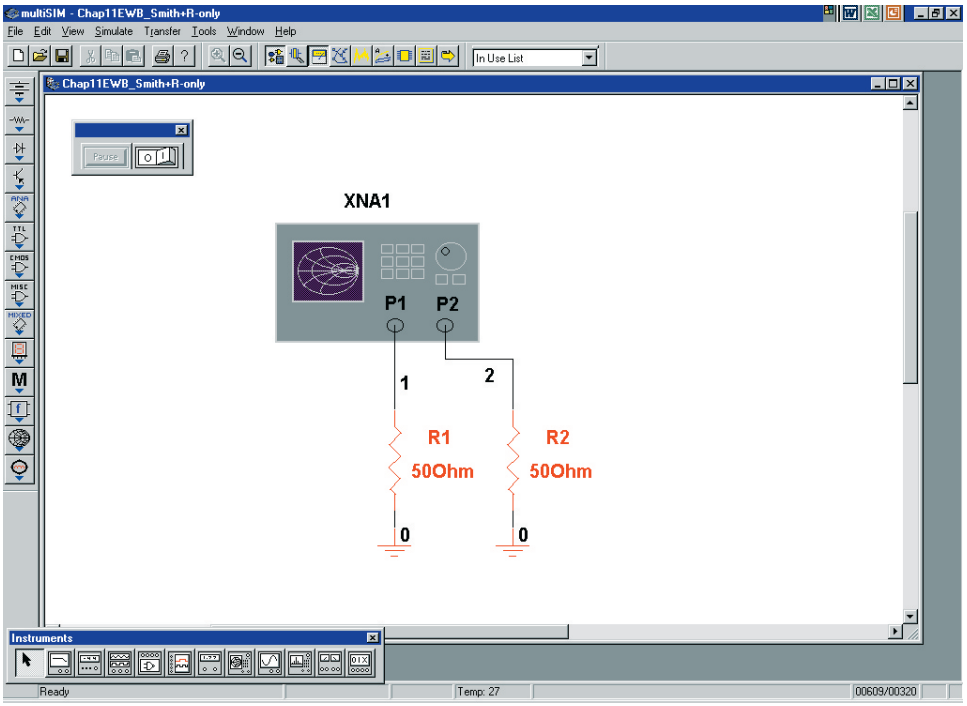


FIGURE 35 An example of using the Multisim Network Analyzer to analyze a 50-Ω resistor.

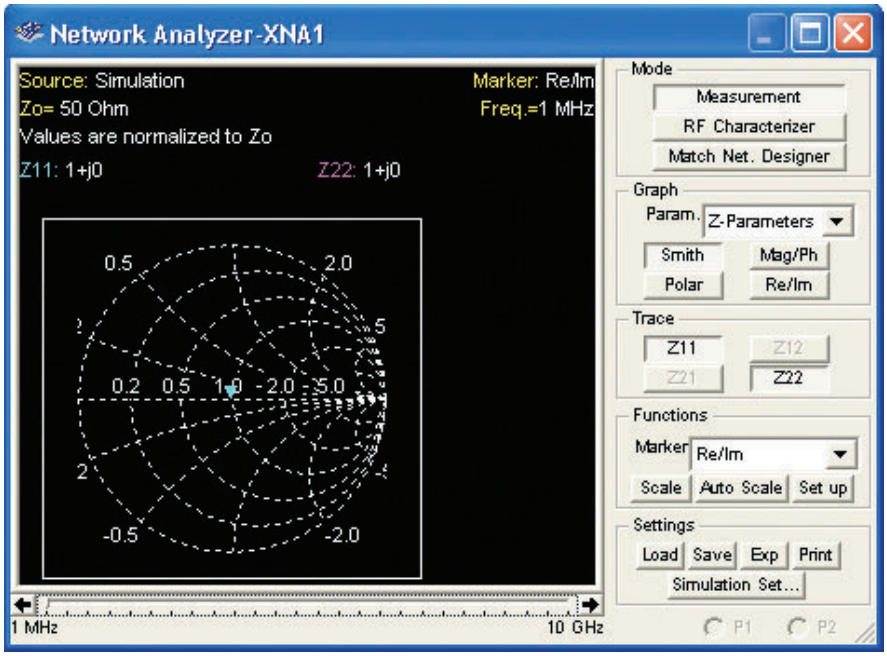


FIGURE 36 The Smith chart for the test of the 50-Ω resistor.

The Smith chart indicates the following:

$$Z_o = 50\ \Omega$$
$$Z_{11} = 1 + j0 \qquad \text{Values are normalized to } Z_o$$

The value $Z_{11} = 1 + j0$ indicates that the input impedance for the network being analyzed is purely resistive and its normalized value is 1, which translates to 50 Ω. Recall that the values on a Smith chart are divided by the normalized resistance. Notice the marker on the Smith chart located at 1.0 on the real axis. The 1.0 translates to 50 Ω, and this value is obtained by multiplying the Smith chart measured resistance of 1 Ω by the characteristic impedance of 50 Ω to obtain the actual resistance measured. In this case, the computed resistance is 50 Ω.

The frequency at which this calculation was made is shown in the upper-right corner of the Smith chart screen. In this case, a frequency of 1.0 MHz was used. At the bottom of the Smith chart is a slider that can be used to select the frequency being used to determine the impedance. Move the slider from one end to the other to see how the impedance values change through the frequency range. The frequency range is set by clicking on the **Simulation Set..** button at the bottom right of the network analyzer screen. Double-click on the **Simulation Set..** button to check the settings. You will notice the following:

| | |
|---|---|
| Start frequency | 1 MHz |
| Stop frequency | 10 GHz |
| Sweep type | Decade |
| Number of points per decade | 25 |
| Characteristic impedance $Z_o$ | 50 Ω |

The start and stop frequencies provide control of the frequency range when testing a network. The sweep type can be either decade or linear, but decade is used most of the time. The number of points per decade enables the user to control the resolution of the plotted trace displayed, and the characteristic impedance $Z_o$ provides for user control of the normalizing impedance.

The next two Multisim exercises provide examples of using the Multisim network analyzer to compute the impedances of simple *RC* and *RL* networks. These exercises will help you better understand the Smith chart results when analyzing complex impedances. Open the file **FigE12-1** at www.pearsoned.com/electronics. This example contains a simple *RC* network of $R = 25\ \Omega$ and $C = 6.4$ nF. The network analyzer is set to analyze the frequencies from 1 MHz to 100 MHz. The results of the simulation are shown in Figure 37. At 1 MHz, the normalized input impedance to the *RC* network shows that $Z_{11} = 0.5 - j0.497$. Multiplying these values by the normalized impedance of 50 Ω yields a $Z$ of approximately $25 - j25$, which is the expected value for this *RC* network at 1 MHz.

Next, open the file **FigE12-2** at www.pearsoned.com/electronics. This example contains a simple *RL* network of $R = 25\ \Omega$ and $L = 4\ \mu$H. The network analyzer is set to analyze the frequencies from 1 MHz to 10 GHz. The results of the simulation are shown in Figure 38. At 1 MHz, the normalized input impedance to the *RL* network shows that $Z_{11} = 0.5 + j0.5$. Multiplying these values by the normalized impedance of 50 Ω yields $Z = 25 + j25$, which is the expected value for this *RL* network at 1 MHz.

The following Electronics Workbench™ Multisim exercises provide additional experience with using the Multisim network analyzer and analyzing the results displayed on the Smith chart.

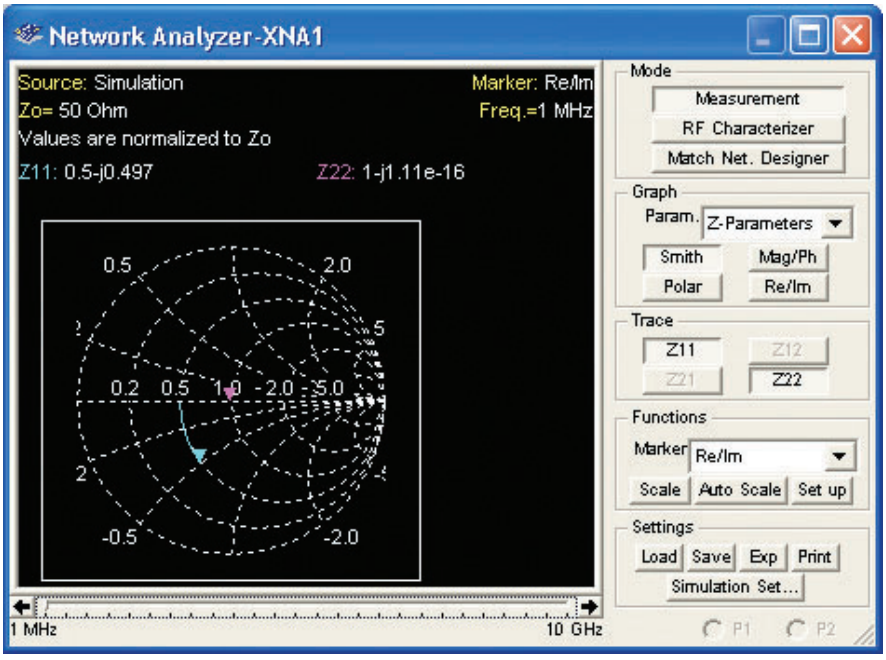


FIGURE 37 The Smith chart result for the simple *RC* network.

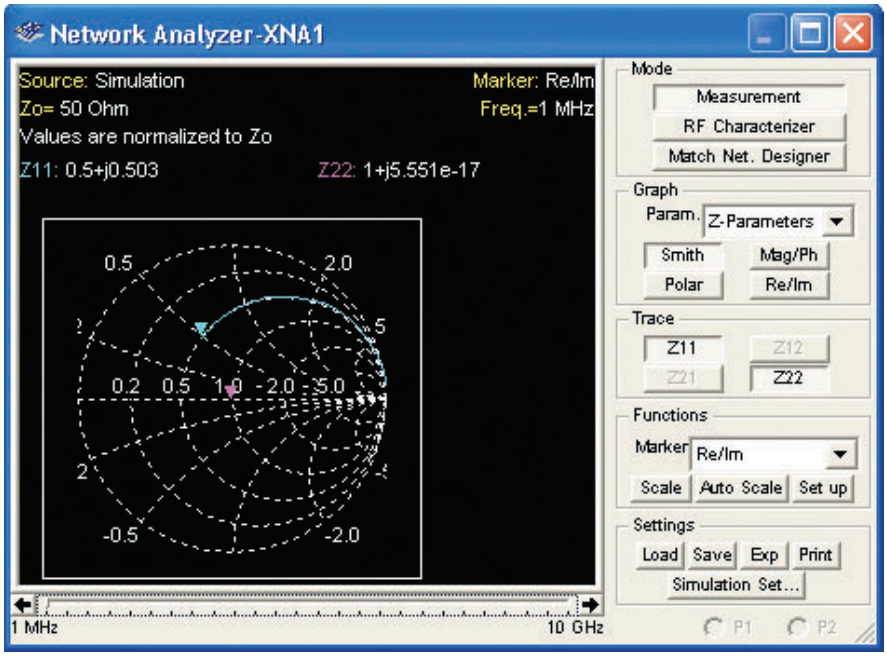


FIGURE 38 The Smith chart result for the simple *RL* network.

## Electronics Workbench™ Exercises

1. Open the file **FigE12-3** at www.pearsoned.com/electronics. Determine the impedance of this *RC* network at 10 GHz. ($Z = 25 - j1.59 \times 10^{-3}$)
2. Open the file **FigE12-4** at www.pearsoned.com/electronics. Determine the impedance of this *RL* network at 1 GHz and 10 GHz. *Note:* Don't forget to multiply the impedance displayed on the network analyzer by the characteristic impedance. ($Z = 25 + j62830$, $Z = 25.79 + j62.83E \times 10^4$, basically an open circuit)
3. Open the file **FigE12-5** at www.pearsoned.com/electronics. Use the Smith chart to determine the resonant frequency of the network. *Hint:* At resonance, a series *RLC* circuit will be resistive only. You must open the setup on the network analyzer to change the start frequency and improve the resolution of the plotted values by changing the number of points per decade to 50 so you can see at what frequency the impedance curve passes through the real axis. ($f = 50.11$ kHz)



## Summary

In this chapter we introduced basic transmission line theory. You learned that a basic wire doesn't just act like a strip of copper when the frequency is high enough. The major topics you should now understand include:

- the definition and types of transmission lines, including two-wire open line, twisted pair, shielded pair, and coaxial cable
- the key aspects for testing UTP

- the discussion of transmission line electrical characteristics, emphasizing characteristic impedance and the various line losses
- the explanation of dc voltage propagation, including velocity, delay, and reflections from both short-circuited and open-circuited lines
- the analysis of standing waves for open and shorted lines
- the definition of voltage standing wave ratio (VSWR), electrical length of a line, effects of a mismatched load, and use of a quarter-wavelength matching transformer
- the description of a Smith chart and its use in matching a load to a line
- the application of transmission lines as discrete circuit components, unbalanced-to-balanced transformers (baluns), and filters
- the testing of transmission lines using slotted lines and time-domain reflectometers



## Questions and Problems

### Section 2

1. Define *transmission line*. If a simple wire connection can be a transmission line, why is an entire chapter of study devoted to it?
2. In general terms, discuss the various types of transmission lines. Include the advantages and disadvantages of each type.

* 3. What would be the considerations in choosing a solid dielectric cable over a hollow pressurized cable for use as a transmission line?

* 4. Why is an inert gas sometimes placed within concentric radio-frequency transmission cables?

5. Where are twisted-pair cables often used?
6. What is meant by the CAT6/5e designation?
7. Define *near-end crosstalk* and *attenuation* relative to testing twisted-pair cable.
8. Describe three additional test considerations for twisted-pair cable with the enhanced data capabilities.
9. Explain how an unbalanced line differs from a balanced line.
10. Explain how the pickup of unwanted signals on a balanced transmission line is attenuated when converted to an unbalanced signal.
11. A balanced transmission line picks up an undesired signal with a 5-mW level. After conversion to an unbalanced signal using a center-tapped transformer, the undesired signal is 0.011$\mu$W. Calculate the common mode rejection ratio (CMRR). (56.6 dB)

### Section 3

12. Draw an equivalent circuit for a transmission line, and explain the physical significance of each element.
13. Provide a physical explanation for the meaning of a line's characteristic impedance ($Z_0$).
14. Calculate $Z_0$ for a line that exhibits an inductance of 4 nH/m and 1.5 pF/m. (51.6 $\Omega$)

---

* An asterisk preceding a number indicates a question that has been provided by the FCC as a study aid for licensing examinations.

15. Calculate the capacitance per meter of a 50-Ω cable that has an inductance of 55 nH/m. (22 pF/m)
16. In detail, explain how an impedance bridge can be used to determine $Z_0$ for a piece of transmission line.
* 17. If the spacing of the conductors in a two-wire radio-frequency transmission line is doubled, what change takes place in the surge impedance ($Z_0$) of the line?
* 18. If the conductors in a two-wire radio-frequency transmission are replaced by larger conductors, how is the surge impedance affected, assuming no change in the center-to-center spacing of the conductor?
* 19. What determines the surge impedance of a two-wire radio-frequency transmission line?
20. Determine $Z_0$ for the following transmission lines:
    (a) Parallel wire, air dielectric with $D/d = 3$. (215 Ω)
    (b) Coaxial line, air dielectric with $D/d = 1.5$. (24.3 Ω)
    (c) Coaxial line, polyethylene dielectric with $D/d = 2.5$. (36.2 Ω)
21. List and explain the various types of transmission line losses.
* 22. A long transmission line delivers 10 kW into an antenna; at the transmitter end, the line current is 5 A, and at the coupling house (load) it is 4.8 A. Assuming the line to be properly terminated and the losses in the coupling system to be negligible, what is the power lost in the line? (850 W)
23. Define *surge impedance*.

## Section 4

24. Derive the equation for the time required for energy to propagate through a transmission line [Equation (19)].
* 25. What is the velocity of propagation for radio-frequency waves in space?
26. A delay line using RG-8A/U cable is to exhibit a 5-ns delay. Calculate the required length of this cable. (3.39 ft)
27. Explain the significance of the velocity factor for a transmission line.
28. Determine the velocity of propagation of a 20-km line if the *LC* product is $7.5 \times 10^{-12}$ s$^2$. ($7.3 \times 10^9$ m/s)
29. What is the wavelength of the signal in Problem 28 if the signal's frequency is 500 GHz? (0.0146)
30. If the velocity of propagation of a 20-ft transmission line is 600 ft/s, how long will it take for the signal to get to the end of the line? (33.3 ms)

## Section 5

31. Define a *nonresonant transmission line,* and explain what its traveling waves are and how they behave.
* 32. An antenna is being fed by a properly terminated two-wire transmission line. The current in the line at the input end is 3 A. The surge impedance of the line is 500 Ω. How much power is being supplied to the line? (4.5 kW)
33. With the help of Figure 15, provide a charging analysis of a nonresonant line with an ac signal applied.

## Section 6

34. Explain the properties of a resonant transmission line. What happens to the energy reaching the end of a resonant line? Are reflections a generally desired result?



35. A dc voltage from a 20-V battery with $R_s = 75\ \Omega$ is applied to a 75-$\Omega$ transmission line at $t = 0$. It takes the battery's energy 10 $\mu$s to reach the load, which is an open circuit. Sketch current and voltage waveforms at the line's input and load.
36. Repeat Problem 35 for a short-circuited load.
37. What are *standing waves, standing wave ratio* (SWR), and *characteristic impedance,* in reference to transmission lines? How can standing waves be minimized?
38. With the help of Figure 19, explain how standing waves develop on a resonant line.
* 39. If the period of one complete cycle of a radio wave is 0.000001 s, what is the wavelength? (300 m)
* 40. If the two towers of a 950-kHz antenna are separated by 120 electrical degrees, what is the tower separation in feet? (345 ft)

## Section 7

41. Define *reflection coefficient,* $\Gamma$, in terms of incident and reflected voltage and also in terms of a line's load and characteristic impedances.
42. Express SWR in terms of
    (a) Voltage maximums and minimums.
    (b) Current maximums and minimums.
    (c) The reflection coefficient.
    (d) The line's load resistance and $Z_0$.
43. Explain the disadvantages of a mismatched transmission line.
* 44. What is the primary reason for terminating a transmission line in an impedance equal to the characteristic impedance of the line?
* 45. What is the ratio between the currents at the opposite ends of a transmission line one-quarter wavelength long and terminated in an impedance equal to its surge impedance?
46. An SSB transmitter at 2.27 MHz and 200 W output is connected to an antenna ($R_{in} = 150\ \Omega$) via 75 ft of RG-8A/U cable. Determine
    (a) The reflection coefficient.
    (b) The electrical cable length in wavelengths.
    (c) The SWR.
    (d) The amount of power absorbed by the antenna.
* 47. What should be the approximate surge impedance of a quarter-wavelength matching line used to match a 600-$\Omega$ feeder to a 70-$\Omega$ (resistive) antenna?

## Section 8

48. Calculate the impedance of a line 675 electrical degrees long. $Z_0 = 75\ \Omega$ and $Z_L = 50\ \Omega + j75\ \Omega$. Use the Smith chart *and* Equation (30) as separate solutions, and compare the results.
49. Convert an impedance, $62.5\ \Omega - j90\ \Omega$, to admittance mathematically *and* with the Smith chart. Compare the results.
50. Find the input impedance of a 100-$\Omega$ line, 5.35$\lambda$ long, and with $Z_L = 200\ \Omega + j300\ \Omega$.
* 51. Why is the impedance of a transmission line an important factor with respect to matching "out of a transmitter" into an antenna?
* 52. What is *stub tuning*?

53. The antenna load on a 150-Ω transmission line is 225 Ω − *j*300 Ω. Determine the length and position of a short-circuited stub necessary to provide a match.
54. Repeat Problem 53 for a 50-Ω line and an antenna of 25 Ω + *j*75 Ω.

## Section 9

55. Calculate the length of a short-circuited 50-Ω line necessary to simulate an inductance of 2 nH at 1 GHz.
56. Calculate the length of a short-circuited 50-Ω line necessary to simulate a capacitance of 50 pF at 500 MHz.
57. Describe two types of baluns, and explain their function.
* 58. How may harmonic radiation of a transmitter be prevented?
* 59. Describe three methods for reducing harmonic emission of a transmitter.
* 60. Draw a simple schematic diagram showing a method of coupling the radio-frequency output of the final power amplifier stage of a transmitter to a two-wire transmission line, with a method of suppression of second and third harmonic energy.
61. Explain the construction of a slotted line and some of its uses.
62. Explain the principle of TDR and some uses for this technique.
63. A pulse is sent down a transmission line that is not functioning properly. It has a propagation velocity of $2.1 \times 10^8$ m/s, and an inverted reflected pulse (equal in magnitude to the incident pulse) is returned in 0.731 ms. What is wrong with the line, and how far from the generator does the fault exist?
64. A fast-rise-time 10-V step voltage is applied to a 50-Ω line terminated with an 80-Ω resistive load. Determine Γ, $E_F$, and $E_r$. (0.231, 12.3 V, 2.3 V)

## Section 10

65. Describe some of the causes of crosstalk and list possible solutions.
66. Explain why cabling should not be run close to ac power lines.
67. List some of the causes of magnetic field losses in a cable.
68. Explain the effects of extreme sunlight (heat radiation) on cables.

## Questions for Critical Thinking

69. With the help of Figure 12, provide a step-by-step explanation of how a dc voltage propagates through a transmission line.
70. An open-circuited line is 1.75λ. Sketch the incident, reflected, and resultant waveforms for both voltage and current at the instant the generator is at its peak negative value. Sketch and compare the waveforms for a short-circuited line.
71. You are asked to design a line "free of transmission line effects." You design one that is λ/16 long. How would you justify this design?
72. Match a load of 25 Ω + *j*75 Ω to a 50-Ω line using a quarter-wavelength matching section. Determine the proper location and characteristic impedance of the matching section. Repeat this problem for a $Z_L = 110\ \Omega - j50\ \Omega$ load. Provide *two* separate solutions.

*This page intentionally left blank*

# WAVE PROPAGATION

From *Modern Electronic Communication*, Ninth Edition, Jeffrey S. Beasley, Gary M. Miller. Copyright © 2008 by Pearson Education, Inc. Published by Prentice Hall. All rights reserved.

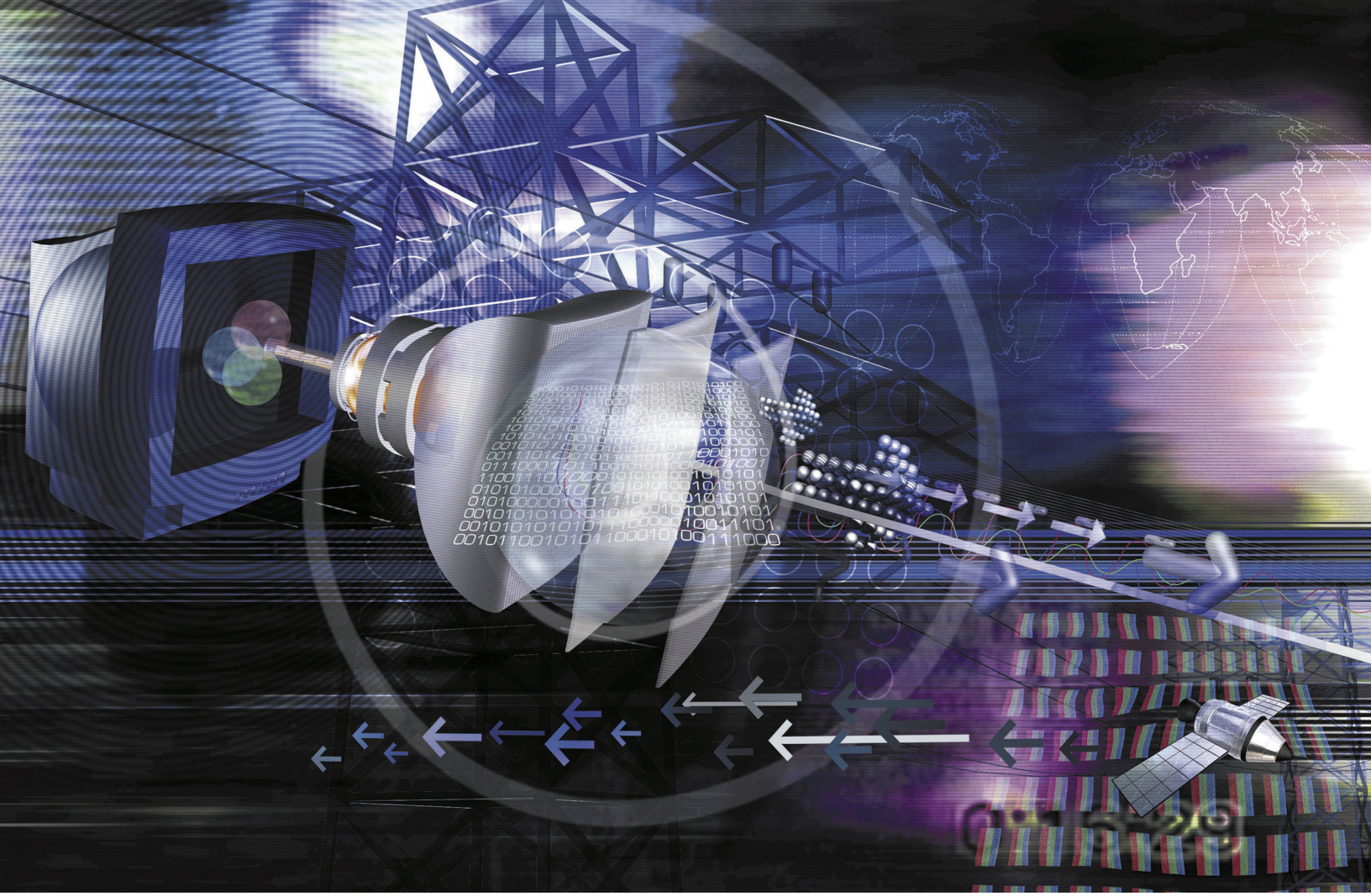

## Chapter Outline

1 Electrical to Electromagnetic Conversion
2 Electromagnetic Waves
3 Waves Not in Free Space
4 Ground- and Space-Wave Propagation
5 Sky-Wave Propagation
6 Satellite Communications
7 Figure of Merit and Link Budget Analysis
8 Troubleshooting
9 Troubleshooting with Electronics Workbench™ Multisim

## Objectives

- Discuss the makeup of an electromagnetic wave and the characteristics of an isotropic point source
- Explain the processes of wave reflection, refraction, and diffraction
- Describe ground- and space-wave propagation and calculate the ghosting effect in TV reception
- Calculate the approximate radio horizon based on antenna height
- Discuss the effects of the ionosphere on sky-wave propagation
- Define the critical angle and skip zone for sky-wave propagation
- Describe the important aspects of satellite communication
- Define the importance of figure of merit and link budget analysis

# WAVE PROPAGATION

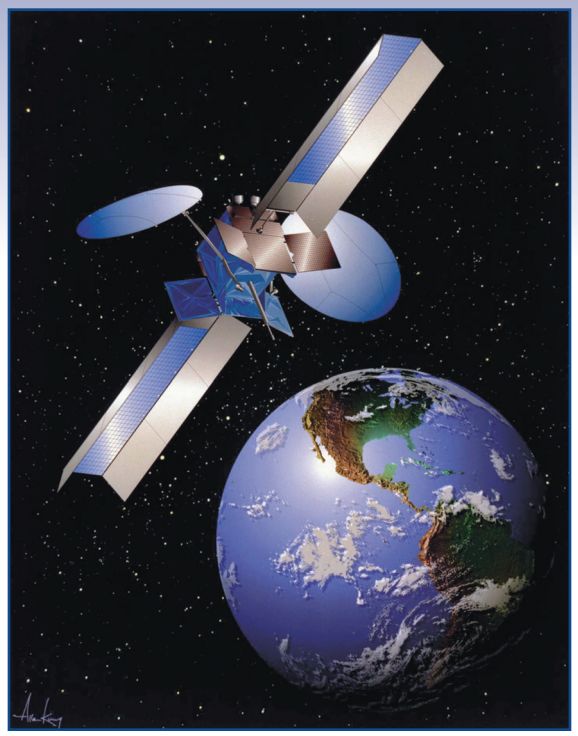

The Boeing model 702 “Rock” and “Roll” satellite used by XM satellite radio. (Courtesy of Boeing.)

## Key Terms

transducer
radio-frequency interference
electromagnetic interference
transverse polarization
isotropic point source
wavefront
coefficient of reflection
diffraction
shadow zone
ground wave
surface wave
radio horizon
ghosting
sky wave
skipping
isothermal region
critical frequency
critical angle
maximum usable frequency
optimum working frequency
quiet zone
skip zone
fading
diversity reception
geostationary orbit
uplink
downlink
transponder
earth station
sub-satellite point
attitude controls
footprint
perigee
apogee
low earth orbit (LEO) satellites
look angle
differential GPS
frequency division multiple access
time division multiple access
code division multiple access (CDMA)
figure of merit
satellite link budget
free space path loss



## 1 Electrical to Electromagnetic Conversion

Early radios were often referred to as the "wireless." This new machine could speak without being "wired" to the source like the telegraph and telephone. The transmitter's output is coupled to its surrounding atmosphere and then intercepted by the receiver. We know that the atmosphere is *not* a conductor of electrons like a copper wire—air is, in fact, a very good insulator. Thus, the electrical energy fed into a transmitting antenna must be converted to another form of energy for transmission. In this chapter we shall study the effects of the transformed energy and its propagation.

**Transducer**
device that converts energy from one form to another

The transmitting antenna converts its input electrical energy into electromagnetic energy. The antenna can thus be thought of as a **transducer**—a device that converts from one form of energy into another. In that respect, a light bulb is very similar to an antenna. The light bulb also converts electrical energy into electromagnetic energy—light. The only difference between light and the radio waves we shall be concerned with is their frequency. Light is an electromagnetic wave at about $5 \times 10^{14}$ Hz, while the usable radio waves extend from about $1.5 \times 10^{4}$ Hz up to $3 \times 10^{11}$ Hz. The human eye is responsive to (able to perceive) the very narrow range of light frequencies, and consequently we are blind to the radio waves. Actually, that is an advantage because the great number of radio waves surrounding our earth would otherwise paint a chaotic picture.

The receiving antenna intercepts the transmitted wave and converts it back into electrical energy. An analogous transducer is the photovoltaic cell that also converts a wave (light) into electrical energy. Because a basic knowledge of waves is necessary to your understanding of antennas and radio communications, the following section is presented prior to your study of wave propagation.



## 2 Electromagnetic Waves

Electricity and electromagnetic waves are interrelated. An electromagnetic field consists of an electric field and a magnetic field. These fields exist with all electric circuits because any current-carrying conductor creates a magnetic field around the conductor, and any two points in the circuit with a potential difference (voltage) between them create an electric field. These two fields contain energy, but in circuits, this field energy is usually returned to the circuit when the field collapses. If the field does not fully return its energy to the circuit, it means the wave has been at least partially *radiated,* or set free, from the circuit. This radiated energy is undesired because it may cause interference with other electronic equipment in the vicinity. It is termed **radio-frequency interference** (RFI) if it is undesired radiation from a radio transmitter, and if from another source, it is termed **electromagnetic interference** (EMI) or, more simply, noise.

**Radio-Frequency Interference**
undesired radiation from a radio transmitter

**Electromagnetic Interference**
unwanted signals from devices that produce excessive electromagnetic radiation

**Transverse**
when the oscillations of a wave are perpendicular to the direction of propagation

**Polarization**
the direction of the electric field of an electromagnetic wave

In the case of a radio transmitter, it is hoped that the antenna efficiently causes the wave energy to be set free. The antenna is designed *not* to allow the electromagnetic wave energy to collapse back into the circuit.

An electromagnetic wave is pictured in Figure 1. In it, $1\frac{1}{2}$ wavelengths of the electric field ($E$) and the magnetic field ($H$) are shown. The direction of propagation is shown to be perpendicular to both fields, which are also mutually perpendicular to each other. The wave is said to be **transverse** because the oscillations are perpendicular to the direction of propagation. The **polarization** of an electromagnetic

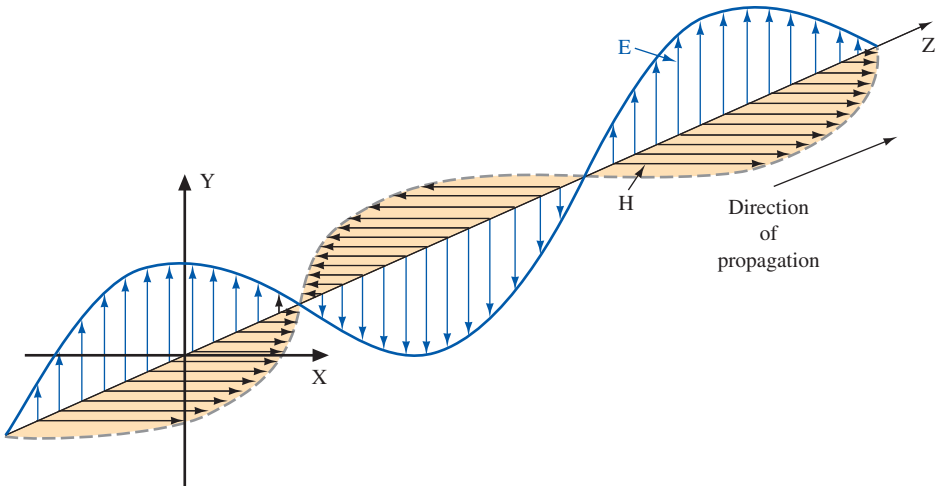


FIGURE 1 Electromagnetic wave.

wave is determined by the direction of its *E* field component. In Figure 1 the *E* field is vertical (*y* direction), and the wave is therefore said to be vertically polarized. As we will see, the antenna's orientation determines polarization. A vertical antenna results in a vertically polarized wave.

## Wavefronts

If an electromagnetic wave were radiated equally in all directions from a point source in free space, a spherical wavefront would result. Such a source is termed an **isotropic point source.** A **wavefront** may be defined as a surface joining all points of equal phase. Two wavefronts are shown in Figure 2. An *isotropic* source radiates equally in

**Isotropic Point Source**
a point in space that radiates electromagnetic radiation equally in all directions

**Wavefront**
a plane joining all points of equal phase in a wave

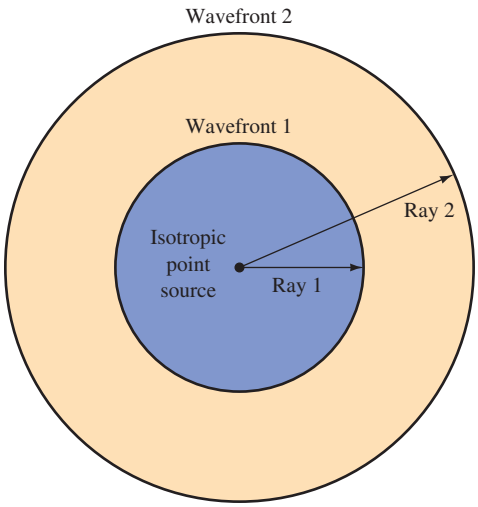


FIGURE 2 Antenna wavefronts.



Handheld meters measure electromagnetic fields. (Courtesy of Wandel & Goltermann. Reprinted with permission.)

all directions. The wave travels at the speed of light so that at some instant the energy will have reached the area indicated by wavefront 1 in Figure 2. The power density, $\mathcal{P}$ (in watts per square meter), at wavefront 1 is inversely proportional to the square of its distance, $r$ (in meters), from its source, with respect to the originally transmitted power, $P_t$. Stated mathematically,

$$\mathcal{P} = \frac{P_t}{4\pi r^2} \tag{1}$$

If wavefront 2 in Figure 2 is twice the distance of wavefront 1 from the source, then its power density in watts per unit area is just one-fourth that of wavefront 1. Any section of a wavefront is curved in shape. However, at appreciable distances from the source, small sections are nearly flat. These sections can then be considered as *plane wavefronts,* which simplifies the treatment of their optical properties provided in Section 3.

## Characteristic Impedance of Free Space

The strength of the electric field, $\mathscr{E}$ (in volts per meter), at a distance $r$ from a point source is given by

$$\mathscr{E} = \frac{\sqrt{30P_t}}{r} \tag{2}$$

where $P_t$ is the originally transmitted power in watts. This is one of Maxwell's equations, which were postulated in 1873 and allowed mathematical analysis of electromagnetic wave phenomena. They were experimentally verified by Hertz in 1888.

Power density $\mathscr{P}$ and the electric field $\mathscr{E}$ are related to impedance in the same way that power and voltage relate in an electric circuit. Thus,

$$\mathscr{P} = \frac{\mathscr{E}^2}{\mathscr{Z}} \tag{3}$$

where $\mathscr{Z}$ is the characteristic impedance of the medium conducting the wave. For free space, Equations (1) and (2) can be substituted into Equation (3) to give

$$\mathscr{Z} = \frac{\mathscr{E}^2}{\mathscr{P}} = \frac{30P_t}{r^2} \div \frac{P_t}{4\pi r^2} = 120\pi = 377\ \Omega \tag{4}$$

Thus, you can see that free space has an intrinsic impedance similar to a transmission line.

The characteristic impedance of any electromagnetic wave-conducting medium is provided by

$$\mathscr{Z} = \sqrt{\frac{\mu}{\epsilon}} \tag{5}$$

where $\mu$ is the medium's permeability and $\epsilon$ is the medium's permittivity.

For free space, $\mu = 1.26 \times 10^{-6}$ H/m and $\epsilon = 8.85 \times 10^{-12}$ F/m. Substituting in Equation (5) yields

$$\mathscr{Z} = \sqrt{\frac{\mu}{\epsilon}} = \sqrt{\frac{1.26 \times 10^{-6}}{8.85 \times 10^{-12}}} = 377\ \Omega$$

which agrees with the result from Equation (4).



# 3 Waves Not in Free Space

Until now, we have discussed the behavior of waves in free space, which is a vacuum or complete void. We now consider the effects of our environment on wave propagation.

## Reflection

Just as light waves are reflected by a mirror, radio waves are reflected by any medium such as metal surfaces or the earth's surface. The angle of incidence is equal to the angle of reflection, as shown in Figure 3. Note that there is a change in

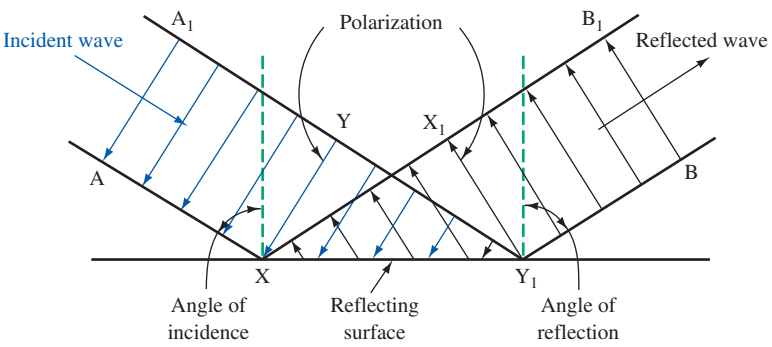


FIGURE 3 Reflection of a wavefront.

phase of the incident and reflected waves, as seen by the difference in the direction of polarization. The incident and reflected waves are 180° out of phase.

Complete reflection occurs only for a theoretically perfect conductor and when the electric field is perpendicular to the reflecting element. For complete reflection, the **coefficient of reflection** $\rho$ is 1 and is defined as the ratio of the reflected electric field intensity divided by the incident intensity. It is less than 1 in practical situations due to the absorption of energy by the nonperfect conductor and also because some of the energy actually propagates right through it.

**Coefficient of Reflection**
ratio of the reflected electric field intensity divided by the incident intensity

The previous discussion is valid when the electric field is *not* normal to the reflecting surface. If it is fully parallel to the reflecting (conductive) surface, the electric field is *shorted* out, and all of the electromagnetic energy is dissipated in the form of generated surface currents in the conductor. If the electric field is partially parallel to the surface, it will be partially shorted out.

If the reflecting surface is curved, as in a parabolic antenna, the wave may be analyzed using the appropriate optical laws with regard to focusing the energy, etc. This is especially true with respect to microwave frequencies.

## Refraction

Refraction of electromagnetic radio waves occurs in a manner akin to the refraction of light. Refraction occurs when waves pass from a medium of one density to another medium with a different density. A good example is the apparent bending of a spoon when it is immersed in water. The bending seems to take place at the water's surface, or exactly at the point where there is a change of density. Obviously, the spoon does not bend from the pressure of the water. The light forming the image of the spoon is bent as it passes from the water, a medium of high density, to the air, a medium of comparatively low density.

The bending (refraction) of an electromagnetic wave (light or radio wave) is shown in Figure 4. Also shown is the reflected wave. Obviously, the coefficient of reflection is less than 1 here because a fair amount of the incident wave's energy is propagated through the water—after refraction has occurred.

The angle of incidence, $\theta_1$, and the angle of refraction, $\theta_2$, are related by the following expression, which is Snell's law:

$$n_1 \sin \theta_1 = n_2 \sin \theta_2 \qquad (6)$$

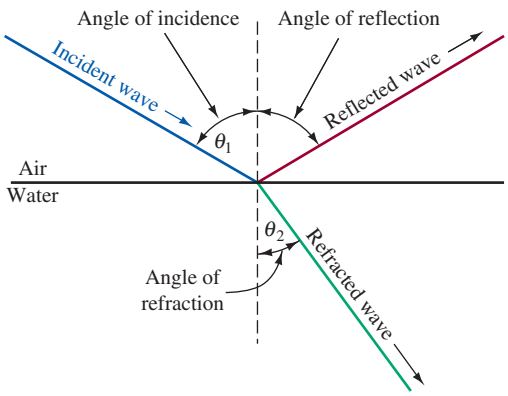


FIGURE 4 Wave refraction and reflection.

where $n_1$ is the refractive index of the incident medium and $n_2$ is the refractive index of the refractive medium. Recall that the refractive index for a vacuum is exactly 1 and it is approximately 1 for the atmosphere. For glass, it is about 1.5, and for water it is 1.33.

## Diffraction

**Diffraction** is the phenomenon whereby waves traveling in straight paths bend around an obstacle. This effect is the result of Huygens' principle, advanced by the Dutch astronomer Christian Huygens in 1690. The principle states that each point on a spherical wavefront may be considered as the source of a secondary spherical wavefront. This concept is important to us because it explains radio reception behind a mountain or tall building. Figure 5 shows the diffraction process allowing reception beyond a mountain in all but a small area, which is called the **shadow zone.** The figure shows that electromagnetic waves are diffracted over the top and around the sides of an obstruction. The direct wavefronts that just get by the obstruction

**Diffraction**
the phenomenon whereby waves traveling in straight paths bend around an obstacle

**Shadow Zone**
an area following an obstacle that does not receive a wave by diffraction

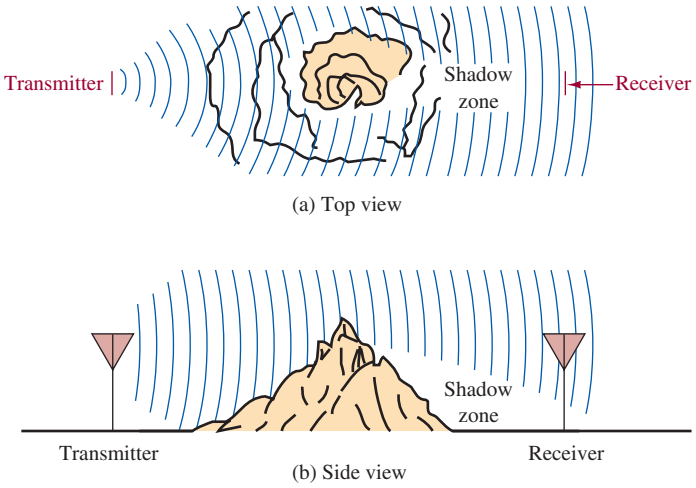


FIGURE 5 Diffraction around an object.

become new sources of wavefronts that start filling in the void, making the shadow zone a finite entity. The lower the frequency of the wave, the quicker is this process of diffraction (i.e., the shadow zone is smaller).



## 4 Ground- and Space-Wave Propagation

There are four basic modes of getting a radio wave from the transmitting to receiving antenna:

1. Ground wave
2. Space wave
3. Sky wave
4. Satellite communications

As we will see in the following discussions, the frequency of the radio wave is of primary importance in considering the performance of each type of propagation.

### Ground-Wave Propagation

**Ground Wave**
radio wave that travels along the earth's surface

**Surface Wave**
another name for ground wave

A **ground wave** is a radio wave that travels along the earth's surface. It is sometimes referred to as a **surface wave.** The ground wave must be vertically polarized (electric field vertical) because the earth would short out the electric field if horizontally polarized. Changes in terrain have a strong effect on ground waves. Attenuation of ground waves is directly related to the surface impedance of the earth. This impedance is a function of conductivity and frequency. If the earth's surface is highly conductive, the absorption of wave energy, and thus its attenuation, will be reduced. Ground-wave propagation is much better over water (especially salt water) than, say, a very dry (poor conductivity) desert terrain.

The ground losses increase rapidly with increasing frequency. For this reason ground waves are not very effective at frequencies above 2 MHz. Ground waves are, however, a very reliable communications link. Reception is not affected by daily or seasonal changes such as with sky-wave propagation.

Ground-wave propagation is the only way to communicate into the ocean with submarines. Extremely low frequency (ELF) propagation is utilized. ELF waves encompass the range 30 to 300 Hz. At a typically used frequency of 100 Hz, the attenuation is about 0.3 dB/m. This attenuation increases steadily with frequency so that, at 1 GHz, a 1000-dB/m loss is sustained! Seawater has little attenuation to ELF signals, so these frequencies can be used to communicate with submerged submarines without their having to surface and be vulnerable to detection.

### Space-Wave Propagation

The two types of space waves are shown in Figure 6. They are the direct wave and ground reflected wave. Do not confuse these with the ground wave just discussed. The direct wave is by far the most widely used mode of antenna communications. The propagated wave is direct from transmitting to receiving antenna and does not travel along the ground. The earth's surface, therefore, does not attenuate it.

The direct space wave does have one severe limitation—it is basically limited to so-called *line-of-sight* transmission distances. Thus, the antenna height and

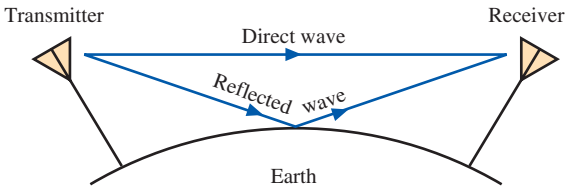


FIGURE 6 Direct and ground reflected space waves.

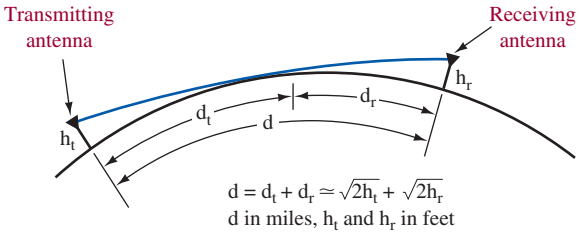


FIGURE 7 Radio horizon for direct space waves.

the curvature of the earth are the limiting factors. The actual **radio horizon** is about $\frac{4}{3}$ greater than the geometric line of sight because of diffraction effects and is empirically predicted by the following approximation:

**Radio Horizon**
a distance about $\frac{4}{3}$ greater than line-of-sight, approximate limit for direct space-wave propagation

$$d \simeq \sqrt{2h_t} + \sqrt{2h_r} \tag{7}$$

where $d$ = radio horizon (mi)
$h_t$ = transmitting antenna height (ft)
$h_r$ = receiving antenna height (ft)

The diffraction effects cause the slight wave curvature, as shown in Figure 7. If the transmitting antenna is 1000 ft above ground level and the receiving antenna is 20 ft high, a radio horizon of about 50 mi results. This explains the coverage that typical broadcast FM and TV stations provide because they are utilizing direct space-wave propagation.

The reflected wave shown in Figure 6 can cause reception problems. If the phase of these two received components is not the same, some degree of signal fading and/or distortion will occur. This can also result when both a direct and ground wave are received or when any two or more signal paths exist. A special case involving TV reception is presented next.

***Ghosting in TV Reception*** Any tall or massive objects obstruct space waves. This results in diffraction (and subsequent shadow zones) and reflections. Reflections pose a specific problem because, for example, reception of a TV signal may be the combined result of a direct space wave and a reflected space wave, as shown in Figure 8. This condition results in **ghosting,** which manifests itself in the form of a double-image distortion. This is due to the two signals arriving at the receiver at two different times—the reflected signal has a farther distance to travel. The reflected signal is weaker than the direct signal because of the inverse square-law relationship of signal strength to distance [Equation (1)] and because of losses incurred during reflection.

**Ghosting**
when the same signal arrives at the TV receiver at two different times; the reflected signal has farther to travel and is weaker than the direct signal, resulting in a double image

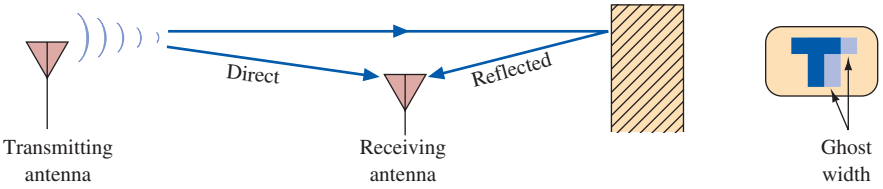


FIGURE 8 Ghost interference.

## Example 1

*Determine the ghost width on a TV screen 15 in. wide when a reflected wave results from an object $\frac{1}{2}$ mi "behind" a receiver.*

### Solution

The reflected wave travels 1 mi farther than the direct wave ( $2 \times 0.5$ mi). Each horizontal line on the receiver is 53.5 $\mu$s in duration. Assuming the wave travels at the speed of light, the time of delay between the direct and reflected signal is

$$t = \frac{d}{v} = \frac{1 \text{ mi}}{186{,}000 \text{ mi/s}} = 5.38 \ \mu\text{s}$$

The ghost width will therefore be

$$\frac{5.38 \ \mu\text{s}}{53.5 \ \mu\text{s/trace}} \times 15 \text{ in.} = 1.51 \text{ in.}$$




Ghosting is seen in the image on the left. (Courtesy of Philips Consumer Electronics. Reprinted with permission.)

A possible solution to the ghosting problem shown in Example 1 is to detune the receiving antenna orientation so that the reflected wave is too weak to be displayed. Of course, the direct wave must exceed the receiver's sensitivity limit because it will also be reduced in level when the antenna is detuned. It should be noted that ghosting can also be caused by transmission line reflections between antenna and set.



## 5 Sky-Wave Propagation

One of the most frequently used methods of long-distance transmission is by the use of the **sky wave.** Sky waves are those waves radiated from the transmitting antenna in a direction that produces a large angle with reference to the earth. The sky wave has the ability to strike the ionosphere, be refracted from it to the ground, strike the ground, be reflected back toward the ionosphere, and so on. The refracting and reflecting action of the ionosphere and the ground is called **skipping.** An illustration of this skipping effect is shown in Figure 9.

**Sky Wave**
those radio waves radiated from the transmitting antenna in a direction toward the ionosphere

**Skipping**
the alternate refracting and reflecting of a sky wave signal between the ionosphere and the earth's surface

The transmitted wave leaves the antenna at point *A*, is refracted from the ionosphere at point *B*, is reflected from the ground at point *C*, is again refracted from the ionosphere at point *D*, and arrives at the receiving antenna *E*. The critical nature of the sky waves and the requirements for refraction will be discussed thoroughly in this section.

To understand the process of refraction, the composition of the atmosphere and the factors that affect it must be considered. Insofar as electromagnetic radiation is concerned, there are only three layers of the atmosphere: the troposphere, the stratosphere, and the ionosphere. The troposphere extends from the surface of the earth up to approximately 6.5 mi. The next layer, the stratosphere, extends from the upper limit of the troposphere to an approximate elevation of 23 mi. From the upper limit of the stratosphere to a distance of approximately 250 mi lies the region known as the ionosphere. Beyond the ionosphere is free space. The temperature in the stratosphere is considered to be a constant unfluctuating value. Therefore, it is not subject to temperature inversions, nor can it cause significant refractions. The constant temperature stratosphere is also called the **isothermal region.**

**Isothermal Region**
the stratosphere, considered to have a constant temperature

The ionosphere is appropriately titled because it is composed primarily of ionized particles. The density at the upper extremities of the ionosphere is very low

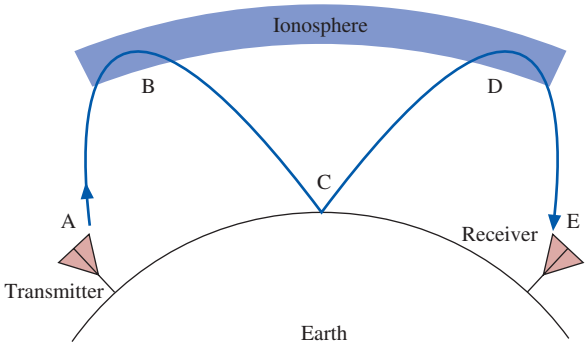


FIGURE 9 Sky-wave propagation.

and becomes progressively higher as it extends downward toward the earth. The upper region of the ionosphere is subjected to severe radiation from the sun. Ultraviolet radiation from the sun causes ionization of the air into free electrons, positive ions, and negative ions. Even though the density of the air molecules in the upper ionosphere is small, the radiation particles from space are of such high energy at that point that they cause wide-scale ionization of the air molecules that are present. This ionization extends down through the ionosphere with diminishing intensity. Therefore, the highest degree of ionization occurs at the upper extremities of the ionosphere, while the lowest degree occurs in the lower portion of the ionosphere.

## Ionospheric Layers

The ionosphere is composed of three layers designated, respectively, from lowest level to highest level as *D*, *E*, and *F*. The *F* layer is further divided into two layers designated $F_1$ (the lower layer) and $F_2$ (the higher layer). The presence or absence of these layers in the ionosphere and their height above the earth vary with the position of the sun. At high noon, radiation from the sun in the ionosphere directly above a given point is greatest, while at night it is minimal. When the radiation is removed, many of the ions that were ionized recombine. The interval of time between these conditions finds the position and number of the ionized layers within the ionosphere changing. Because the position of the sun varies daily, monthly, and yearly with respect to a specified point on earth, the exact characteristics of the layers are extremely difficult to predict. However, the following general statements can be made:

1. The *D* layer ranges from about 25 to 55 mi. Ionization in the *D* layer is low because it is the lowest region of the ionosphere (farthest from the sun). This layer has the ability to refract signals of low frequencies. High frequencies pass right through it but are partially attenuated in so doing. After sunset, the *D* layer disappears because of the rapid recombination of its ions.
2. The *E* layer limits are from approximately 55 to 90 mi high. This layer is also known as the Kennelly–Heaviside layer because these two men were the first to propose its existence. The rate of ionic recombination in this layer is rather rapid after sunset and is almost complete by midnight. This layer has the ability to refract signals of a higher frequency than were refracted by the *D* layer. In fact, the *E* layer can refract signals with frequencies as high as 20 MHz.
3. The *F* layer exists from about 90 to 250 mi. During the daylight hours, the *F* layer separates into two layers, the $F_1$ and $F_2$ layers. The ionization level in these layers is quite high and varies widely during the course of a day. At noon, this portion of the atmosphere is closest to the sun, and the degree of ionization is maximum. The atmosphere is rarefied at these heights, so the recombination of the ions occurs slowly after sunset. Therefore, a fairly constant ionized layer is present at all times. The *F* layers are responsible for high-frequency, long-distance transmission due to refraction for frequencies up to 30 MHz.

The relative distribution of the ionospheric layers is shown in Figure 10. With the disappearance of the *D* and *E* layers at night, signals normally refracted by these layers are refracted by the much higher layer, resulting in greater skip distances at night. The layers that form the ionosphere undergo considerable variations in altitude, density, and thickness, due primarily to varying degrees of solar activity. The $F_2$ layer

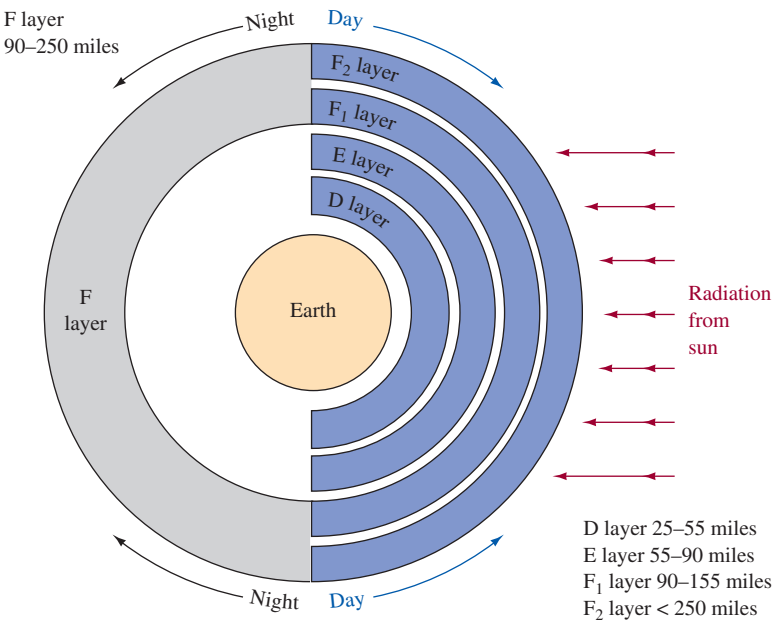


FIGURE 10 Layers of the ionosphere.

undergoes the greatest variation due to solar disturbances (sunspot activity). There is a greater concentration of solar radiation in the earth's atmosphere during peak sunspot activity, which recurs in 11-year cycles. During periods of maximum sunspot activity, the *F* layer is more dense and occurs at a higher altitude. During periods of minimum sunspot activity, the lower altitude of the *F* layer returns the sky waves (dashed lines) to points relatively close to the transmitter compared with the higher altitude *F* layer occurring during maximum sunspot activity. Consequently, skip distance is affected by the degree of solar disturbance.

## Effects of the Ionosphere on the Sky Wave

The ability of the ionosphere to return a radio wave to the earth depends on the ion density, the frequency of the radio wave, and the angle of transmission. The refractive ability of the ionosphere increases with the degree of ionization. The degree of ionization is greater in summer than in winter and is also greater during the day than at night. As mentioned previously, abnormally high densities occur during times of peak sunspot activity.

***Critical Frequency*** If the frequency of a radio wave being transmitted vertically is gradually increased, a point is reached where the wave is not refracted sufficiently to curve its path back to earth. Instead, these waves continue upward to the next layer, where refraction continues. If the frequency is sufficiently high, the wave penetrates all layers of the ionosphere and continues out into space. The highest frequency that is returned to earth when transmitted vertically under given ionospheric conditions is called the **critical frequency.**

**Critical Frequency**
the highest frequency that will be returned to the earth when transmitted vertically under given ionospheric conditions

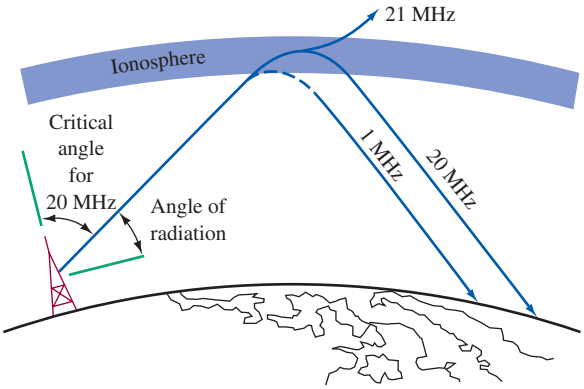


FIGURE 11 Relationship of frequency to refraction by the ionosphere.

***Critical Angle*** In general, the lower the frequency, the more easily the signal is refracted; conversely, the higher the frequency, the more difficult is the refracting or bending process. Figure 11 illustrates this point. The angle of radiation plays an important part in determining whether a particular frequency is returned to earth by refraction from the ionosphere. Above a certain frequency, waves transmitted vertically continue into space. However, if the angle of propagation is lowered (from the vertical), a portion of the high-frequency waves below the critical frequency is returned to earth. The highest angle at which a wave of a specific frequency can be propagated and still be returned (refracted) from the ionosphere is called the **critical angle** for that particular frequency. The critical angle is the angle that the wavefront path makes with a line extended to the center of the earth. Refer to Figure 11, which shows the critical angle for 20 MHz. Any wave above 20 MHz (e.g., the 21-MHz wave shown) is not refracted back to earth but goes through the ionosphere and into space.

**Critical Angle**
the highest angle with respect to a vertical line at which a radio wave of a specified frequency can be propagated and still be returned to the earth from the ionosphere

***Maximum Usable Frequency (MUF)*** There is a best frequency for optimum communication between any two points at any specific condition of the ionosphere. As you can see in Figure 12, the distance between the transmitting antenna and the point at which the wave returns to earth depends on the angle of propagation, which in turn is limited by the frequency. The highest frequency that is returned to earth at a given distance is called the **maximum usable frequency** (MUF) and has an average monthly value for any given time of the year. The **optimum working frequency** is the one that provides the most consistent communication and is

**Maximum Usable Frequency**
the highest frequency that is returned to the earth from the ionosphere between two specific points on earth

**Optimum Working Frequency**
the frequency that provides for the most consistent communication path via sky waves

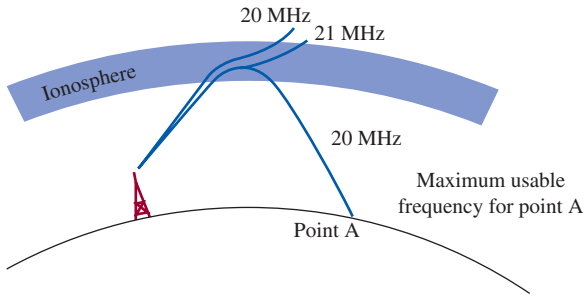


FIGURE 12 Relationship of frequency to critical angle.

therefore the best one to use. For transmission using the $F_2$ layer, the optimum working frequency is about 85 percent of the MUF, while propagation via the *E* layer is consistent, in most cases, if a frequency near the MUF is used. Because ionospheric attenuation of radio waves is inversely proportional to frequency, using the MUF results in maximum signal strength.

Because of this variation in the critical frequency, nomograms and frequency tables are used to predict the maximum usable frequency for every hour of the day for every locality in which transmissions are made. This information is prepared from data obtained experimentally from stations scattered all over the world. All this information is pooled, and the results are tabulated in the form of long-range predictions that remove most of the guess-work from this type of radio communications.

The U.S. government transmits propagation data on a regular basis. The two stations are WWV, Fort Collins, Colorado, at 18 minutes past every hour on frequencies of 2.5, 5, 10, 15 and 20 MHz; and WWVH, Hawaii, on 5, 10 and 15 MHz, 45 minutes past every hour. These stations transmit the A and K indices and the solar flux, which can be used to predict MUF as well as other propagation characteristics. The K index, from 0 to 8, is a measure of the earth's geomagnetic activity. A value above approximately 4 indicates a geomagnetic storm with severe effects on radio communications. The K index is updated every three hours and shows useful "trend" information. The A index is open-ended; that is, it has no maximum value, but readings above about 100 or so are rare. Values of perhaps 10 or lower indicate quiet conditions and good propagation. Based on the K index, the A index is updated every 24 hours at 1800 UT. Solar flux is a measure of sunspot activity. Like the A index, low values indicate good propagation.

**Quiet Zone**
between the point where the ground wave is completely dissipated and the point where the first sky wave is received

**Skip Zone**
another name for quiet zone

***Skip Zone*** Between the point where the ground wave is completely dissipated and the point where the first sky wave returns, *no* signal will be heard. This area is called the **quiet** or **skip zone** and is shown in Figure 13. You can see that the skip zone occurs for a given frequency, when propagated at its critical angle. The skip zone is the distance from the end of ground-wave reception to the point of the first sky-wave reception. This occurs for the energy propagated at the critical angle. Similarly, the skip distance is the minimum distance from the transmitter to where the sky wave can be returned to earth and also occurs for energy propagated at the critical angle.

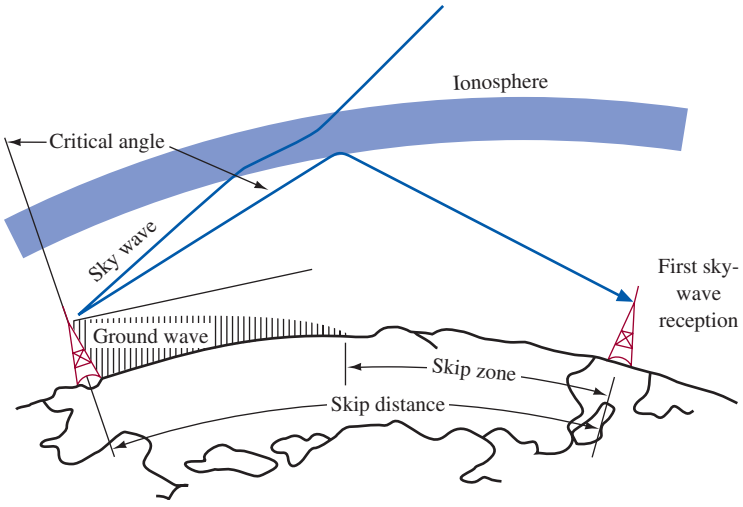


FIGURE 13 Skip zone.

**Fading**
variations in signal strength that may occur at the receiver over a period of time

***Fading*** **Fading** is a term used to describe variations in signal strength that occur at a receiver during the time a signal is being received. Fading may occur at any point where both the ground wave and the sky wave are received, as shown in Figure 14(a). The two waves may arrive out of phase, thus producing a cancellation of the usable signal. This type of fading is encountered in long-range communications over bodies of water where ground-wave propagation extends for a relatively long distance. In areas where sky-wave propagation is prevalent, fading may be caused by two sky waves traveling different distances, thereby arriving at the same point out of phase, as shown in Figure 14(b). Such a condition may be caused by a portion of the transmitted wave being refracted by the *E* layer while another portion of the wave is refracted by the *F* layer. A complete cancellation of the signal would occur if the two waves arrived 180° out of phase with equal amplitudes. Usually, one signal is weaker than the other, and therefore a usable signal may be obtained.

Because the ionosphere causes somewhat different effects on different frequencies, a received signal may have phase distortion. SSB is least susceptible to phase distortion problems. FM is so susceptible to these effects that it is rarely used below 30 MHz (where sky waves are possible). The greater the bandwidth, the greater the problem with phase distortion.

Frequency blackouts are closely related to certain types of fading, some of which are severe enough to blank out the transmission completely. The changing conditions in the ionosphere shortly before sunrise and shortly after sunset may

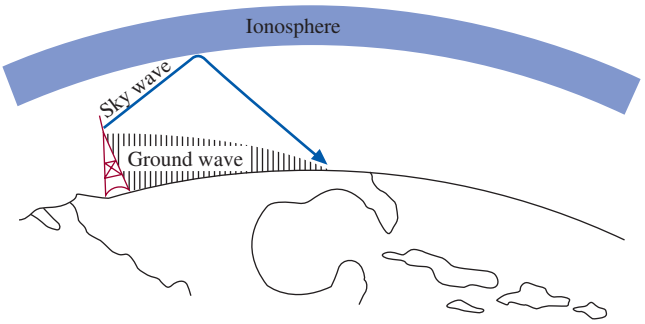


(a) Fading caused by arrival of ground wave and sky wave at the same point out of phase

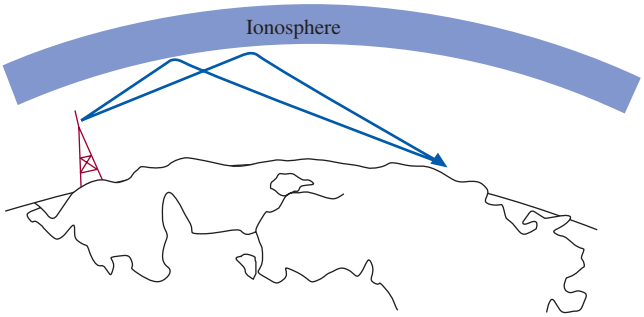


(b) Fading caused by arrival of two sky waves at the same point out of phase

FIGURE 14 Fading.

cause complete blackouts at certain frequencies. The higher-frequency signals may then pass through the ionosphere, while the lower-frequency signals are absorbed.

Ionospheric storms (turbulent conditions in the ionosphere) often cause radio communications to become erratic. Some frequencies will be completely blacked out, while others may be reinforced. Sometimes these storms develop in a few minutes, and at other times they require as much as several hours to develop. A storm may last several days.

## Tropospheric Scatter

Tropospheric scatter transmission can be considered as a special case of sky-wave propagation. Instead of aiming the signal toward the ionosphere, however, it is aimed at the troposphere. The troposphere ends just 6.5 mi above the earth's surface. Frequencies from about 350 MHz to 10 GHz are commonly used with reliable communications paths of up to 400 mi.

The scattering process is illustrated in Figure 15. As shown, two directional antennas are pointed so that their beams intersect in the troposphere. The great majority of the transmitted energy travels straight up into space. However, by a little-understood process, a small amount of energy is *scattered* in the forward direction. As shown in Figure 15, some energy is also scattered in undesired directions. The best and most widely used frequencies are around 0.9, 2, and 5 GHz. Even then, however, the received signal is only one-millionth to one-billionth of the transmitted power. There is an obvious need for high-powered transmitters and extremely sensitive receivers. In addition, the scattering process is subject to two forms of fading. The first is due to multipath transmissions within the scattering path, with the effect occurring as quickly as several times per minute. Atmospheric changes provide a second, but slower, change in the received signal strength.

To accommodate these severe fading problems, some form of **diversity reception** is always used. This is the process of transmitting and/or receiving several signals and then either adding them all together at the receiver or selecting

**Diversity Reception** transmitting and/or receiving several signals and either adding them together at the receiver or selecting the best one at any given instant

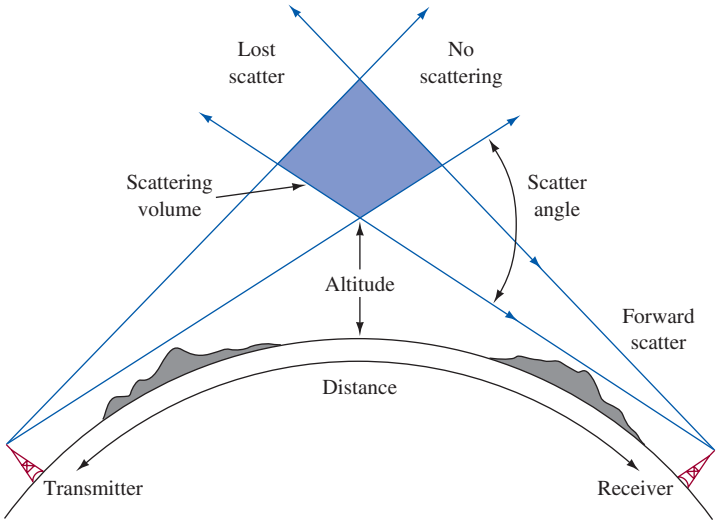


FIGURE 15 Tropospheric scatter.

the best one at any given instant. The types of diversity reception utilized include one or combinations of the following:

*Space diversity:* comprising two or more receiving antennas separated by 50 wavelengths or more. The best received signal at any instant is selected as input for the receiver.

*Frequency diversity:* transmission of the same information on slightly different frequencies. The different frequencies fade independently even when transmitted and received through the same antennas.

*Angle diversity:* transmission of information at two or more slightly different angles. This results in two or more paths based on illuminating different scattering volumes in the troposphere.

*Polarization diversity:* the capability of receiving horizontally and vertically polarized signals.

In spite of the high-power and diversity requirements and the more recent satellite communications, the use of tropospheric scatter continues since its first use in 1955. It provides reliable long-distance communication links in areas such as deserts and mountain regions and between islands. It is used for voice and data links by the military and commercial users.



## 6 Satellite Communications

**Geostationary Orbit**
this term refers to a satellite located at a fixed point approximately 22,300 miles in altitude above the equator; sometimes called *geosynchronous* or *synchronous orbit*

**Uplink**
sending signal to a satellite

**Downlink**
a satellite sending signals to earth

**Earth Station**
the satellite uplink and downlink (ground base station) which will typically be transmitting and receiving data, video and/or audio.

**Transponder**
electronic system for performing reception, frequency translation, and re-transmission

**Attitude Controls**
used for orbital corrections (station keeping) on the satellite

Our final category of wave propagation is satellite communications (SATCOM). Communications via satellite is possible because of the placement of the satellites in **geostationary orbit** (sometimes called *geosynchronous* or *synchronous orbit*). This means that the satellite is located at a fixed point approximately 22,300 miles in altitude above the equator. At this altitude, the gravitational pulls of the earth, the sun, and the moon work together, along with the centrifugal force caused by the satellite's rotation around the earth to keep the satellite at a fixed location above the earth. Of course, the satellite does drift (it moves in a figure-eight pattern) and must be periodically repositioned by on-board power thrusters to maintain the optimum location. But for us on earth, the satellite appears to be stationary.

The satellite communication system consists of the following:

- **Uplink** (transmitter)
- Orbiting satellite
- **Downlink** (receiver)

The uplink and downlink are called an **earth station** (ground base station), which will be typically transmitting and receiving data, video and/or audio, or it can be a receiving only site. Included in the earth station are items such as the exciter, the high-power TWTAs (traveling wave tube amplifiers—also called high power amplifiers [HPAs]), a parabolic shaped reflector that is pointing at the satellites parked in geostationary orbit, and a receiver.

The satellites require a payload of antennas, transponders, and attitude controls for maintaining their location in geostationary orbit. The **transponder** is an electronic system performing reception, frequency translation, and retransmission. The **attitude controls** are used for orbital corrections (station keeping) on the satellite. These corrections are made approximately every 2 to 6 weeks. Geostationary satellites are parked over the equator (latitude = 0°) in orbit at a fixed longitude. The longitudinal position

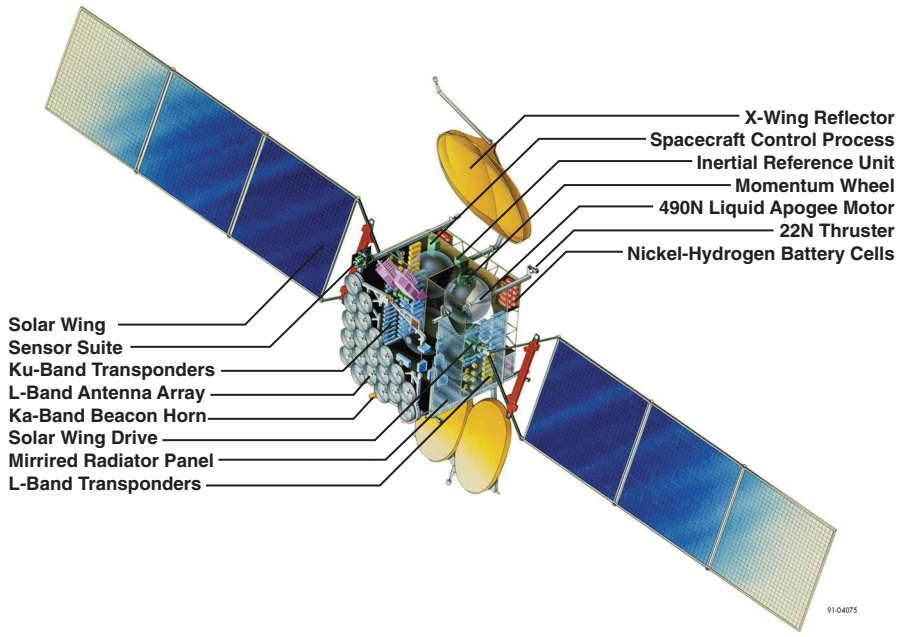


FIGURE 16 A detailed view of the Boeing 601 satellite. (Courtesy of Boeing.)

is referenced to earth at the **subsatellite point.** The subsatellite point is the point on the earth's surface where a line drawn from the satellite to the center of the earth intersects the earth's surface. The minimum spacing of the satellites is currently 2°.

**Subsatellite Point**
point on the earth's surface where a line drawn from the satellite to the center of the earth intersects the earth's surface.

An example of a geostationary satellite is the Boeing 601 first introduced in 1987. Boeing satellites are used for applications that include DirecTV, very small aperture (VSAT) business networks, as well as mobile satellite communications. The basic Boeing 601 configuration has up to 48 transponders and 4800 watts of power. The Boeing 601 HP (High Power version), first introduced in 1995, supports up to 60 transponders and will provide up to 10,000 watts of power. A detailed picture of the satellite is provided in Figure 16.

Geostationary satellite communication has many advantages over terrestrial microwave communications and low-earth orbit satellites. The geostationary satellite position has a fixed position with respect to the earth, therefore expensive tracking systems are not required. The path to and from the satellite is always available, except during certain weather conditions and solar disturbances. The satellite's transmission back to earth covers a limited coverage area called a **footprint,** which is a geographical representation of a satellite's radiation pattern on the earth. The footprint has contour lines showing areas of receiver power density expressed in dBW (dB Watts). The radiation patterns are used to determine the expected satellite's signal strength when making link budget calculations (see Section 7). An example of a satellite footprint is provided in Figure 17.

**Footprint**
a map of the satellite's coverage area for the transmission back to earth

Some disadvantages to geostationary satellites are propagation delays because of the distance to and from the satellite (approximately 44,600 miles round trip). Satellite transmitters require more power because of the increased distance, resulting in additional transmitter costs. (It is difficult to fabricate high-power amplifiers that operate at high frequencies). The last disadvantage is that there is a significant cost in maintaining a satellite parked in geostationary orbit.

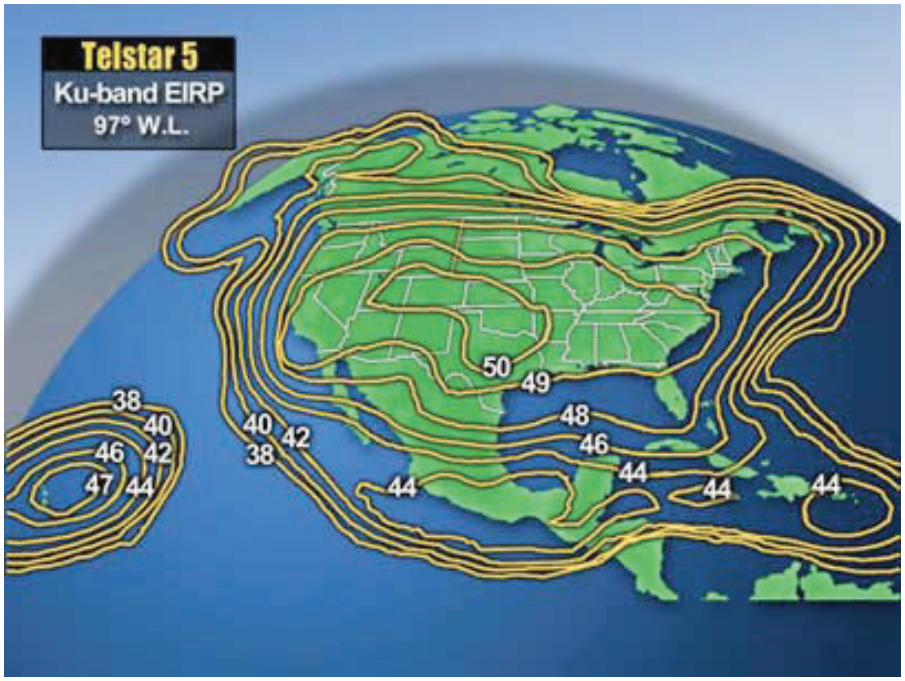


FIGURE 17 An example of a satellite footprint. (Courtesy of Smallear Technologies.)

The most common frequency bands used in satellite communications are C-band and Ku-band. Table 1 provides a list of frequencies commonly used in satellite communications for many different applications such as data, voice, entertainment, news, military, international broadcast, among others. Table 1 does not list all of the satellite frequencies used in the United States but provides the major frequency bands currently in use.

## Orbital Patterns

**Perigee**
closest distance of the orbit to earth

**Apogee**
farthest distance of the orbit from earth

The orbital patterns of satellites are elliptical. For each orbit there is a **perigee** (closest distance of the orbit to earth) and an **apogee** (farthest distance of the orbit from earth). This is shown in Figure 18.

Geostationary orbits use an equatorial orbit. Other possible satellite orbits are *polar* and *inclined orbits.* These orbits are shown in Figure 19. The geostationary satellites use an *equatorial orbit.*

**Table 1** Satellite Frequency Bands

| Band | Uplink (GHz) | Downlink (Ghz) |
|---|---|---|
| L | 1–2 | Various |
| S | 1.7–3 | Various |
| C | 5.9–6.4 | 3.7–4.2 |
| X | 7.9–8.4 | 7.25–7.75 |
| Ku | 14–14.5 | 11.7–12.2 |
| Ka | 27–30 | 17–20 |
| | 30–31 | 20–21 |

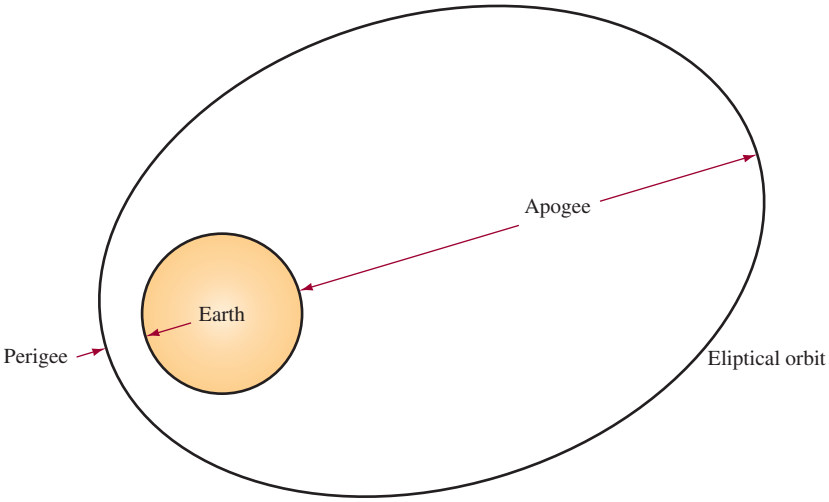


FIGURE 18 The perigee and apogee of a satellite's orbit.

It is interesting to note that three *geostationary orbits,* parked 120° apart, can cover the entire earth surface except for the polar regions above latitudes 76 N and 76 S. This assumes a minimum elevation of 5° for the receiving antennas. A satellite in a *polar orbit* can cover 100 percent of the earth's surface. This is possible because the earth is rotating as the satellite travels around the North Pole and the South Pole. Every location on earth is visible to the satellite twice a day. *Inclined orbits* are used

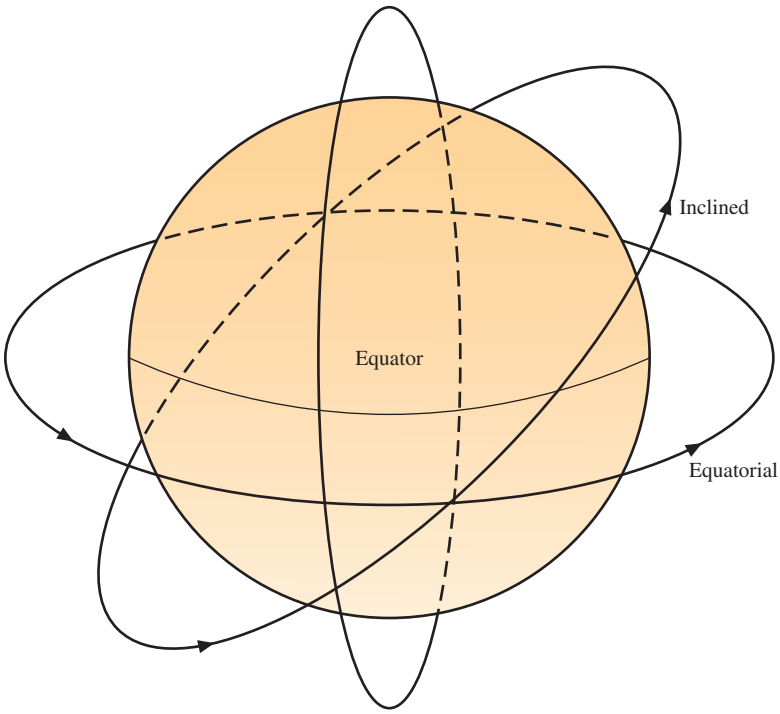


FIGURE 19 Orbital patterns for satellites. (Courtesy of Iridium Satellite LLC.)

to reach the extreme northern and southern latitudes. The problem with inclined orbits is that the receiving station must track the satellite. An example of a highly inclined orbit is the Russian *Molniya,* which has a 63° inclination angle and an orbital period of 12 hours. The apogee region is when the satellite is above the Northern Hemisphere. At this point, the satellite is easiest to track. The satellite is visible to earth stations from 4.5 to 10.5 hours each day.

Satellites in geosynchronous orbit have become numerous. International regulations limit their spacing to prevent interference. This puts the orbital slots over prime real estate, such as North America, Europe, and Japan, at a premium. Another option is to use **low earth orbit (LEO)** satellites. At LEO altitudes (250–1000 miles) signal-time delay shrinks to 5–10 ms, and the launch costs drop considerably from that of the GEO satellites. These satellites are not stationary with respect to a specific point on earth. They orbit the earth with periods of about 90–100 minutes and are visible to an earth station for only 5–20 minutes during each 90–100-minute period. If real-time communication is required, several LEO satellites are necessary. In addition, we must devise some method of handing off subscriber connections between satellites every few minutes as they appear and disappear over the horizon. This requires a high degree of intelligence within the network, much while the subscribers stay relatively still.

**Low Earth Orbit (LEO) Satellites**
low earth satellites with altitudes of 250 to 1,000 miles and signal time delay of 5-10 ms

The Iridium System uses LEO satellites for providing global mobile satellite voice and data communication. The Iridium telephones use frequency division/time division multiplexing (FDMA/TDMA) with a data rate of 2.4 kbps. The Iridium system uses 66 satellites in near polar orbit (inclination angle of 86.4°) at an altitude of 485 miles above the earth. A picture of the Iridium constellation is provided in Figure 20. The satellites orbit the earth once every 100 minutes, 28 seconds. The satellites are arranged so that at least one satellite is available to the user on



FIGURE 20 A picture of the Iridium LEO satellite constellation. (Courtesy of Iridium Satellite LLC.)

earth at all times. At least four satellites are interlinked to each other so that communication with the Iridium ground station gateway is always available. The Iridium system uses L-band frequencies (1616–1626.5 MHz) for telephone and messaging services. The frequency link between satellites uses Ka-band (23.18–23.38 GHz) and uses Ka-band uplink and downlink frequencies to and from the ground station—downlink = 19.4–19.6 GHz; uplink = 29.1–29.3 GHz.

## Azimuth and Elevation Calculations

**Look Angle**
azimuth and elevation angles for the earth station antenna

The *azimuth* and *elevation* angles for the earth station antenna must be calculated so that the correct satellite can be seen. This is called the **look angle.** The azimuth is the horizontal pointing angle of the earth station antenna. The elevation is the angle at which we look up into the sky to see the satellite. To calculate the azimuth and elevation of a ground station antenna requires that the ground station latitude and longitude as well as the longitude of the satellite are known. The latitude and longitude of the earth station can be obtained from U.S. Geological Survey maps or through the use of a Global Positioning Satellite (GPS) receiver. Once the actual location is known, the elevation angle of the earth station antenna can be calculated by using either an online calculator such as the Java Script program available at http://web.nmsu.edu/~jbeasley/Satellite/

Please note, this calculator was developed for an earth station site in the west longitude and north latitude. The equations for calculating the azimuth and elevation look angles are provided in Equations 8 and 9.

$$\tan(E) = \frac{\cos(G)\cos(L) - .1512}{\sqrt{1 - \cos^2(G)\cos^2(L)}} \tag{8}$$

where $E$ = elevation in degrees
$S$ = satellite longitude in degrees
$N$ = site longitude in degrees
$G = S - N$ in degrees
$L$ = site latitude in degrees

Next the azimuth can be calculated using Equation 9.

$$A = 180 + \arctan\left(\frac{\tan(G)}{\sin(L)}\right) \tag{9}$$

where $A$ = azimuth of the antenna in degrees
$S$ = satellite longitude in degrees
$N$ = site longitude in degrees
$L$ = site latitude in degrees
$G = S - N$

Example 2 shows how to use Equations 8 and 9.

**Example 2**

*Calculate the azimuth and elevation angles for an earth station (ground station) antenna given a satellite longitude of 83° west, a site longitude of 90° west, and a site latitude of 35° north.*



A representation of the GPS constellation. (Courtesy U.S. Geological Survey.)

Using Equation 8, the azimuth is equal to

$$A = 180 + \arctan\left(\frac{\tan(-7)}{\sin(35)}\right)$$

$$A = 180 + \arctan\left(\frac{-.128}{.5736}\right)$$

$$A = 168°$$

The elevation angle is calculated using Equation 9

$$\tan(E) = \frac{\cos(-7)\cos(35) - .1512}{\sqrt{1 - \cos^2(-7)\cos^2(35)}}$$

$$\tan(E) = \frac{.661846}{.582199} = 1.1368$$

$$\therefore E = \arctan(1.1368) = 48.663°$$

## Global Positioning Satellite (GPS)

The GPS is another application made possible by satellite technology. It provides pinpoint geographic location information. GPS was originally used by the government and law enforcement agencies, but the availability of low-cost handheld receivers has enabled personal use. You can now obtain your exact location when traveling by car or boat or when hiking. The GPS satellites transmit position data signals, and a GPS receiver processes and computes the time to receive each one. Doing this from four different satellites allows the receiver to determine your exact latitude and longitude.

GPS currently uses a constellation of 28 satellites orbiting above the earth at a distance of 10,900 miles. The GPS satellites complete an orbit about every 12 hours.

The satellites transmit two signals, a course acquisition (C/A) signal transmitted on 1575.42 MHz, which is available for civilian use, and a precision code (P-code), transmitted on 1227.6 MHz and 1575.42 MHz, which are for military use only. GPS receivers measure the time it takes for the satellite signals to travel from the satellites to the receiver; from this information, the receiver can fix our position (i.e., locate where we are). It takes three satellites to fix our position in terms of latitude and longitude, whereas it takes four satellites to determine three-dimensional information: latitude, longitude, and elevation.

Civilian receivers can have a position accuracy of about 2 meters, but this distance can vary. The position accuracy can be improved by using a technique called **differential GPS.** Receiver accuracy is improved by using a ground receiver at a known location to provide corrections to the satellite civilian signal error. With differential GPS, the accuracy of a GPS receiver can be improved to about 1 cm.

**Differential GPS**
a technique in which GPS satellite clocking corrections are transmitted so that the position error can be minimized

## Multiplexing Techniques

A single satellite typically allows simultaneous communications among multiple users. Consider the situation shown in Figure 21. The satellite shown has a footprint (coverage area) as indicated. Some satellites use highly directional antennas so that the footprint may include two specific areas. For example, it may be desirable to utilize a satellite between Hawaii and the West Coast of the United States. In that case, there is no sense in wasting downlink signal power over a large portion of the Pacific Ocean.

In Figure 21, communication among five earth stations is taking place simultaneously. Station A is transmitting to station B on path 1. Station C is transmitting to

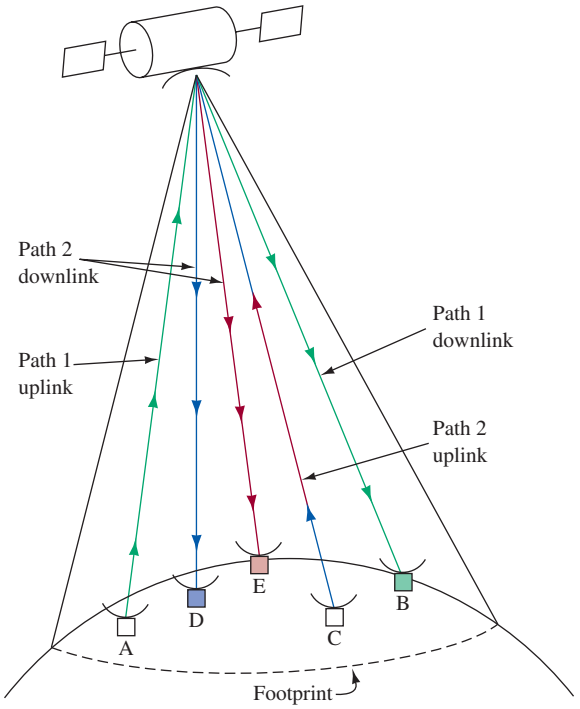


FIGURE 21 Satellite footprint and multiple communications.

stations D and E on path 2. Control signals included with the original transmitted signals are used to allow reception at the appropriate receiver(s).

**Frequency Division Multiple Access**
one channel is being used by multiple receive locations

Two different multiplexing methods are commonly used to allow multiple transmissions with a single satellite. The early satellite systems all used **frequency division multiple access (FDMA).** In these systems, the satellite is a wideband receiver/transmitter that includes several frequency channels, much as how broadcast FM radio contains several channels. An earth station that sends a signal indicating a desire to transmit is sent a control signal telling it on which available frequency to transmit. When the transmission is complete, the channel is released back to the "available" pool. In this fashion, a multiple access capability for the earth stations is proceeded FDMA.

**Time Division Multiple Access**
a single satellite can service multiple earth stations simultaneously on the same frequency on the basis of available bursts of time

Most of the newer SATCOM systems use **time division multiple access (TDMA)** as a means to allow a single satellite to service multiple earth stations simultaneously. In TDMA, all stations use the same carrier frequency, but they transmit one or more traffic bursts in nonoverlapping time frames. This is illustrated in Figure 22, where three earth stations are transmitting simultaneously but never at the same time. The traffic bursts are amplified by the satellite transponder and are retransmitted in a downlink beam that is received by the desired station(s). The computer control of these systems is rather elaborate, as you can well imagine.

TDMA offers the following advantages over FDMA systems:

1. A single carrier for the transponder to operate on is a major advantage. Its traveling wave tube (TWT) power amplifier is much less subject to intermodulation problems and can operate at a higher power output when dealing with a smaller range of frequencies.
2. The use of the time domain rather than the frequency domain to achieve selectivity is advantageous. In FDMA, the earth station must transmit and receive on a multiplicity of frequencies and must provide a large number of frequency-selective up-conversion and down-conversion chains. In TDMA, the selectivity

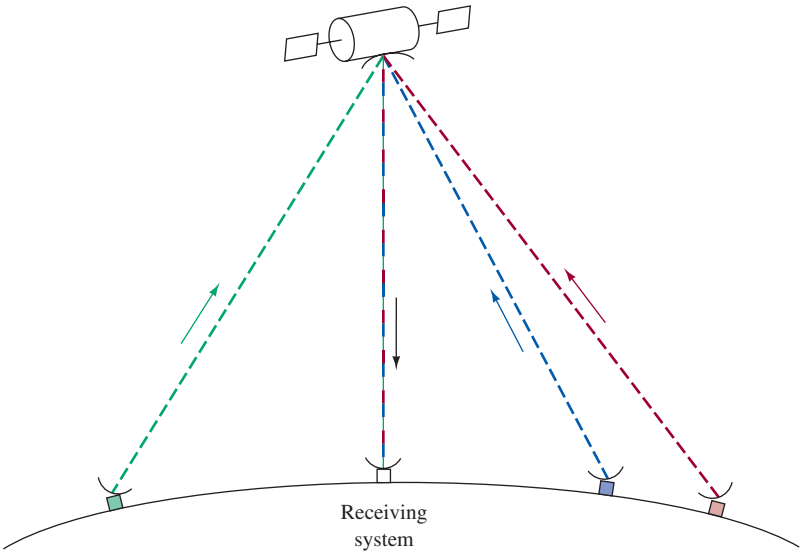


FIGURE 22 TDMA illustration.

is accomplished in time rather than in frequency. This is much simpler and less expensive to accomplish.

3. TDMA is ideally suited to digital communications because they are naturally suited to the storage, rate conversions, and time-domain processing used in TDMA implementation. TDMA is also ideally suited to demand-assigned operation in which the traffic burst durations are adjusted to accommodate demand.

## Earth Station Distance To and From the Satellites

In satellite communications, the distance from an earth station to a satellite is used to estimate the time delay for a transmitted signal to travel from the earth station to the satellite and to return back to earth. The distance to the satellite varies from one earth station site to another. It is common in satellite communications systems to have one channel on a satellite being used by many locations (*multiple access*). The technique used in a system such as this is TDMA. In this type of system, signals from the earth stations must arrive at the satellite at fixed time intervals. If each earth station is the same distance from the satellite, then the task of ensuring that the signals arrive at the satellite is simple. The reality is that earth stations can be separated by thousands of miles and by several degrees in latitude and longitude. Therefore, the distance to the satellite and the time delay for the signal will vary. An explanation of how to calculate the distance from an earth station to any satellite follows.

Table 2 provides necessary information for calculating the distance from a satellite to an earth station. The information is provided in both kilometers and miles.

**Table 2** Earth Satellite Measurements

| Measurement | Kilometers | Miles |
|---|---|---|
| Mean equatorial earth radius | 6,378.155 | 3,963.2116 |
| Distance from a satellite to a subsatellite point | 35,786.045 | 22,236.4727 |
| Distance to geostationary orbit from the center of the earth | 42,164.200 | 26,199.6843 |

Calculating the distance to a satellite requires that the earth station latitude and longitude as well as the satellite's longitude are known. The Java Script program available at http://web.nmsu.edu/~jbeasley/Satellite/ can be used for computing earth station to and from distance as well as the round trip delay. The equation being used in the Java Script program is given in Equation 10.

$$d = \sqrt{D^2 + R^2 - 2DR\cos\alpha\cos\beta} \tag{10}$$

where $d$ = distance to the satellite [meters]
$D = 42.1642 \times 10^6$ meters [distance from the satellite to the center of the earth]
$R = 6.378 \times 10^6$ meters [earth's radius]
$\alpha$ = earth station (site) latitude [in degrees]
$\beta$ = satellite longitude–site longitude [in degrees]

Example 3 provides a look at how to apply Equation 10.

**Example 3**

*Calculate the distance from an uplink at 32° 44′ 36″ N latitude and 106° 16′ 37″ to a satellite parked in geostationary orbit at 99° W longitude.*

*Equation 10 requires that the earth station latitude and longitude be express in degrees rather than in degrees, minutes, and seconds.*

$$\text{N LATITUDE } 32°\ 4'4\ 36''$$

$$\text{converted to degrees} = 32 + \frac{44}{60} + \frac{36}{3600} = 32.74333°$$

$$\text{W LONGITUDE } 106°\ 1'6\ 37''$$

$$\text{converted to degrees} = 106 + \frac{16}{60} + \frac{37}{3600} = 106.2769448°$$

Next, insert the data into Equation 10 and solve for the distance from the earth station to the satellite.

$$d = \sqrt{D^2 + R^2 - 2DR\cos\alpha\cos\beta}$$

align where $d$ = distance to the satellite [meters]
$D = 42.1642 \times 10^6$ meters [distance from the satellite to the center of the earth]
$R = 6.378 \times 10^6$ meters [earth's radius]
$\alpha = 32.74333°$
$\beta = 99°\ \text{W} - 106.27694 = -7.27694$

Therefore

$$d = \sqrt{(42.1642 \times 10^6)^2 + (6.378 \times 10^6)^2 - (2)(42.1642 \times 10^6)(6.378 \times 10^6)\cos(32.74333)\cos(-7.27694)}$$

$$d = 37{,}010 \times 10^6 \text{ meters}$$

The time required for the signal to travel from the earth station given in Example 3 to the satellite parked at 99° W can be calculated by dividing the distance ($d$) by the velocity of light ($c$) of $2.997925 \times 10^5$ km/s. The equation is written as follows:

$$\text{delay} = \frac{d}{c} = \frac{\text{distance}}{\text{velocity of light}} = \frac{d}{2.997925 \times 10^5}\ \text{km/s} \cong \frac{d}{3 \times 10^5}\ \text{km/s}$$

$$\text{The roundtrip delay} = \frac{2d}{c} \qquad \textbf{(11)}$$

Using Equation 11, the time delay for the signal to travel the distance to the satellite and the round trip delay will equal to

$$\text{delay} = \frac{d}{c} = \frac{37010.269\ \text{km}}{2.997925 \times 10^5\ \text{km/s}} = 0.123\ \text{seconds}$$

$$\text{the roundtrip delay} = \frac{2d}{c} = (2)\,(.123) = .2469\ \text{seconds}$$

**Code Division Multiple Access (CDMA)**
each station uses a different binary sequence to modulate the carrier

It should be mentioned that a third multiplexing technique is being used. **Code division multiple access (CDMA)** also allows the use of just one carrier. In

it, each station uses a different binary sequence to modulate the carrier. The control computer uses a "correlator" that can separate and "distribute" the various signals to the appropriate downlink station.

## VSAT and MSAT Systems

Two other important areas of satellite communications are (1) very small aperture terminal (VSAT) fixed satellite communication systems and (2) ultrasmall aperture terminal mobile satellite (MSAT) systems. Technological advances and market demand have driven the development of these new markets. MSAT terminals, which can be called "VSATs on wheels," have several features in common with VSATs. An application of a MSAT system includes large national trucking firms that use MSAT technology to maintain continuous communication with each of its trucks. Whereas VSATs take telecommunication services directly to fixed users, MSAT terminals take them to moving vehicles.

Conventional VSAT systems allow multiple inexpensive stations to be linked to a large, central installation. For example, Walmart installed small aperture antenna systems (VSATs) at each of its stores and linked them with its central main frame computer in Arkansas. This arrangement allows Walmart to quickly convey data, such as what customers are buying and how much inventory is on hand. They can both supply each store with the items its customers are buying and speed up the



An example of a VSAT antenna from Andrew Corporation. (Photo courtesy of Andrew Corporation. All rights reserved.)

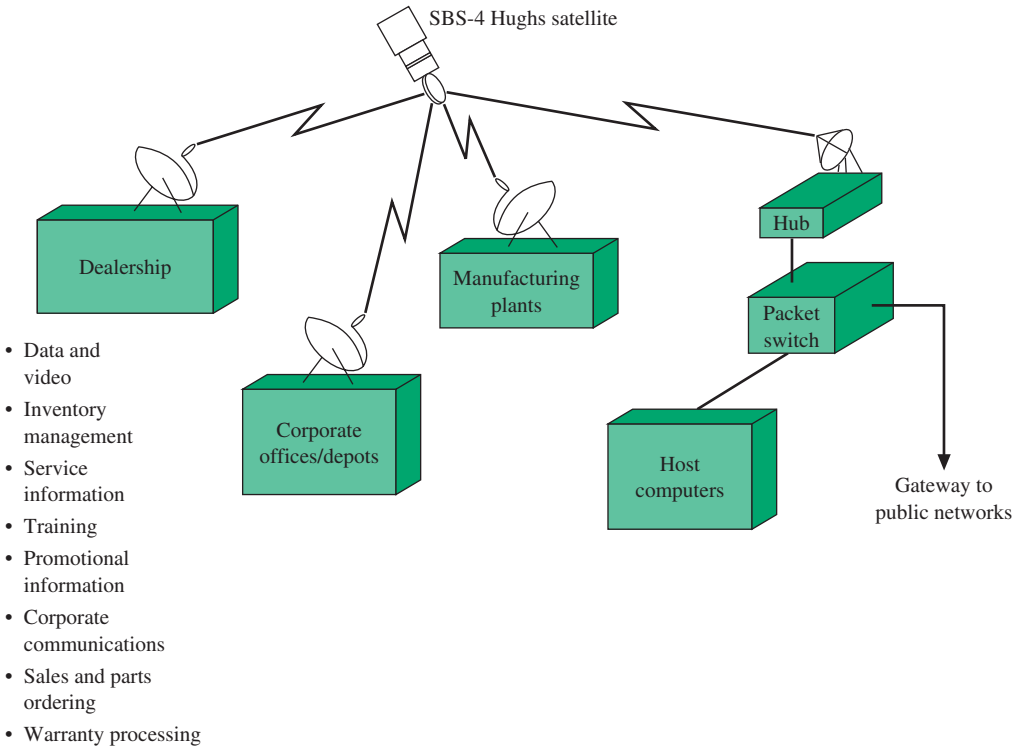


FIGURE 23 VSAT network.

checkout process. The VSAT dish antenna is typically 0.5–1.2 meters in diameter, and a transmitter power of just 2–3 Watts is sufficient.

VSAT-based systems are also available for home Internet services. WildBlue offers high-speed (1.5 Mbps-download, 256 kbps-upload) Internet access. WildBlue uses a Ka-band communication link that connects to the Telesat's Anik F2 satellite parked at 111.1° W longitude. The satellite uplink frequency is 29.5–30.0 GHz, and the downlink frequency is 19.7–20.2 GHz. The WildBlue minidish is an elliptical reflector measuring 25.6″ high and 29.1″ wide.

Figure 23 provides a pictorial representation of Chrysler's VSAT network. It connects the automaker's headquarters with more than 6,000 dealerships and corporate facilities in North America. It is used to assist mechanics with repair and allows salespeople to order and confirm delivery dates for cars from a showroom computer. It also helps maintain proper inventories of automobiles and spare parts. Satellite systems have the advantage of simultaneous delivery of information to and from multiple sites through the use of TDMA techniques. The transmit power requirements are minimal, and all sites can share access.

## Satellite Radio

The FCC allocated RF spectrum in the S-band (2.3 GHz) for the Digital Audio Radio Service (DARS) in 1992. Currently, there are three satellite radio services: XM Satellite Radio, Sirius Satellite Radio, and WorldSpace. WorldSpace began




The XM Satellite Radio. (Courtesy of XM Satellite Radio, Inc.)

satellite radio transmission in 1998, XM began in 2001, and Sirius began in 2002. The satellites used by these radio services orbit in geostationary or inclined orbital patterns. Both patterns were shown in Figure 19.

The XM Satellite Radio service uses two geostationary satellites. These satellites are parked approximately 22,300 miles above the earth at a fixed location. The difference in the distance of the apogee and the perigee for geostationary satellites is minimal. The Sirius Satellite Radio service uses three satellites in an inclined orbit. Each satellite is above the continental United States at least 16 hours each day. The orbits of the satellites are arranged so that at least one satellite is always over the United Sates. The apogee for the Sirius satellites is 29,200 miles above the earth, and, at this point, the satellites are over North America. The perigee for the Sirius satellites is 14,900 miles. WorldSpace provides satellite radio service for areas outside of the United States and currently has three satellites parked in geostationary orbit. These satellites transmit satellite radio over the L-band spectrum (1467–1492) MHz.

Reception of satellite radio services requires an antenna and custom chip sets to process the received signal. Reception of the Sirius Satellite Radio signal is made possible using diversity receivers (in addition to the special chip sets) and antennas. Receiver diversity is the reception of two signals from two satellites at any given time and the selection of the best one. This process is called *spatial diversity.* The Sirius satellites transmit the radio signal on three different frequencies in the 12.5 MHz band. Once again, the best received signal is selected. The Sirius system also uses time diversity, which is provided by delaying the audio by about 4 seconds. This delay is accomplished by storing the satellite's digital data stream so that a momentary loss of signal does not interrupt the audio feed.



# 7 Figure of Merit and Satellite Link Budget Analysis

Most satellite equipment providers, such as satellite television service providers, will provide the minimum equipment the end user needs, based on the users geographic location and the satellite services required. In the case in which prepackaged equipment is not provided, there are two important equations that should always be examined when specifying a satellite earth station system. These equations are as follows:

1. Figure of merit (G/T)
2. Satellite link budget (C/N)

**Figure of Merit**
a way to compare different earth station receivers

**Satellite Link Budget**
used to verify the required C/N and signal level to the satellite receiver will be met

This section presents the equations for calculating the **figure of merit** (G/T) and the **satellite link budget.** *Note:* An online satellite system calculator has been developed specifically for this textbook that uses the satellite calculations presented in the text. The URL for the online calculator is http://web.nmsu.edu/~jbeasley/Satellite/

Not all satellite systems or configurations are equivalent. There may be a large antenna (reflector) but a poor amplifier on the front end. Another system could have a smaller antenna (reflector) but an excellent amplifier on the front end. Which is better? The figure of merit is a way to compare different earth station receivers. The figure of merit takes into consideration the technical quality of each piece of the satellite earth station equipment and enables the end user to obtain some measure of performance for the entire system. The final figure of merit can then be used as a comparison to other earth stations.

In regards to the satellite link budget, satellite receivers will have a required carrier-to-noise (C/N) at the input. The satellite link budget is used to verify that the required C/N and signal level to the satellite receiver will be met to ensure the satellite receiver outputs a signal that meets specifications. A receive-signal level that does not meet required C/N specifications can result in excessive bit error rates (BER) for digital satellite receivers and an extremely noisy signal for analog receivers.

## Figure of Merit

The figure of merit is used to provide a performance measure for different satellite earth stations. Orbiting satellites also have a figure of merit (G/T), and this value is available from the satellite service provider. The larger the figure of merit (G/T), the better the earth station system. The equation defining figure of merit is provided in Equation 12.

$$\text{G/T} = G - 10\log(T\text{s}) \tag{12}$$

where G/T = figure of merit (dB)
$G$ = antenna gain (dBi)
$T$s = sum of all $T_{eq}$ (noise figure measurements)

There are three critical components that significantly contribute to the (noise figure-$T_{eq}$) that should always be examined when selecting an earth station. These are

- The antenna
- LNA, LNB (LNC)
  LNA (low-noise amplifier)

LNB (low-noise block-converter)
LNC (low-noise converter)

- Receiver and passive components

The equivalent noise temperature for a satellite antenna can be obtained from the manufacturer. Typical noise temperatures for satellite antennas can be approximately 30K (Kelvin) or less. It is important to observe that the first amplifier stage in the earth station, an LNA, an LNB, or an LNC dominate the sum of $T_{eq}$, noise figure measurements. LNAs, LNBs, and LNCs are sold according to the noise temperature specification, and, typically, the lower the noise temperature, the more expensive the device.

An example of the need for a critical first stage amplifier is the selection of an LNA (low-noise amplifier) for a satellite receiver. The received voltage, obtained from a received satellite signal, is very small ($\mu$V) and a high-gain amplifier is required to use the signal. Therefore, it can be stated that for electronic systems amplifying small received signal voltage level, the first stage needs to exhibit low-noise characteristics (small NF) and have a high gain (G). The third contribution to the sum of noise figures is from the receiver's passive components, but these noise figure contributions are typically very small and are demonstrated in Example 4.

Low-noise amplifiers are typically specified by their equivalent noise temperature rating $T_e$. The relationship for $T_e$ and the noise figure, *NF* and noise factor, *F* are shown in Equations 13 and 14.

$$T_{eq} = T_o(F - 1) \tag{13}$$

where $T_o = 290°K$ (room temperature)

$$\text{NF(dB)} = 10 \log F = 10 \log\left(\frac{T_{eq}}{T_o} + 1\right) \tag{14}$$

where

$$F = \frac{T_{eq}}{T_o} + 1$$

An example of calculating the figure of merit (G/T) for a satellite receiver is provided in Example 4, and calculating the free space path loss in Example 5.

## Example 4

*Determine the figure of merit (G/T) for a satellite earth station with the following parameters. Compare the figure of merit for this earth station with another earth station that has a 22.5-dB G/T rating.*

Antenna gain = 45 dBi
Antenna noise temperature = 25K
LNB noise temperature = 70K
Noise temperature (receiver and passive components) = 2K

First calculate the sum of all of the noise temperature contributions.

$$T\text{s} = (25 + 70 + 2)\text{K} = 97\text{K}$$

Use Equation 12 to calculate the figure of merit (G/T)

$$\begin{aligned} \text{G/T} &= G - 10\log(Ts) \\ &= 45 - 10\log(97) \\ &= 45 - 10 \times 1.97 \\ \text{G/T} &= 25.13 \text{ dB} \end{aligned} \tag{12}$$

Earth Station Comparison

The figure of merit for this earth station (25.3 dB) is superior to the earth station with the 22.5 dB G/T rating.

## Satellite Link Budget Calculation

The next important equation that should always be examined when specifying a satellite earth station calculates the satellite link budget. The satellite link budget is used to evaluate the quality of a satellite link signal in terms of the C/N and to make sure the satellite link will meet required C/N specifications. Satellite receivers will have some minimum C/N specification or a minimum input receive signal level. This minimum specification must be met for the satellite receiver to meet the maximum allowed BER or signal-to-noise specification. The total satellite link budget will be determined from both the *uplink budget* and the *downlink budget.*

**Free-Space Path Loss**
the attenuation of the RF signal as it propagates through space.

An important parameter to evaluate for a satellite link is the **free-space path loss.** This is the attenuation of the RF signal as it propagates through space and the earth's atmosphere to and from the satellite. There will be an uplink path loss (earth station-to-satellite) and a downlink path loss (satellite-to-earth station). The free-space path loss will be the biggest loss value (in dB) listed in a satellite link budget, with typical values ranging from 180 dB to 220 dB that depend on frequency and geographic location. The longer the distance the satellite signal has to travel, the greater the attenuation. It is also important to note that the free-space path loss is a function of the wavelength of the transmit frequency. This means that the smaller the wavelength (i.e., the higher the frequency), the greater the path loss. Free-space path loss can be calculated using Equation 15.

$$\therefore L_p(\text{dB}) = 20\log\left(\frac{4\pi d}{\lambda}\right) \tag{15}$$

where $L_p$ = free space path loss [Watts/Watt]
$d$ = distance [meters]
$\lambda$ = wavelength [meters]

**Example 5**

*Calculate the free-space path loss from an earth station uplink to a satellite if the distance is 41.130383 × $10^6$ meters and the uplink frequency is 14.25 GHz.*
*(a) Use Equation 15 to calculate the free-space path in dB.*

The wavelength is calculated by

$$\lambda = \frac{c}{f} = \frac{2.997925 \times 10^8 \text{ m/s}}{14.25 \times 10^9 \text{ m}} = .210381 \text{ m}$$

The free-space path loss (Lp) expressed in dB is

$$L_p(\text{dB}) = 20 \log\left(\frac{4\pi d}{\lambda}\right) = 20 \log\left(\frac{4\pi 41.130383 \times 10^6}{.0210381}\right) = 207.807 \text{ dB}$$

The Java Script program available at http://web.nmsu.edu/~jbeasley/Satellite/ can be used to compute the free-space path loss.

Now that all of the information is available regarding the gains and losses for the earth station and the satellite link, a link budget can be prepared. The uplink and downlink budgets are determined by summing the gains and losses for the link. The satellite uplink budget will take into consideration the following:

**Uplink**

| Gains | Losses |
|---|---|
| Uplink power (EIRP) | Free-space path loss of the signal strength as it travels from the earth station to the satellite |
| Satellite G/T | Atmospheric losses and possibly the pointing error of the earth station |
| Boltzmann's constant adjustment<br>*Note:* This value equals 228.6 dBW/kHz, which is obtained by taking $10 \log(1.38 \times 10^{-23})$ | Bandwidth |

**Downlink**

| Gains | Losses |
|---|---|
| Satellite downlink power obtained from the satellite footprint | Free-space path loss of the signal strength as it travels from the satellite to the earth station |
| Earth station G/T | Atmospheric losses and possibly the pointing error of the earth station |
| Boltzmann's constant adjustment<br>*Note:* This value equals 228.6 dBW/kHz, which is obtained by taking $10 \log(1.38 \times 10^{-23})$ | Bandwidth |

*Note:* Commercially available satellite link budget calculators will include many more parameters in the link budget, but this example provides a good estimate of the expected C/N at the satellite and the earth station.

The equation used in the Java Script program for calculating the uplink C/N (dB), and downlink C/N (dB) are provided in Equations 16 and 17.

Uplink budget

$$\text{C/N} = 10 \log A_t P_r - 20 \log\left(\frac{4\pi d}{\lambda}\right) + 10 \log \frac{G}{T_e} - 10 \log L_a - 10 \log K - 10 \log BW + 2286 \text{ dBW/kHz} \quad \textbf{(16)}$$

where $A_t$ = earth station transmit antenna gain [absolute]
$P_r$ = earth station transmit power [watts]
$d$ = distance to the satellite from the earth station (meters)
$\lambda$ = wavelength of the transmitted signal (meters/cycle)
$G/T_e$ = satellite figure of merit
$L_a$ = atmospheric losses
$BW$ = bandwidth

Downlink budget

$$C/N = 10 \log A_t P_r - 20 \log\left(\frac{4\pi d}{\lambda}\right) - 10 \log \frac{G}{T_e} - 10 \log L_a + 228.6 \text{ dbW/kHz} \quad (17)$$

where $A_t$ = satellite transmit antenna gain [absolute]
$P_r$ = satellite transmit power [*watts*]
$d$ = distance to the earth station from the satellite (meters)
$\lambda$ = wavelength of the transmitted signal (meters/cycle)
$G/T_e$ = earth station figure of merit
$L_a$ = atmospheric losses

It was previously mentioned that satellite receivers will have a required C/N and/or a minimum signal level at the receiver input to meet the system requirements. The link budget calculation is used to verify that the minimum requirements will be met for the uplink (earth station to satellite) and for the downlink (satellite to earth station). In the case in which the required C/N is not met, the equipment specified may need to modified. On the uplink side, this can require a larger antenna or an increased transmit power. On the downlink side, this can require a larger antenna or better LNA, LNB, or LNC. An example of using the Java Script program to calculate the satellite link budget is provided in Example 6.

## Example 6

*Use the online program at http://web.nmsu.edu/~jbeasley/Satellite/ to calculate the link budget for an earth station located at 32° 18′ N latitude and 106°46′ W longitude that will be linked to a satellite parked at 99° W longitude. A data rate of 10 Mbps using 8-PSK modulation is being used, which requires a bandwidth of 3.33 MHz–(65.22 dB). You are given the following information for the earth station and satellite. The required C/N at the satellite is 6 dB, and the required C/N at the earth station is 12 dB. Comment on the results obtained from the satellite link budget in regard to whether the received C/N is or is not acceptable.*

**Earth Station**

| | |
|---|---|
| Uplink frequency | 14.274 GHz |
| Antenna Diameter | 4.5 meters |
| Antenna Efficiency | 0.6 |

| | |
|---|---|
| Earth Station G/T | 30.6 dBK |
| Transmit Power | 3 W |
| **Satellite** | |
| Downlink Frequency | 11.974 GHz |
| Satellite EIRP | 40.1 dBW |
| Satellite G/T | 0.9 dBK |
| **Uplink—Solution** | |
| EIRP | +59.11 dBW |
| Path Loss | −205.89 dB |
| Satellite G/T | +0.9 dBK |
| Bandwidth | −65.22 dB |
| Boltzmann's Constant | +226.6 dBW/kHz |
| Uplink C/N | 16.59 dB |
| **Downlink—Solution** | |
| EIRP | +40.1 dBW |
| Path Loss | −206.3 dB |
| Earth Station G/T | +30.6 dBK |
| Bandwidth | −65.22 dB |
| Boltmann's Constant | +226.6 dBW/kHz |
| Downlink C/N | 25.76 dB |

The calculated values for the uplink and the downlink C/N are both well within specified guidelines. There is sufficient margin for both the uplink and the downlink to allow for additional atmospheric losses and equipment degradation.



## 8 Troubleshooting

A radio communications system transmits a radio frequency signal and depends on a significant amount of that signal being intercepted at the receiver. In earlier chapters, you learned about noise and interference that could affect the transmitted signal. Now we will take a closer look at the problems interference causes in TV and FM radio systems because we all can identify with these. We will also discuss some methods used to resolve interference problems.

After completing this section you should be able to

- Identify different types of interference
- Describe three methods to reduce interference
- Troubleshoot various antenna installation problems

### Radio Interference

This discussion will be limited to TV and FM reception because we are most familiar with both. Sources of unwanted signals (noise and interference) happen naturally or are human-made. Good circuit and antenna design reduces noise to negligible levels. Human-made sources generate most of the interference that usually disturbs the

quality of the signal at the receiver site. There are various solutions to remedy interference problems at the receiver. The first step in eliminating an unwanted signal is to pinpoint the source of it. After finding the source of the interference that is causing the disturbance, remove it if possible. When it is not possible to remove the interference source, try increasing the distance of the undesirable source from the receiver. This usually reduces the effects of interference on the receiver and may clear the problem. Using filters is another practical approach for removing unwanted signals. One more method is to protect the receiver by shielding the antenna, the ac input power line, or the whole receiver from the interference signal. The following paragraphs talk about the kinds of interference you may encounter and practical methods to resolve the problems.

***Capture and Cochannel Interference Effects*** In areas of congested radio, TV, and communications channels, receivers are subject to the capture effect and cochannel interference. The capture effect causes a stronger station to overpower and replace a weaker station at the receiver. The weak station is usually lost completely. Cochannel interference takes the form of two or more broadcasting stations bleeding into each other at the receiver. To the listener, this bleeding-over effect turns into bothersome noise. The best solution for these kinds of interference is to rotate the antenna or obtain a more directional antenna.

***EMI and RFI*** Section 2 introduced EMI and RFI. Electromagnetic interference (EMI) shows up on TV as vertical bands of dots moving on the screen. On FM, EMI causes distortion to the audio. Radio frequency interference (RFI) displays itself as several bars or wavy lines on the TV screen. Strong RFI will cause complete loss of the TV's picture. FM audio is affected by RFI with garbled sound, often causing it to be pure gibberish.

The automobile ignition or spark plugs and kitchen appliances like the blender or microwave oven are sources of EMI. In addition, computers and electric motors produce EMI. EMI can enter the receiver through the antenna, lead-in wire, or power line. To decide which is bringing in the EMI, disconnect the lead-in antenna wire to the receiver and short the receiver antenna terminals together. If the interference disappears, then the source was the antenna or lead-in wire. If the interference continues, then the unwanted EMI is coming through the power line. When it is not possible to remove the EMI source or relocate it, use shielding or filtering to remove the interference. When the interference is entering the receiver by way of the antenna, it may be necessary to relocate the antenna.

Ham radio and CB radio transmitters are a common cause of RFI. If the source can be found (towering antennas in the neighborhood are usually a dead giveaway), attempt to contact the owner and let them know the problem exists. Install a high-pass filter between the antenna and receiver input on the lead-in wire to eliminate RFI. However, the best way to eliminate the interference is to remove the source.

***Fading*** Fading is one of the most troublesome hindrances in communications. Fading is the result of the signal arriving at the receiver from two different paths—a direct path and the skyway path. A typical example of this type of problem occurs when an airplane flies over an area where outside TV antennas are used. The airplane causes reflected signals to mix with the direct signal, and a fluttering results in the

picture on the TV receiver. Using a high-gain directional antenna will often resolve this kind of interference.

***Reflections*** Figure 6 shows a problem that exists between any type of broadcast station and its receiver. In practice, the reflected wave is quite strong, almost as strong as the direct wave, but the path taken by the reflected wave is longer than that of the direct wave. The important fact to remember is that even though the wavelength may be only 1 m and the path is several miles, every time the path difference is equivalent to $\frac{1}{2}$ wavelength or 180°, there will be a null in the signal. Conversely, when the path difference is a multiple of wavelengths, the signals add, potentially doubling the signal strength. Equation (18) will enable you to determine where a peak in signal strength might be found.

$$\theta = \frac{1.385 \times 10^{-4} \times H_t \times H_r \times f}{D} \tag{18}$$

Remember, every time $\theta$ is an odd multiple of 180°, you are in a null. $H_t$ is the transmitter height in feet, $H_r$ is the receiver height in feet, $D$ is the distance in miles, and $f$ is the frequency in MHz.

The point is, when you need more signal, move the antenna. Intuition would tell you to increase the height, but you may actually be able to lower the antenna and find more signal.

*Diffraction:* Diffraction is much more complicated than reflection, but the solution is the same. As you move away from the mountain shown in Figure 5 you will find hot spots. The technician who finds the hot spot can save a great deal of money on an antenna installation.

*Ghosting in TV Reception:* It may be possible to fight the ghost problem described in Figure 8 with knowledge of your antenna patterns. Most TV antennas have a fairly broad main beam and several null and side lobes (see Figure 24).

Try orienting the antenna to place the ghost signal in a null and the desired signal somewhere on the main beam. If this isn't possible, try a single-frequency antenna. Single-frequency antennas have a high rejection of side lobes.

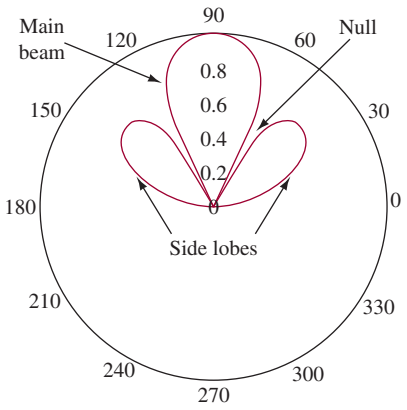


FIGURE 24 Antenna pattern.

## Sky-Wave Propagation

Commercial use of the shortwave frequencies is steadily declining, but it is still the cheapest way to communicate with remote areas of the world. The technician or engineer needs some knowledge of system planning. People interested in short-wave propagation or forecasting should obtain a copy of a computer program called "Ioncap." It was developed by the National Bureau of Standards, now called National Institute of Standards and Technology, and can be purchased from the U.S. Government Printing Office. Several commercial programs are available that use Ioncap as a basis and are easier to use.

## Satellite Communications

When servicing or installing a satellite system, your chief problem is aligning the antenna with the satellite. Beams are no more than $2^{\circ}$ wide and polarity might be unknown. All are usually adjustable and often need adjustment when performance is not satisfactory.



## 9 Troubleshooting with Electronics Workbench™ Multisim

In this exercise, we investigate the simulation of crystals and crystal oscillators using Electronics Workbench™ Multisim. Crystals are used when greater frequency stability is required than that provided by LC oscillators. This chapter focused primarily on the concepts of radio-wave propagation and the effects propagation has on the different frequencies. This is a good opportunity to explore the components used to generate these different frequencies.

The first exercise investigates the property of a crystal. A crystal can be modeled as a series *RLC* resonant circuit with a very high Q. Open the file **Fig13-25** at www.pearsoned.com/electronics. This circuit contains a crystal connected to the Bode plotter, a signal source, and 1-k Ω termination. The circuit is shown in Figure 25.

At the series resonant point, the crystal should have a very low resistance, whereas at other frequencies, the crystal impedance should be quite high. Based on this information, the Bode plotter provided by Multisim can be used to provide a frequency sweep of the crystal using the test circuit provided. At resonance, we should see a change or disturbance in the output response. The frequency of the crystal is not listed on the circuit, so make sure the range for the Bode plotter has been set to sweep a wide frequency range. For this example, the initial (*I*) frequency is 1 kHz and the final (*F*) frequency is 2 GHz.

Start the simulation and view the frequency-sweep results by double-clicking on the Bode plotter instrument. You should see an image similar to that shown in Figure 26. Move the cursor so that you can measure the frequency of the disturbance in the frequency sweep. You will find that the disturbance in the frequency sweep is at about 15 MHz. Double-click on the crystal. You should see that the crystal's frequency value is 15 MHz. Click on **Edit Model** to view how the crystal is being modeled by Multisim. The crystal is modeled by a series *LCR* circuit that is defined by the circuit nodes and the component values consisting of LS 1 3 0.005,

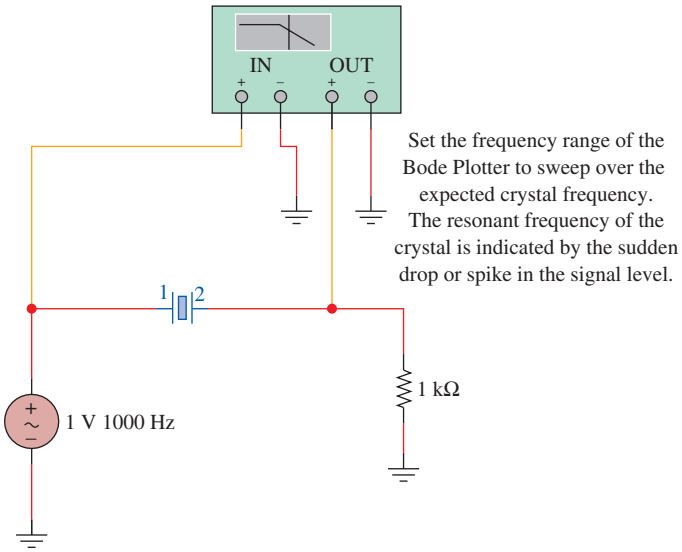


FIGURE 25 The test circuit for the crystal oscillator using EWB Multisim.

CS 3 4 2.2e-014, and RS 4 2 10, and a parallel capacitance CO 1 2 5e-012. You can use these values to verify that the resonant frequency of the model is 15 MHz.

Next, open the file **FigE13-1** at www.pearsoned.com/electronics. This circuit is an example of a Pierce crystal oscillator. The crystal frequency is 32.768 kHz, which is a common clock frequency used in digital clocks and watches. This frequency, 32.768 kHz, is equal to $2^{15}$, and this value is easily divided by down to 1 pulse per second using digital logic circuits. Start the simulation and check the output signal. You should see a wave with a period of about 30.5 $\mu$S, which is the period of a 32.768-kHz signal. The RFC (RF choke) is placed in series with the connection to the power supply to minimize the coupling of oscillator noise to the power supply.

## Electronics Workbench™ Exercises

1. Open the file **FigE13-2** at www.pearsoned.com/electronics. Use the technique described in the text to determine the frequency of the crystal. Verify your answer by double-clicking on the crystal and viewing the values.

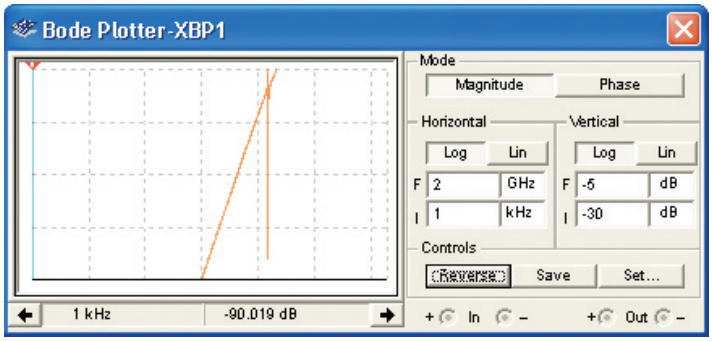


FIGURE 26 The frequency sweep of a crystal under test.

2. Open the file **FigE13-3** at www.pearsoned.com/electronics. Determine if the Pierce crystal oscillator is working properly. Correct any faults and retest the circuit. Report on your findings.
3. Open the file **FigE13-4** at www.pearsoned.com/electronics. Determine if the Pierce crystal oscillator is working properly. Correct any faults and retest the circuit. Report on your findings.



## Summary

In this chapter we studied various considerations of wave propagation. We discovered that electrical energy can be converted to wave energy with many properties in common with light wave propagation. The major topics you should now understand include:

- the definition of an electromagnetic wave, isotropic point source, wavefront, and characteristic impedance of free space
- the understanding of environmental effects on wave propagation, including reflection, refraction, and diffraction
- the explanation of ground- and space-wave propagation
- the description of ionospheric layers and their effects on sky-wave propagation
- the definitions of skipping, critical frequency, critical angle, maximum usable frequency (MUF), skip zone, fading, and tropospheric scatter
- the description and use of satellite communications
- the explanations of multiplexing techniques used in satellite communications, including FDMA, TDMA, and CDMA
- the description of very small aperture terminal (VSAT) and ultrasmall aperture terminal mobile satellite (MSAT) communication
- the power-loss calculations used in satellite communications analysis



## Questions and Problems

### Section 1

1. Explain why an antenna can be thought of as a transducer.
2. List the similarities and dissimilarities between light waves and radio waves.

### Section 2

3. What are the two components of an electromagnetic wave? How are they created? Explain the two possible things that can happen to the energy in an electromagnetic wave near a conductor.

*4. What is *horizontal and vertical polarization* of a radio wave?

*5. What kinds of fields emanate from a transmitting antenna, and what relationships do they have to each other?

6. Define *wavefront.*

* An asterisk preceding a number indicates a question that has been provided by the FCC as a study aid for licensing examinations.

7. Calculate the power density in watts per square meter (on earth) from a 10-W satellite source that is 22,000 mi from earth. ($6.35 \times 10^{-16}$ W/m$^2$)
8. Calculate the power received from a 20-W transmitter, 22,000 mi from earth, if the receiving antenna has an effective area of 1600 mi$^2$. ($2.03 \times 10^{-12}$ W)
9. Calculate the electric field intensity, in volts per meter, 20 km from a 1-kW source. How many decibels down will that field intensity be if the distance is an additional 30 km from the source? (8.66 mV/m, 7.96 dB)
10. Calculate the characteristic impedance of free space using two different methods.
*11. How does the field strength of a standard broadcast station vary with distance from the antenna?
12. Define *permeability.*

## Section 3

13. In detail, explain the process of reflection for an electromagnetic wave.
14. With the aid of Snell's law, fully explain the process of refraction for an electromagnetic wave.
15. What is *diffraction* of electromagnetic waves? Explain the significance of the shadow zone and how it is created.
16. Write the equation for the coefficient of reflection. ($\rho = \epsilon_r/\epsilon_i$)
17. Define *refraction.*
18. Define *shadow zone.*

## Section 4

19. List the three basic modes whereby an electromagnetic wave propagates from a transmitting to a receiving antenna.
20. Describe ground-wave propagation in detail.
21. Explain why ground-wave propagation is more effective over seawater than desert terrain.
*22. What is the relationship between operating frequency and ground-wave coverage?
*23. What are the lowest frequencies useful in radio communications?
24. Fully explain space-wave propagation. Explain the difference between a direct and reflected wave.
25. Explain the phenomenon of *ghosting* in TV reception. What would be the effect if this occurred with a voice transmission?
26. Calculate the ghost width for a 17-in.-wide TV screen when a reflected wave results from an object $\frac{3}{8}$ mi "behind" a receiver. How could this effect be minimized? (1.28 in.)

## Section 5

27. List the course of events in the process of sky-wave propagation.
28. Provide a detailed discussion of the ionosphere—its makeup, its layers, its variations, and its effect on radio waves.
*29. What effects do sunspots and the aurora borealis have on radio communications?
30. Define and describe *critical frequency, critical angle,* and *maximum usable frequency* (MUF). Explain their importance to sky-wave communications.
31. What is the optimum working frequency, and what is its relationship to the MUF?
32. What frequencies have substantially straight-line propagation characteristics analogous to those of light waves and are unaffected by the ionosphere?



33. What radio frequencies are useful for long-distance communications requiring continuous operation?
34. In radio transmissions, what bearings do the angle of radiation, density of the ionosphere, and frequency of emission have on the length of the skip zone?
35. Why is it possible for a sky wave to "meet" a ground wave 180° out of phase?
36. What is the process of tropospheric scatter? Explain under what conditions it might be used.
*37. What is the purpose of a diversity antenna receiving system?
38. List and explain three types of diversity reception schemes.
39. What is skipping?
40. Define *fading.*
41. What happens when a signal is above the critical frequency?

## Section 6

42. What is *satellite communications*? List reasons for their increasing popularity.
43. Explain the differences between GEO and LEO satellite systems. Describe the advantages and disadvantages of each system.
44. Describe a typical VSAT installation. How does it differ from an MSAT system?
45. Explain the methods of multiplexing in SATCOM systems, and provide the advantages of TDMA over FDMA.
46. Use the satellite footprint of the Telstar 5 provided in Figure 17 to determine the expected EIRP for the signal in your area.
47. An earth station is located at 98° W longitude and 35.1° N latitude. Determine the azimuth and elevation angles for the earth station if the antenna is to be pointed at a satellite parked at 92° W longitude.
48. What two signals does a GPS satellite transmit? How are they used, and what frequencies are being used?
49. What is the distance to a satellite parked at 69° W longitude from an earth station located at 29° N latitude and 110° 36′ 20″ W longitude? Calculate the round-trip time delay for a signal traveling from the earth station to the satellite and back.
50. Define *apogee* and *perigee.*
51. What is the altitude and orbital period of the Iridium LEO satellites? How many satellites are there, and what type of orbital pattern is used?

## Section 7

52. Calculate the noise factor (NF) in dB for a 100° LNA.
53. Determine the figure of merit for a satellite earth station with the following specifications:
    Antenna Gain—48 dBi
    Reflector noise temperature—28 K
    LNA noise temp—55 K
    Noise temp. (various components)—3 K
54. Calculate the free-space path loss for a link between a satellite parked at 89° W longitude and an earth station at 29° N latitude and 110 36′ 20″ W longitude. The downlink frequency is 11.974 GHz.
55. Prepare a satellite link budget for an earth station located at 35° 10′ N latitude and 99° 15′ W longitude that will be linked to a satellite parked at 91° W

longitude. A data rate of 6 Mbps using 8-PSK modulation is being used, which requires a bandwidth of 2 MHz (63 dB). The required C/N at the satellite is 8 dB, and the required C/N at the earth station is 15 dB. Comment on the results obtained from the satellite link budget in regard to whether the received C/N is or is not acceptable.

**Earth Station**

| | |
|---|---|
| Uplink frequency | 14.135 GHz |
| Antenna Diameter | 5.0 meters |
| Antenna Efficiency | 0.65 |
| Earth Station G/T | 31.2 dBK |
| Transmit EIRP | 62 dBW (4.5 W) |

**Satellite**

| | |
|---|---|
| Downlink Frequency | 11.752 GHz |
| Satellite EIRP | 38.2 dBW |
| Satellite G/T | 0.9 dBK |

## Section 8

56. Describe the effects of EMI on a receiver.
57. Explain the best methods for reducing EMI.
58. Explain the problems associated with ghosting.
59. Explain the best way to reduce reflection.
60. Your television is exhibiting interference on the picture. How can you determine whether you have an EMI or RFI problem?
61. What are the three ways EMI can be picked up by a receiver? Explain how you can test to determine the source.

## Questions for Critical Thinking

62. A user complains about "interference." How can you determine whether this is electromagnetic interference (EMI) or radio-frequency interference (RFI)?
63. Calculate the radio horizon for a 500-ft transmitting antenna and a receiving antenna of 20 ft. Calculate the required height increase for the receiving antenna if a 10 percent increase in radio horizon were required. (37.9 mi, 31.2 ft)
64. In the strictest sense, define *skip distance* and *skip zone.*
65. You will be receiving sky waves. In what ways can you anticipate fading to occur?

*This page intentionally left blank*

# ANTENNAS

From *Modern Electronic Communication*, Ninth Edition, Jeffrey S. Beasley, Gary M. Miller. Copyright © 2008 by Pearson Education, Inc. Published by Prentice Hall. All rights reserved.

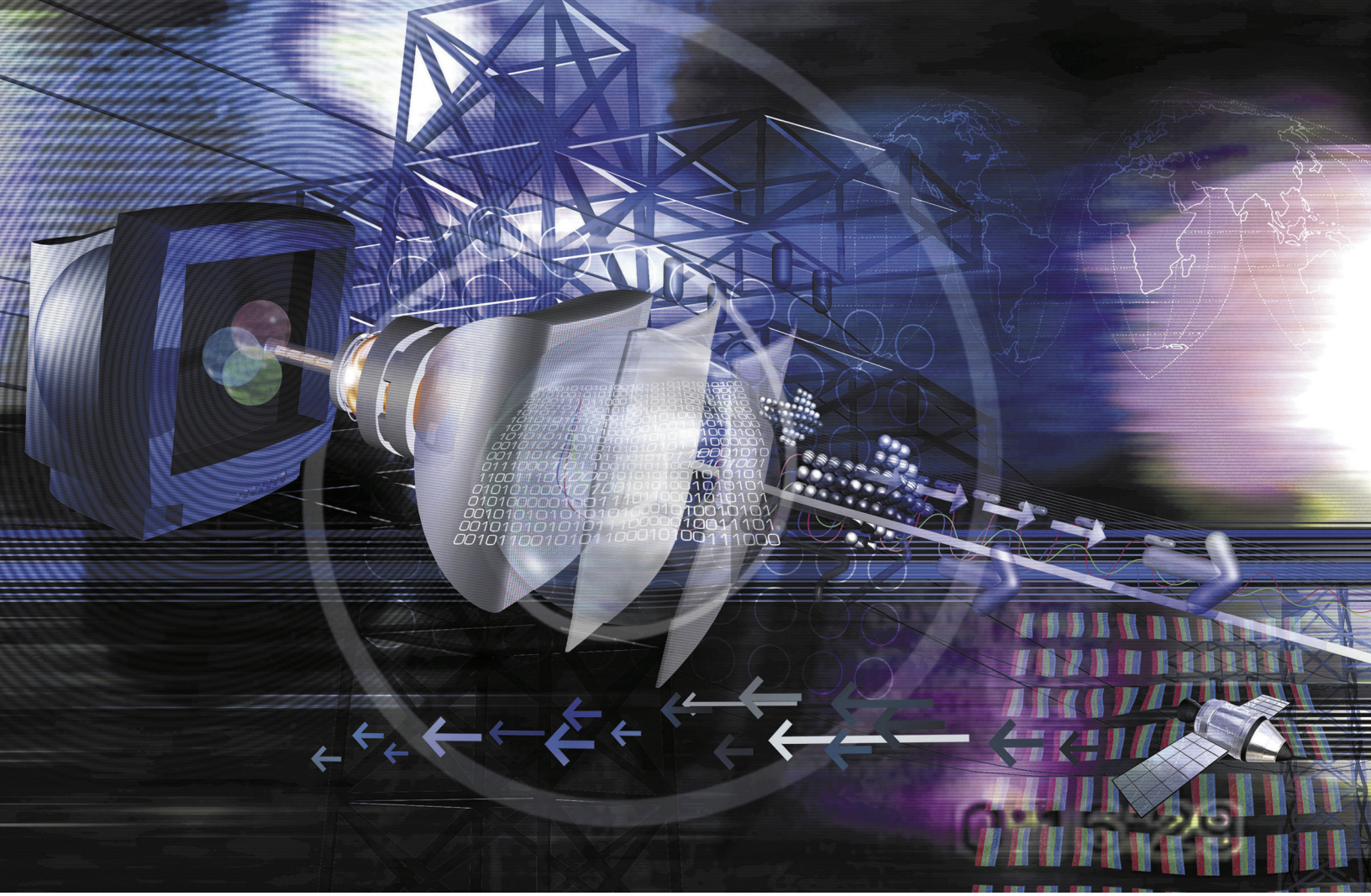

## Chapter Outline

1 Basic Antenna Theory
2 Half-Wave Dipole Antenna
3 Radiation Resistance
4 Antenna Feed Lines
5 Monopole Antenna
6 Antenna Arrays
7 Special-Purpose Antennas
8 Troubleshooting
9 Troubleshooting with Electronics Workbench™ Multisim

## Objectives

- Describe the development of the half-wave dipole antenna from transmission line theory
- Define the properties of antenna reciprocity and polarization
- Explain antenna radiation and induction field, radiation pattern, gain, and radiation resistance
- Calculate and define antenna efficiency
- Describe the physical and electrical characteristics of common antenna types and arrays
- Explain the ability to "electronically steer" the radiation pattern of phased arrays
- Differentiate between antenna beamwidth and bandwidth
- Design a log-periodic antenna given the range of frequencies it is to be operated over and its design ratio

# ANTENNAS

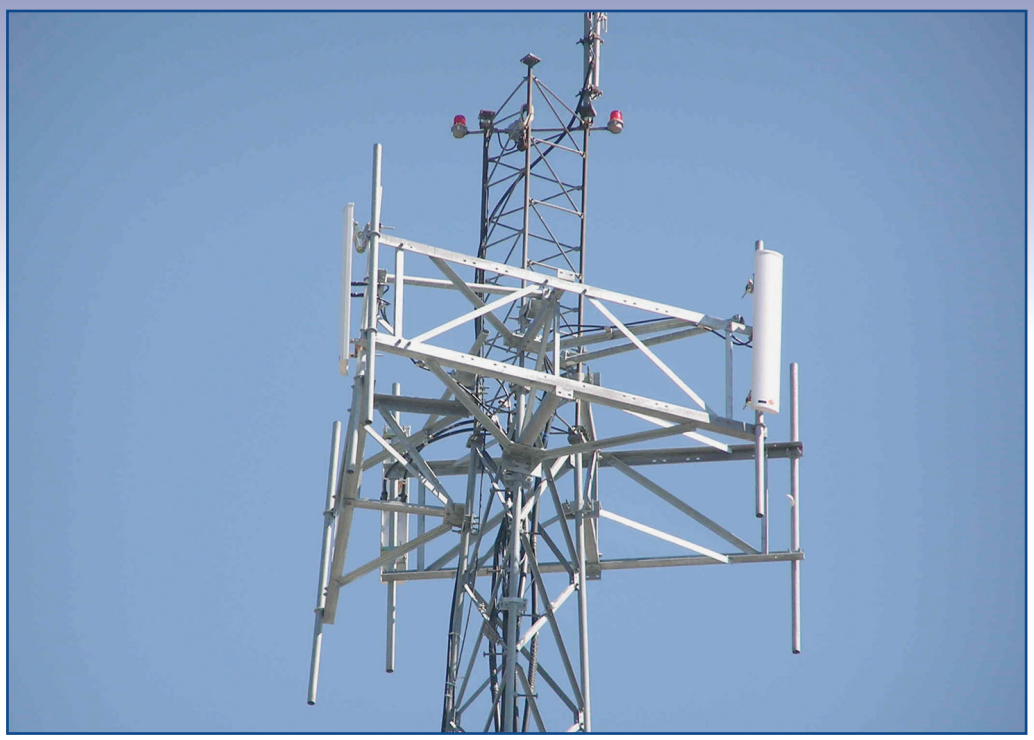

A cell phone antenna. (Courtesy of Wally Bloss.)

## Key Terms

reciprocity
polarization
half-wave antenna
dipole antenna
radiation field
induction field
near field
far field
radiation pattern
omnidirectional
directional
beamwidth
antenna gain
dBi
dBd
radiation resistance
corona discharge
feed line
delta match
monopole antenna
image antenna
counterpoise
loading coil
antenna array
parasitic array
reflector
director
lobes
front-to-back ratio
driven array
collinear array
phased array
null
twin lead
grid-dip meter
anechoic chamber



# 1 Basic Antenna Theory

In this chapter we introduce the fundamentals of antennas and describe the most commonly encountered types.

An antenna is a circuit element that provides a transition from a guided wave on a transmission line to a free space wave and it provides for the collection of electromagnetic energy. In a transmitting system, a radio-frequency signal is developed, amplified, modulated, and applied to the antenna. The RF currents flowing through the antenna produce electromagnetic waves that radiate into the atmosphere. In a receiving system, electromagnetic waves "cutting" through the antenna induce alternating currents for use by the receiver.

To have adequate signal strength at the receiver, either the power transmitted must be extremely high or the efficiency of the transmitting and receiving antennas must be high because of the high losses in wave travel between the transmitter and the receiver.

Any receiving antenna transfers energy from the atmosphere to its terminals with the same efficiency with which it transfers energy from the transmitter into the atmosphere. This property of interchangeability for transmitting and receiving operations is known as antenna **reciprocity.** Antenna reciprocity occurs because antenna characteristics are essentially the same regardless of whether an antenna is sending or receiving electromagnetic energy.

**Reciprocity**
an antenna's ability to transfer energy from the atmosphere to its receiver with the same efficiency with which it transfers energy from the transmitter into the atmosphere

Because of reciprocity, we will generally treat antennas from the viewpoint of the transmitting antenna, with the understanding that the same principles apply equally well when the antenna is used for receiving electromagnetic energy.

Antennas produce or collect electromagnetic energy and they should do so in an efficient manner. Consequently, antennas are composed of conductors arranged to permit efficient operation. Efficient operation also requires that the receiving antenna be of the same polarization as the transmitting antenna. **Polarization** is the direction of the electric field and is, therefore, the same as the antenna's physical configuration. Thus, a vertical antenna will transmit a vertically polarized wave. The received signal is theoretically zero if a vertical $E$ field cuts through a horizontal receiving antenna.

**Polarization**
the direction of the electric field of a given electromagnetic radiated signal

The received signal strength of an antenna is usually described in terms of the electric field strength. If a received signal induces a 10-$\mu$V signal in an antenna 2 m long, the field strength is 10 $\mu$V/2 m, or 5 $\mu$V/m. The received field strength is inversely proportional to the distance from the transmitter.



# 2 Half-Wave Dipole Antenna

Any antenna having a physical length that is one half-wavelength of the applied frequency is called a half-wave dipole antenna. Half-wave dipole antennas are predominantly used with frequencies above 2 MHz. It is unlikely that a half-wave dipole antenna will be found in applications below 2 MHz because at these low-frequencies this antenna is physically too large. Consider a half-wave dipole antenna for a 60-Hz signal.

$$\lambda = \frac{c}{f} = \frac{186{,}000 \text{ mi/s}}{60} = 3100 \text{ mi}$$

A $\frac{1}{2}\lambda$ antenna for 60 Hz is therefore 3100 mi/2, or 1550 mi!

## Development of the Half-Wave Dipole Antenna

One of the disadvantages of the open two-wire transmission line is excessive radiation at high frequencies. Radiation from a transmission line is undesirable since the perfect transmission line would be one that possessed no losses. Although the two-wire transmission line was considered to be an adequate transmission medium at extremely high frequencies, it can become an effective antenna. For this reason, an analysis of the open-ended, quarter-wave transmission line will furnish an excellent introduction for understanding basic antenna theory. The open-ended quarter-wave transmission line segment is shown in Figure 1.

The characteristics of the open-ended line are such that the voltage at the end of the line is maximum, and the current at the end is zero. This is true of an open-ended line regardless of the wavelength of the line. On either the open or shorted line, standing waves will be produced. Because the voltage applied to the line is sinusoidal, the line will constantly be charging and discharging. Current will be flowing in the line continuously. Because the current at the ends of the line is minimum, a quarter-wave back (at the source), the current must be maximum. The impedance at the sending end is low, and the impedance at the open circuit is high. At the open end, $E$ is high and $I$ is very low. This causes the impedance, $Z$, which is equal to $E/I$, to be very high. The opposite situation exists at the sending end. The standing waves of current and voltage are shown on the quarter-wave section in Figure 1.

It is desirable to have maximum radiation from an antenna. Under such conditions all energy applied to the antenna would be converted to electromagnetic waves and radiated. This maximum radiation is not possible with the two-wire transmission line because the magnetic field surrounding each conductor of the line is in a direction that opposes the lines of force about the other conductor. Under these conditions, the quarter-wave transmission line proves to be an unsatisfactory antenna; however, with only a slight physical modification, this section of transmission line can be transformed into a relatively efficient antenna. This transformation is accomplished by bending each line outward 90° to form a **half-wave,** or a $\lambda/2$ **dipole,** as shown in Figure 2.

**Half-Wave Antenna**
an antenna whose receive elements are one half-wavelength in length

**Dipole Antenna**
straight radiator typically one half-wavelength long, usually separated at the center by an insulator and fed by a balanced transmission line

The antenna shown in Figure 2 is composed of two quarter-wave sections. The electrical distance from the end of one to the end of the other is a half-wavelength. If voltage is applied to the line, the current is maximum at the input and minimum at the ends. The voltage is maximum between the ends, and minimum between the input terminals.

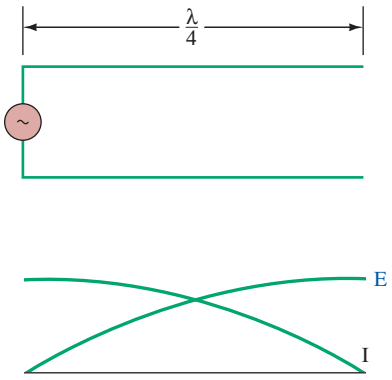


FIGURE 1 Quarter-wave transmission line segment (open-ended).

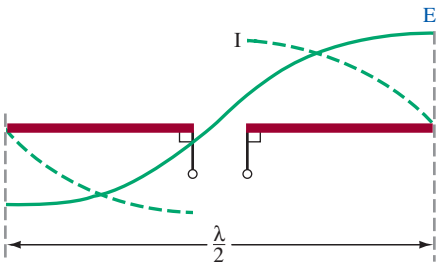


FIGURE 2 Basic half-wave dipole antenna.

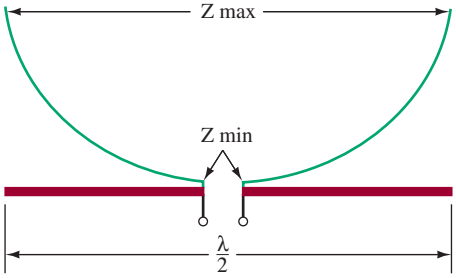


FIGURE 3 Impedance along a half-wave antenna.

## Half-Wave Dipole Antenna Impedance

An impedance value may be specified for a half-wave antenna thus constructed. Generally, the impedance at the ends is maximum, while that at the input is minimum. Consequently, the impedance value varies from a minimum value at the generator to a maximum value at the open ends. An impedance curve for the half-wave antenna is shown in Figure 3. Notice that the line has different impedance values for different points along its length. The impedance values for half-wave antennas vary from about 2500 Ω at the open ends to 73 Ω at the source ends.

## Radiation and Induction Field

Feeding the Hertz antenna at the center results in an input impedance that is purely resistive and equal to 73 Ω. Recall that with an open-circuited $\lambda/4$ transmission line, the input impedance was 0 Ω, and it could therefore not absorb power. By spreading the open $\lambda/4$ transmission line out into a half-wave dipole antenna, its input impedance has taken on a finite resistive value. It can now absorb power, but the question is, how? The answer is that it can now efficiently accept electrical energy and radiate it into space as electromagnetic waves. While the mechanisms of launching a wave from a current-carrying wire are not fully understood, the fields surrounding the antenna do not collapse their energy back into the antenna but rather radiate it out into space. This radiated field is appropriately termed the **radiation field.** Antennas also have an **induction field** associated with them. It is the portion of field energy that *does* collapse back into the antenna and is therefore limited to the zone immediately surrounding the antenna. Its effect becomes negligible at a distance more than about one-half wavelength from the antenna.

**Radiation Field**
radiation that surrounds an antenna but does not collapse its field back into the antenna

**Induction Field**
radiation that surrounds an antenna and collapses its field back into the antenna

**Near Field**
region less than $2D/\lambda$ from the antenna

**Far Field**
region greater than $2D/\lambda$ from the antenna

Other designators for antenna fields are the **near field** and the **far field.** The far-field region begins when the distance

$$\text{(a) } R_{ff} = 1.6\lambda: \qquad \frac{D}{\lambda} < 0.32 \tag{1a}$$

$$\text{(b) } R_{ff} = 5D: \qquad 0.32 < \frac{D}{\lambda} < 2.5 \tag{1b}$$

$$\text{(c) } R_{ff} = \frac{2D^2}{\lambda}: \qquad \geq 2.5\lambda \tag{1c}$$

where $R_{ff}$ = far field distance from the antenna [meters]
$D$ = dimension of the antenna [meters]
$\lambda$ = wavelength of the transmitted signal [meters/cycle]

The near-field region is any distance less than $R$. The effects of the induction field are negligible in the far field.

## Example 1

*Determine the distance from a λ/2 dipole to the boundary of the far field region if the λ/2 dipole is used in a 150-MHz communications system.*

### Solution

The wavelength ($\lambda$) for a $\lambda/2$ dipole at 150 MHz is approximately

$$\lambda = \frac{3 \times 10^8}{150 \times 10^6} = 2 \frac{\text{m}}{\text{cycle}}$$

Therefore $\lambda/2 = 1$ m, which is the antenna's dimension ($D$).

$$\frac{D}{\lambda} = \frac{1}{2} = 0.5$$

Therefore select Equation (1b).

$$R_{ff} = 5D = 5(1) = 5 \text{ m}$$

Therefore, the boundary for the far field region is any distance greater than 1 m from the antenna. In this case, the far-field distance is equal to the diameter ($D$) of the $\lambda/2$ dipole.

## Example 2

*Determine the distance from a parabolic reflector with diameter ($D$) = 4.5 m to the boundary of the far-field region if the parabolic reflector is used for Ku-band transmission of a 12-GHz signal.*

### Solution

The wavelength ($\lambda$) for a 12-GHz signal is approximately

$$\lambda = \frac{3 \times 10^8}{12 \times 10^9} = 0.025 \frac{\text{m}}{\text{cycle}}$$

$D = 4.5$ meter.

$$\frac{D}{\lambda} = \frac{4.5}{.025} = 180$$

Therefore, select Equation (1c).

$$R > \frac{2(4.5)^2}{0.025} = 1620 \text{ m}$$

Therefore, the boundary for the far field region for this parabolic reflector is a distance greater than 1620 m from the antenna. The far-field boundary for high-gain antennas (e.g., a parabolic reflector) will always be greater than for low-gain antennas (e.g., a dipole antenna).

## Radiation Pattern

**Radiation Pattern**
diagram indicating the intensity of radiation from a transmitting antenna or the response of a receiving antenna as a function of direction

**Omnidirectional**
a spherical radiation pattern

**Directional**
concentrating antenna energy in certain directions at the expense of lower energy in other directions

**Beamwidth**
the angular separation between the half-power points on an antenna's radiation pattern

The radiation pattern for the $\lambda/2$ dipole antenna is shown in Figure 4(a). A **radiation pattern** is an indication of radiated field strength around the antenna. The pattern shown in Figure 4(a) shows that maximum field strength for the $\lambda/2$ dipole occurs at right angles to the antenna, while virtually zero energy is launched "off the ends." So if you wish to communicate with someone, the best results would be obtained when he or she is in the direction of A or 180 degrees opposite; the person should not be located off the ends of the antenna. Let us consider an isotropic source of waves. Its radiation pattern is spherical, or as shown in two dimensions [Figure 4(b)], it is circular or **omnidirectional.** The half-wave dipole antenna is termed **directional** because it concentrates energy in certain directions at the expense of lower energy in other directions.

Another important concept is an antenna's **beamwidth.** It is the angular separation between the half-power points on its radiation pattern. It is shown for the $\lambda/2$ dipole in Figure 4(a). A three-dimensional radiation pattern cross section for a vertically polarized $\lambda/2$ dipole is shown in Figure 5. You can see that it is a doughnut-shaped pattern. If the antenna were mounted close to ground, the pattern would be altered by the effects of ground reflected waves.

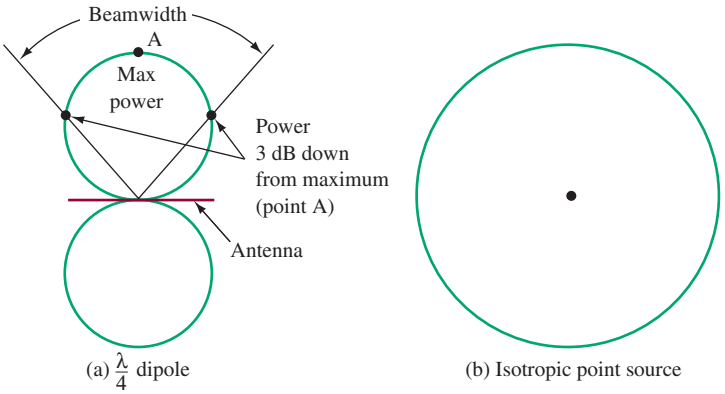


FIGURE 4 Radiation patterns.

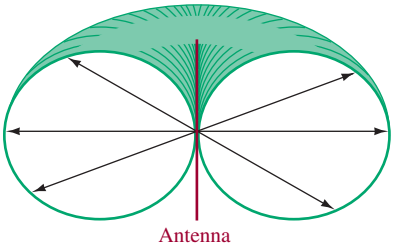


FIGURE 5 Three-dimensional radiation pattern for a $\lambda/2$ dipole.

**Antenna Gain**
a measure of how much more power in dB an antenna will radiate in a certain direction with respect to that which would be radiated by a reference antenna, i.e., an isotropic point source or dipole

## Antenna Gain

The half-wave dipole antenna has *gain* with respect to the theoretical isotropic radiator. **Antenna gain** is different from amplifier gain because feeding 50 W into a

dipole does not result in more than 50 W of radiated field energy. It is, instead, a gain relative to a reference antenna. The dipole, therefore, has a gain relative to the isotropic radiator in a certain direction. The half-wave dipole antenna has a 2.15-dB gain (at right angles to the antenna) as compared to an isotropic radiator. However, because a perfect isotropic radiator cannot be practically realized, the $\lambda/2$ dipole antenna is sometimes taken as the standard reference to which all other antennas are compared with respect to their *gain*. When the gain of an antenna is multiplied by its power input, the result is termed its effective radiated power (ERP). For instance, an antenna with a gain of 7 and fed with 1 kW has an ERP of 7 kW.

The gain for an antenna whose gain is provided with respect to an isotropic radiator is often expressed as **dBi.** In other words, the half-wave dipole antenna's gain can be expressed as 2.15 dBi. If an antenna's gain is given in decibels with respect to a dipole, it is expressed as **dBd.** This occurs somewhat less often than dBi in antenna literature. The gain of an antenna in dBi is 2.15 dB more than when expressed in dBd. Thus, an antenna with a gain of 3 dBd has a gain of 5.15 dBi (3 dB + 2.15 dB).

**dBi**
antenna gain relative to an isotropic radiator

**dBd**
antenna gain relative to a dipole antenna

The amount of power received by an antenna through free space can be predicted by the following:

$$P_r = \frac{P_t G_t G_r \lambda^2}{16\pi^2 d^2} \tag{2}$$

where $P_r$ = power received (W)
$P_t$ = power transmitted (W)
$G_t$ = transmitting antenna gain (ratio, not dB) compared to isotropic radiator
$G_r$ = receiving antenna gain (ratio, not dB) compared to isotropic radiator
$\lambda$ = wavelength (m)
$d$ = distance between antennas (m)

## Example 3

*Two $\lambda/2$ dipoles are separated by 50 km. They are "aligned" for optimum reception. The transmitter feeds its antenna with 10 W at 144 MHz. Calculate the power received.*

### Solution

The two dipoles have a gain of 2.15 dB. That translates into a gain ratio of $\log^{-1} 2.15$ dB = 1.64.

$$P_r = \frac{P_t G_t G_r \lambda^2}{16\pi^2 d^2} \tag{2}$$

$$= \frac{10\text{ W} \times 1.64 \times 1.64 \times \left(\frac{3 \times 10^8\text{ m/s}}{144 \times 10^6}\right)^2}{16\pi^2 \times (50 \times 10^3\text{ m})^2}$$

$$= 2.96 \times 10^{-10}\text{ W}$$

The received signal in Example 3 would provide a voltage of 147 $\mu$V into a matched 73-$\Omega$ receiver system [$(P = V^2/R), v = (2.96 \times 10^{-10}\text{ W} \times 73\ \Omega) = 147\ \mu\text{V}$]. This is a relatively strong signal because receivers can often provide a usable output with less than a 1-$\mu$V signal.



## 3 Radiation Resistance

**Radiation Resistance**
the portion of an antenna's input impedance that results in power radiated into space

The portion of an antenna's input impedance that is the result of power radiated into space is called the **radiation resistance,** $R_r$. Note that $R_r$ is not the resistance of the conductors that form the antenna. It is simply an effective resistance that is related to the power radiated by the antenna. Since a relationship exists between the power radiated by the antenna and the antenna current, radiation resistance can be mathematically defined as the ratio of total power radiated to the square of the effective value of antenna current, or

$$R_r = \frac{P}{I^2} \tag{3}$$

where $R_r$ = radiation resistance (Ω)
$I$ = effective rms value of antenna current at the feed point (A)
$P$ = total power radiated from the antenna

It should be mentioned at this point that not all of the energy absorbed by the antenna is radiated. Power may be dissipated in the actual antenna conductor by high-powered transmitters, by losses in imperfect dielectrics near the antenna, by eddy currents induced in metallic objects within the antenna's induction field, and by arcing effects in high-powered transmitters. These arcing effects are termed **corona discharge.** If these losses are represented by one lumped value of resistance, $R_d$, and the sum of $R_d$ and $R_r$ is called the antenna's total resistance, $R_T$, the antenna's efficiency can be expressed as

**Corona Discharge**
luminous discharge of energy by an antenna from ionization of the air around the surface of the conductor

$$\eta = \frac{P_{\text{transmitted}}}{P_{\text{input}}} = \frac{R_r}{R_r + R_d} = \frac{R_r}{R_T} \tag{4}$$

### Effects of Antenna Length

The radiation resistance varies with antenna length, as shown in Figure 6. For a half-wave antenna, the radiation resistance measured at the current maximum (center of the antenna) is approximately 73 Ω. For a quarter-wave antenna, the radiation resistance measured at its current maximum is approximately 36.6 Ω. These are free-space values, that is, the values of radiation resistance that would exist if the antenna were completely isolated so that its radiation pattern would not be affected by ground or other reflections.

### Ground Effects

For practical antenna installations, the height of the antenna above ground affects radiation resistance. Changes in radiation resistance occur because of ground reflections that intercept the antenna and alter the amount of antenna current flowing. Depending on their phase, the reflected waves may increase antenna current or decrease it. The phase of the reflected waves arriving at the antenna, in turn, is a function of antenna height and orientation.

At some antenna heights, it is possible for a reflected wave to induce antenna currents in phase with transmitter current so that total antenna current increases. At other antenna heights, the two currents may be 180° out of phase so that total antenna current is less than if no ground reflection occurred.

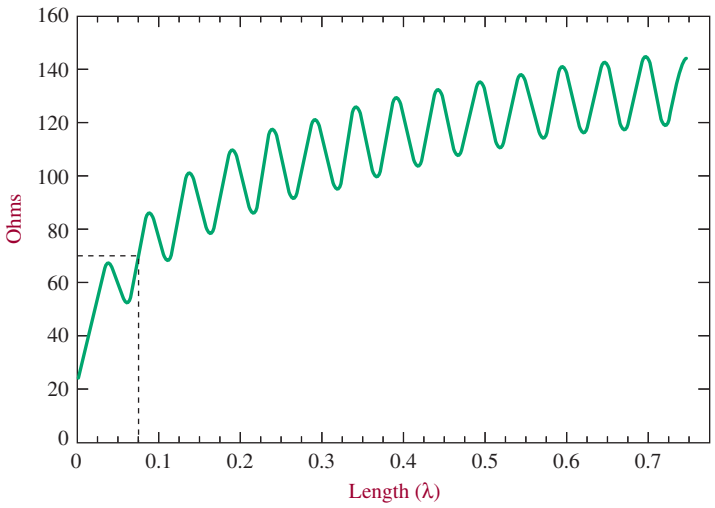


FIGURE 6 Radiation resistance of antennas in free space plotted against length.

With a given input power, if antenna current increases, the effect is as if radiation resistance decreases. Similarly, if the antenna height is such that the total antenna current decreases, the radiation resistance is increased. The actual change in radiation resistance of a half-wave antenna at various heights above ground is shown in Figure 7. The radiation resistance of the horizontal antenna rises steadily to a maximum value of 90 Ω at a height of about three-eighths wavelength. The resistance then continues to rise and fall around an average value of 73 Ω, which is the free-space value. As the height is increased, the amount of variation keeps decreasing.

The variation in radiation resistance of a vertical antenna is much less than that of the horizontal antenna. The radiation resistance (dashed line in Figure 7) is a maximum value of 100 Ω when the center of the antenna is a quarter-wavelength above ground. The value falls steadily to a minimum value of 70 Ω at a height of a

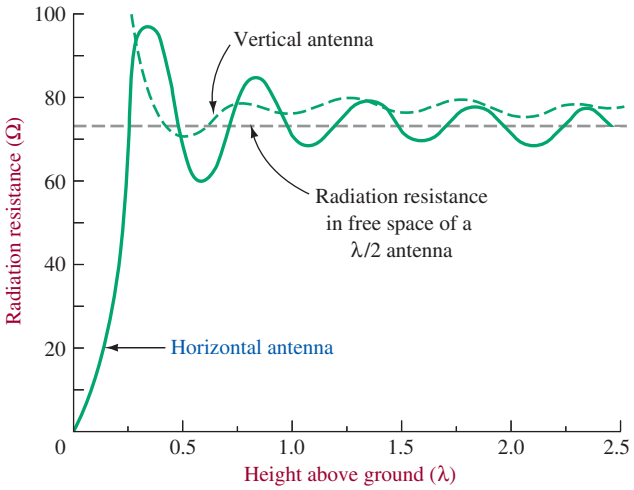


FIGURE 7 Radiation resistance of half-wavelength antennas at various heights.

half-wavelength above ground. The value then rises and falls by several ohms about an average value slightly above the free-space value of a horizontal half-wave antenna.

Since antenna current is affected by antenna height, the field intensity produced by a given antenna also changes. In general, as the radiation resistance is reduced, the field intensity increases, whereas an increase in radiation resistance produces a drop in radiated field intensity.

## Electrical versus Physical Length

If an antenna is constructed of very thin wire and is isolated in space, its electrical length corresponds closely to its physical length. In practice, however, an antenna is never isolated completely from surrounding objects. For example, the antenna will be supported by insulators with a dielectric constant greater than 1. The dielectric constant of air is arbitrarily assigned a numerical value equal to 1. Therefore, the velocity of a wave along a conductor is always slightly less than the velocity of the same wave in free space, and the physical length of the antenna is less (by about 5 percent) than the corresponding wavelength in space. The physical length can be approximated as about 95 percent of the calculated electrical length.

### Example 4

*We want to build a λ/2 dipole to receive a 100-MHz broadcast. Determine the optimum length of the dipole.*

#### Solution

At 100 MHz,

$$\lambda = \frac{c}{f} = \frac{3 \times 10^8 \text{ m/s}}{100 \times 10^6 \text{ Hz}} = 3 \text{ m}$$

Therefore, its electrical length is λ/2, or 1.5 m. Applying the 95 percent correction factor, the actual optimum physical length of the antenna is

$$0.95 \times 1.5 \text{ m} = 1.43 \text{ m}$$

The result of the preceding example is also obtained by using the following formula:

$$L = \frac{486}{f(\text{MHz})} \tag{5}$$

where $L$ is dipole length in feet. For Example 4, it would give $L = \frac{468}{100} = 4.68$ ft, which is equal to 1.43 m.

## Effects of Nonideal Length

The 95 percent correction factor is an approximation. If ideal results are desired, a trial-and-error procedure is used to find the exact length for optimum antenna performance. If the antenna length is not the optimum value, its input impedance looks

like a capacitive circuit or an inductive circuit depending on whether the antenna is shorter or longer than the specified wavelength. A half-wave dipole antenna slightly longer than a half-wavelength acts like an inductive circuit, and an antenna slightly shorter than a half-wavelength appears to the source as a capacitive circuit. Compensation for additional length can be made by cutting the antenna down to proper length or by tuning out the inductive reactance by adding a capacitance in series. This added $X_c$ completely cancels the inductive reactance, and the source then sees a pure resistance, provided the proper size capacitor is used. If an antenna is shorter than the required length, the source end of the line appears capacitive. This condition may be corrected by adding inductance in series with the antenna input.



## 4 Antenna Feed Lines

Two of the most common ways to describe antennas are based on the point at which the transmission line connects to the antenna. Connect the line to the end of the antenna and we have an end-fed antenna; connect it to the center and it is called center fed. If the transmission line joins the antenna at a high-voltage point, the antenna is said to be voltage fed. Conversely, connect to a high-current point and we have a current-fed antenna. All of these types are shown in Figure 8.

It is seldom possible to connect a generator directly to an antenna. It is usually necessary to transfer energy from the generator (transmitter) to the antenna by use of a transmission line (also called an antenna **feed line**). Such lines may be resonant, nonresonant, or a combination of both types.

**Feed Line**
transmission line that transfers energy from the generator to the antenna

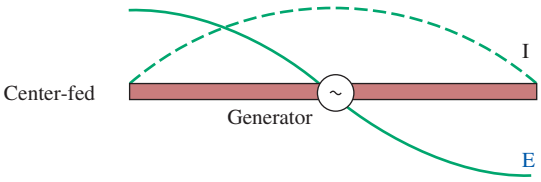


(a) Generator at current maximum means current feed

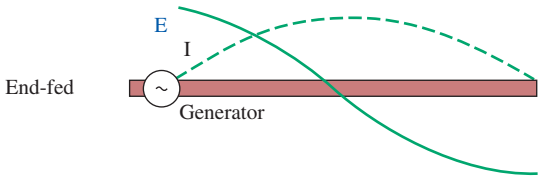


(b) Generator at voltage maximum means voltage feed

FIGURE 8 (a) Current feed and (b) voltage feed.

### Resonant Feed Line

The resonant transmission line is not widely used as an antenna feed method because it tends to be inefficient and is very critical with respect to its length for a particular operating frequency. In certain high-frequency applications, however, resonant feeders sometimes prove convenient.

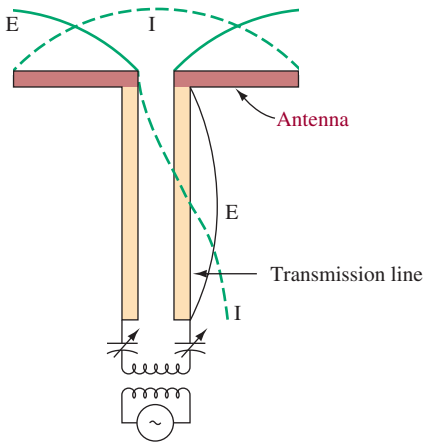


FIGURE 9 Current feed with resonant line.

In the current-fed antenna with a resonant line, shown in Figure 9, the transmission line is connected to the center of the antenna. This antenna has a low impedance at the center and, like the voltage-feeding transmission line, has standing waves on it. Constructing it to be exactly a half-wavelength causes the impedance at the sending end to be low. A series resonant circuit is used to develop the high currents needed to excite the line. Adjusting the capacitors at the input compensates for slight irregularities in line and antenna length.

Although this example of an antenna feed system is a simple one, the principles described apply to antennas and to lines of any length provided both are resonant. The line connected to the antenna may be either a two-wire or coaxial line. In high-frequency applications, the coaxial line is preferred due to its lower radiation loss.

One advantage of connecting a resonant transmission line to an antenna is that it makes impedance matching unnecessary. In addition, it makes it possible to compensate for any irregularities in either the line or the antenna by providing the appropriate resonant circuit at the input. Its disadvantages are increased power losses in the line due to high standing waves of current, increased probability of arc-over because of high standing waves of voltage, very critical length, and production of radiation fields by the line due to the standing waves on it.

## Nonresonant Feed Line

The nonresonant feed line is the more widely used technique. The open-wire line, the shielded pair, the coaxial line, and the twisted pair may be used as nonresonant lines. This type of line has negligible standing waves if it is properly terminated in its characteristic impedance at the antenna end. It has a great advantage over the resonant line because its operation is practically independent of its length.

The illustrations in Figure 10 show the excitation of a half-wave antenna by nonresonant lines. If the input to the center of the antenna in Figure 10(a) is 73 Ω and if the coaxial line has a characteristic impedance of 73 Ω, a common method of feeding this antenna is accomplished by connecting directly to the center of the

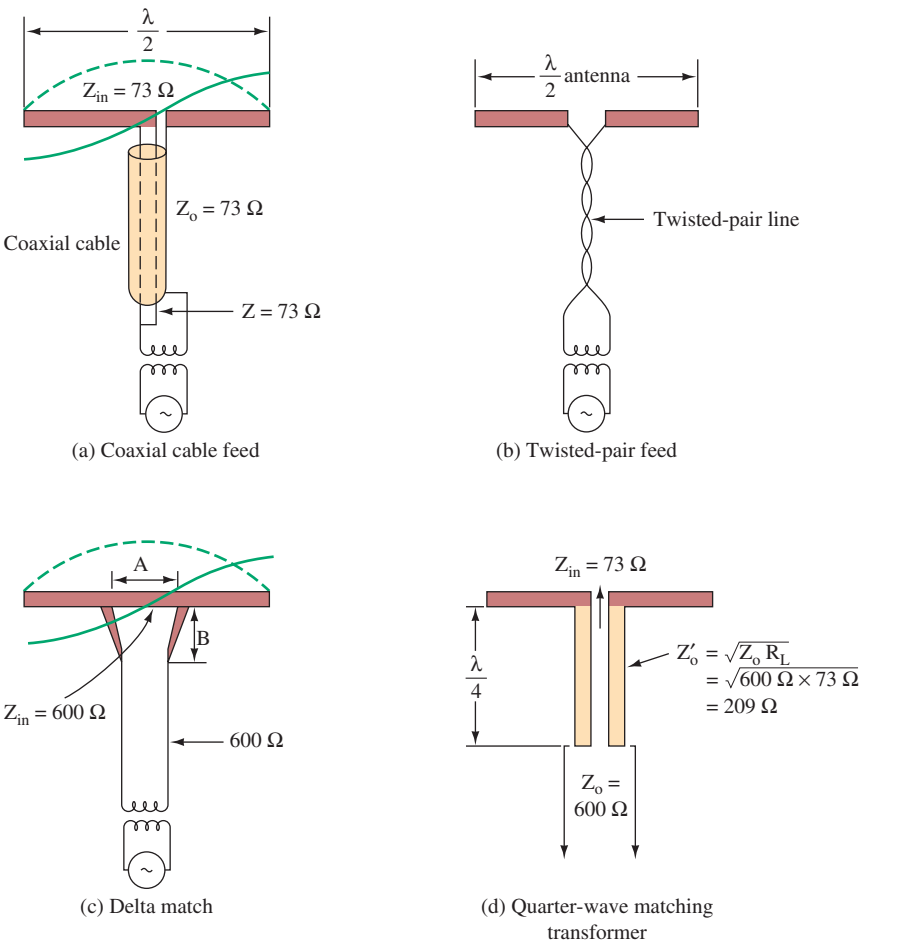


FIGURE 10 Feeding antennas with nonresonant lines.

antenna. This method of connection produces no standing waves on the line when the line is matched to a generator. Coupling to a generator is often made through a simple untuned transformer secondary.

Another method of transferring energy to the antenna is through the use of a twisted-pair line, as shown in Figure 10(b). It is used as an untuned line for low frequencies. Due to excessive losses occurring in the insulation, the twisted pair is not used at higher frequencies. The characteristic impedance of such lines is about 70 Ω.

## Delta Match

When a line does not match the impedance of the antenna, it is necessary to use special impedance matching techniques. An example of an additional type of impedance matching device is the **delta match,** shown in Figure 10(c). Due to inherent characteristics, the open, two-wire transmission line does not have a characteristic impedance ($Z_0$) low enough to match a center-fed dipole with

**Delta Match**
an impedance matching device that spreads the transmission line as it approaches the antenna

$Z_{in} = 73\ \Omega$. Practical values of $Z_0$ for such lines lie in the range 300 to 700 Ω. To provide the required impedance match, a delta section [shown in Figure 10(c)] is used. This match is obtained by spreading the transmission line as it approaches the antenna. In the example given, the characteristic impedance of the line is 600 Ω, and the center impedance of the antenna is 73 Ω. As the end of the transmission line is spread, its characteristic impedance increases. Proceeding from the center of the antenna to either end, a point will be reached where the antenna impedance equals the impedance at the output terminals of the delta section. Recall that the antenna impedance increases as you move from its center to the ends. The delta section is then connected at this distance to either side of the antenna center.

The delta section becomes part of the antenna and, consequently, introduces radiation loss (one of its disadvantages). Another disadvantage is that trial-and-error methods are usually required to determine the dimensions of the A and B sections for optimum performance. Both the distance between the delta output terminals (its width) and the length of the delta section are variable, so adjustment of the delta match is difficult.

### Quarter-Wave Matching

Still another impedance-matching device is the quarter-wave transformer, or matching transformer, as shown in Figure 10(d). This device is used to match the low impedance of the antenna to the line of higher impedance. The quarter-wave matching section is effective only between a line and purely resistive loads.

To determine the characteristic impedance ($Z'_0$) of the quarter-wave section, the following formula is used.

$$Z'_0 = \sqrt{Z_0 R_L} \tag{29}$$

where $Z'_0$ = characteristic impedance of the matching line
$Z_0$ = impedance of the feed line
$R_L$ = resistive impedance of the radiating element

For the example shown, $Z'_0$ has a value slightly over 209 Ω. With this matching device, standing waves will exist on the $\lambda/4$ section but not on the 600-Ω line. The use of stub matching techniques is another alternative.

This matching technique is useful for narrowband operation, while the delta section is more broadband in operation.



## 5 Monopole Antenna

**Monopole Antenna**
usually a quarter-wave grounded antenna

The **monopole antenna** (sometimes called a vertical antenna) is used primarily with frequencies below 2 MHz. The difference between the vertical antenna and the half-wave dipole antenna is that the vertical type requires a conducting path to ground, and the half-wave dipole type does not. The monopole antenna is usually a quarter-wave grounded antenna or any odd multiple of a quarter-wavelength.

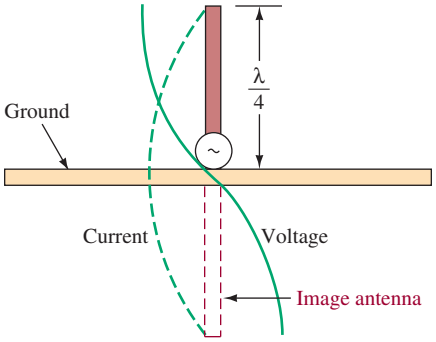


FIGURE 11 Grounded monopole antenna.

## Effects of Ground Reflection

A monopole antenna used as a transmitting element is shown in Figure 11. The transmitter is connected between the antenna and ground. The actual length of the antenna is one quarter-wavelength. However, this type of antenna, by virtue of its connection to ground, uses the ground as the other quarter-wavelength, making the antenna electrically a half-wavelength. This is so because the earth is considered to be a good conductor. In fact, there is a reflection from the earth that is equivalent to the radiation that would be realized if another quarter-wave section were used. The reflection from the ground looks as if it is coming from a λ/4 section beneath the ground. This is known as the **image antenna** and is shown in Figure 11. By use of the monopole antenna, which is a quarter-wave in actual physical length, half-wave operation may be obtained. All of the voltage, current, and impedance relationships characteristic of a half-wave antenna also exist in this antenna. The only exception is the input impedance, which is approximately 36.6 Ω at the base. The effective current in the monopole grounded antenna is maximum at the base and minimum at the top, while voltage is minimum at the bottom and maximum at the top.

**Image Antenna**
the simulated λ/4 antenna resulting from the earth's conductivity with a monopole antenna

When the conductivity of the soil in which the monopole antenna is supported is very low, the reflected wave from the ground may be greatly attenuated. A great attenuation of the reflected signal is highly undesirable. To overcome this disadvantage, the site location can be moved to a location where the soil possesses a high conductivity, such as damp areas. If it is impractical to move the site, provisions must be made to improve the reflecting characteristics of the ground by installing a buried ground screen.

## The Counterpoise

When an actual ground connection cannot be used because of the high resistance of the soil or a large buried ground screen is impractical, a **counterpoise** may replace the usual direct ground connection. This is required for monopole antennas mounted on the top of tall buildings. The counterpoise consists of a structure made of wire erected a short distance above the ground and *insulated from the ground.* The size of the counterpoise should be at least equal to, and preferably larger than, the size of the antenna.

**Counterpoise**
reflecting surface of a monopole antenna if the actual earth ground cannot be used; a flat structure of wire or screen placed a short distance above ground with at least a quarter-wavelength radius

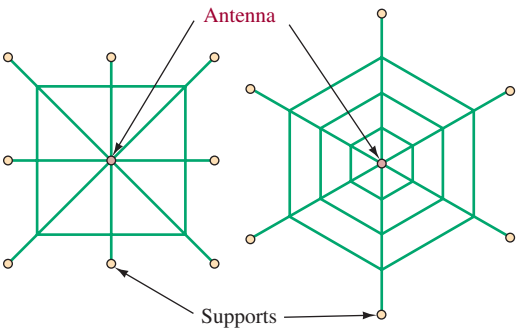


FIGURE 12 Counterpoise (top view).

The counterpoise and the surface of the ground form a large capacitor. Due to this capacitance, antenna current is collected in the form of charge and discharge currents. The end of the antenna normally connected to ground is connected through the large capacitance formed by the counterpoise. If the counterpoise is not well insulated from ground, the effect is much the same as that of a leaky capacitor, with a resultant loss greater than if no counterpoise were used.

Although the shape and size of the counterpoise are not particularly critical, it should extend for equal distances in all directions. When the antenna is mounted vertically, the counterpoise may have any simple geometric pattern, like those shown in Figure 12. The counterpoise is constructed so that it is nonresonant at the operating frequency. The operation realized by use of either the well-grounded monopole antenna or the monopole antenna using a counterpoise is the same as that of the half-wave antenna of the same polarization.

## Radiation Pattern

The radiation pattern for a monopole antenna is shown in Figure 13(a). It is omnidirectional in the ground plane but falls to zero off the antenna's top. Thus, a large amount of energy is launched as a ground wave, but appreciable sky-wave energy also exists. By increasing the vertical height to $\lambda/2$, the ground-wave strength is increased, as shown in Figure 13(b). The maximum ground-wave strength is obtained by using a length slightly less than $5/8\lambda$. Any greater length produces

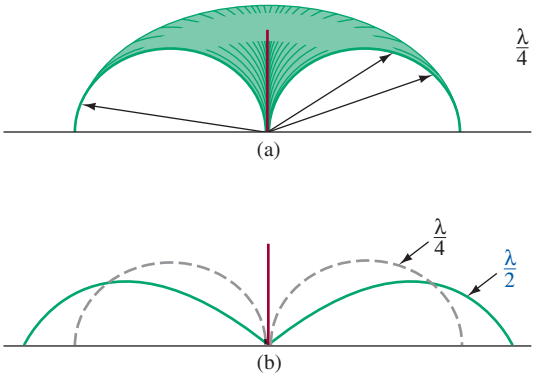


FIGURE 13 Monopole antenna radiation patterns.

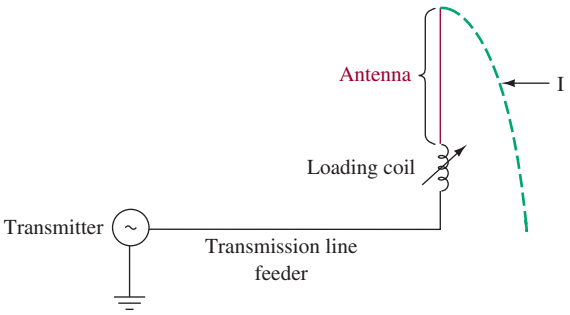


FIGURE 14 Monopole antenna with loading coil.

high-angle radiation of increasing strength, and horizontal radiation is reduced. At a height of 1λ, there is no ground wave.

## Loaded Antennas

In many low-frequency applications, it is not practical to use an antenna that is a full quarter-wavelength. This is especially true for mobile transceiver applications. Monopole antennas less than a quarter-wavelength have an input impedance that is highly capacitive, and they become inefficient radiators. The reason for this is that a highly reactive load cannot accept energy from the transmitter. It is reflected and sets up high standing waves on the feeder transmission line. An example of this is a λ/8 vertical antenna, which exhibits an input impedance of about 8 Ω − *j*500 Ω at its base.

To remedy this situation, the *effective* height of the antenna should be λ/4, and this can be accomplished with several different techniques. Figure 14 shows a series inductance that is termed a **loading coil.** It is used to tune out the capacitive appearance of the antenna. The coil–antenna combination can thus be made to appear resonant (resistive) so that it can absorb the full transmitter power. The inductor can be variable to allow adjustment for optimum operation over a range of transmitter frequencies. Notice the standing wave of current shown in Figure 14. It has maximum amplitude at the loading coil and thus does not add to the radiated power. This results in heavy $I^2R$ losses in the coil instead of this energy being radiated. However, the transmission line feeding the loading coil/antenna is free of standing waves when the loading coil is properly tuned.

**Loading Coil**
a series inductance used to tune out the capacitive appearance of an antenna

A more efficient solution is the use of top loading, as shown in Figure 15(a). Notice that the high-current standing wave now exists at the base of the antenna

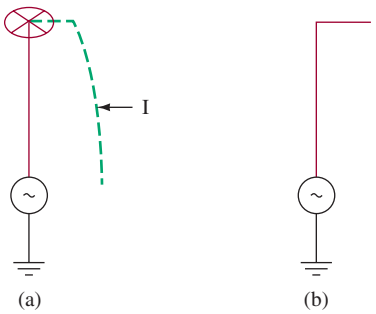


FIGURE 15 Top-loaded monopole antennas.



A mobile communications tower. (Courtesy of Melissa Akers, Fredericktown, OH.)

so that maximum possible radiation now occurs. The metallic *spoked wheel* at the top adds shunt capacitance to ground. This additional capacitance reduces the antenna's capacitive reactance because $C$ and $X_c$ are inversely related. The antenna can, therefore, be made nearly resonant with the proper amount of top loading. This does not allow for convenient variable frequency operation as with the loading coil, but it is a more efficient radiator. The *inverted L* antenna in Figure 15(b) accomplishes the same goal as the top-loaded antenna but is usually less convenient to construct physically.



# 6 Antenna Arrays

## Half-Wave Dipole Antenna with Parasitic Element

**Antenna Array**
group of antennas or antenna elements arranged to provide the desired directional characteristics

**Parasitic Array**
when one or more of the elements in an antenna array is not electrically connected

An **antenna array** is one that has more than one element or component. If one or more of the elements is not electrically connected, it is called a **parasitic array.** The most elementary antenna array is shown in Figure 16(a). It consists of a simple half-wave dipole and a nondriven (not electrically connected) half-wave element located a quarter-wavelength behind the dipole. The nondriven element is also termed a *parasitic* element because it is not electrically connected.

The dipole radiates electromagnetic waves with the usual bidirectional pattern. However, the energy traveling toward the parasitic element, upon reading it, induces voltages and currents but incurs a 180° phase shift in the process. These voltages and currents cause the parasitic element also to radiate a bidirectional wave pattern. However, due to the 180° phase shift, the energy traveling away from the driven element cancels that from the driven element. The energy from the parasitic element traveling toward the driven element reaches it in phase and causes a doubling of energy propagated in that direction. This effect is shown by the radiation pattern in Figure 16(b). The parasitic element is also termed a **reflector** because it effectively "reflects" energy from the driven element. Notice that this simple array has resulted in a more directive antenna and thus exhibits gain with respect to a standard half-wave dipole antenna.

**Reflector**
the parasitic element that effectively reflects energy from the driven element

Let us consider *why* the energy from the reflector gets back to the driven element in phase and thus reinforces propagation in that direction. Recall that the initial energy from the driven element travels a quarter-wavelength before reaching the reflector. This is equivalent to 90 electrical degrees of phase shift. An additional 180° of phase shift occurs from the induction of voltage and current into the reflector. The reflector's radiated energy back toward the driven element experiences another 90° of phase shift before reaching the driven element. Thus, a total phase shift of 360° (90° + 180° + 90°) results so that the reflector's energy reaches the driven element in phase.

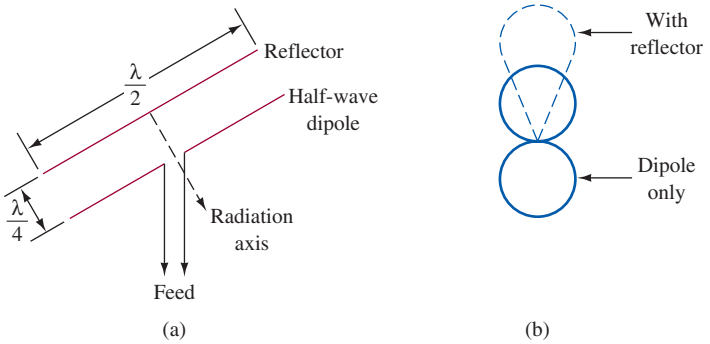


FIGURE 16 Elementary antenna array.

## Yagi–Uda Antenna

**Director**
the parasitic element that effectively directs energy in the desired direction

**Lobes**
small amounts of radiation shown on a radiation pattern; generally undesirable

**Front-to-Back Ratio**
the difference in antenna gain in dB from the forward to the reverse direction

The Yagi–Uda antenna consists of a driven element and two or more parasitic elements. It is named after the two Japanese scientists who were instrumental in its development. The version shown in Figure 17(a) has two parasitic elements: a reflector and a director. A **director** is a parasitic element that serves to "direct" electromagnetic energy because it is in the direction of the propagated energy with respect to the driven element. The radiation pattern is shown in Figure 17(b). Notice the two side **lobes** of radiated energy that result. They are generally undesired, as is the small amount of reverse propagation. The difference in gain from the forward to the reverse direction is defined as the **front-to-back ratio** (*F*/*B* ratio). For example, the pattern in Figure 17(b) has a forward gain of 12 dB and a −3 dB gain (actually, loss, because it is a negative gain) in the reverse direction. Its *F*/*B* ratio is therefore [12 dB − (− 3 dB)], or 15 dB.

This Yagi–Uda antenna provides about 10 dB of power gain with respect to a half-wavelength dipole reference. This is somewhat better than the approximate 3-dB gain of the simple array shown in Figure 16. In practice, the Yagi–Uda antenna often consists of one reflector and two or more directors to provide even better gain characteristics. They are often used as HF transmitting antennas and as VHF/UHF television receiving antennas.

The analysis of how the radiation patterns of these antennas result is rather complex and cannot be simply accomplished, as was done for the simple array shown in Figure 16. More often than not, the lengths and spacings of the parasitic elements are the result of experiments rather than theoretical calculations.

## Driven Collinear Array

**Driven Array**
multielement antenna in which all the elements are excited through a transmission line

**Collinear Array**
any combination of half-wave elements in which all the elements are excited by a connected transmission line

A **driven array** is a multielement antenna in which all of the elements are excited through a transmission line. A four-element collinear array is shown in Figure 18(a). A **collinear array** is any combination of half-wave elements in which all the elements are placed end to end to form a straight line. Each element is excited so that their fields are all in phase (additive) for points perpendicular to the array. This is accomplished by the λ/2 length of transmission line (a λ/4 twisted pair) between the

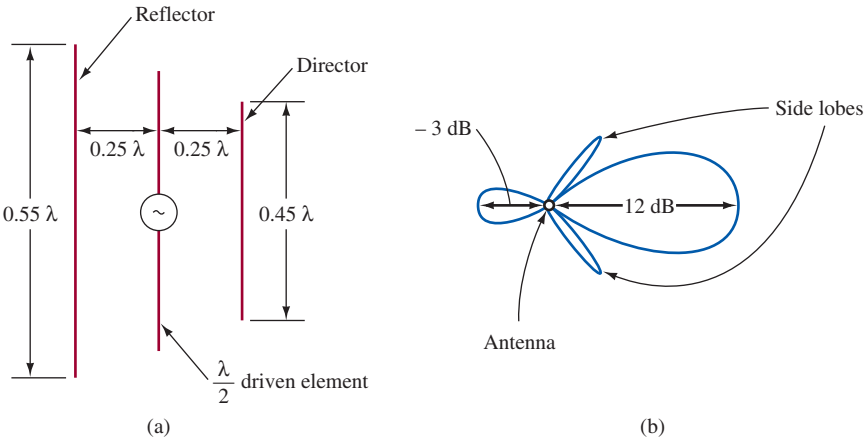


FIGURE 17 Yagi–Uda antenna.

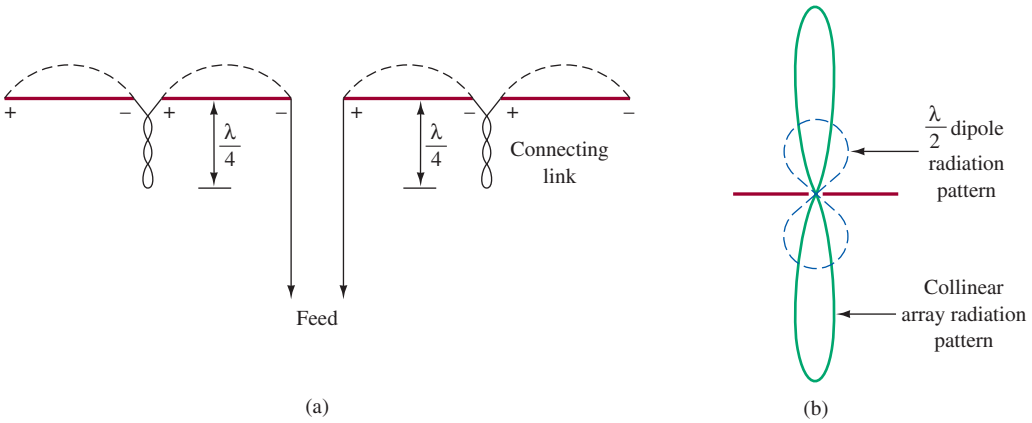


FIGURE 18 Four-element collinear array.

elements on both sides of the feed point. They are twisted so that the fields created by the line cancel each other to minimize losses.

The radiation pattern for this antenna is provided in Figure 18(b). Energy off the ends is canceled from the $\lambda/2$ spacing (cancellation) of elements, but reinforcement takes place perpendicular to the antenna. The resulting radiation pattern thus has gain with respect to the standard half-wave dipole antenna radiation pattern shown with dashed lines in Figure 18(b). It has gain at the expense of energy propagated away from the antenna's perpendicular direction. The full three-dimensional pattern for both antennas is obtained by revolving the pattern shown about the antenna axis. This results in the doughnut-shaped pattern for the half-wave dipole antenna and flattened doughnut shape for this collinear array. The array is a more directive antenna (smaller beamwidth). Increased directivity and gain are obtained by adding more collinear elements.

## Broadside Array

If a group of half-wave elements is mounted vertically, one over the other, as shown in Figure 19, a broadside array is formed. Such an array provides greater directivity in both the vertical and horizontal planes than the collinear array. With the arrangement shown in Figure 19, the separation between each stack is a half-wavelength. The signal reversal shown in the connecting wires puts the voltage and current in each element of each stack in phase. The net resulting radiation pattern is a directive pattern in the horizontal plane (as with the collinear array) but also a directive pattern in the vertical plane (in contrast to the collinear array).

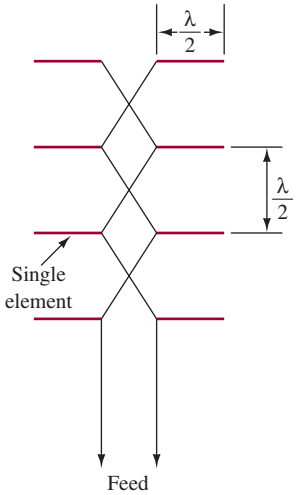


FIGURE 19 Eight-element broadside array.

## Vertical Array

You have probably noticed that some standard broadcast AM transmitters usually utilize three or more vertical antennas lined up in a row with equal spacing between them. The radiation pattern of a single vertical antenna is omnidirectional in the horizontal plane, which may be undesirable due to interference possibilities with an

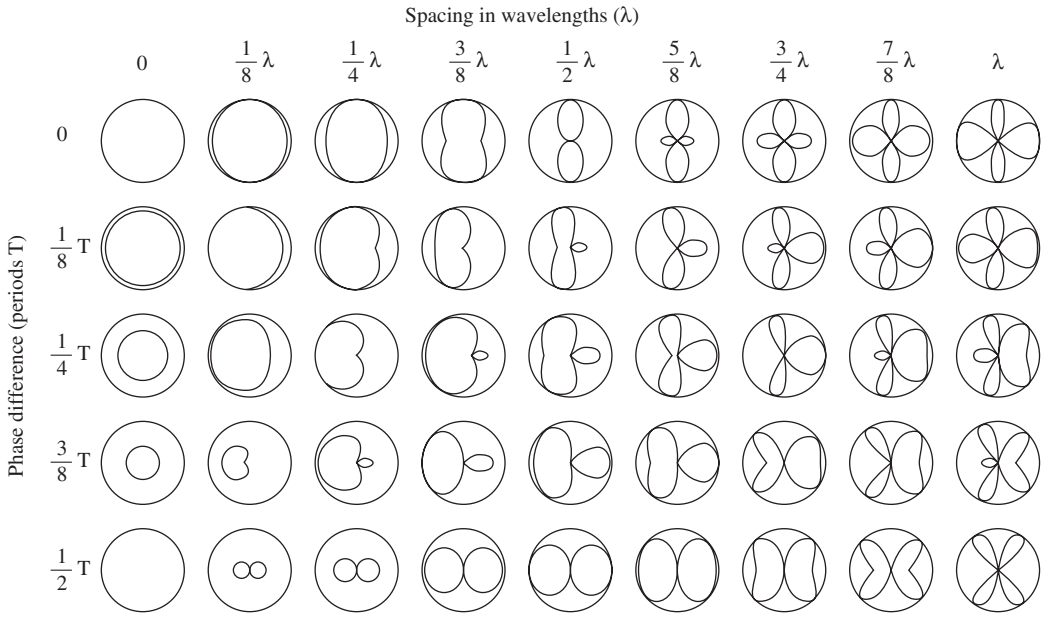


FIGURE 20 Phase-array antenna patterns. (From Henry Jaski, Ed., Antenna Engineering Handbook, 1961; courtesy of McGraw-Hill Book Company, New York.)

adjacent channel station or due to geographical population density patterns. For instance, it doesn't make sense for a New York City station to beam half of its energy to the Atlantic Ocean. By properly controlling the phase and power level into each of the towers, almost any radiation pattern desired can be obtained. Thus, the energy that would have been wasted over the Atlantic Ocean can be redirected to the areas of maximum population density.

**Phased Array**
combination of antennas in which there is control of the phase and power of the signal applied at each antenna resulting in a wide variety of possible radiation patterns

This arrangement is called a **phased array** because controlling the phase (and power) to each element results in a wide variety of possible radiation patterns. A station may easily change its pattern at sunrise and sunset because increased sky-wave coverage at night might interfere with a distant station operating at about the same frequency. To give an idea of the countless radiation patterns possible with a phased array, refer to Figure 20. It shows the radiation for just two λ/4 vertical antennas with variable spacing and input voltage phase. The patterns are simply the vector sum of the instantaneous field strength from each individual antenna.



## 7 Special-Purpose Antennas

### Log-Periodic Antenna

The log-periodic antenna is a special case of a driven array. It was first developed in 1957 and has proven so desirable that its many variations now make up an entire class of antennas. It provides reasonably good gain over an extremely wide range of frequencies. Therefore, it is useful for multiband transceiver operation and as a TV receiving

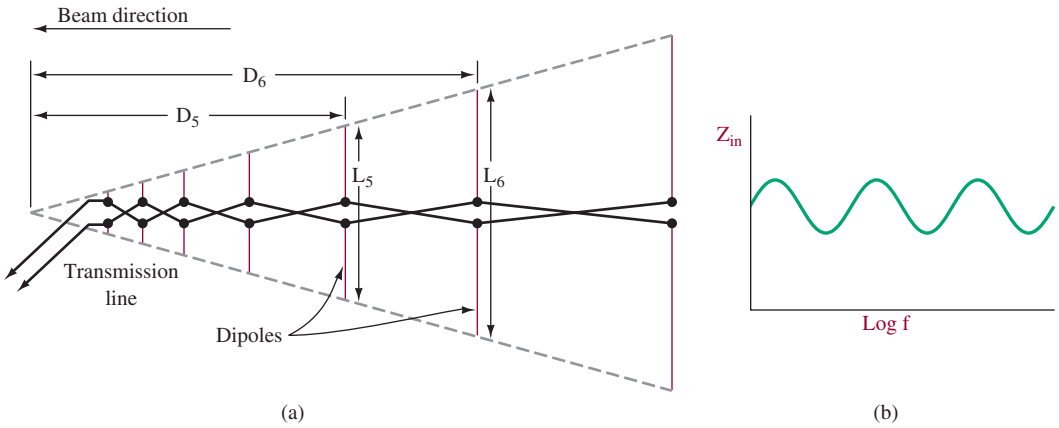


FIGURE 21 Log-periodic dipole array.

unit to cover the entire VHF and UHF bands. It can be termed a wide-bandwidth or broad-band antenna. Bandwidth is not to be confused with beamwidth in this situation.

Antenna *bandwidth* is defined with respect to its design frequency, often termed its *center frequency.* If a 100-MHz (center frequency) log-periodic antenna's transmitted or received power is 3 dB down at 50 MHz and 200 MHz, its bandwidth is 200 MHz − 50 MHz, or 150 MHz. This measurement is made in the direction of highest antenna directivity.

The most elementary form of log-periodic antenna is shown in Figure 21(a). It is termed a log-periodic dipole array and derives its name from the fact that its important characteristics are periodic with respect to the logarithm of frequency. This is true of its impedance, its SWR with a given feed line, and the strength of its radiation pattern. For instance, its input impedance is shown to be nearly constant (but periodic) as a function of the log of frequency in Figure 21(b).

The log-periodic array in Figure 21(a) consists of several dipoles of different lengths and spacings. The dipole lengths and spacings are related by

$$\frac{D_1}{D_2} = \frac{D_2}{D_3} = \frac{D_3}{D_4} = \frac{D_4}{D_5} \cdots = \tau = \frac{L_1}{L_2} = \frac{L_2}{L_3} = \frac{L_3}{L_4} = \frac{L_4}{L_5} \cdots \tag{6}$$

where $\tau$ is called the *design* ratio with a typical value of 0.7. The range of frequencies over which it is useful is determined by the frequencies at which the longest and shortest dipoles are a half-wavelength.

## Small-Loop Antenna

A loop antenna is a turn of wire whose dimensions are normally much smaller than $0.1\lambda$. When this condition exists, the current in it may all be considered in phase. This results in a magnetic field that is everywhere perpendicular to the loop. The resulting radiation pattern is sharply bidirectional, as indicated in Figure 22, and is effective over an extremely wide range of frequencies—those for which its

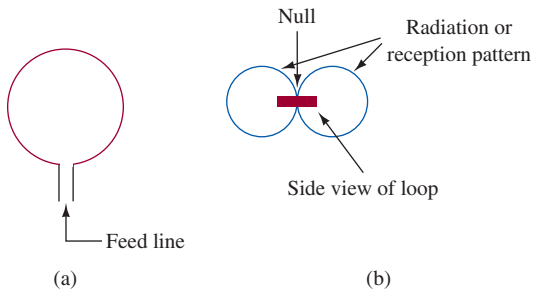


FIGURE 22 Loop antenna.

diameter is about $\lambda/16$ or less. The antenna is usually circular, but any shape is effective.

**Null**
a direction in space with minimal signal level

Because of its sharp **null** (see Figure 22), small size, and broad-band characteristics, the loop antenna's major application is in direction-finding (DF) applications. The goal is to determine the direction of some particular radiation. Generally, readings from two different locations are required due to the antenna's bidirectional pattern. If the two locations are far enough apart, the distance and direction of the radiation source can be calculated using trigonometry. Since the signal falls to zero much more sharply than it peaks, the nulls are used in the DF applications.

While other antennas with directional characteristics can be used in DF, the loop's small size seems to outweigh the gain advantages of larger directive antennas.

## Ferrite Loop Antenna

The familiar ferrite loop antenna found in most broadcast AM receivers is an extension of the basic loop antenna just discussed. The effect of using a large number of loops wound about a highly magnetic core (usually ferrite) serves to increase greatly the effective diameter of the loops. This forms a highly efficient receiving antenna, considering its small physical size compared to the hundreds of feet required to obtain a quarter-wavelength for the broadcast AM band. The directional characteristics of this antenna are verified by the fact that a portable AM receiver can usually be oriented to *null* out reception of a station. You should now be able to determine a line through which that broadcasting station exists when the null is detected.

## Folded Dipole Antenna

Recall that the standard half-wavelength dipole antenna has an input impedance of 73 Ω. Recall also that it becomes very inefficient whenever it is not used at the frequency for which its length equals $\lambda/2$ (i.e., it has a narrow bandwidth). The folded dipole antenna shown in Figure 23(a) offers the same radiation pattern as the standard half-wave dipole antenna but has an input impedance of 288 Ω (approximately $4 \times 73$ Ω) and offers relatively broad-band operation.

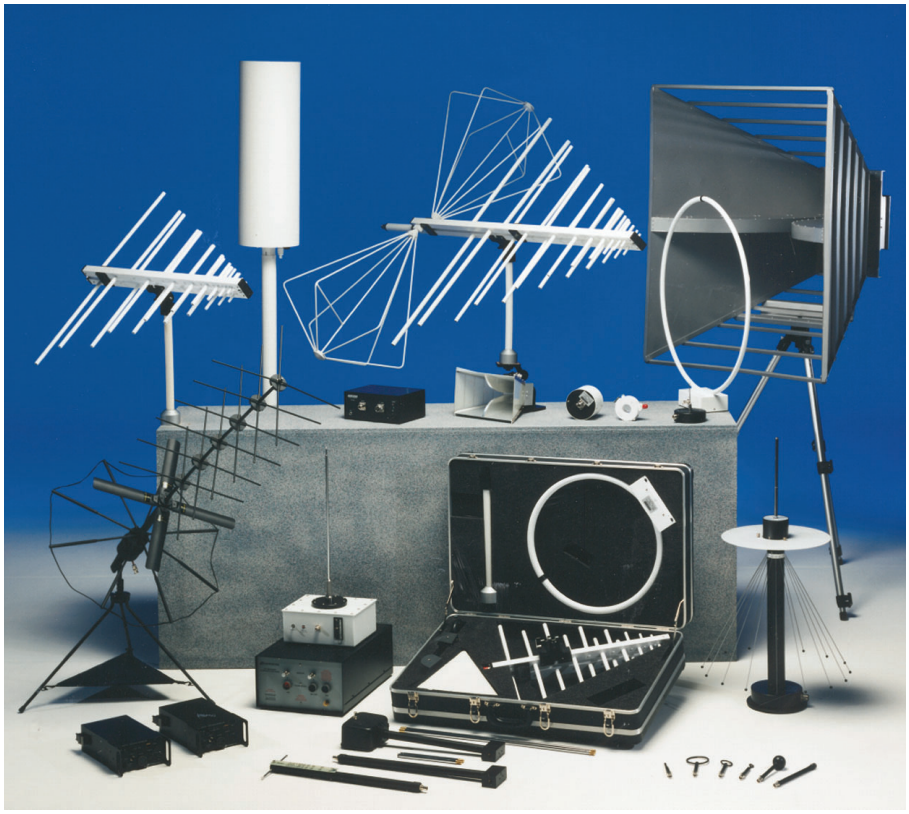

Various antennas available from one manufacturer. (Courtesy of Electro-Metrics, Inc.)

A standard half-wave dipole antenna can provide the same broad-band characteristics as the folded dipole by incorporating a parallel tank circuit, as shown in Figure 23(b). With the tank circuit resonant at the frequency corresponding to the antenna's $\lambda/2$ length, the tank presents a very high resistance in parallel with the antenna's 73 $\Omega$ and has no effect. However, as the frequency goes down, the antenna becomes capacitive, while the tank circuit becomes inductive. The net result is a resistive overall input impedance over a relatively wide frequency range.

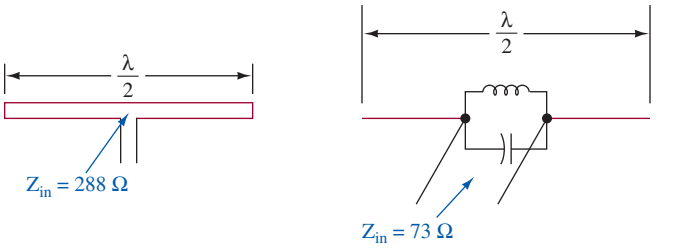


(a) Folded dipole (b) Impedance-bandwidth-compensated

FIGURE 23 Dipoles.

**Twin Lead**
standard 300-Ω parallel wire transmission line

The folded dipole is a useful receiving antenna for broadcast FM and for VHF TV. Its input impedance matches well with the 300-Ω input impedance terminals common to these receivers. It can be inexpensively fabricated by using a piece of standard 300-Ω parallel wire transmission line, commonly called **twin lead,** cut to $\lambda/2$ at midband and shorting together the two at each end. Folded dipoles are also invariably used as the driven element in Yagi–Uda antennas. This helps to maintain a reasonably high input impedance because the addition of each director lowers this array's input impedance. It also gives the antenna a broader band of operation.

In applications where a folded dipole with other than a 288-Ω impedance is desired, a larger-diameter wire for one length of the antenna is used. Impedances up to about 600 Ω are possible in this manner.

## Slot Antenna

Coupling RF energy into a slot in a large metallic plane can result in radiated energy with a pattern similar to a dipole antenna mounted over a reflecting surface. The length of the slot is typically one half-wavelength. These antennas function at UHF and microwave frequencies with energy coupled into the slot by waveguides or coaxial line feed connected directly across the short dimension of a rectangular slot. These antennas are commonly used in modern aircraft in an array module as shown in Figure 24(a). This 32-element (slot) array shows half the slots filled with dielectric material (to provide the required smooth airplane surface) and the others open to show the phase-shifting circuitry used to drive the slots. The rear view in Figure 24(b) shows the coaxial feed connectors used for this antenna array.

(a)

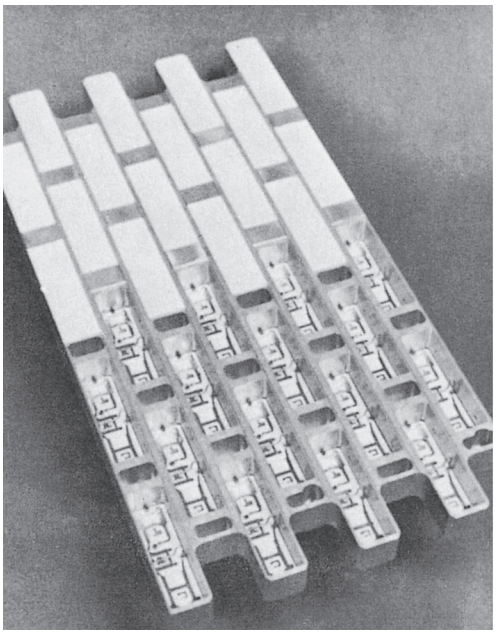

(b)

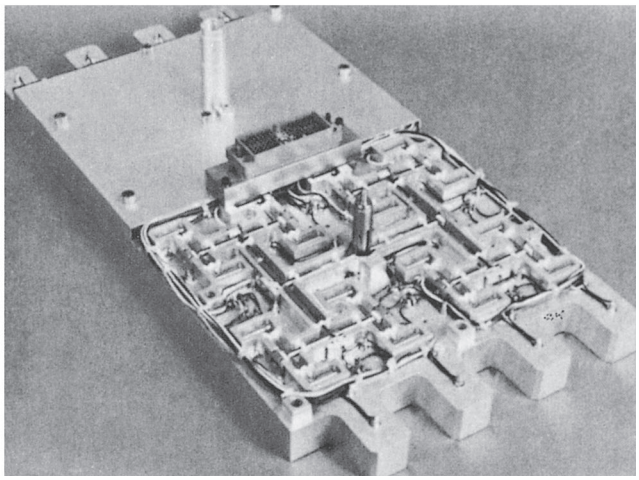

FIGURE 24 Slot antenna array.

The individual drive to each slot is controlled by phase-shifting networks. Proper phasing allows production of a directive radiation pattern that can be swept through a wide angle without physically moving the antenna. This allows a convenient mobile scanning radar system without mechanical complexities. These *phased array* antennas are typically built right into the wings of aircraft, with the dielectric window filling eliminating aerodynamic drag.



## 8 Troubleshooting

Antenna installation is often part of the technician's job. For the antenna to function at peak performance, technicians must follow proper installation techniques. Equipment manufacturers publish guidelines for antenna installation. This section discusses general installation procedures and looks at general troubleshooting techniques.

Often antennas are mounted high and are not easily accessible, making them difficult to inspect. The condition of the antenna and the transmission line can be determined, however, by measuring antenna emission and standing waves on the transmission line. In this section you will discover how some simple-to-use basic communications test equipment can check and troubleshoot the antenna systems.

After completing this section you should be able to:

- Identify safety precautions to observe for an antenna installation
- Describe proper antenna grounding
- Describe correct transmission line installation
- Troubleshoot typical antenna problems
- Explain the use of the SWR meter
- Explain how a grid-dip meter is used
- Describe how the SWR meter can help find antenna faults

### Installing the Antenna

TV and FM antenna installation practices will be referred to throughout this discussion. Installing TV and FM antennas portrays fairly standard practices that should be followed when doing any kind of communications antenna installation.

Never neglect safety. Standard operating procedure should always make safety first on the list of things to do. Locate power lines, telephone lines, and obstacles that can interfere with the installation or present a hazard to the installers. A tower structure requires a concrete base as the supporting structure. Guy wires need room for proper mounting. Anchor ladders securely. Use safety belts or harnesses whenever climbing towers or other structures. Be aware of building codes and follow installation procedures supplied by the equipment manufacturer. Heed the equipment manufacturer's warnings.

***Grounding and Lightning Protection*** Antennas on high exposed metal masts are subject to being struck by lightning. Ground the mast by connecting a wire to

it and to a ground rod. When the mast is struck by lightning, the surge of electricity is shorted to ground. Some antenna installations require several such ground connections. A typical ground wire size for a TV or FM antenna is 10 AWG. Local ordinances should specify wire size and type for grounding applications. A good grounding system also protects against static charge buildup.

Lightning follows a second path if a strike occurs. The second path is down the lead-in wire and into the equipment that is connected to it. To protect against this lightning, surge protectors and static discharge devices are placed between the antenna and the receiving equipment. Check the installation manual for recommended lightning surge protectors and static discharge devices.

***Planning the Installation*** An antenna installation site must be safe, as previously mentioned. Keep a proper distance from power lines and telephone lines. For good reception, no obstructions should exist between the antenna and the receiving direction. Generally, the antenna requires a base, a mast, and a good supporting structure. The base may be concrete with anchors for footing, as in a tower structure. The mast may be telescoping poles that are secured to a building or other structure.

If guy wires are used, there must be enough room around the mast to install them. Guy wires usually extend in three equally spaced directions. The wires should intercept the mast at about 45° angles for proper support. The guy wires must be well anchored at the ground points where they attach to eyelets. Anchor the eyelets in concrete. This makes a very secure guy wire support system. Tighten the guy wires using turnbuckles.

***Lead-in Wires*** Proper care should be exercised when running the lead-in line. Improper installation can result in troubles later. Lead-in wire should be kept as short as possible. Twin-lead 300-Ω antenna wire, often used with TV and FM antennas, must be installed using standoff insulators. This wire should never touch metal. The metal will influence the transmission line's characteristic impedance and cause attenuation and reflections. For areas of high interference, substitute coaxial cable for the twin-lead wire. Coaxial cable does not require insulated standoffs. Taping it to the mast and running it along rain gutters makes for a good installation.

When using coaxial cable instead of twin lead, remember that the antenna impedance must be matched to the transmission line. If the receiver does not permit direct connection of the coaxial cable, an impedance match must be made there also. Coaxial cable normally used with TV and FM antenna installation is RG-59/U. Its characteristic impedance is 75 Ω. Balun transformers match the antenna impedance and receiver input impedance, as illustrated in Figure 25. If the TV or FM receiver has a 75-Ω connection, then an antenna balun is all that is necessary.

Avoid running lead-in wires through windows. Run lines through a special tube that feeds the line into the building via the wall. Some installations may specify using conduit to protect the lead-in line from weathering. Once the line is in the building, distribution outlets can serve to distribute the signal to more than one receiver. If outlets are not used, cut off excess lead-in. Do not curl it up behind the receiving equipment.

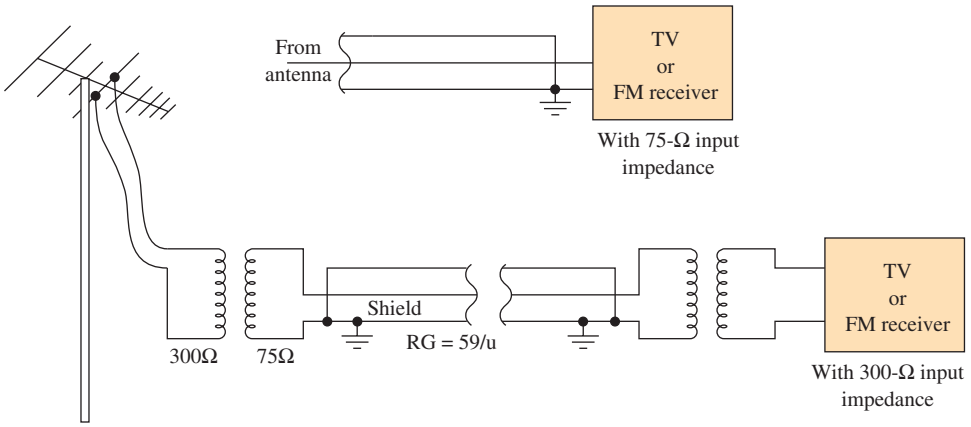


FIGURE 25 Matching antenna to receiver.

## Typical Troubleshooting Techniques

1. Is the VSWR as low as it should be? Most antennas are designed to operate with a specific type of transmission line; 50-Ω coax is common. A directional wattmeter can be used to measure VSWR, as shown in Figure 26.

   Sometimes the directional wattmeter takes the form of a directional coupler and a power meter, but the principle is the same. Measure the incident and reflected power and calculate the VSWR with the following formula:

$$\text{VSWR} = \frac{1 + \sqrt{\frac{P_r}{P_i}}}{1 - \sqrt{\frac{P_r}{P_i}}} \tag{7}$$

   where $P_i$ = incident power
   $P_r$ = reflected power

   Ideally, there is no reflected power and the VSWR is 1.
2. Assume you find a very high VSWR. A common ohmmeter is a very good piece of test equipment. Look for bad connections and open or shorted tuning elements such as capacitors and inductors.

   Another trick is to sweep the frequency to see if there is a frequency where the VSWR is low. This may lead you to broken elements or show that the design is improper.

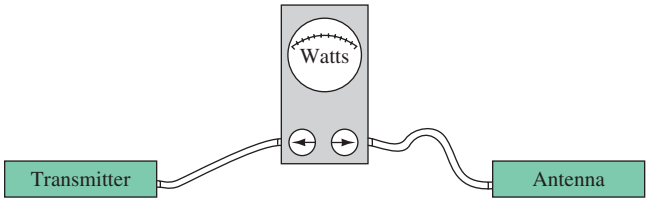


FIGURE 26 VSWR test.

If this antenna is associated with a transmitter, visually inspect all insulators for tracks made by arcs. These arcs may not show up in a low-power test. Attempts to repair such insulators are seldom successful. They should be replaced.

3. Has this antenna been subject to severe weather conditions such as ice, wind, and rain? Parts may be broken or full of water.
4. Is the antenna able to handle power applied to it? Antennas such as the Yagi–Uda and log-periodic have extremely high voltages at the ends of the elements. Corona will form and sometimes actually melt the ends of the antenna. If this occurs at an AM station, you can hear the audio on the arc. The problem is cured by adding rings or balls to the elements.
5. Are there installation problems? It is quite often a good idea to question physical dimensions if the antenna is new. People make mistakes during assembly that you can find with a tape measure.

   Consider a parabolic reflector used in a TV satellite system. With a tape measure and some string, you can find the focal point if you know the following formula:

$$\text{Focal length} = \frac{\text{diameter}^2}{16 \times \text{depth}} \tag{8}$$

Simply stretch the string across the dish and find the depth, measure the diameter, and solve for the focal length. Usually the face of the feed is at the focal point or a very small distance closer to the parabola. Refer to Figure 27.

## Antenna Measurements

Antenna performance predictions are based on free-space operation. Structures located around the antenna can severely affect the performance of the antenna. Building construction, tree growth, towers, and wires can alter the original antenna installation performance. In addition to changes in the area surrounding the antenna, characteristics of the antenna or the transmission line are subject to change over time. Remember, antenna efficiency relies on several factors. Antenna performance relies on electrical length, physical length, and matching the antenna impedance to that of the transmission line. All of these characteristics are subject to change due to storms, weathering, and mishaps.

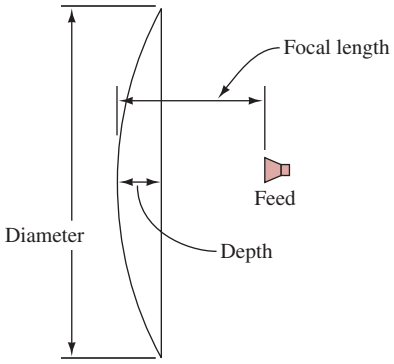


FIGURE 27 Parabolic reflector.

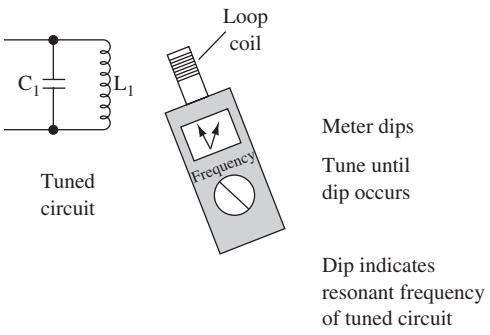


FIGURE 28 Grid-dip meter test for a tuned circuit.

***Grid-Dip Meter*** The **grid-dip meter** has been used for years to measure radio frequencies. It is a handheld device that can measure the resonant frequency of tuned circuits and antennas without power being applied to them. Battery-powered and equipped with a tunable oscillator and a scale calibrated in frequency, the meter can measure very accurately the frequency of tuned circuits. It is equipped with plug-in loop coils that serve as probes. The loop couples energy into or out of the grid-dip oscillator circuit. Tuned circuits are checked by bringing the loop coil near them and adjusting the grid-dip oscillator until a dip is seen on the meter (see Figure 28). The scale indicates the tuned circuit's resonant frequency when the dip occurs. A specific frequency is measured by choosing a loop coil for that desired frequency. The grid-dip meter comes with several such loop coils. Sometimes technicians construct their own coil to measure a specific frequency.

**Grid-Dip Meter**
device that measures the resonant frequency of tuned circuits and antennas without power being applied to them

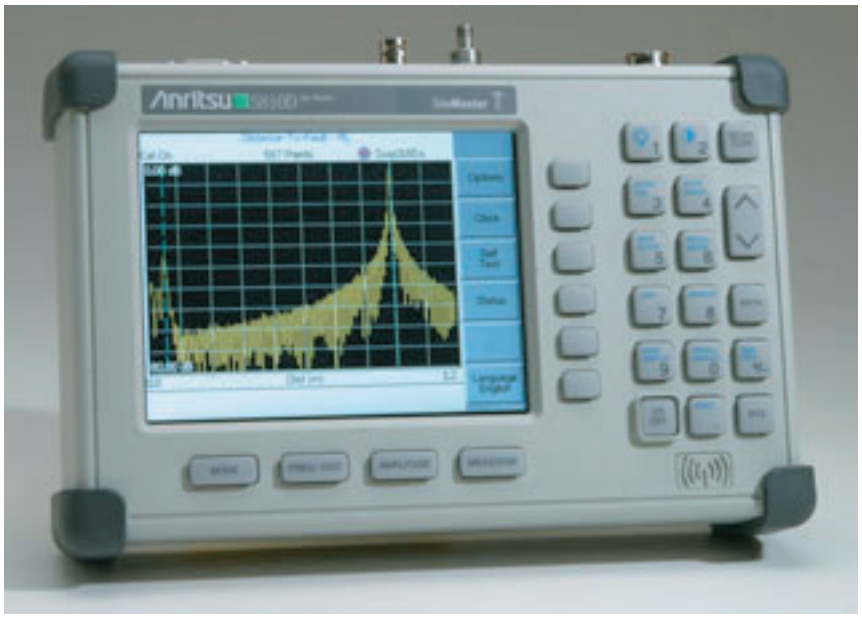


An Anritsu microwave transmission line and antenna analyzer. (Courtesy of Anritsu Company.)

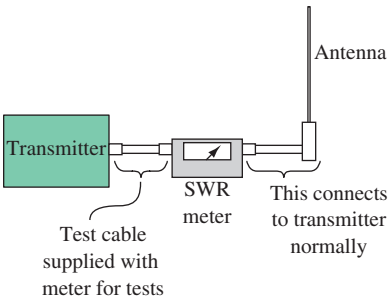


FIGURE 29 SWR meter in line between the antenna and transmitter.

The grid-dip meter can measure the resonant frequency of the antenna by connecting it directly to the antenna terminals. The grid-dip can also act as an absorption meter that measures radiated antenna energy. By bringing the meter's loop coil close to a radiating antenna and tuning the grid-dip meter for a peak meter indication, the radiating frequency can be determined. Field strength measurements can aid in determining the radiating pattern of the antenna. To do a field strength reading, take a position near the antenna and read the meter after carefully tuning for a peak reading on the scale. After several readings, the antenna radiating pattern can be plotted from the findings.

***SWR Meter*** Another very useful piece of test equipment is the SWR (standing wave ratio) meter. Figure 29 shows that the SWR meter is inserted between the transmitter and the antenna. A test cable is attached to the transmitter and to the SWR meter. On the antenna side of the SWR meter, connect the transmission line that normally runs from the transmitter to the antenna. An impedance mismatch at the antenna and the transmission line results in the existence of a voltage standing wave ratio (VSWR) on the transmission line. This test is similar to the one shown in Figure 26.

To measure VSWR with the SWR meter, first calibrate the meter. Follow the instructions supplied with the SWR meter regarding the calibration process. Once the meter is calibrated, switch the meter to the SWR setting to make a reading. A good SWR reading will indicate 1.5 or less. Impedance adjusting of the transmission line or the antenna can be done with the SWR meter in line between them. Changes can be made to the transmission line or the antenna until a minimum SWR reading is obtained. SWR meters can be equipped with an antenna probe to make field strength measurements. These readings are taken at different points around the radiating antenna, and a plot is made to establish the antenna pattern.

***Troubleshooting with the SWR Meter*** A high VSWR reading, greater than 1.5, on a transmission line indicates a problem. The problem may be from a crimped cable, a crushed cable, an impedance mismatch at the transmitter or antenna, or moisture in the cable. The antenna should be inspected if it is suspected of being faulty. If a problem exists in the transmission line, the coaxial cable should be tested. Use an ohmmeter to check the cable. Figure 30(a) illustrates how the cable should be tested. First, measure the resistance end-to-end from the metal outside portions of each connector. Then measure resistance from the connector's center pin to the other center pin. A small resistance reading indicates a good cable. A high resistance reading indicates an open cable. A cable continuity test can also determine the quality of the cable [see Figure 30(b)]. Short-circuit one end of the coaxial cable using a jumper

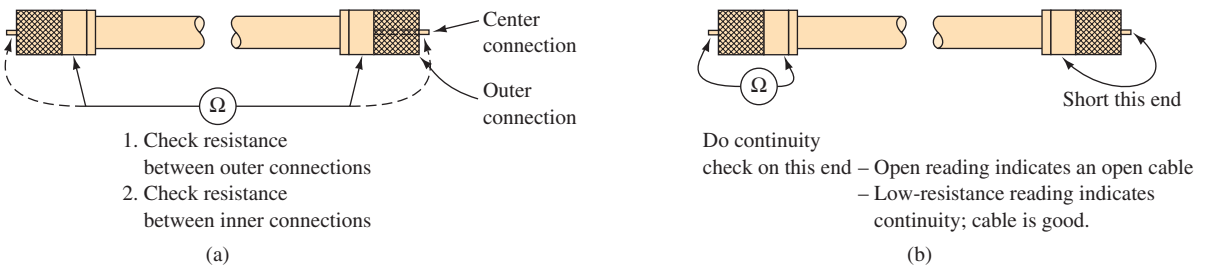


FIGURE 30 Testing coaxial cable.

wire while measuring from the other end. A high-resistance reading or open reading indicates an open cable.

*Anechoic Chamber* When precise measurement of an antenna's gain and directivity is necessary, an **anechoic chamber** is used. This is basically a large enclosed room that prevents any reflected electromagnetic waves and shields out any interfering waves from the outside world. If you look carefully at the anechoic chamber shown in Figure 31, you will see that the walls are lined with foam material. The foam has multiple pyramid shapes that are impregnated with carbon. This absorbs electromagnetic waves and prevents test data from being adversely affected by reflections. The foam and a grounded metallic enclosure for the chamber prevent any outside radiation from interfering with the testing. The size of the chamber is dictated by the antenna size and the wavelength. The test measurement "receiver" needs to be in the far field [see Equation (1)] so that the induction field (sometimes referred to as the near field) does not affect the desired radiation field (far field) readings.

**Anechoic Chamber**
a large enclosed room that prevents reflected electromagnetic waves and shields out interfering waves from the outside world; used for radiation measurements

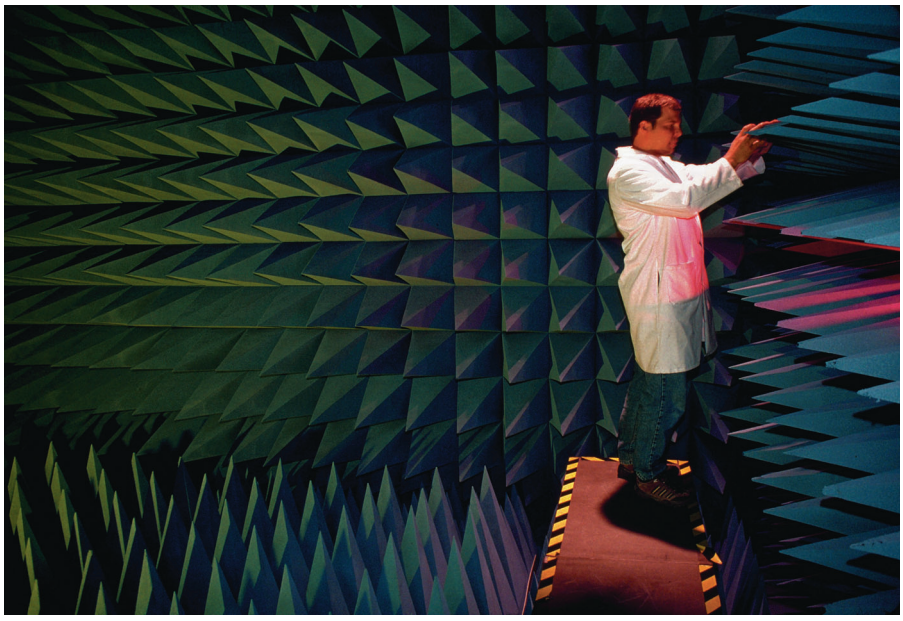

FIGURE 31 An anechoic chamber. (Courtesy Mark Gibson c/o Mira.)



# 9 TROUBLESHOOTING WITH ELECTRONICS WORKBENCH™ MULTISIM

The basic concepts of antennas were introduced in this chapter. A fundamental antenna that you should understand is the dipole. This exercise further investigates the half-wave dipole using the Multisim tools by incorporating the use of the network analyzer. Begin the exercise by opening **Fig14-32** at www.pearsoned.com/electronics. This circuit is shown in Figure 32.

This circuit contains a model of a 100-MHz half-wave dipole. This 100-MHz frequency is in the middle of the FM radio band. The operational characteristics of a half-wave dipole were discussed in Section 2. The 73-Ω resistor is used to model the radiation resistance of the dipole, whereas the 1-$\mu$H inductor and 2.5-pF capacitor were selected so that the resonant frequency of the antenna model is approximately 100 MHz. A network analyzer is connected to the model of the dipole for analyzing the antenna's characteristics.

Before you start the simulation, double-click on the network analyzer and click on the Simulation Set.. button at the bottom right of the Network Analyzer screen.You need to set the start and stop frequencies to 90 MHz and 110 MHz, respectively. You also need to change the number of points per decade to 500. Set the characteristic impedance of the network analyzer to 50 Ω. Click **OK** to close the **Measurement setup** window. What do you expect to see on the Smith chart when the simulation is performed? At the resonant frequency of 100 MHz, you should expect the plot of the antenna on the chart to show a real or resistive component of 73 Ω, whereas frequencies above and below 100 MHz will show that the dipole is reactive. Start the simulation and view the results. You should see a display similar to that shown in Figure 33. Use the slider to adjust the frequency to 100 MHz. In the example shown, the normalized input impedance is $Z_{11} = 1.46 \times j0.0354$ at 100.5177 MHz. Multiplying gives $1.46 \times 50 = 73$ Ω, which is the characteristic impedance of the half-wave dipole. The reactive term $j0.0354$ is nearly zero, as expected.

What would need to be done if a better impedance match were needed? The next example demonstrates how a single stub tuner can be used to provide a better

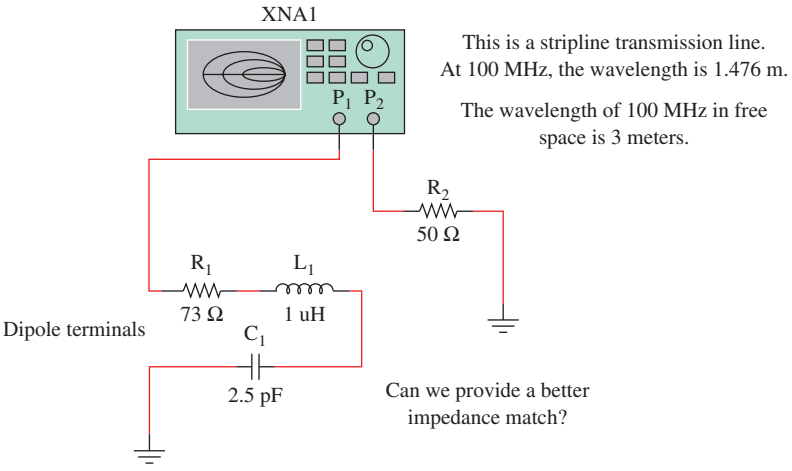


FIGURE 32 The Multisim circuit for modeling a 100-MHz half-wave dipole.

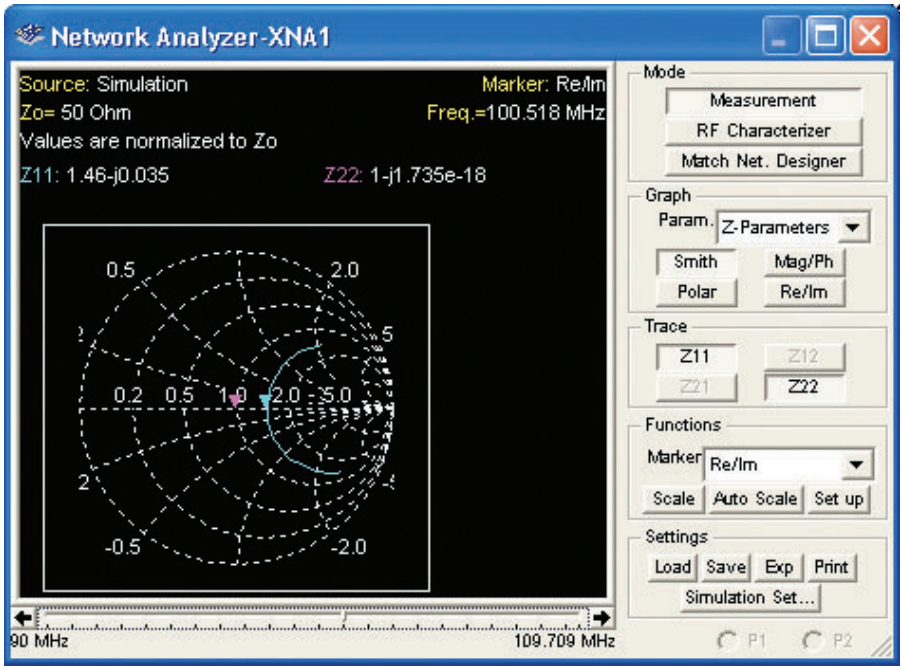


FIGURE 33 The network analyzer view of the simulation of a 100-MHz half-wave dipole.

impedance match to an antenna. Open the file **Fig14-34** at www.pearsoned.com/electronics. The dipole circuit previously analyzed has been modified to include a single stub tuner. The model of the transmission line is provided by the Multisim stripline transmission line element. The dielectric constant of the stripline is $\epsilon_r = 4.13$, which results in a wavelength of 1.476 meters at 100 MHz. The wavelength of 100 MHz in free space is 3 meters. The circuit is shown in Figure 34. You need to double-click on the network analyzer, change the frequency range to (90 to 110) MHz, and change the number of points per decade to 500 points to get a smooth plot.

In real applications, adjusting the stub tuner is a mechanical adjustment; however, in this exercise the adjustment is provided through varying the model characteristics of the transmission line. Double-click on the ground leg of the stub tuner. You should see a menu for the **strip_line.** Click on the **Value** tab and then click on **Edit Model.** You will see a screen image like the one in Figure 35. These are the model parameters for the stripline.

To begin the tuning, make a small change to the LEN value in the model. This change effectively changes the length of the stub tuner. Remember, the wavelength of 100 MHz in the stripline is 1.476 meters. Change the value to $3.0e^{-1}$; click on **Change Part Model** and then **OK** to save your changes. Restart the simulation and view the changes in the simulation results on the network analyzer. The result now shows a very inductive circuit at 100 MHz. You need to try the adjustment in the other direction. Once again, double-click on the ground leg of the stub tuner to obtain the menu for the **strip_line.** Click on the **Value** tab and then click on **Edit Model** to view the model parameters for the stripline. Change the LEN value to $3.5e^{-1}$. Restart the simulation and view the results on the network analyzer. The

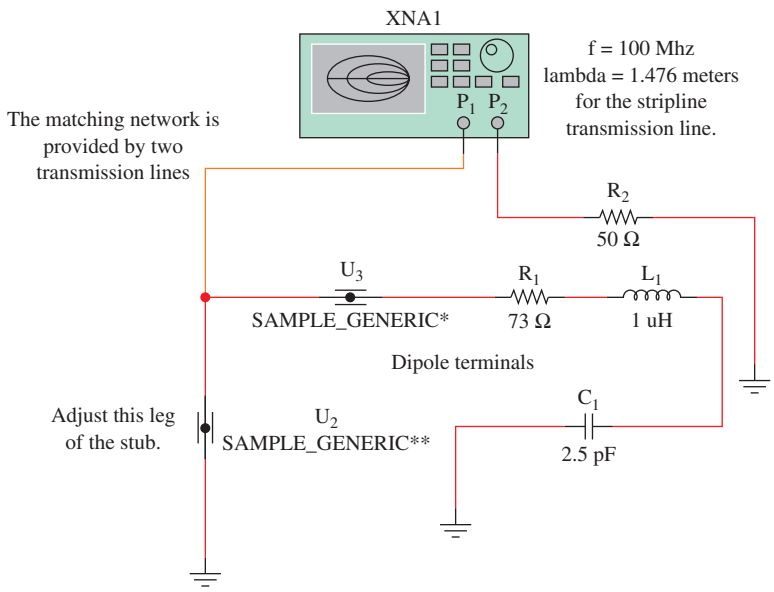


FIGURE 34 The model of a single stub tuner using the Multisim stripline transmission-line elements.

results show that we are getting closer to matching the antenna to a 50-Ω load. The tuning requires that this adjustment process be repeated several times until a satisfactory result is obtained. A LEN setting of $4.0e^{-1}$ for the ground leg provides a good match for the antenna. The exercises provide additional opportunities for you to experiment with dipole antennas.

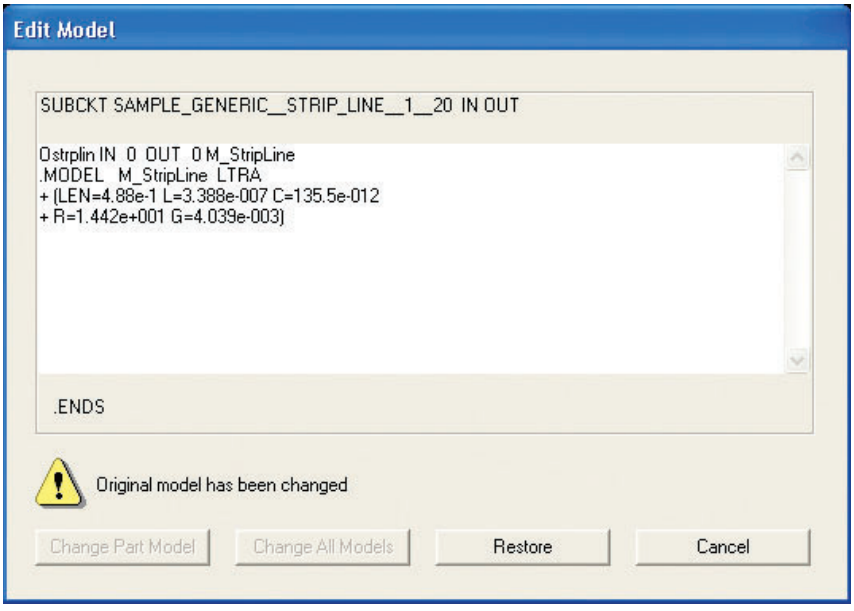


FIGURE 35 The model screen for the stripline element.

## Electronics Workbench™ Exercises

1. Design a half-wave 92-MHz dipole antenna. Use the file **Fig14-32.ms7 (.msm)** found at www.pearsoned.com/electronicsas a sample. This file is for a 100-MHz half-wave dipole. Modify the values for L1 and C1 so that the resonant frequency is 92 MHz. (L1 = 1.198 $\mu$H, C1 = 2.5 pF)
2. Design a half-wave 450-MHz dipole antenna. Use the file **Fig14-32.ms7 (.msm)** found at www.pearsoned.com/electronicsas a sample. This file is for a 100-MHz half-wave dipole. You must modify the values for L1 and C1 in this file so that the resonant frequency is 450 MHz. (L1 = 50 nH, C1 = 2.5 pF)
3. Open the Multisim simulation of a single stub tuner found in the **FigE14-1.ms7 (.msm)** file found at www.pearsoned.com/electronics. Use the technique presented in the text to provide a match for this 100-MHz dipole antenna.



## Summary

In this chapter we examined antenna operation and many of the possible configurations. Be sure to keep in mind that antenna properties apply identically when both transmitting and receiving—the principle of reciprocity. The major topics you should now understand include:

- the analysis of the half-wave dipole antenna, including its impedance, radiation field, radiation pattern, and gain
- the definition of radiation resistance and related calculations
- the description of antenna feed lines, including resonant and nonresonant
- the operation of impedance matching devices, including the delta match and quarter-wave matching transformer
- the analysis of monopole antennas, including ground effects, counterpoise effects, radiation pattern, and loading effects
- the effects of parasitic elements, including discussion of the Yagi–Uda antenna, driven collinear array, broadside array, and vertical array
- the description and operation of various special-purpose antennas, including the log-periodic, loop, ferrite loop, folding dipole, and slot antennas



## Questions and Problems

### Section 1

*1. How should a transmitting antenna be designed if a vertically polarized wave is to be radiated, and how should the receiving antenna be designed for best performance in receiving the ground wave from this transmitting antenna?
*2. If a field intensity of 25 mV/m develops 2.7 V in a certain antenna, what is its effective height? (108 m)
*3. If the power of a 500-kHz transmitter is increased from 150 W to 300 W, what would be the percentage change in field intensity at a given distance from the transmitter? What would be the decibel change in field intensity? (141%, 3 dB)

*An asterisk preceding a number indicates a question that has been provided by the FCC as a study aid for licensing examinations.



*4. If a 500-kHz transmitter of constant power produces a field strength of 100 $\mu$V/m at a distance of 100 mi from the transmitter, what would be the theoretical field strength at a distance of 200 mi from the transmitter? (50 $\mu$V/m)
*5. If the antenna current at a 500-kHz transmitter is reduced 50 percent, what would be the percentage change in the field intensity at the receiving point? (50%)
*6. Define *field intensity*. Explain how it is measured.
*7. Define *polarization* as it refers to broadcast antennas.
8. Explain how antenna reciprocity occurs.

## Section 2

9. Explain the development of a half-wave dipole antenna from a quarter-wavelength, open-circuited transmission line.
*10. Draw a diagram showing how current varies along a half-wavelength dipole antenna.
*11. Explain the voltage and current relationships in a one-wavelength antenna, one half-wavelength (dipole) antenna, and one quarter-wavelength *grounded* antenna.
*12. What effect does the magnitude of the voltage and current at a point on a half-wave antenna in *free space* (a dipole) have on the impedance at that point?
*13. Can either of the two fields that emanate from an antenna produce an EMF in a receiving antenna? If so, how?
14. Draw the three-dimensional radiation pattern for the half-wave dipole antenna, and explain how it is developed.
15. Define antenna *beamwidth*.
*16. What is the effective radiated power of a television broadcast station if the output of the transmitter is 1000 W, antenna transmission line loss is 50 W, and the antenna power gain is 3? (2850 W)
17. A $\lambda/2$ dipole is driven with a 5-W signal at 225 MHz. A receiving dipole 100 km away is aligned so that its gain is cut in half. Calculate the received power and voltage into a 73-$\Omega$ receiver. (7.57 pW, 23.5 $\mu$V)
18. An antenna with a gain of 4.7 dBi is being compared with one having a gain of 2.6 dBd. Which has the greater gain?
19. Explain why a monopole antenna is used below 2 MHz.
20. Explain what is meant by half-wave dipole. Calculate the length of a 100-MHz $\frac{2}{3}\lambda$ antenna.
21. Determine the distance from a $\lambda/2$ dipole to the boundary of the far-field region if the $\lambda/2$ dipole is being used in the transmission of a 90.7-MHz FM broadcast band signal. ($R = 1.653$ m)
22. Determine the distance from a parabolic reflector of diameter $D = 10$ m to the boundary of the far-field region. The antenna is being used to transmit a 4.1-GHz signal. ($R = 2733.3$ m)
23. Define *near* and *far fields*.

## Section 3

24. Define *radiation resistance* and explain its significance.
*25. The ammeter connected at the base of a vertical antenna has a certain reading. If this reading is increased 2.77 times, what is the increase in output power? (7.67)
26. How is the operating power of an AM transmitter determined using antenna resistance and antenna current?

27. Explain what happens to an antenna's radiation resistance as its length is continuously increased.
28. Explain the effect that ground has on an antenna.
29. Calculate the efficiency of an antenna that has a radiation resistance of 73 Ω and an effective dissipation resistance of 5 Ω. What factors could enter into the dissipation resistance? (93.6%)
*30. Explain the following terms with respect to antennas (transmission or reception):
    (a) Physical length.
    (b) Electrical length.
    (c) Polarization.
    (d) Diversity reception.
    (e) Corona discharge.
31. What is the relationship between the electrical and physical length of a half-wave dipole antenna?
*32. What factors determine the resonant frequency of any particular antenna?
*33. If a vertical antenna is 405 ft high and is operated at 1250 kHz, what is its physical height expressed in wavelengths? (0.54λ)
*34. What must be the height of a vertical radiator one half-wavelength high if the operating frequency is 1100 kHz? (136 m)

## Section 4

35. What is an antenna feed line? Explain the use of resonant antenna feed lines, including advantages and disadvantages.
36. What is a nonresonant antenna feed line? Explain its advantages and disadvantages.
37. Explain the operation of a delta match. Under what conditions is it a convenient matching system?
*38. Draw a simple schematic diagram of a push-pull, neutralized radio-frequency amplifier stage, coupled to a vertical antenna system.
*39. Show by a diagram how a two-wire radio-frequency transmission line may be connected to feed a half-wave dipole antenna.
*40. Calculate the characteristic impedance of a quarter-wavelength section used to connect a 300-Ω antenna to a 75-Ω line. (150 Ω)
41. Explain how delta matching is accomplished.

## Section 5

*42. Which type of antenna has a minimum of directional characteristics in the horizontal plane?
*43. If the resistance and the current at the base of a monopole antenna are known, what formula can be used to determine the power in the antenna?
*44. What is the difference between a half-wave dipole and a monopole antenna?
*45. Draw a sketch and discuss the horizontal and vertical radiation patterns of a quarter-wave monopole antenna. Would this also apply to a similar type of receiving antenna?
46. What is an image antenna? Explain its relationship to the monopole antenna.
*47. What would constitute the ground plane if a quarter-wave grounded (whip) antenna, 1 m in length, were mounted on the metal roof of an automobile? Mounted near the rear bumper of an automobile?



*48. What is the importance of the ground radials associated with standard broadcast antennas? What is likely to be the result of a large number of such radials becoming broken or seriously corroded?
*49. What is the effect on the resonant frequency of connecting an inductor in series with an antenna?
*50. What is the effect on the resonant frequency of adding a capacitor in series with an antenna?
*51. If you desire to operate on a frequency lower than the resonant frequency of an available monopole antenna, how may this be accomplished?
*52. What is the effect on the resonant frequency if the physical length of a $\lambda/2$ dipole antenna is reduced?
*53. Why do some standard broadcast stations use top-loaded antennas?
*54. Explain why a *loading coil* is sometimes associated with an antenna. Under this condition, would absence of the coil mean a capacitive antenna impedance?

## Section 6

55. Explain how the directional capabilities of the elementary antenna array shown in Figure 16 are developed.
56. Define the following terms:
    (a) Driven elements.
    (b) Parasitic elements.
    (c) Reflector.
    (d) Director.
57. Calculate the ERP from a Yagi–Uda antenna (illustrated in Figure 17) driven with 500 W. (2500 W)
58. Calculate the *F*/*B* ratio for an antenna with
    (a) Forward gain of 7 dB and reverse gain of −3 dB.
    (b) Forward gain of 18 dB and reverse gain of 5 dB.
59. Sketch a Yagi–Uda configuration.
60. Describe the physical configuration of a collinear array. What is the effect of adding more elements to this antenna?
61. Describe the physical configuration of a broadside array. Explain the major advantage they have compared to collinear arrays.
*62. What is the direction of maximum radiation from two vertical antennas spaced $\lambda/2$ and having equal currents in phase?
*63. How does a directional antenna array at an AM broadcast station reduce radiation in some directions and increase it in other directions?
*64. What factors can cause the directional pattern of an AM station to change?
65. Define *phased array.*
66. Explain how a parasitic array can be developed.

## Section 7

67. Describe the major characteristics of a log-periodic antenna. What explains its widespread use? Explain the significance of its shortest and longest elements.
*68. Describe the directional characteristics of the following types of antennas:
    (a) Horizontal half-wave dipole antenna.
    (b) Vertical half-wave dipole antenna.
    (c) Vertical loop antenna.

(d) Horizontal loop antenna.
(e) Monopole antenna.

*69. What is the directional reception pattern of a loop antenna?

70. What is a ferrite loop antenna? Explain its application and advantages.

71. What is the radiation resistance of a standard folded dipole? What are its advantages over a standard dipole? Why is it usually used as the driven element for Yagi–Uda antennas instead of the half-wave dipole antenna?

72. Describe the operation of a slot antenna and its application with aircraft in a driven array format.

73. An antenna has a maximum forward gain of 14 dB at its 108-MHz center frequency. Its reverse gain is −8 dB. Its beamwidth is 36° and the bandwidth extends from 55 to 185 MHz. Calculate:
(a) Gain at 18° from maximum forward gain. (11 dB)
(b) Bandwidth. (130 MHz)
(c) *F*/*B* ratio. (22 dB)
(d) Maximum gain at 185 MHz. (11 dB)

74. Explain the difference between antenna beamwidth and bandwidth.

## Section 8

75. Explain VSWR and tell why it is important in troubleshooting antenna problems.

76. Explain how to proceed in troubleshooting the antenna to determine causes of transmission problems.

77. Describe how to use a grid-dip meter, and give examples of where it is most commonly used.

78. What is an SWR meter and how is it used in troubleshooting?

79. Explain what happens when the VSWR is too high.

80. What is an anechoic chamber? Explain what factors to consider with respect to its size requirements.

## Questions for Critical Thinking

*81. A ship radio-telephone transmitter operates on 2738 kHz. At a distant point from the transmitter, the 2738-kHz signal has a measured field of 147 mV/m. The second harmonic field at the same point is measured as 405 $\mu$V/m. How much has the harmonic emission been attenuated below the 2738-kHz fundamental? (51.2 dB)

*82. You are asked to calculate effective radiated power. What data do you need to collect and how do you perform the calculation?

83. Design a log-periodic antenna to cover the complete VHF TV band. Use a design factor ($\tau$) of 0.7, and provide a scaled sketch of the antenna with all dimensions indicated.

84. A loop antenna used for DF purposes detects a null from a signal with the loop rotated 35° CCW from a line of latitude. When the antenna is moved 3 mi west along the same line of latitude, it detects a null from the same signal source when rotated 45° CW from the line of latitude. You have been asked to identify the exact location of the signal source with respect to the two points when readings were taken. Provide this information. (You may use a sketch.)

*This page intentionally left blank*

# WAVEGUIDES AND RADAR

From *Modern Electronic Communication*, Ninth Edition, Jeffrey S. Beasley, Gary M. Miller. Copyright © 2008 by Pearson Education, Inc. Published by Prentice Hall. All rights reserved.

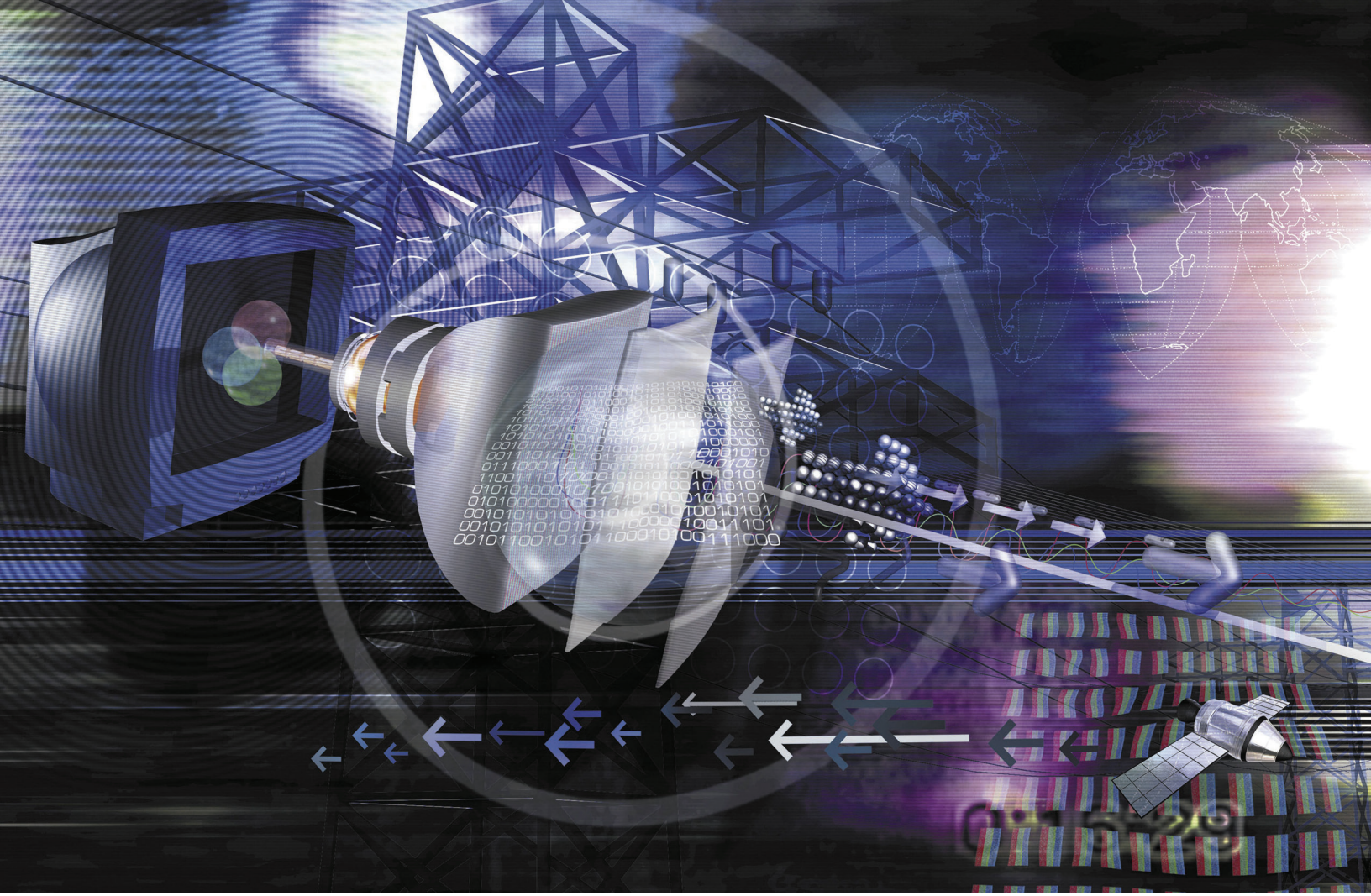

## Chapter Outline

1 Comparison of Transmission Systems
2 Types of Waveguides
3 Physical Picture of Waveguide Propagation
4 Other Types of Waveguides
5 Other Waveguide Considerations
6 Termination and Attenuation
7 Directional Coupler
8 Coupling Waveguide Energy and Cavity Resonators
9 Radar
10 RFID-Radio Frequency Identification
11 Microintegrated Circuit Waveguiding
12 Troubleshooting
13 Troubleshooting with Electronics Workbench™ Multisim

## Objectives

- Differentiate among sending signals on transmission lines, antennas, and waveguides based on power and distance
- Describe basic modes of operation for rectangular waveguides
- Calculate the cutoff wavelength for the dominant mode of operation
- Provide a physical picture of waveguide propagation, including the concepts of guide wavelength and velocity
- Describe other types of waveguides including circular, ridged, flexible, bends, twists, tees, tuners, terminations, attenuators, and directional couples
- Explain three methods for coupling energy into or out of a waveguide and the uses for cavity resonators
- Calculate an object's velocity when using a Doppler radar system
- Calculate the characteristic impedance for microstrip and stripline

# WAVEGUIDES AND RADAR



An L3 ESSCO communications radome. (Photo courtesy of L-3 Communications, ESSCO. www.L-3com.com.ESSCO.)

## Key Terms

waveguide
characteristic wave impedance
vane
radar
echo signal
pulse repetition frequency (PRF)
pulse repetition rate (PRR)
pulse repetition time (PRT)
rest time
receiver time
radar mile
second return echoes
maximum usable range
double range echoes
peak power
duty cycle
Doppler effect
stripline
microstrip
dielectric waveguide



# 1 Comparison of Transmission Systems

The mode of energy transmission chosen for a given application normally depends on the following factors: (1) initial cost and long-term maintenance, (2) frequency band to be used and its information-carrying capacity, (3) selectivity or privacy offered, (4) reliability and noise characteristics, and (5) power level and efficiency. Naturally, any one mode of energy transmission has only some of the desirable features. It therefore becomes a matter of sound technical judgment when choosing the mode of energy transmission best suited for a particular application.

Transmission lines, antennas, and fiber optics are the more commonly known means of high-frequency transmission, but waveguides also play an important role. The following examples show that each method of transmission has its proper place.

It is desired to transmit a 1-GHz signal between two points 30 mi apart. If the received energy in each case were chosen to be 1 nW ($10^{-9}$ W), then for comparison it would be found that for reasonably typical installations, the required *transmitted* power would be on the order of

1. *Transmission lines:* $10^{1500}$ nW (15,000-dB loss)
2. *Waveguides:* $10^{150}$ nW (1500-dB loss)
3. *Antennas:* 100 mW (80-dB loss)

Clearly, the transmission of energy without any electrical conductors (antennas) exceeds the efficiency of waveguides and transmission lines by many orders of magnitude.

If the transmission path length of the preceding example were shortened by a factor of 100:1, to a distance of 1500 ft, the comparison becomes

1. *Transmission lines:* 1 MW (150-dB loss)
2. *Waveguides:* 30 nW (15-dB loss)
3. *Antennas:* 10 $\mu$W (40-dB loss)

Quite clearly the waveguide now surpasses either the transmission line or antenna for efficiency of energy transfer.

A comparison of the energy input required versus distance to obtain a received power of 1 nW for these three modes of energy transmission is shown in Figure 1. The frequency is 1 GHz, and the results are expressed on a decibel scale with a 0-dB reference at the required receiver power level of 1 nW. The dashed section of the antenna curve, somewhat beyond 30 mi, indicates that the attenuation becomes severe beyond the line-of-sight distance, which is typically 50 mi.

One final comparison, and then a specific look at waveguides. Transmission of energy down to zero frequency is practical with transmission lines, but waveguides, antennas, and fiber optics inherently have a practical low-frequency limit. In the case of antennas, this limit is about 100 kHz, and for waveguides, it is about 300 MHz. Fiber-optic transmissions take place at the frequency of light, or greater than $10^{14}$ Hz! Theoretically the antennas and waveguides could be made to work at arbitrarily low frequencies, but the physical sizes required would become excessively large. However, with the low gravity and lack of atmosphere on the moon, it may be feasible to have an antenna 10 mi high and 100 mi long for

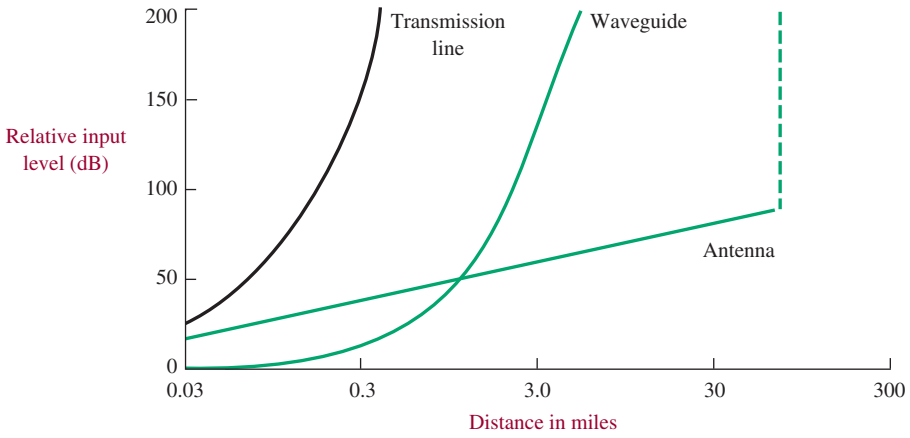


**FIGURE 1** Input power required versus distance for fixed receiver power.

frequencies as low as a few hundred cycles per second. As an indication of the sizes involved, it may be noted that for either waveguides or antennas, the important dimension is normally a half-wavelength. Thus, a waveguide for a 300-MHz signal would be about the size of a roadway drainage culvert, and an antenna for 300 MHz would be about $1\frac{1}{2}$ ft long.



## 2 Types of Waveguides

Any surface separating two media of distinctly different conductivities or permitivities has a guiding effect on electromagnetic waves. For example, a rod of dielectric material, such as polystyrene, can carry a high-frequency wave, somewhat as a glass fiber conducts a beam of light. These phenomena will be further explored in Section 10. The best guiding surface, however, is that between a good dielectric and a good conductor.

In a broad sense, all kinds of transmission lines, including coaxial cables and parallel wires, are waveguides. In practice, however, the term **waveguide** has come to signify a hollow metal tube or pipe used to conduct electromagnetic waves through its interior. They were first used extensively in radar sets during World War II, operating at wavelengths of between 10 and 3 cm. They are commonly called *plumbing* in the trade.

**Waveguide**
a microwave transmission line consisting of a hollow metal tube or pipe that conducts electromagnetic waves through its interior

A waveguide can be almost any shape. The most popular shape is rectangular, but circular and even more exotic shapes are used. We shall mainly study the rectangular waveguide operating in the $TE_{10}$ mode. We shall learn more about this terminology shortly.

Like coaxial lines, waveguides are perfectly shielded—hence, no radiation loss. The attenuation of a hollow pipe is less, and the power capacity is greater, than that of a coaxial line of the same size at the same frequency. Most of the copper loss of a coaxial line occurs in the thin inner conductor; hence, its elimination in a waveguide reduces attenuation and increases the power capacity. It also simplifies the construction and makes the line more rugged.

## Waveguide Operation

A rigorous mathematical demonstration of waveguide operation is beyond our intentions. A practical explanation is possible by starting out with a normal two-wire transmission line. A quarter-wavelength shorted stub looks like an open circuit and in fact is often used as an insulating support for transmission lines. If an infinite number of these supports were added both above and below the two-wire transmission line, as shown in Figure 2, you can visualize it turning into a rectangular waveguide. If the shorted stubs were less than a quarter-wavelength, operation would be drastically impaired. The same is true of a rectangular waveguide. The *a* dimension of a waveguide, shown in Figure 3, must be at least a half-wavelength at the operating frequency, and the *b* dimension is normally about one-half the *a* dimension.

The wave that is propagated by a waveguide is electromagnetic and, therefore, has electric (*E* field) and magnetic (*H* field) components. In other words, energy propagates down a waveguide in the form of a radio signal. The configuration of these two fields determines the mode of operation. If no component of the *E* field is in the direction of propagation, we say that it is in the TE mode. TE is the abbreviation for transverse electric. *Transverse* means "at right angles." TM is the mode of waveguide operation whereby the magnetic field has no component in the direction of propagation. Two-number subscripts normally follow the TE or TM designations, and they can be interpreted as follows: For TE modes, the first subscript is the number of one half-wavelength *E*-field patterns along the *a* (longest) dimension, and the second subscript is the number of one half-wavelength *E*-field patterns along the *b* dimension. For TM modes, the number of one half-wavelength

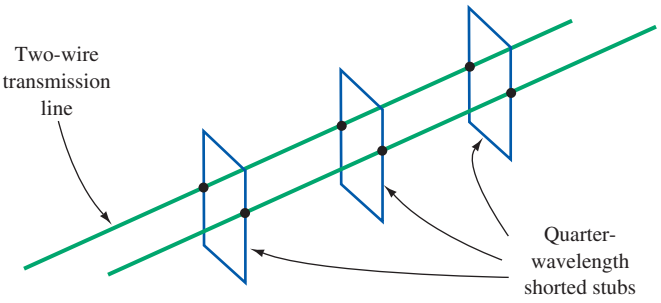


FIGURE 2 Transforming a transmission line into a waveguide.

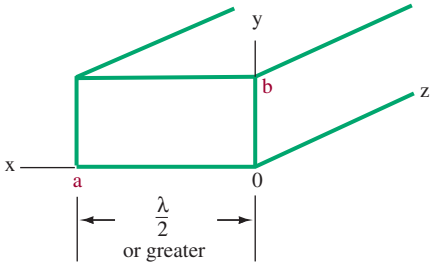


FIGURE 3 Waveguide dimension designation.

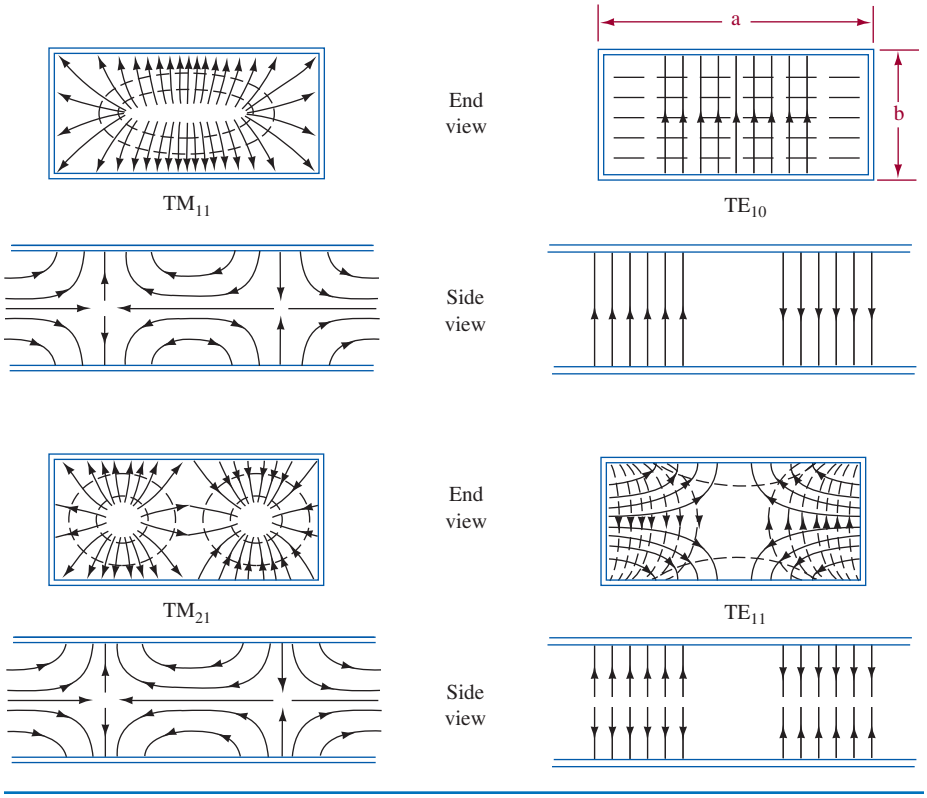


FIGURE 4 Examples of modes of operation in rectangular waveguides.

*H* fields along the *a* and *b* dimensions determine the subscripts. Refer to Figure 4 for further illustration of this process.

The electric field is shown with solid lines, and the magnetic field is shown with dashed lines. Notice the end view for the $TE_{10}$ mode in Figure 4. The electric field goes from a minimum at the ends along the *a* dimension to a maximum at the center. This is equivalent to one half-wavelength of *E* field along the *a* dimension, while no component exists along the *b* dimension. This is, therefore, called the $TE_{10}$ mode of operation. In the $TM_{21}$ mode of operation, note that along the *a* dimension the *H* field (dashed lines) goes from zero to maximum to zero to maximum to zero. That's two half-wavelengths. Along the *b* dimension, one half-wavelength of the *H* field occurs—thus the $TM_{21}$ designation. Note that in the side views, the *H* fields (dashed lines) are not shown for the sake of simplicity. In these side views, the TE modes have no *E* field in the direction of propagation (right to left or left to right), while in the TM modes the *E* field (solid lines) does exist in the propagation direction.

## Dominant Mode of Operation

The $TE_{10}$ mode of operation is called the dominant mode because it is the most "natural" one for operation. A waveguide is often thought of as a high-pass filter because only very high frequencies can be propagated. The $TE_{10}$ mode has the lowest cutoff frequency of any of the possible modes of propagation, including both

TM and TE types. It is of special interest because there will exist a frequency range between its cutoff frequency ($f_c$, the lowest frequency that a given waveguide propagates) and that of the next higher-order mode in which this is the only possible mode of transmission. Thus, if a waveguide is excited within this frequency range, energy propagation must take place in the dominant mode, regardless of the way in which the guide is excited. Control of the mode of operation is important in any practical transmission system, and thus the $TE_{10}$ mode has a distinct advantage over the other possible modes in a rectangular waveguide. Even more important, however, is the fact that $TE_{10}$ operation allows use of the physically smallest waveguide for a given frequency of operation.

The dimensions for an RG-52/U waveguide are 0.9 × 0.4 in. This is one of the standard sizes used in the X-band frequency range and is usually called the X-band waveguide. The recommended frequency range for this waveguide size is 8.2 to 12.4 GHz. As a result of this limited range of usefulness, standard sizes of waveguides have been established, each having a specified frequency range. Table 1 provides the frequency range and size of the various waveguide bands.

The formula for cutoff wavelength is

$$\lambda_{co} = 2a \tag{1}$$

for the $TE_{10}$ mode, where $a$ is the long dimension of the waveguide rectangle. Thus, for an RG-52/U waveguide, $\lambda_{co}$ is 2(0.9) or 1.8 in., or 4.56 cm. Therefore,

$$f_{co} = \frac{c}{\lambda_{co}} = \frac{3 \times 10^{10}\ \text{cm/s}}{4.56\ \text{cm}} = 6.56\ \text{GHz} \tag{2}$$

The lowest frequency of propagation (without considerable attenuation) is 6.56 GHz, but the recommended range is 8.2 to 12.4 GHz. The next higher-order mode is the $TE_{20}$, which has a cutoff frequency of 13.1 GHz. Thus, within the frequency range from 6.56 to 13.1 GHz, only the $TE_{10}$ mode can propagate within the X-band waveguide, in the ordinary sense of the word.

**Table 1** Waveguide Bands/Sizes

| Band | Frequency Range in GHz | Type | Size of Waveguide | |
|---|---|---|---|---|
| | | | in. | cm |
| L | 1.12–1.7 | WR650 | 6.5 × 3.25 | 16.5 × 8.26 |
| S | 1.7–2.6 | WR430 | 4.3 × 2.15 | 10.9 × 8.6 |
| S | 2.6–3.95 | WR284 | 2.84 × 1.34 | 7.21 × 3.40 |
| G | 3.95–5.85 | WR187 | 1.87 × 0.87 | 4.75 × 2.21 |
| C | 4.9–7.05 | WR159 | 1.59 × 0.795 | 4.04 × 2.02 |
| J | 5.85–8.2 | WR137 | 1.37 × 0.62 | 3.48 × 1.57 |
| H | 7.05–10.0 | WR112 | 1.12 × 0.497 | 2.84 × 1.26 |
| X | 8.2–12.4 | WR90 | 0.9 × 0.4 | 2.29 × 1.02 |
| M | 10.0–15.0 | WR75 | 0.75 × 0.375 | 1.91 × 0.95 |
| P | 12.4–18.0 | WR62 | 0.62 × 0.31 | 1.57 × 0.79 |
| N | 15.0–22.0 | WR51 | 0.51 × 0.255 | 1.30 × 0.65 |
| K | 18.0–26.5 | WR42 | 0.42 × 0.17 | 1.07 × 0.43 |
| R | 26.5–40.0 | WR28 | 0.28 × 0.14 | 0.71 × 0.36 |

*Note:* WR = waveguide rectangular



## 3 PHYSICAL PICTURE OF WAVEGUIDE PROPAGATION

For a wave to exist in a waveguide, it must satisfy Maxwell's equations throughout the waveguide. These mathematically complex equations are beyond the scope of this book, but one boundary condition of these equations can be put into plain language: There can be no tangential component of electric field at the walls of the waveguide. This makes sense because the conductor would then *short* out the $E$ field. An exact solution for the field existing within a waveguide is a relatively complicated mathematical expression. It is possible, however, to obtain an understanding of many of the properties of waveguide propagation from a simple physical picture of the mechanisms involved. The fields in a typical $TE_{10}$ waveguide can be considered as the resultant fields produced by an ordinary plane electromagnetic wave that travels back and forth between the sides of the guide, as illustrated in Figure 5.

The electric and magnetic component fields of this plane wave are in time phase but are geometrically at right angles to each other and to the direction of propagation. Such a wave travels with the velocity of light and, upon encountering the conducting walls of the guide, is reflected with a phase reversal of the electric field and with an angle of reflection equal to the angle of incidence. A picture of the wavefronts involved with such propagation for a rectangular waveguide is shown in Figure 6.

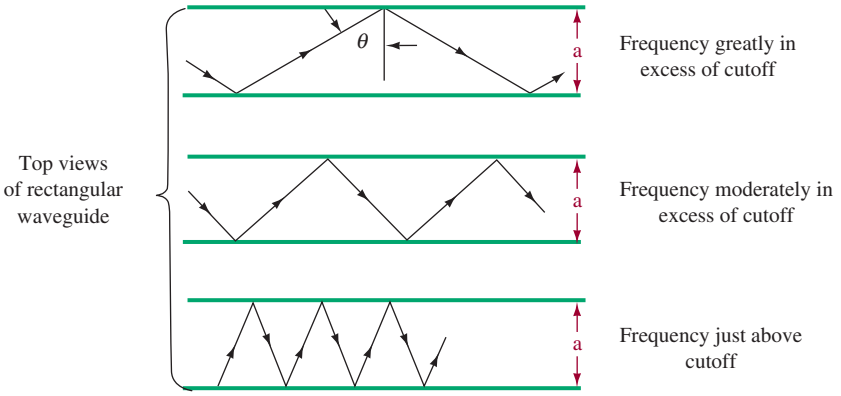


**FIGURE 5** Paths followed by waves traveling back and forth between the walls of a waveguide.

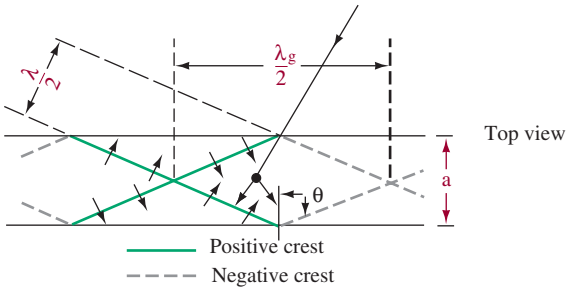


**FIGURE 6** Wavefront reflection in a waveguide.

When the angle $\theta$ (see Figure 5) is such that the successive positive and negative crests traveling in the same direction just fail to overlap inside the guide, it can be shown that the summation of the various waves and their reflections leads to the field distribution of the $TE_{10}$ mode, which travels down the waveguide and represents propagation of energy. The angle that the component waves must have with respect to the waveguide to satisfy the conditions for waveguide propagation in a rectangular guide is given by the relation

$$\cos\theta = \frac{\lambda}{2a} \tag{3}$$

where $a$ is the width of the waveguide and $\lambda$ is the wavelength of the wave on the basis of the velocity of light.

Because the component waves that can be considered as building up the actual field in the waveguide all travel at an angle with respect to the axis of the guide, the rate at which energy propagates down the guide is less than the velocity of light. This velocity with which energy propagates is termed group velocity ($V_g$) and in the case of Figure 6 is given by the relation

$$\frac{V_g}{c} = \sin\theta = \sqrt{1 - \left(\frac{\lambda}{2a}\right)^2} \tag{4}$$

The guide wavelength ($\lambda_g$) is greater than the free-space wavelength ($\lambda$). A study of the $\lambda_g/2$ and $\lambda/2$ shown in Figure 6 should help in visualizing this situation. Thus,

$$\frac{\text{wavelength in guide}}{\text{wavelength in free space}} = \frac{\lambda_g}{\lambda} = \frac{1}{\sin\theta} \tag{5}$$

and therefore

$$\frac{c}{V_g} = \frac{\lambda_g}{\lambda} = \frac{1}{\sqrt{1 - (\lambda/2a)^2}} \tag{6}$$

In Smith chart solutions of waveguide problems, $\lambda_g$ should be used for making moves, not the free-space wavelength $\lambda$. The velocity with which the wave appears to move past the guide's side wall is termed the phase velocity, $V_p$. It has a value greater than the speed of light. It is only an "apparent" velocity; however, it is the velocity with which the wave is changing phase at the side wall. The phase and group velocities, $V_p$ and $V_g$, respectively, are related by the fact that

$$\sqrt{V_p V_g} = \text{velocity of light} \tag{7}$$

As the wavelength is increased, the component waves must travel more nearly at right angles to the axis of the waveguide, as shown in the bottom portion of Figure 5. This causes the group velocity to be lowered and the phase velocity to be still greater than the velocity of light, until finally one has $\theta = 0°$. The component waves then bounce back and forth across the waveguide at right angles to its axis and do not travel down the guide at all. Under these conditions, the group

velocity is zero, the phase velocity becomes infinite, and propagation of energy ceases. This occurs at the frequency that was previously defined as the cutoff frequency, $f_{co}$. The cutoff frequency for the $TE_{10}$ mode of operation can be determined from the relationship given in Equation (1). Note that the waveguide acts as a high-pass filter, with the cutoff frequency determined by the waveguide dimensions. To obtain propagation, the waveguide must have dimensions comparable to a half-wavelength, and that limits its practical use to frequencies above 300 MHz.

At frequencies very much greater than cutoff frequency, it is possible for the higher-order modes of transmission to exist in a waveguide. Thus, if the frequency is high enough, propagation of energy can take place down the guide when the system of component waves that are reflected back and forth has the form of the $TE_{20}$ mode. It has a field distribution that is equivalent to two distributions of the dominant $TE_{10}$ mode placed side by side, but each with reversed polarity. This conceptual presentation of waveguide propagation, involving a wave suffering successive reflections between the sides of the guide, can be applied to all types of waves and to other than rectangular guides. The way in which the concept works out in these other cases is not so simple, however, as for the $TE_{10}$ mode.



## 4 Other Types of Waveguides

### Circular

The dominant mode ($TE_{10}$) for rectangular waveguides is by far the most widely used. The use of other modes or of other shapes is extremely limited. However, the use of a circular waveguide is found in radar applications where it is necessary to have a continuously rotating section like that in Figure 7. Modes in circular waveguides can be rotationally symmetrical, which means that a radar antenna can physically rotate with no electrical disturbance. While a circular waveguide is actually simpler to manufacture than a rectangular one, for a given frequency of operation, its cross-sectional area must be more than double that of a rectangular guide. It is, therefore, more expensive and takes up more space than a rectangular guide. Typical radar systems, therefore, consist of a main run with a rectangular waveguide and a circular rotating joint. The transition between rectangular and circular waveguides is accomplished with the circular-to-rectangular taper shown in Figure 8. The transition is accomplished as gradually as possible to minimize reflections.

One of the limitations of circular waveguides relates to the range of frequencies it can propagate. From Table 1, we can see that rectangular waveguide has a useful bandwidth of about 50 percent of the frequency range that can be propagated.

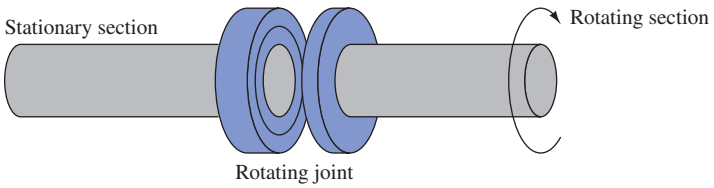


FIGURE 7 Circular waveguide rotating joint.

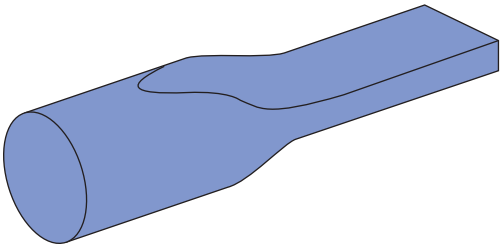

FIGURE 8 Circular-to-rectangular taper.

For example, at L-band frequencies, the range is 1.12 to 1.7 GHz, or 0.58 GHz, which is slightly less than half of the center frequency (1.41 GHz) of the waveguide frequency range.

$$\text{center frequency} = 1.12\ \text{GHz} + \frac{(1.7 - 1.12)\ \text{GHz}}{2} = 1.41\ \text{GHz}$$

In this case, 0.58 GHz is 41 percent of the center frequency:

$$\frac{0.58\ \text{GHz}}{1.41\ \text{GHz}} \times 100\% = 41\%$$

A study of the modes in a circular waveguide shows the bandwidth to be about 15 percent, a much reduced amount compared to a rectangular waveguide.

## Ridged

Two types of ridged waveguides are shown in Figure 9. While it is obviously more expensive to manufacture than a standard rectangular waveguide, it does provide one unique advantage. It allows operation at lower frequencies for a given set of outside dimensions, which means that smaller overall external dimensions are made possible. This property is advantageous in applications where space is at a premium, such as space probes and the like. A ridged waveguide has greater attenuation, and this, combined with its higher cost, limits it to special applications. This means that a ridged waveguide has the greater bandwidth as a percentage of center frequency.

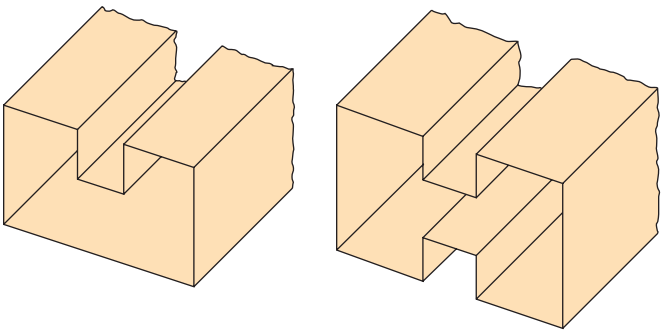

FIGURE 9 Ridged waveguides.

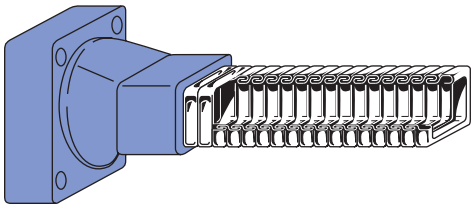

FIGURE 10 Flexible waveguide.

### Flexible

It is sometimes desirable to have a section of waveguide that is flexible, as shown in Figure 10. This configuration is often useful in the laboratory or in applications where continuous flexing occurs. Flexible waveguides consist of spiral-wound ribbons of brass or copper. The outside section is covered with a soft dielectric such as rubber to maintain air- and watertight conditions and prevent dust contamination, which can encourage arcs to form from one side to the other in high-power situations such as radar. A waveguide is often pressurized with nitrogen to prevent such contamination. In the case of a leak, gas rushes out, preventing anything from entering.

Corrosion would cause an increase in attenuation through surface current losses and increased reflections. In critical applications, waveguides are filled with inert gas and/or their inside walls are coated with noncorrosive (but expensive) metals such as gold or silver.



## 5 Other Waveguide Considerations

### Waveguide Attenuation

Waveguides are capable of propagating huge amounts of power. For example, typical X-band (0.9 × 0.4 in.) waveguides can handle 1 million W if operated at 1.5 times $f_{co}$ and an air dielectric strength of $3 \times 10^6$ V/m is assumed. At frequencies below cutoff, the attenuation in any waveguide is very large, as previously explained. At frequencies above cutoff, the guide supports traveling waves, and they are slightly attenuated because of losses in the conducting walls and in the dielectric that fills the guide. For air-filled guides, the dielectric loss is normally negligible, but if dielectric other than air is used, these losses are often greater than the conductor losses. As the frequency increases, attenuation drops to a broad minimum and then increases slowly with increasing frequency.

The conductor losses are governed in part by a skin effect. (At high frequencies the current tends to flow only at the surface of a conductor.) Current that flows in the guide walls is concentrated near the inner surface.

### Bends and Twists

It is often necessary to change the physical direction of propagation or the wave's polarization in waveguides.

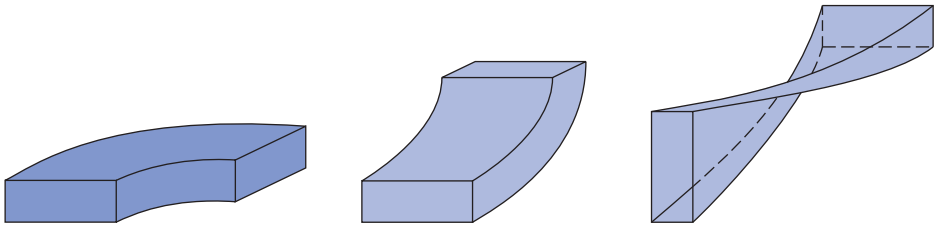

(a) H bend (b) E bend (c) Twist

FIGURE 11 Waveguide bends and twists.

1. *H bend* [Figure 11(a)]: It is used to change the physical direction of propagation. It derives its name from the fact that the *H* lines are bent in this transition, while the *E* lines remain vertical for the dominant mode.
2. *E bend* [Figure 11(b)]: This section is also used to change the physical direction of propagation. The choice between an *E* or *H* bend is normally governed by mechanical considerations (plumbing considerations, if you will) because neither produces large discontinuities if the bends are gradual enough.
3. *Twist* [Figure 11(c)]: A twist section is used to change the plane of polarization of the wave.

You can see that any desired angular orientation of the wave may be obtained with an appropriate combination of the three types of sections just discussed.

## Tees

1. *Shunt tee* [Figure 12(a)]: A shunt tee is so named because of the side arm shunting of the *E* field for TE modes, which is analogous to voltage in a transmission line. You can see that if two input waves at arms *A* and *B* are in phase,

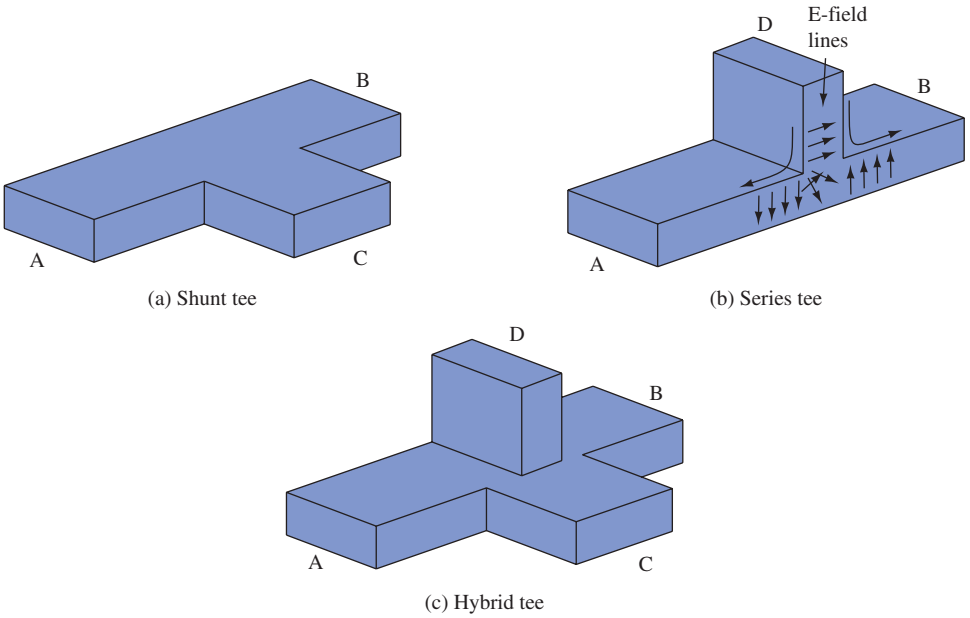


(a) Shunt tee (b) Series tee

(c) Hybrid tee

FIGURE 12 Shunt, series, and hybrid tees.



Rectangular and double-ridge seamless flexible waveguide assemblies, microwave components, waveguide subsystems, and special-purpose waveguide components designed and manufactured to customer specifications. (Courtesy of Continental Microwave & Tool Co.)

the portions transmitted into arm *C* will be in phase and thus will be additive. On the other hand, an input at *C* results in two equal, in-phase outputs at *A* and *B*. Of course, the *A* and *B* outputs have half the power (neglecting losses) of the *C* input.

2. *Series tee* [Figure 12(b)]: If you consider the *E* field of an input at *D*, you should be able to visualize that the outputs at *A* and *B* are equal and 180° out of phase, as shown. Once again, the two outputs are equal but are now 180° out of phase. The series tee is often used for impedance matching just as the single-stub

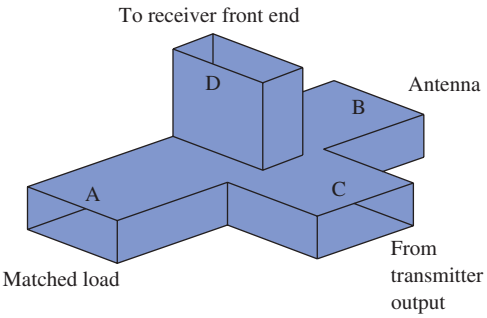


FIGURE 13 Hybrid-tee TR switch.

tuner is used for transmission lines. In that case, arm *D* contains a sliding piston to provide a short circuit at any desired point.

3. *Hybrid or magic tee* [Figure 12(c)]: This is a combination of the first two tees mentioned and exhibits properties of each. From previous consideration of the shunt and series tees, you can see that if two equal signals are fed into arms *A* and *B* in phase, there is cancellation in arm *D* and reinforcement in arm *C*. Thus, all the energy will be transmitted to *C* and none to *D*. Similarly, if energy is fed into *C*, it will divide evenly between *A* and *B*, and none will be transmitted to *D*. The hybrid tee has many interesting applications.

A typical hybrid tee application is illustrated in Figure 13. It is functioning as a transmit/receive switch (TR switch), which allows a single antenna to be used for both transmission and reception. The transmitter's output is fed into arm *C*, where it splits between the *A* and *B* outputs, with almost no power going to the sensitive receiver at *D*. When the antenna receives a signal at *B*, energy is sent to the receiver at *D* as well as to arms *A* and *C*. The low received power does no damage to the powerful transmitter output. The matched load at *A* is necessary to prevent reflections. Problem 60 at the end of the chapter introduces you to another hybrid tee application.

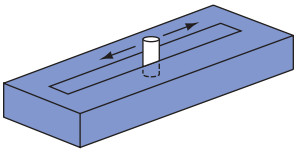

(a) Slide-screw tuner

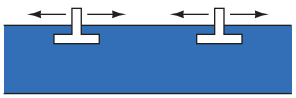

(b) Double-slug tuner

FIGURE 14 Tuners.

## Tuners

A metallic post inserted in the broad wall of a waveguide provides a lumped reactance at that point. The action is similar to the addition of a shorted stub along a transmission line. When the post extends less than a quarter-wavelength, it appears capacitive, while exceeding a quarter-wavelength makes it appear inductive. Quarter-wavelength insertion causes a series resonance effect whose sharpness ($Q$) is inversely proportional to the diameter of the post.

The primary usage of posts is in matching a load to a guide to minimize the VSWR. The most often used configurations are shown in Figure 14.

1. *Slide-screw tuner* [Figure 14(a)]: The slide-screw tuner consists of a screw or metallic object of some sort protruding vertically into the guide and adjustable both longitudinally and in depth. The effect of the protruding object is to produce shunting reactance across the guide—thus, it is analogous to a single-stub tuner in transmission line theory.

2. *Double-slug tuner* [Figure 14(b)]: This type of tuner involves placing two metallic objects, called slugs, in the waveguide. The necessary two degrees of freedom to effect a match are obtained by making adjustable both the longitudinal position of the slugs and the spacing between them. Thus, it is somewhat analogous to the transmission line double-stub tuner but differs because the position of the slugs and not the effective shunting reactance is variable.



## 6 Termination and Attenuation

Because a waveguide is a single conductor, it is not as easy to define its characteristic impedance ($Z_0$) as it is for a coaxial line. Nevertheless, you can think of the characteristic impedance of a waveguide as being approximately equal to the ratio of the strength of the electric field to the strength of the magnetic field for energy traveling in one direction. This ratio is equivalent to the voltage-to-current ratio in coaxial lines on which there are no standing waves. For an air-filled rectangular wave-guide operating in the dominant mode, its characteristic impedance is given by

$$Z_0 = \frac{\mathscr{Z}}{\sqrt{1 - (\lambda/2a)^2}} \tag{8}$$

where $\mathscr{Z}$ is the characteristic impedance of free space $= 120\pi = 377\ \Omega$. The guide's characteristic impedance is affected by the frequency of the energy in it because $\lambda = c/f$. Therefore, the guide's impedance is variable and more correctly termed **characteristic wave impedance** rather than just characteristic impedance.

**Characteristic Wave Impedance**
characteristic impedance of a waveguide; affected by the frequency of operation

On a waveguide there is no place to connect a fixed resistor to terminate it in its characteristic (wave) impedance as there is on a coaxial cable. But several special arrangements accomplish the same result. One consists of filling the end of the waveguide with graphited sand, as shown in Figure 15(a). As the fields enter the sand, currents flow in it. These currents create heat, which dissipates the energy.

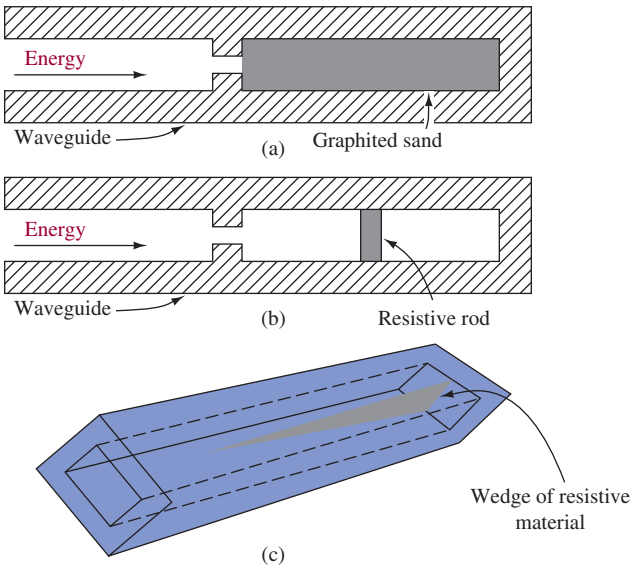


FIGURE 15 Termination for minimum reflections.

None of the energy dissipated as heat is reflected back into the guide. Another arrangement [Figure 15(b)] uses a high-resistance rod, which is placed at the center of the $E$ field. The $E$ field (voltage) causes current to flow through the rod. The high resistance of the rod dissipates the energy as an $I^2R$ loss.

Still another method for terminating a waveguide is to use a wedge of resistive material [Figure 15(c)]. The plane of the wedge is placed perpendicular to the magnetic lines of force. When the $H$ lines cut the wedge, a voltage is induced in it. The current produced by the induced voltage flowing through the high resistance of the wedge creates an $I^2R$ loss. This loss is dissipated in the form of heat. This permits very little energy reaching the closed end to be reflected.

Each of the preceding terminations is designed to match the impedance of the guide to ensure a minimum of reflection. On the other hand, there are many instances where it is desirable for all the energy to be reflected from the end of the waveguide. The best way to accomplish this is to simply attach or weld a metal plate at the end of the waveguide.

## Variable Attenuators

Variable attenuators find many uses at microwave frequencies. They are used to (1) isolate a source from reflections at its load to preclude frequency pulling; (2) adjust the signal level, as in one arm of a microwave bridge circuit; and (3) measure signal levels, as with a calibrated attenuator.

There are two versions of variable attenuators:

1. *Flap attenuator* [Figure 16(a)]: Attenuation is accomplished by insertion of a thin card of resistive material (often referred to as a **vane**) through a slot in the

**Vane**
a thin card of resistive material used as a variable attenuator in a waveguide

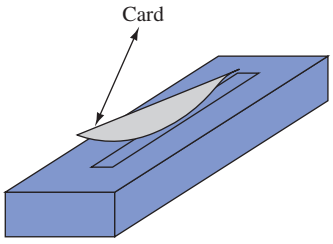


(a) Flap attenuator

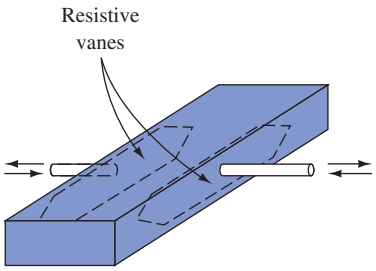


(b) Vane attenuator

FIGURE 16 Attenuators.

top of the guide. The amount of insertion is variable, and the attenuation can be made approximately linear with insertion by proper shaping of the resistance card. Notice the tapered edges, which minimize unwanted reflections.

2. *Vane attenuator* [Figure 16(b)]: In this type of attenuator the resistance card or vanes move in from the sides, as shown in the figure. You can see that the losses (and thus attenuation) are at a minimum when the vanes are close to the side walls where $E$ is small, and maximum when the vanes are in the center.



## 7 Directional Coupler

The two-hole directional coupler consists of two pieces of waveguide with one side common to both guides and two holes in this common side. Its function is analogous to directional couplers used for transmission lines. The sections may be arranged physically either side by side or one over the other. The directional properties of such a device can be seen by looking at the wave paths labeled *A, B, C,* and *D* in Figure 17.

Waves *A* and *B* follow equal-length paths and thus combine in phase in the secondary guide. If the spacing between holes is $\lambda_g/4$, waves *C* and *D* (which are of equal strength) are $\lambda_g/2$ or 180° out of phase and thus cancel. Therefore, if the field within the main guide consists of a superposition of incident and reflected waves, a certain fraction of the wave moving left to right will be coupled out through the secondary guide, and the same fraction of the right-to-left wave will be dissipated in the vane. The wave traveling from right to left causes this energy to be cancelled in the secondary guide's output due to the 180° phase shift caused by the $\lambda_g/2$ path difference of its two equal components through the two coupling holes. This type of coupler is frequency-sensitive because the spacing between holes must be $\lambda_g/4$ or an odd multiple thereof. The addition of more holes properly spaced can improve both the operable frequency range and directivity. This is known as a multihole coupler.

Thus, we see that a directional coupler transfers energy from a primary to an adjacent—otherwise independent—secondary waveguide for energy traveling in the main guide in one direction only. The energy that flows toward the left in the secondary guide is absorbed by the vane in Figure 17, which is a matched load to prevent reflections.

The ratio of $P_{out}$ and the incident power, $P_{in}$, is known as the *coupling*:

$$\text{coupling (dB)} = 10 \log \frac{P_{in}}{P_{out}} \tag{9}$$

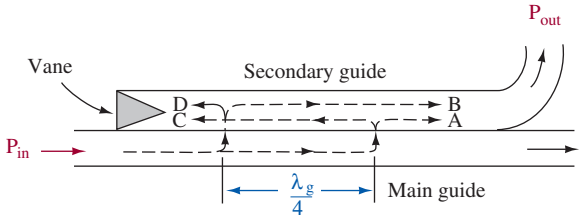


FIGURE 17 Two-hole directional coupler.

We now can understand that a directional coupler can distinguish between the waves traveling in opposite directions. It can be arranged to respond to either incident or reflected waves. By connecting a microwave power meter to the output of the secondary guide, a measure of power flow can be made. The coupling is normally less than 1 percent so that the power meter has negligible loading effect on the operation in the main guide. By physically reversing the directional coupler, a power flow in the opposite direction is determined, and the level of reflections and SWR can be determined.



## 8 Coupling Waveguide Energy and Cavity Resonators

We have described waveguide operation in terms of *E* and *M* fields, but how do we form these fields within the guide? In other words, how do we get energy into and out of a waveguide? Fundamentally, there are three methods of coupling energy into or out of a waveguide: *probe, loop,* and *aperture*. Probe, or capacitive, coupling is illustrated in Figure 18. Its action is the same as that of a quarter-wave monopole antenna. When the probe is excited by an RF signal, an electric field is set up [Figure 18(a)]. The probe should be located in the center of the *a* dimension and a quarter-wavelength, or odd multiple of a quarter-wavelength, from the short-circuited end, as illustrated in Figure 18(b). This is a point of maximum *E* field and, therefore, is a point of maximum coupling between the probe and the field. Usually, the probe is fed with a short length of coaxial cable. The outer conductor is connected to the waveguide wall, and the probe extends into the guide but is insulated from it, as shown in Figure 18(c). The degree of coupling may be varied by varying the length of the probe, removing it from the center of the *E* field, or shielding it.

In a pulse-modulated radar system, there are wide sidebands on either side of the carrier frequency. For a probe not to discriminate too sharply among frequencies

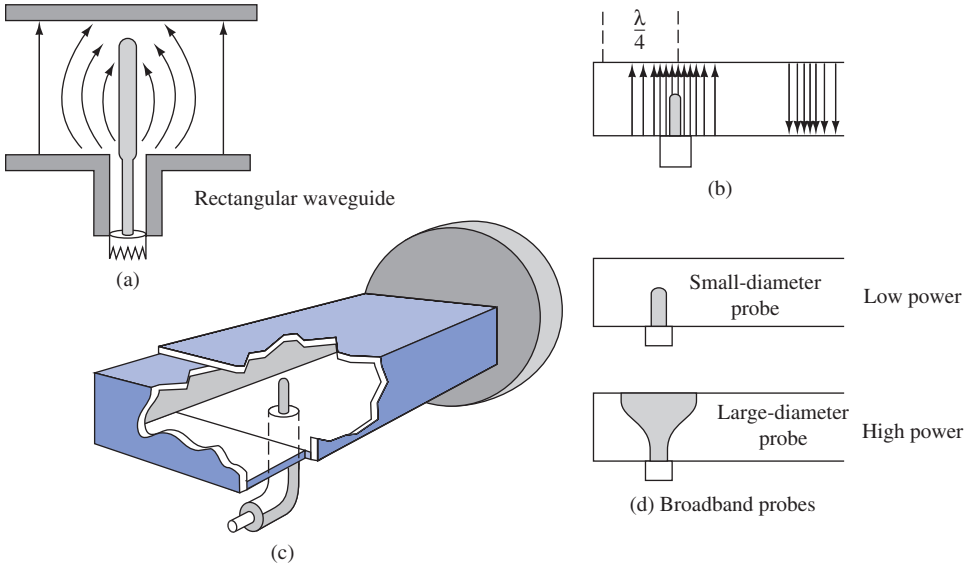


FIGURE 18 Probe, or capacitive, coupling.

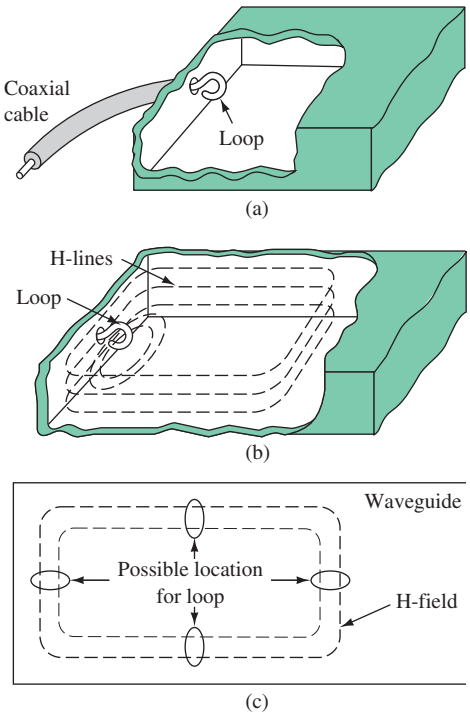


FIGURE 19 Loop, or inductive, coupling.

that differ from the carrier frequency, a wideband probe may be used. This type of probe is illustrated in Figure 18(d) for both low- and high-power usage.

Figure 19 illustrates loop, or inductive, coupling. The loop is placed at a point of maximum *H* field in the guide. As shown in Figure 19(a), the outer conductor is connected to the guide, and the inner conductor forms a loop inside the guide. The current flow in the loop sets up a magnetic field in the guide. This action is illustrated in Figure 19(b). As shown in Figure 19(c), the loop may be placed in several locations. The degree of loop coupling may be varied by rotation of the loop.

The third method of coupling is aperture, or slot, coupling. This type of coupling is shown in Figure 20. Slot *A* is at an area of maximum *E* field and is a form of electric field coupling. Slot *B* is at an area of maximum *H* field and is a form of magnetic field coupling. Slot *C* is at an area of maximum *E* and *H* field and is a form of electromagnetic coupling.

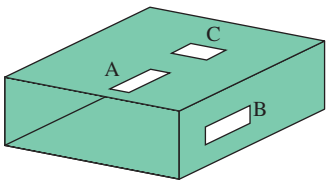


FIGURE 20 Aperture, or slot, coupling.

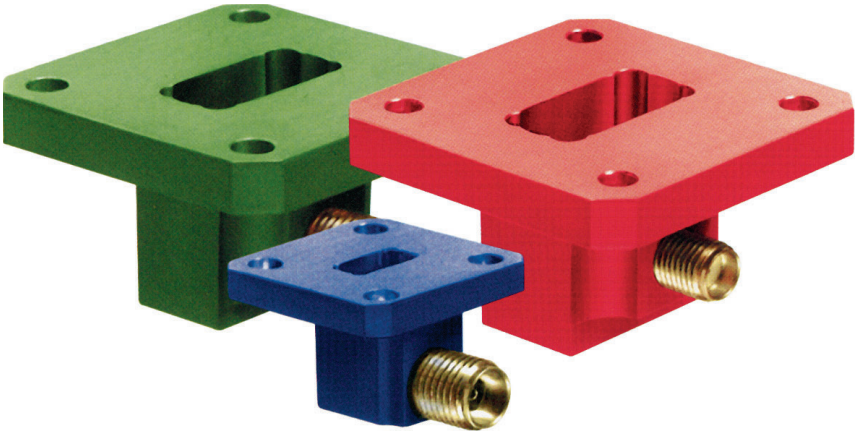

Waveguide to coaxial conversion. (Courtesy of Microwave Development Laboratories.)

## Cavity Resonators

Circuits composed of lumped inductance and capacitance elements may be made to resonate at any frequency from less than 1 Hz to many thousand megahertz. At extremely high frequencies, however, the physical size of the inductors and capacitors becomes extremely small. Also, losses in the circuit become extremely great. Resonant devices of different construction are therefore preferred at extremely high frequencies. In the UHF range, sections of parallel wire or coaxial transmission line are commonly employed in place of lumped constant resonant circuits. In the microwave region, cavity resonators are used. Cavity resonators are metal-walled chambers fitted with devices for admitting and extracting electromagnetic energy. The $Q$ of these devices may be much greater than that of conventional $LC$ tank circuits.

Although cavity resonators, built for different frequency ranges and applications, have various physical forms, the basic principles of operation are essentially the same for all. Operating principles of cavity resonators are explained in this chapter.

Resonant cavity walls are made of highly conductive material and enclose a good dielectric, usually air. One example of a cavity resonator is the rectangular box shown in Figure 21. It may be thought of as a section of rectangular waveguide closed at both ends by conducting plates. Because the end plates are short circuits for waves traveling in the $Z$ direction, the cavity is analogous to a transmission line section with short circuits at both ends. Resonant modes occur at frequencies for which the distance between end plates is a half-wavelength or multiple of the half-wavelength.

Cavity modes are designated by the same numbering system that is used with waveguides, except that a third subscript is used to indicate the number of half-wave patterns of the transverse field along the axis of the cavity (perpendicular to the transverse field). The rectangular cavity is only one of many cavity devices useful as high-frequency resonators. By appropriate choice of cavity shape, advantages such as compactness, ease of tuning, simple mode spectrum, and high $Q$ may be secured as required for special applications. Coupling energy to and

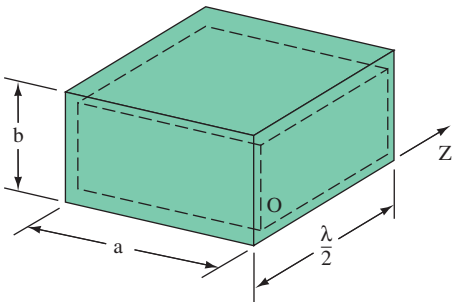


FIGURE 21 Rectangular waveguide resonator.

from the cavity is accomplished just as for the standard waveguide, as shown in Figure 19.

## Cavity Tuning

The resonant frequency of a cavity may be varied by changing any of three parameters: *cavity volume, cavity inductance*, or *cavity capacitance.* Although the mechanical methods for tuning cavity resonators may vary, they all utilize the electrical principles explained below.

Figure 22 illustrates a method of tuning a cylindrical-type cavity by varying its volume. Varying the distance *d* results in a new resonant frequency. Increasing distance *d* lowers the resonant frequency, while decreasing *d* causes an increase in resonant frequency. The movement of the disk may be calibrated in terms of frequency. A micrometer scale is usually used to indicate the position of the disk, and a calibration chart is used to determine frequency.

A second method for tuning a cavity resonator is to insert a nonferrous metallic screw (such as brass) at a point of maximum *H* field. This decreases the permeability of the cavity and decreases its effective inductance, which raises its resonant frequency. The farther the screw penetrates into the cavity, the higher is the resonant frequency. A paddle can be used in place of the screw. Turning the paddle to a position more nearly perpendicular to the *H* field increases resonant frequency.

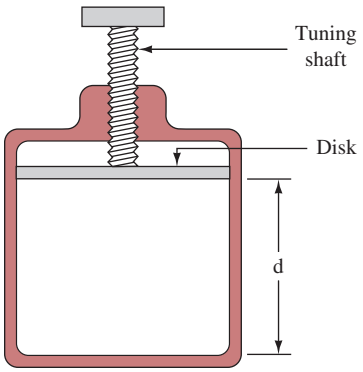


FIGURE 22 Cavity tuning by volume.



# 9 RADAR

**Radar**
using radio waves to detect and locate objects by determining the distance and direction from the radar equipment to the object

The first practical use of waveguides occurred with the development of radar during World War II. The high powers and high frequencies involved in these systems are much more efficiently carried by waveguides than by transmission lines. The word **radar** is an acronym formed from the words *ra*dio *d*etection *a*nd *r*anging. Radar is a means of employing radio waves to detect and locate objects such as aircraft, ships, and land masses. Location of an object is accomplished by determining the distance and direction from the radar equipment to the object. The process of locating objects requires, in general, the measurement of three coordinates: range, angle of azimuth (horizontal direction), and angle of elevation.

**Echo Signal**
part of the returning radar energy collected by the antenna and sent to the receiver

A radar set consists fundamentally of a transmitter and a receiver. When the transmitted signal strikes an object (target), some of the energy is sent back as a reflected signal. The small-beamwidth transmit/receive antenna collects a portion of the returning energy (called the **echo signal**) and sends it to the receiver. The receiver detects and amplifies the echo signal, which is then used to determine object location.

Military use of radar includes surveillance and tracking of air, sea, land, and space targets from air, sea, land, and space platforms. It is also used for navigation, including aircraft terrain avoidance and terrain following. Many techniques and applications of radar developed for the military are now found in civilian equipment. These applications include weather observation, geological search techniques, and air traffic control units, to name just a few. All large ships at sea carry one or more radars for collision avoidance and navigation. Certain frequencies see better through rain; others resolve closely spaced targets better; still others are suited for long-range operation. Generally, the larger a radar antenna, the better the system's resolution. In space, radars are used for spacecraft rendezvous, docking, and landing, as well as for remote sensing of the earth's environment and planetary exploration.

## RADAR WAVEFORM AND RANGE DETERMINATION

**Pulse Repetition Frequency (PRF)**
the number of radar pulses (waveforms) transmitted per second

**Pulse Repetition Rate (PRR)**
the pulse repetition rate

**Pulse Repetition Time (PRT)**
the time from the beginning of one pulse to the beginning of the next

**Rest Time**
the time between pulses

**Receiver Time**
rest time

**Radar Mile**
unit of measurement equal to 2000 yd (6000 ft)

A representative radar pulse (waveform) is shown in Figure 23. The number of these pulses transmitted per second is called the **pulse repetition frequency (PRF)** or **pulse repetition rate (PRR).** The time from the beginning of one pulse to the beginning of the next pulse is called the **pulse repetition time (PRT).** The PRT is the reciprocal of the PRF (PRT = 1/PRF). The duration of the pulse (the time the transmitter is radiating energy) is called the *pulse width* (PW). The time between pulses is called **rest time** or **receiver time.** The pulse width plus the rest time equals the PRT (PW + rest time = PRT). For radar to provide an accurate directional picture, a highly directive antenna is necessary. The desired directivity can be provided only by microwave antennas, and thus the RF energy shown in Figure 23 is usually in the GHz (microwave) range.

The distance to the target (range) is determined by the time required for the pulse to travel to the target and return. The velocity of electromagnetic energy is 186,000 statute mi/s, or 162,000 nautical mi/s. (A nautical mile is the accepted unit of distance in radar and is equal to 6076 ft.) In many instances, however, measurement accuracy is secondary to convenience, and as a result a unit known as the **radar mile** is commonly used. A radar mile is equal to 2000 yd, or 6000 ft. The small difference between a radar mile and a nautical mile introduces an error of about 1 percent in range determination.

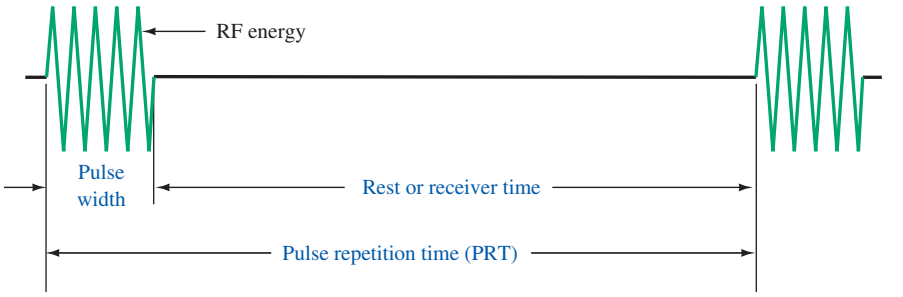


FIGURE 23 Radar pulses.

For purposes of calculating range, the two-way travel of the signal must be taken into account. It can be found that it takes approximately 6.18 $\mu$s for electromagnetic energy to travel 1 radar mile. Therefore, the time required for a pulse of energy to travel to a target and return is 12.36 $\mu$s/radar mile. The range, in miles, to a target may be calculated by the formula

$$\text{range} = \frac{\Delta t}{12.36} \tag{10}$$

where $\Delta t$ is the time between transmission and reception of the signal in microseconds. For shorter ranges and greater accuracy, however, range is measured in meters.

$$\text{range (meters)} = \frac{c\Delta t}{2} \tag{11}$$

where $c$ is the speed of light and $\Delta t$ is in seconds.

## Radar System Parameters

Once the pulse of electromagnetic energy is emitted by the radar, a sufficient length of time must elapse to allow any echo signals to return and be detected before the next pulse is transmitted. Therefore, the PRT of the radar is determined by the longest range at which targets are expected. If the PRT were too short (PRF too high), signals from some targets might arrive after the transmission of the next pulse. This could result in ambiguities in measuring range. Echoes that arrive after the transmission of the next pulse are called **second return echoes** (also *second time around* or *multiple time around echoes*). Such an echo would appear to be at a much shorter target range than actually exists and could be misleading if not identified as a second return echo. The range beyond which targets appear as second return echoes is called the *maximum unambiguous range.* Maximum unambiguous range may be calculated by the formula

**Second Return Echoes**
echoes that arrive after the transmission of the next pulse

$$\text{maximum unambiguous range} = \frac{\text{PRT}}{12.2} \tag{12}$$

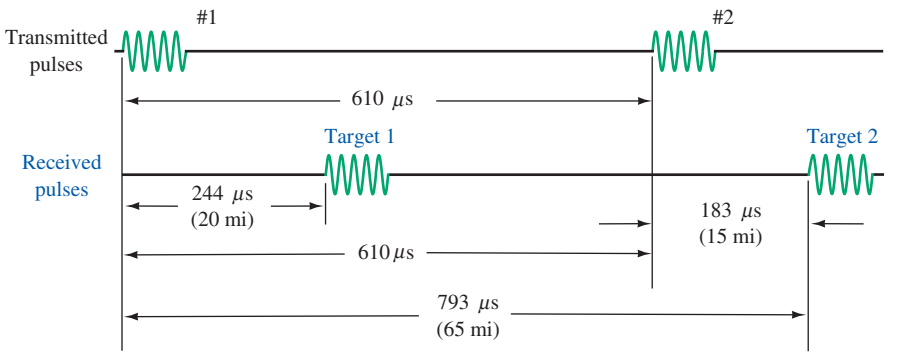


FIGURE 24 Second return echo.

where range is in miles and the PRT is in microseconds. Figure 24 illustrates the principles of the second return echo.

Figure 24 shows a signal with a PRT of 610 $\mu$s, which results in a maximum unambiguous range of 50 mi. Target number 1 is at a range of 20 mi. Its echo signal takes 244 $\mu$s to return. Target number 2 is actually 65 mi away, and its echo signal takes 793 $\mu$s to return. However, this is 183 $\mu$s after the next pulse was transmitted; therefore, target number 2 appears to be a weak target 15 mi away. Thus, the maximum unambiguous range is the **maximum usable range** and will be referred to from now on as simply *maximum range.* (It is assumed here that the radar has sufficient power and sensitivity to achieve this range.)

**Maximum Usable Range**
the maximum distance before second return echoes start occurring

If a target is so close to the transmitter that its echo is returned to the receiver before the transmitter is turned off, the reception of the echo will be masked by the transmitted pulse. In addition, almost all radars utilize an electronic device to block the receiver for the duration of the transmitted pulse. However, **double range echoes** are frequently detected when there is a large target close by. Such echoes are produced when the reflected beam is strong enough to make a second trip, as shown in Figure 25. Double range echoes are weaker than the main echo and appear at twice the range.

**Double Range Echoes**
echoes produced when the reflected beam makes a second trip

Minimum range is measured in meters and may be calculated by the formula

$$\text{minimum range} = 150\ \text{PW} \tag{13}$$

where range is in meters and pulse width (PW) is in microseconds. Typical pulse widths range from fractions of a microsecond for short-range radars to several microseconds for high-power long-range radars.

A radar transmitter generates RF energy in the form of extremely short pulses with comparatively long intervals of rest time. The useful power of the transmitter is that contained in the radiated pulses and is termed the **peak power** of the system. Because the radar transmitter is resting for a time that is long with respect to the pulse time, the average power delivered during one cycle of operation is relatively low compared with the peak power available during the pulse time.

**Peak Power**
the useful power of the transmitter contained in the radiated pulses

The **duty cycle** of radar is

**Duty Cycle**
the ratio of pulse width to pulse repetition time

$$\text{duty cycle} = \frac{\text{pulse width}}{\text{pulse repetition time}} \tag{14}$$

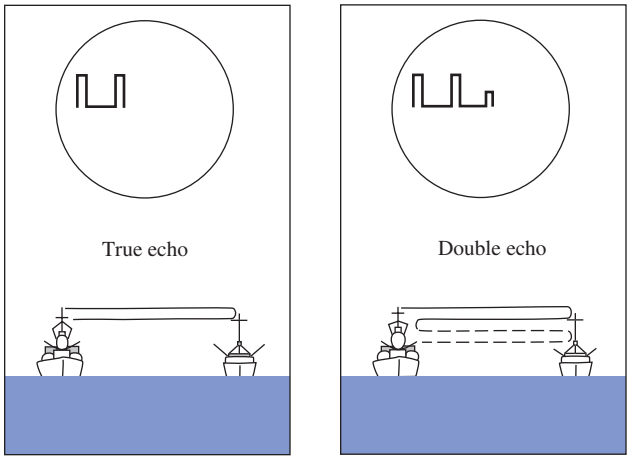


FIGURE 25 Double range echo.

For example, the duty cycle of a radar having a pulse width of 2 $\mu$s and a pulse repetition time of 2 ms is

$$\frac{2 \times 10^{-6}}{2 \times 10^{-3}} \text{ or } 0.001$$

Similarly, the ratio between the average power and peak power may be expressed in terms of the duty cycle. In a system with peak power of 200 kW, a PW of 2 $\mu$s, and a PRT of 2 ms, a peak power of 200 kW is supplied to the antenna for 2 $\mu$s, while for the remaining 1998 $\mu$s the transmitter output is zero. Because average power equals peak power times duty cycle, the average power equals $(2 \times 10^5) \times (1 \times 10^{-3})$, or 200 W.

High peak power is desirable for producing a strong echo over the maximum range of the equipment. Conversely, low average power enables the transmitter output circuit components to be made smaller and more compact. Thus, it is advantageous to have a low duty cycle. A short pulse width is also advantageous with respect to being able to "see" (resolve) closely spaced objects.

## Basic Radar Block Diagram

A block diagram of a basic radar system is shown in Figure 26. The pulse repetition frequency is controlled by the *timer* (also called *trigger generator* or *synchronizer*) in the modulator block. The pulse-forming circuits in the modulator are triggered by the timer and generate high-voltage pulses of rectangular shape and short duration. These pulses are used as the supply voltage for the transmitter and, in effect, turn it on and off. The modulator, therefore, determines the pulse width of the system. The transmitter generates the high-frequency, high-power RF carrier and determines the carrier frequency. The duplexer is an electronic switch that allows the use of a common antenna for both transmitting and receiving. It prevents the strong transmitted signal from being received by the sensitive receiver. The receiver section is basically a conventional superheterodyne receiver. In older radars, no RF amplifier is found because of noise problems with the RF amplifiers of the World War II era.

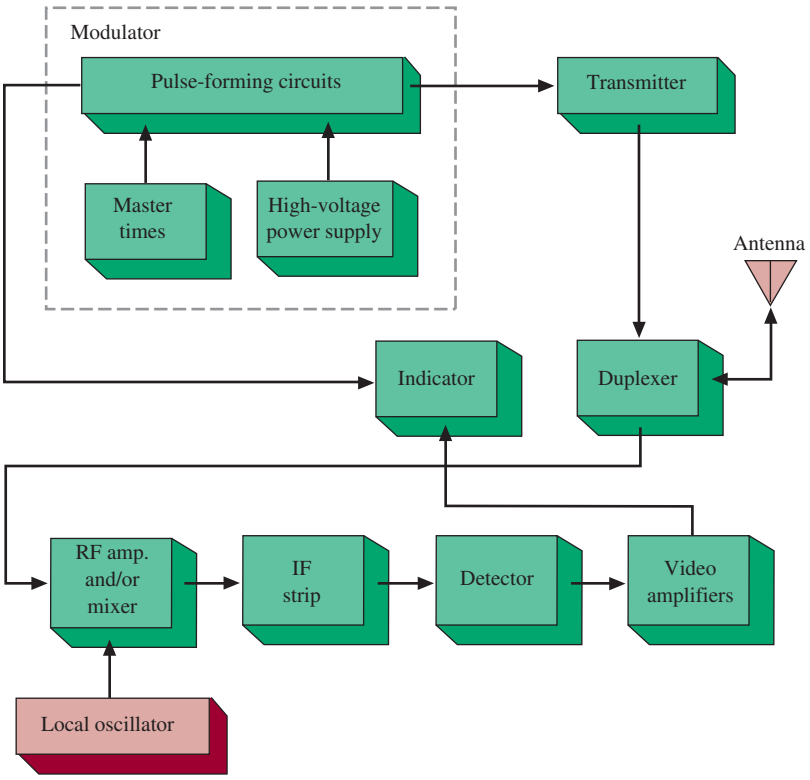


FIGURE 26 Radar system block diagram.

## Doppler Effect

**Doppler Effect**
phenomenon whereby the frequency of a reflected signal is shifted if there is a relative motion between the source and the reflecting object

The **Doppler effect** is the phenomenon whereby the frequency of a reflected signal is shifted if there is relative motion between the source and reflecting object. This is the same effect whereby the pitch of a train's whistle is shifted as the train moves toward and then away from the listener. Doppler radar, or CW radar, is always on. It is not turned off and on as pulsed radar is, hence the name, continuous wave. Only moving targets are "seen" by CW radar because only moving targets cause a Doppler shift. CW radars use two antennas, one each for transmitting and receiving.

The amount of frequency shift encountered is determined by the relative velocity between transmitter and target. It is predicted by

$$f_d = \frac{2v \cos \theta}{\lambda} \tag{15}$$

where $f_d$ = frequency change between transmitted and reflected signal
$v$ = relative velocity between radar and target
$\lambda$ = wavelength of transmitted wave
$\theta$ = angle between target direction and radar system

If you have ever received a speeding ticket, in a radar trap, you now have a better understanding of your downfall.



# 10 RFID (Radio Frequency Identification)

**Radio Frequency Identification (RFID)** is a technique that uses radio waves to track and identify people, animal, objects, and shipments. This is done by the principle of modulated **backscatter.** The term *backscatter* refers to the reflection of the radio waves striking the RFID tag and reflecting back to the transmitter source with its stored unique identification information.

The basic block for an RFID system is provided in Figure 27. The RFID system consists of two things:

- *RFID tag* (also called the *RF transponder*), which includes an integrated antenna and radio electronics
- *Reader* (also called a transceiver), which consists of a transceiver and an antenna. A transceiver is the combination of a transmitter and receiver

The reader (transceiver) transmits radio waves that activate (turn on) an RFID tag. The tag then transmits modulated data, containing its unique identification information stored in the tag, back to the reader. The reader then extracts the data stored on the RFID tag.

The RFID idea dates back to 1948 when the concept of using reflected power as a means of communication was first proposed. The 1970s saw further development in RFID technology, in particular, a UHF scheme that incorporates rectification of the RF signal for providing power to the tag. Development of RFID technology significantly increased in the 1990s. Applications included tollbooths that allow vehicles to pass through highway speeds while still recording data from the tag.

Today, RFID technology is being used to track inventory shipments for major commercial retailers, the transportation industries, and the Department of Defense. Additionally, RFID applications are being used in Homeland Security in tracking container shipments at border crossings.

**Radio Frequency Identification (RFID)**
a technique that uses radio waves to track and identify people, animals, objects, and shipments

**Backscatter**
refers to the reflection of the radio waves striking the RFID tag and reflecting back to the transmitter source

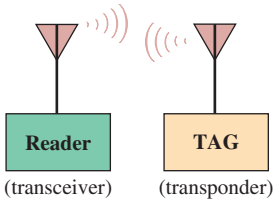


FIGURE 27 Basic block diagram of an RFID system.



An example of an RFIF tracking system. (Courtesy of Symbol Technologies, Inc.)

There are three parameters that define an RFID system. These include the following:

- Means of powering the tag
- Frequency of operation
- Communications protocol (also called the air *interface protocol*)

## Powering the Tag

RFID tags are classified in three ways on the basis of how they obtain their operating power. The three different classifications are passive, semiactive, and active.

- Passive: Power is provided to the tag by rectifying the RF energy transmitted from the reader that strikes the RF tag antenna. The rectified power level is sufficient to power the ICs on the tags and also provides sufficient power for the tag to transmit a signal back to the reader. An example of two passive RFID tags (also called *inlays*) is shown in Figure 28.

The tag inlays include both the RFID chip and antenna mounted on a substrate. The antenna for the RF inlay shown in Figure 28(a) is a single-dipole antenna, and the inlay shown in Figure 28(b) incorporates a dual-dipole antenna. The single-dipole antenna configuration for the RFID tag works well if the orientation of the inlay is properly aligned to the reader's antenna. RFID readers can use a circularly polarized antenna to minimize the effect of tag orientation. However, there is an issue of limited read distance with circularly polarized antennae because of the distribution of the receive power between the horizontal and vertical elements.

The advantage of the dual-dipole (shown in Figure 28[b]) is the improvement in the independence of the tag relative to the reader's antenna. The two dipoles of the dual-dipole antenna (Figure 28[b]) are oriented at 90° angles to each other. This arrangement means the tag orientation is not critical for the dual-dipole inlay.

- Semiactive: The tags use a battery to power the electronics on the tag but use the property of backscatter to transmit information back to the reader.
- Active: The tags use a battery to power the tag and transmit a signal back to the reader. Basically, this is a radio transmitter. New active RFID tags are

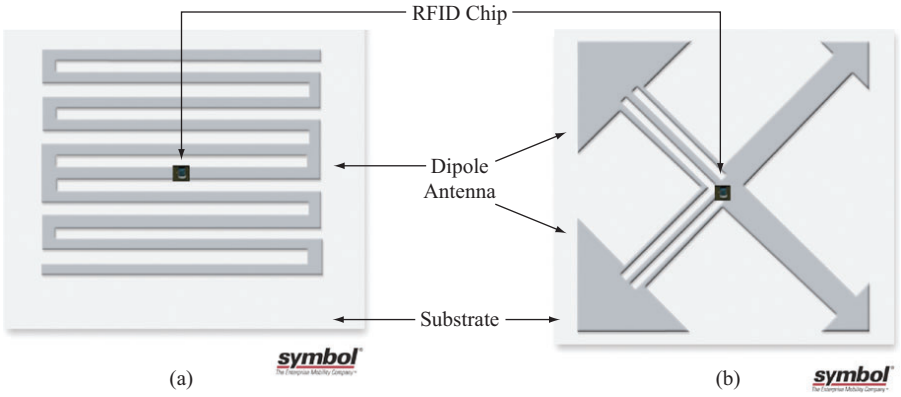


FIGURE 28 Examples of (a) single-dipole and (b) dual-dipole RFID inlays. (© 2007 Symbol Technologies, Inc. Reprinted with permission.)

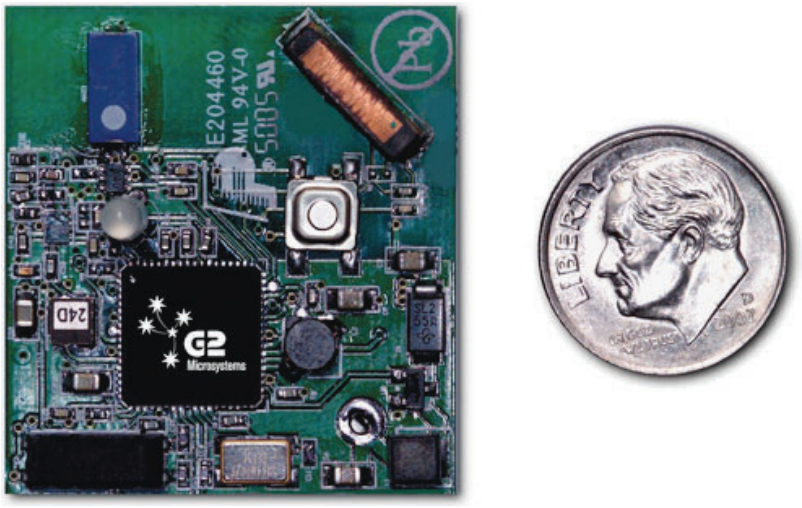


FIGURE 29 The G2C501 active RFID tag from G2 Microsystems. (Courtesy of G2 Microsystems.)

incorporating wireless Ethernet, the 802.11b–Wi-Fi connectivity. An example is the G2C501 active RFID tag from G2 Microsystems shown in Figure 29. The power consumption of the G2C501 is 10$\mu$A in the sleep mode and it uses two AA batteries with an expected lifetime of 5 years. The G2C501 also works in the standard 915-MHz range. The G2C501 also has location capability. This is accomplished by making RSSI (receive signal strength indicator) measurements from three separate access points. The three measurements provide sufficient information to make a triangulation measurement for use in locating the object.

## Frequency of Operation

The RFID tags must be tuned to the reader's transmit frequency to turn on. RFID systems typically use three frequency bands for operation, LF, HF, and UHF as shown in Figure 30.

Low-frequency (LF) tags typically use frequency-shift keying (FSK) between the 125–134-kHz frequencies. The data rates from these tags is low (~12 kbps), and they are not appropriate for any applications requiring fast data transfers.

However, the low-frequency tags are suitable for animal identification, such as dairy cattle and other livestock. The RFID tag information is typically obtained when the livestock are being fed. The read range for low-frequency tags is approximately .33 m.

High-frequency (HF) tags operate in the 13.56-MHz industrial band. High-frequency tags have been available commercially since 1995. It is known that the longer wavelengths of the HF radio signal are less susceptible to absorption by water or other liquids. Therefore, these tags are better suited for tagging liquids. The

| LF | HF | UHF |
|---|---|---|
| 125/134 kHz | 13.56 MHz | 860–960 MHz<br>2.4 GHz |

FIGURE 30 The frequency bands used by RFID tags.

read range for high-frequency tags is approximately 1 m. The short read range provides for better defined read ranges. The applications for tags in this frequency range include access control, smart cards, and shelf inventory.

Ultra-high-frequency (UHF) tags work at 860–960 MHz and at 2.4 GHz. The data rates for these tags can be from 50–150 kbps and greater. These tags are popular for tracking inventory. The read range for passive UHF tags is 10–20 ft., which makes them a better choice for reading pallet tags. However, if an active tag is used, a read range of up to 100 m is possible.

### Communications (Air Interface) Protocol

The air interface protocol adopted for RFID tags is **slotted aloha,** a network communications protocol technique similar to the Ethernet protocol. In a slotted aloha protocol, the tags are only allowed to transmit at predetermined times after being energized. This technique reduces the chance of data collisions between RFID tag transmissions and allows for the reading of up to 1,000 tags per second. (Note, this is for HF tags). The operating range for RFID tags can be up to 30 m. This means that multiple tags can be energized at the same time, and a possible RF data collision can occur. If a collision occurs, the tag will transmit again after a random back-off time. The readers transmit continuously until there is no tag collision.



## 11 Microintegrated Circuit Waveguiding

The field of communications now makes heavy use of the frequencies from 1 up to 300 GHz—we shall loosely refer to these as *microwave* frequencies. At microwave frequencies, even the shortest circuit connections must be carefully considered due to the extremely small wavelengths involved.

The thin-film hybrid and monolithic integrated circuits used at microwave frequencies are called microwave integrated circuits (MICs). Obviously the use of short chunks of coaxial transmission line or waveguides is not practical for the required connections of mass-produced miniature circuits. Instead, either a **stripline** or **microstrip** connection is often used. They are shown in Figure 31. They both lend themselves to mass-produced circuitry and can be thought of as a cross between waveguides and transmission lines with respect to their propagation characteristics.

**Stripline**
transmission line used at microwave frequencies that has two ground planes "sandwiching" a conducting strip

**Microstrip**
transmission line used at microwave frequencies that has one or two conducting strips over a ground plane

The stripline consists of two ground planes (conductors) that "sandwich" a smaller conducting strip with constant separation by a dielectric material (printed circuit board). The two types of microstrip shown in Figure 31 consist of either one or two conducting strips separated from a single ground plane by a dielectric. One conducting strip is analogous to an unbalanced transmission line. The two-conducting-strip version is analogous to a balanced transmission line. While stripline offers somewhat better performance due to lower radiation losses, the simpler and thus more economical microstrip is the prevalent construction technique.

In either case, the losses exceed those of either waveguides or coaxial transmission lines, but the miniaturization and cost savings far outweigh the loss considerations. This is especially true when the very short connection paths are considered.

As with waveguides and transmission lines, the characteristic impedances of stripline and microstrip are determined by physical dimensions and the type of dielectric. The most often used dielectric is alumina, with a relative dielectric

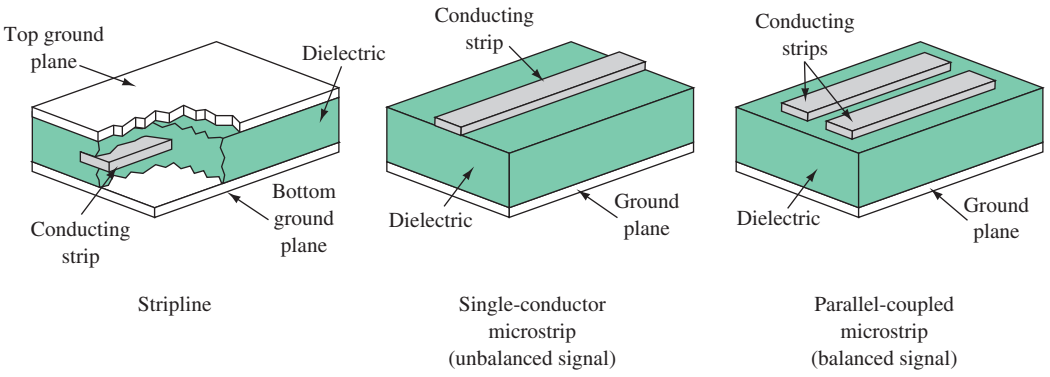


FIGURE 31 Stripline and microstrip.

constant of 9.6. Proper impedance matching, to minimize standing waves, is still an important consideration.

Figure 32 provides end views of the three lines. The formulas for calculating $Z_0$ for them are provided in the figure. In the formulas, ln is the natural logarithm and $\epsilon$ is the dielectric constant of the board.

## Microstrip Circuit Equivalents

Microstrip can be used to simulate circuit elements just as previously discussed for transmission lines and waveguides. The physical layout for some single-conductor microstrip simulations is shown in Figure 33. The series capacitance in Figure 33(c) shows that an actual break in the conductor is used. This concept can be extended to allow coupling between two microstrips by running the two conductors close together. The amount of coupling can be accurately controlled by the length and spacing of the parallel segments, as shown in Figure 33(f). The configuration in Figure 33(e) simulates a series *LC* circuit connected to ground. Almost any type of *LC* circuit can be fabricated with microstrip.

## Dielectric Waveguide

A more recent contender for "wiring" of miniature millimeter wavelength circuits is the **dielectric waveguide.** Its operation depends on the principle that two dissimilar dielectrics have a guiding effect on electromagnetic waves.

**Dielectric Waveguide**
a waveguide with just a dielectric (no conductors) used to guide electromagnetic waves

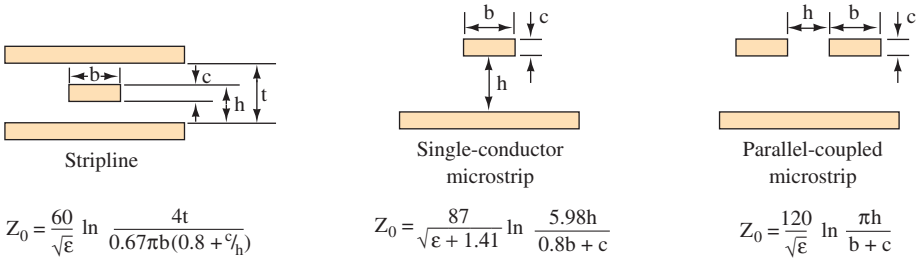


$$Z_0 = \frac{60}{\sqrt{\varepsilon}} \ln \frac{4t}{0.67\pi b(0.8 + {}^{c}/_{h})}$$

$$Z_0 = \frac{87}{\sqrt{\varepsilon + 1.41}} \ln \frac{5.98h}{0.8b + c}$$

$$Z_0 = \frac{120}{\sqrt{\varepsilon}} \ln \frac{\pi h}{b + c}$$

FIGURE 32 Characteristic impedance.

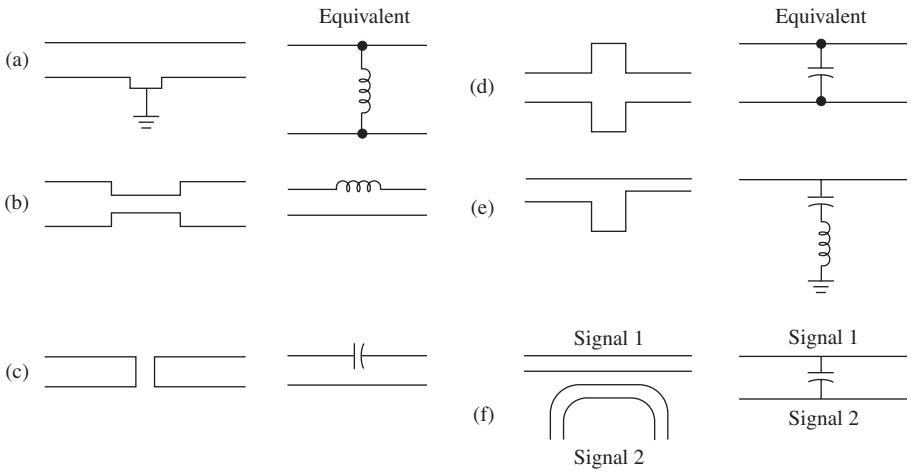


FIGURE 33 Microstrip circuit equivalents.

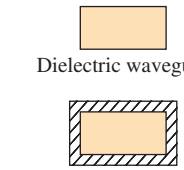


FIGURE 34 Dielectric waveguide and dielectric-filled waveguide.

The dielectric waveguide should not be confused with the dielectric-filled waveguide. Both are shown in Figure 34. A regular metallic waveguide is sometimes filled with dielectric because it decreases the size necessary to allow propagation of a given frequency.

The dielectric waveguide is obviously easy to mass-produce within integrated circuits and offers an advantage over microstrip. At frequencies above 20 to 30 GHz, the losses with microstrip become excessive for many system applications compared to the dielectric waveguide. For example, at 60 GHz microstrip typically attenuates 0.15 dB/cm, while the dielectric waveguide attenuates only 0.06 dB/cm. The figure for a standard rectangular waveguide at 60 GHz is about 0.02 dB/cm but would be used only in systems where cost is not a factor.

Alumina is commonly used as the dielectric material for dielectric waveguides. However, semiconductors such as silicon and gallanium arsenide (GaAs) will undoubtedly be the dielectrics used in the future. This is dictated by the fact that ultimately semiconductor devices will be fabricated directly into the dielectric waveguide.



## 12 TROUBLESHOOTING

After completing this section, you should be able to troubleshoot waveguide systems. Waveguide problems are very similar to ordinary transmission line problems. The test equipment may look different, but it is doing the same things.

A word of caution: Waveguide is commonly used to carry large amounts of microwave power. Microwaves are capable of burning skin and damaging eyesight. Never work on waveguide runs or antennas connected to a transmitter or radar until you are sure the system is off and cannot be turned on by another person.

After completing this section you should be able to

- Identify problems caused by joints and flanges
- Detect arcing problems

- Troubleshoot rotary joint failures
- Detect malfunctions by determining VSWR in the guide

## Some Common Problems

1. The joints or flanges between two waveguide sections are the most likely source of a problem. Waveguides are sometimes pressurized to increase the power rating of the guide and keep water out. Improperly fitted joints can let water in and gas out. Water raises the VSWR, which can damage most microwave tubes.

   There are two types of flanges: choke and cover. Choke flanges have a groove cut into the face of the flange to keep microwave energy from escaping. There is a second groove for a gasket. Cover flanges are simply smooth. Both must be clean and flat. The screws must be the correct size because they help align the two pieces and keep them tightly sealed together.
2. Arcs can occur at improperly fitted joints and actually burn holes in the guide. Arcs occur in the waveguide under high power if some component such as the antenna has failed. You might see evidence of an arc on the broad wall right in the center of the guide.
3. Worn-out components must be checked and replaced. Radar antennas generally have one or more rotary joints. Rotary joints have bearings and sometimes moving contacts. Rotary joints sometimes fail only after the transmitter has had time to heat them sufficiently. By the time the technician has opened the guide and installed test equipment, the joint will cool and test well. It is best to have a directional coupler in line while running the transmitter and watch for an increase in reflected power.

Rotary joints can also be tested on the bench by connecting the joint to a dummy load and measuring VSWR while turning the joint. Still, there is no substitute for the operational test.

Flexible waveguide is subject to cracking and corrosion. Normally, the loss of a two-foot-long piece of rigid waveguide is so low that the loss of the guide is extremely difficult to measure. A bad piece of flexible guide can usually be detected by connecting a dummy load to it and measuring VSWR while flexing the guide.

## Test Equipment

Figure 35 shows how to connect the test equipment for a VSWR test. First connect the power meter to the forward (incident) power coupler and note the reading. Then connect the power meter to the reflected coupler and note the reading.

Reflected power should be very low, and the VSWR should be nearly 1. VSWR is given by the following equation:

$$\text{VSWR} = \frac{1 + \sqrt{\frac{P_r}{P_i}}}{1 - \sqrt{\frac{P_r}{P_i}}} \tag{7}$$

where $P_i$ = incident power
$P_r$ = reflected power

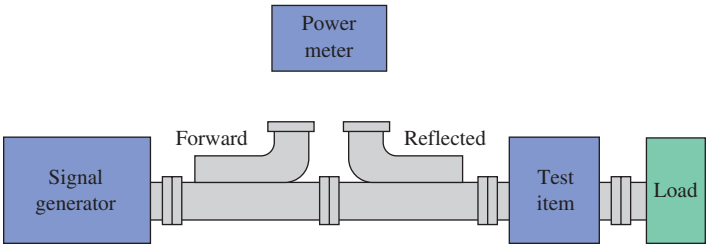


FIGURE 35 VSWR test.

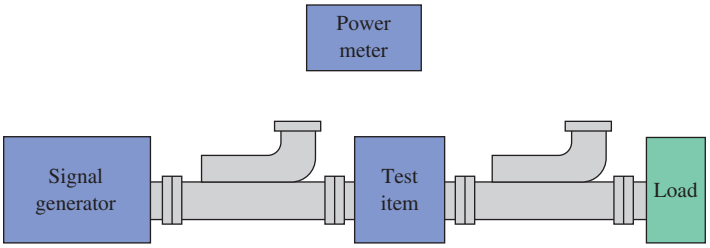


FIGURE 36 Loss test.

The same test equipment is used to measure loss by reversing the reflected coupler and putting the test item between the couplers, as shown in Figure 36. No two couplers are exactly alike, so you must first connect them together without the test item and determine the difference. You should be able to make the loss measurement to within 0.2 dB in this manner.

## 13 TROUBLESHOOTING WITH ELECTRONICS WORKBENCH™ MULTISIM

This Multisim exercise explores the properties of a lossy transmission line and a low-loss waveguide. Begin the exercise by opening **Fig15-37** at www.pearsoned.com/electronics. This circuit contains a sample waveguide attached to the network analyzer. The circuit is shown in Figure 37. Both ends of the waveguide are connected to the ports of the network analyzer. What results do you expect to see from the network analyzer?

Before starting the simulation, click on the network analyzer and change the number of points per decade to 200, the start frequency to 1 GHz, and the stop frequency to 2 GHz. This change provides a smoother plot of the simulation results and a realistic frequency range. Start the simulation and view the results on the network analyzer. You should see a result similar to the one shown in Figure 38.

The plot of the data is along the outside perimeter of the Smith chart, as it is in Figure 38. This indicates that the line is low-loss. Move the frequency marker on the network analyzer to 1 GHz. The input impedance of the waveguide at 1 GHz is

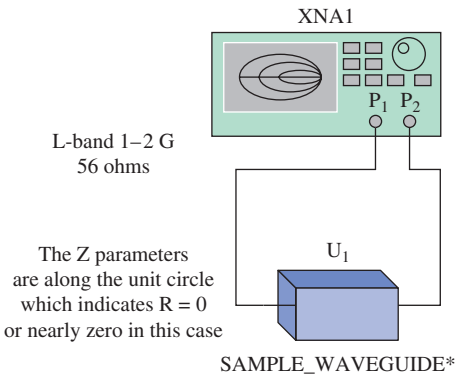


FIGURE 37 The circuit example of a low-loss waveguide section connected to a network analyzer.

$Z_{11} = 0.0040 - j0.2027$ or very little resistive loss. Double-click on the waveguide section and then click on **Edit Model.** You should see an $R = 5.543\text{e-}001$, which is telling us that this waveguide has about 0.55-Ω of resistance per meter. Look at the **LEN** value in the model, which is the specification for the length (in meters) of the section we are analyzing. For this example, the length is 0.012 m **(LEN = 1.200e-002).** Change the value of LEN to 1.200. Click on **Change Part Model** and then click on **OK.** Restart the simulation and compare this result with the previous example. You may need to change the setup on the network analyzer to sweep from

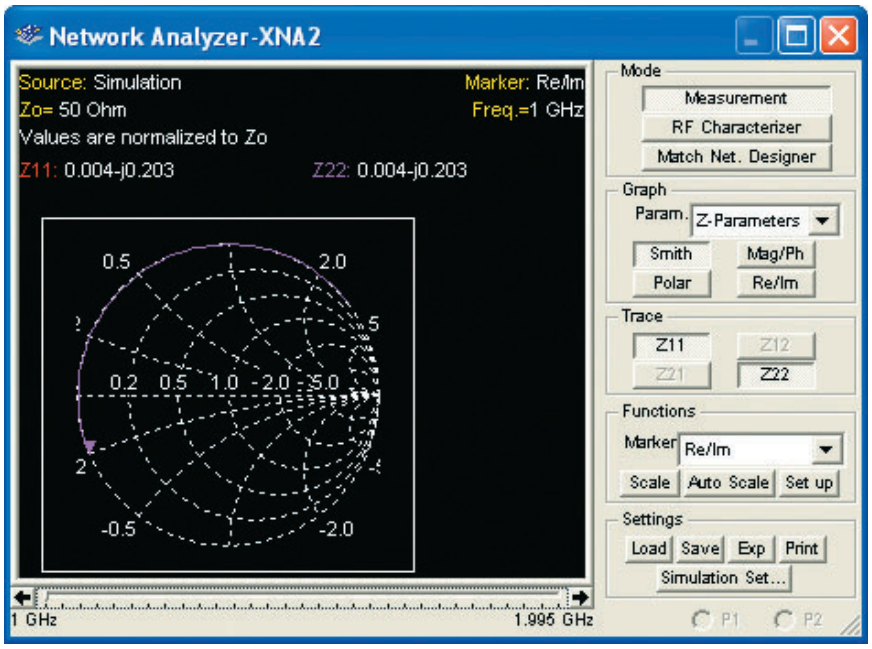


FIGURE 38 The simulation of a low-loss waveguide as viewed with the network analyzer.

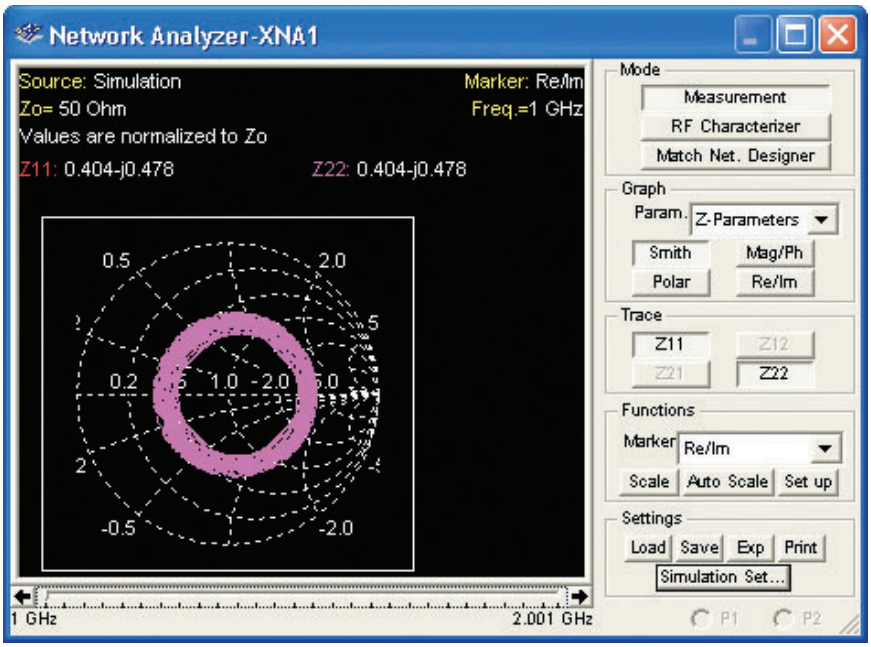


FIGURE 39 The simulation of a very lossy waveguide.

1 to 2 GHz and change the number of data points to 800. The result of the simulation is shown in Figure 39.

There is an obvious difference in Figures 38 and 39. Figure 39 is showing a very lossy waveguide. Electronics Workbench™ Multisim also provides a model of a lossy transmission line. Open the file **Fig15-40.** The new circuit with the lossy transmission line model is shown in Figure 40.

Change the setup on the network analyzer to display 200 points per decade, sweep from 1 to 2 GHz, and start the simulation. The network analyzer should show

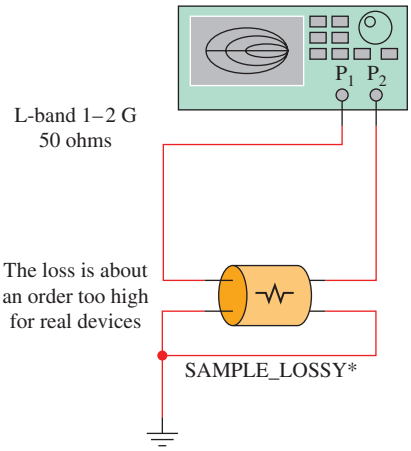


FIGURE 40 An example of a test on the Multisim sample lossy transmission line.

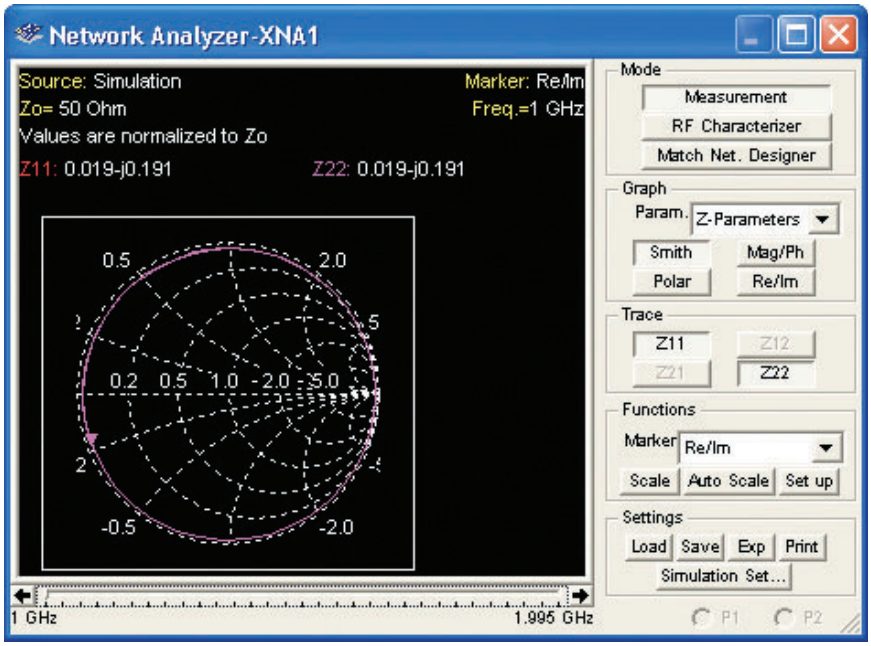


FIGURE 41 The simulation results of the lossy transmission line provided by EWB Multisim.

a result similar to that shown in Figure 41. This result does not show as lossy a transmission line as the one shown in Figure 39. However, this result is not as good as the one shown in Figure 38.

This material has demonstrated how to identify a lossy or low-loss waveguide or transmission line using the Multisim network analyzer. The Multisim exercises in this chapter provide the opportunity to test your ability to identify these characteristics in waveguide or transmission lines. Refer back to the figures in this example as needed to confirm your observations.

## Electronics Workbench™ Exercises

1. Open the file **FigE15-1** at www.pearsoned.com/electronics. Three microstrip transmission lines are shown. Use the techniques described in the text to determine which microstrip has the greatest loss. (B)
2. Open the file **FigE15-2** at www.pearsoned.com/electronics. Use the Bode plotter to determine the first resonant frequency of the sample waveguide. *Hint:* The first resonant frequency is at the point where the signal reaches a maximum level. Run the Bode plot and view the results. You will see the first maximum point. (1.123 GHz)
3. Open the file **FigE15-3** at www.pearsoned.com/electronics. Determine the normalized impedance of the waveguide at 1.122 GHz and at 226.4 MHz. What would you conclude about the waveguide at these frequencies? ($0.0100 - j0.0081$, $0.074 - j3.487$)



## Summary

This chapter we studied waveguides and radar. We discovered that waveguides can be derived from transmission line analysis and are capable of handling large amounts of power. The major topics you should now understand include:

- the comparison of transmission via waveguides, antennas, and transmission lines
- the analysis of waveguide operation and mode designations
- the description and use of rectangular, circular, ridged, and flexible waveguides
- the application of waveguide bends, twists, tees, and tuners
- the calculation of characteristic impedance for waveguides
- the techniques of waveguide terminations and variable attenuators
- the description and application of directional couplers
- the analysis of coupling waveguide energy using probes, loops, or apertures
- the description and applications for cavity resonators
- the calculation of radar range
- the operational description of radar parameters' maximum range, minimum range, duty cycle, and Doppler effect
- the construction and application of stripline, microstrip, and dielectric waveguides

## Questions and Problems

### Section 1

1. Discuss the relative merits and drawbacks of using antennas, waveguides, and transmission lines as the media for a communications link.

### Section 2

2. Provide a broad definition of a waveguide. What is normally meant by the term *waveguide*?
3. Explain the basic difference between propagation in a waveguide versus a transmission line.
4. Explain why the different mode configurations are termed *transverse electric* or *transverse magnetic*.
5. What are the *modes* of operation for a waveguide? Explain the subscript notation for TE and TM modes.
6. What is the *dominant mode* in rectangular waveguides? What property does it have that makes it dominant? Show a sketch of the electric field at the mouth of a rectangular waveguide carrying this mode.
7. Describe the significance of the cutoff wavelength.
8. A rectangular waveguide is 1 cm by 2 cm. Calculate its cutoff frequency, $f_{co}$. (7.5 GHz)
9. How does energy propagate down a waveguide? Explain what determines the angle this energy makes with respect to the guide's sidewalls.
10. For $TE_{10}$, $a = \lambda/2$. What is $a$ for $TE_{20}$? (Assume a rectangular waveguide.)

## Section 3

11. Why is the velocity of energy propagation usually significantly less in a waveguide than in free space? Calculate this velocity ($V_g$) for an X-band waveguide for a 10-GHz signal. Calculate guide wavelength ($\lambda_g$) and phase velocity ($V_p$) for these conditions. ($2.26 \times 10^8$ m/s, 3.98 cm, $3.98 \times 10^8$ m/s)
12. Why are free-space wavelength ($\lambda$) and guide wavelength ($\lambda_g$) different? Explain the significance of this difference with respect to Smith chart calculations.
*13. Why are rectangular cross-sectional waveguides generally used in preference to circular cross-sectional waveguides?

## Section 4

14. Why are circular waveguides used much less than rectangular ones? Explain the application of a circular rotating joint.
15. Describe the advantages and disadvantages of a ridged waveguide.
16. Describe the physical construction of a flexible waveguide, and list some of its applications.
17. Describe some advantages a ridged waveguide has over a rectangular waveguide.

## Section 5

18. List some of the causes of waveguide attenuation. Explain their much greater power handling capability as compared to coaxial cable of similar size.
*19. Describe briefly the construction and purpose of a waveguide. What precautions should be taken in the installation and maintenance of a waveguide to ensure proper operation?
20. Why are waveguide bend and twist sections constructed to alter the direction of propagated energy gradually?
21. Describe the characteristics of shunt and series tee sections. Explain the operation of a hybrid tee when it is used as a TR switch.
22. Discuss several types of waveguide tuners in terms of function and application.

## Section 6

23. Verify the characteristic wave impedance of 405 Ω for the data given in Problem 59.
24. Calculate the characteristic wave impedance for an X-band waveguide operating at 8, 10, and 12 GHz. (663 Ω, 501 Ω, 450 Ω)
25. Explain various ways of terminating a waveguide to minimize and maximize reflections.
26. Describe the action of flap and vane attenuators.

## Section 7

27. Describe in detail the operation of a directional coupler. Include a sketch with your description. What are some applications for a directional coupler? Define the *coupling* of a directional coupler.
28. Calculate the coupling of a directional coupler that has 70 mW into the main guide and 0.35 mW out the secondary guide. (23 dB)

---

* An asterisk preceding a number indicates a question that has been provided by the FCC as a study aid for licensing examinations.

## Section 8

29. Explain the basics of capacitively coupling energy into a waveguide.
30. Explain the basics of inductively coupling energy into a waveguide.
31. What is slot coupling? Describe the effect of varying the position of the slot.
*32. Discuss the following with respect to waveguides:
    (a) Relationship between frequency and size.
    (b) Modes of operation.
    (c) Coupling of energy into the waveguide.
    (d) General principles of operation.
33. What is a cavity resonator? In what ways is it similar to an *LC* tank circuit? How is it dissimilar?
*34. Explain the operating principles of a cavity resonator.
*35. What are waveguides?
36. Describe a means whereby a cavity resonator can be used as a waveguide frequency meter.
37. Explain three methods of tuning a cavity resonator.

## Section 9

*38. Explain briefly the principle of operation for a radar system.
*39. Why are waveguides used in preference to coaxial lines for the transmission of microwave energy in radar installations?
40. With respect to a radar system, explain the following terms:
    (a) Target.
    (b) Echo.
    (c) Pulse repetition rate.
    (d) Pulse repetition time.
    (e) Pulse width.
    (f) Rest time.
    (g) Range.
41. Calculate the range in miles and meters for a target when $\Delta t$ is found to be 167 $\mu$s. (13.5 mi, 25,050 m)
*42. What is the distance in nautical miles to a target if it takes 123 $\mu$s for a radar pulse to travel from the radar antenna to the target and back to the antenna, and be displayed on the PPI scope? (10 mi)
43. What are double range echoes?
44. Why does a radar system have a minimum range? Calculate the minimum range for a system with a pulse width of 0.5 $\mu$s.
45. In detail, discuss the various implications of duty cycle for a radar system.
*46. What is the peak power of a radar pulse if the pulse width is 1 $\mu$s, the pulse repetition rate is 900, and the average power is 18 W? What is the duty cycle? (20 kW, 0.09%)
47. For the radar block diagram in Figure 26, explain the function of each section.
48. A police radar speed trap functions at a frequency of 1.024 GHz in direct line with your car. The reflected energy from your car is shifted 275 Hz in frequency. Calculate your speed in miles per hour. Are you going to get a ticket? (90 mph, *yes!*)
49. What is the Doppler effect? What are some other possible uses for it other than police speed traps?
50. Why is a Doppler radar often called a CW radar?

## Section 10

51. Define the term *backscatter*.
52. What are the three parameters that define an RFID system?
53. Explain how power is provided to a passive RFID tag.
54. Explain why some RFID tags (inlays) incorporate dual-dipole antennas.
55. Cite three advantages for using an active RFID tag.
56. What are the three frequency bands typically used for RFID tags?

## Section 11

57. Using sketches, explain the physical construction of stripline, single-conductor microstrip, and parallel-coupled microstrip. Discuss their relative merits, and also compare them to transmission lines and waveguides.
58. What is a dielectric waveguide? Discuss its advantages and disadvantages with respect to regular waveguides.
59. Calculate $Z_0$ for stripline constructed using a circuit board with a dielectric constant of 2.1, $b = 0.1$ in., $c = 0.006$ in., and $h = 0.08$ in. The conductor is spaced equally from the top and bottom ground planes. (50 Ω)
60. Make a sketch of a single-conductor microstrip that simulates an inductor to ground followed by a series capacitance.

## Section 12

61. Describe the proper procedure for troubleshooting waveguides.
62. Explain how to prevent arcs.
63. Explain where problems are most likely to occur with waveguides and describe a process to prevent these problems.
64. Describe how to test a waveguide.

## Questions for Critical Thinking

65. A 9-GHz signal is operating in the dominant mode in a rectangular waveguide 3 by 4.5 cm. The characteristic (wave) impedance is 405 Ω. Provide a report that includes the $\lambda_g$, $\lambda$, $V_g$, and $V_p$ for this system; the SWR that would be caused by a horn antenna load of 350 Ω + $j$100 Ω; and the impedance in the guide 4 cm from the antenna load. Include a Smith chart analysis with the report.
66. Can a hybrid tee be used to feed the first stage of a microwave receiver (the mixer—no RF stage) with the antenna signal and local oscillator signal without any local oscillator radiation off the receiving antenna? Provide a sketch to illustrate.
67. Analyze the relationship between multiple targets and *maximum range*. Use the calculated maximum unambiguous range for a radar system with PRT equal to 400 μs to illustrate.
68. You must use a directional coupler to measure VSWR and to determine the loss introduced by a device in a waveguide system. Describe the tests you will use and how they differ from each other.

*This page intentionally left blank*

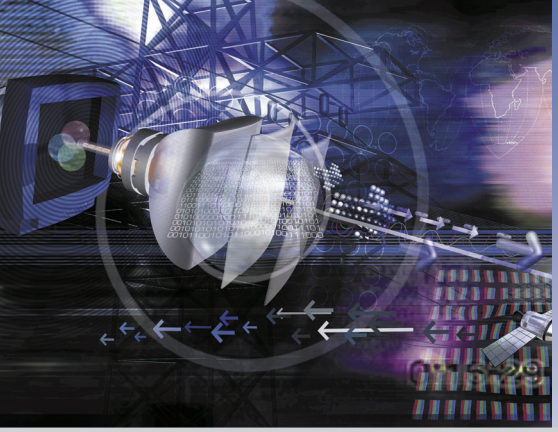

# GLOSSARY

**acoustic coupler** supports a telephone handpiece and uses sound transducers to send and receive audio tones

**acquisition time** amount of time it takes for the hold circuit to reach its final value

**ACR** manufacturer combined measurement of attenuation and crosstalk. A large ACR indicates greater bandwidth

**active attack** the bad guy is transmitting an interfering signal disrupting the communications link

**AC3** the Dolby laboratory's audio compression technique for digital television

**ADSL** provision of up to 1.544 Mbps from the user to the service provider and up to 8 Mbps back to the user from the service provider

**advanced mobile phone service (AMPS)** cellular mobile radio that uses 12-kHz peak deviation channels, which are spaced 30-kHz apart in the 800–900-MHz band

**Advanced Television Systems Committee (ATSC)** developed to make recommendations for advanced television in the United States

**air interface** used by PCS systems to manage the transfer of information

**algorithms** a plan or set of instructions to achieve a specific goal

**alias frequency** an undesired frequency produced when the Nyquist sampling rate is not attained

**aliasing** errors that occur when the input frequency exceeds one-half the sample rate

**aliasing distortion** the distortion that results if Nyquist criteria are not met in a digital communications system using sampling of the information signal; the resulting alias frequency equals the difference between the input intelligence frequency and the sampling frequency

**AMI** alternate mark inversion

**amplitude companding** process of volume compression before transmission and volume expansion after detection

**amplitude compandored single sideband (ACSSB)** sideband transmission with speech compression in the transmitter and speech expansion in the receiver

**amplitude modulation (AM)** the process of impressing low-frequency intelligence onto a high-frequency carrier so that the instantaneous changes in the amplitude of the intelligence produce corresponding changes in the amplitude of the high-frequency carrier

**anechoic chamber** a large enclosed room that prevents reflected electromagnetic waves and shields out interfering waves from the outside world; used for radiation measurements

**angle modulation** superimposing the intelligence signal on a high-frequency carrier so that its phase angle or frequency is altered as a function of the intelligence amplitude

**antenna** a device that generates and/or collects electromagnetic energy

**antenna array** group of antennas or antenna elements arranged to provide the desired directional characteristics

**antenna coupler** an impedance matching network in the output stage of an RF amplifier or transmitter that ensures maximum power is transferred to the antenna by matching the input impedance of the antenna to the output impedance of the transmitter

**antenna gain** a measure of how much more power in dB an antenna will radiate in a certain direction with respect to that which would be radiated by a reference antenna, i.e., an isotropic point source or dipole

**antialiasing filter** a sharp-cutoff low-pass filter used to make sure no frequencies above one-half the sampling rate reach the ADC converter

**aperture time** the time that the S/H circuit must hold the sampled voltage

**apogee** farthest distance of a satellite's orbit to earth

From *Modern Electronic Communication*, Ninth Edition, Jeffrey S. Beasley, Gary M. Miller. Copyright © 2008 by Pearson Education, Inc. Published by Prentice Hall. All rights reserved.

**Armstrong transmitter** FM transmitter that uses a phase modulator to feed the intelligence signal through a low-pass filter integrator network to convert PM to FM

**array** a group of antennas or antenna elements arranged to provide the desired directional characteristics

**ASCII (American Standard Code for Information Interchange)** a standardized coding scheme for alphanumeric symbols

**aspect ratio** in a television picture, the ratio of frame width distance to frame height distance; in the United States, it is standardized at 4/3, HDTV is at 16/9

**asymmetric operation** a term used to describe the modem connection when the data transfer rates to and from the service provider differ

**asynchronous** a mode of operation implying that the transmit and receiver clocks are not locked together and the data must provide start and stop information to lock the systems together temporarily

**asynchronous system** the transmitter and receiver clocks free-run at approximately the same speed

**asynchronous transfer mode (ATM)** a cell relay network designed for voice, data, and video traffic

**ATM** asynchronous transfer mode; a cell relay network designed for voice, data, and video traffic

**atmospheric noise** external noise caused by naturally occurring disturbances in the earth's atmosphere

**ATSC pilot carrier** provides a clock for the 8VSB receiver to lock onto

**attenuation** the loss of power as a signal propagates through a medium such as copper, fiber, and free space

**attenuation distortion** in telephone lines, the difference in gain at some frequency with respect to a reference tone of 1004 Hz

**availability of the network** describes if a communication link is being disrupted

**attitude controls** used for orbital corrections (station keeping) on the satellite

**aural signal** sound or audio portion of a TV signal, transmitted by frequency modulation

**authentication** requires proving who you say you are

**autodyne mixer** another name for self-excited mixer

**automatic frequency control** negative feedback control system in FM receivers used to achieve stability of the local oscillator

**automatic gain control (AGC)** the function in a receiver that allows weak RF signals to be amplified to a high degree and strong RF signals to be amplified to a lesser degree so that a near constant output level is produced

**auxiliary AGC diode** reduces receiver gain for very large signals

**backhoe fading** total loss of data flow because the cable was dug up by a backhoe

**back porch** interval just after the horizontal sync pulse appears on the blanking pulse in a TV receiver

**backscatter** refers to the reflection of the radio waves striking the RFID tag and reflecting back to transmitter source

**backward-wave oscillator** TWT that allows both forward and backward waves and can therefore be used as an oscillator

**balanced line** the same current flows in each of two wires but 180° out of phase

**balanced mode** neither wire in the wire pairs connects to ground

**balanced modulator** modulator stage that mixes intelligence with the carrier to produce both sidebands with the carrier eliminated

**balanced ring modulator** balanced modulator design that connects four matched diodes in a ring configuration

**balanced transmission line** parallel conductors, such as open wire feedline, that carry two equal but opposite phase electrical signals with respect to ground

**baluns** circuits that convert between balanced and unbalanced operation

**Barkhausen criteria** two requirements for oscillations: loop gain must be at least unity and loop phase shift must be zero degrees

**baseband** the signal is transmitted at its base frequency with no modulation to another frequency range

**base modulation** a modulation system in which the intelligence is injected into the base of a transistor

**base station** generates the signal that enables communication between the mobile and the phone system

**Baudot code** fairly obsolete coding scheme for alphanumeric symbols

**baud rate** symbol rate

**BCC** block check code, the code generated when creating the CRC transmit code

**beamwidth** the angular separation between the half-power points on an antenna's radiation pattern

**B8ZS** bipolar 8 zero substitution

**Bessel functions** mathematical functions used for determining the exact bandwidth of an FM signal

**binary phase-shift keying (BPSK)** a form of phase shift keying in which the binary "1" and "0" states are represented as no phase shift or phase inversion of the carrier signal

**biphase code** an encoding format for PCM systems that is popular for use with optical systems, satellite telemetry links, and magnetic recording systems

**bipolar coding** successive 1s are represented by pulses in the opposite voltage direction

**bipolar violation** the pulse is in the same voltage direction as the previous pulse

**bit** unit of information required to allow proper selection of one out of two equally probable events

**bit error rate** similar to error probability; the number of bit errors that occur for a given number of bits transmitted

**bit stuffing** another name for character insertion

**block check character** method of error detection involving sending a block of data, then an end of message indicator, then a block check character representing characteristics of the data that was sent

**BORSCHT** the functions produced on subscriber loop interface circuits in PBX or central office systems; these functions are Battery feeding, Overvoltage protection, Ringing, Supervision, Coding, Hybrid, and Testing

**bps** bits per second

**broadcast address** setting the destination MAC address to all 1s broadcasts the message to all computers on the LAN

**bucket brigade** the process of serially shifting data out of a CCD

**buffer amplifier** an amplifier designed to prevent any amplitude or frequency loading from occurring; it typically has a very high input impedance and low input capacitance to remove any amplitude reduction or frequency drifting of the desired signal being amplified

**Burst ES** a measurement based on the intermittent or bursty errors

**bursty** a state in which the data rates can momentarily exceed the leased data rate of the service

**Butterworth filter** a constant-*k* type of *LC* filter

**cable modems** use of the high bandwidth of the cable television system to deliver high-speed data to and from the service provider

**cables** optical fibers that have a protective covering

**capture effect** an FM receiver phenomenon that involves locking onto the stronger of two received signals of the same frequency and suppressing the weaker signal

**capture range** the range of applied input frequencies to a PLL that will cause it to lock up

**capture ratio** the necessary difference (in dB) of signal strength to allow suppression of a weaker signal from a stronger one in FM systems

**capture state** when the phase comparator of a PLL generates a signal that forces the VCO to equal the input frequency

**carrier** a radio wave of constant amplitude, frequency, and phase at the frequency of operation for the radio, television, or other type of communication system; this radio wave's amplitude, frequency, or phase is altered by an information signal so that it can carry the information to a distant receiver

**carrier feed through** a measure of the amount of unmodulated carrier that "leaks through" to the output signal

**carrier leakthrough** the amount of carrier not suppressed by the balanced modulator

**carrier sense, multiple access with collision detection** a channel access method where users "listen" for an opening to make a transmission

**Carson's rule** equation for approximating the bandwidth of an FM signal

**Cassegrain feed** a method of feeding a paraboloid antenna by using a secondary reflector

**cathode ray tube (CRT)** a vacuum tube in which the electron can be focused in a small spot on a fluorescent screen at the opposite end of the structure; used in television receivers and oscilloscopes to form the display

**CAT6/5e** category 6 and category 5e computer networking cable capable of handling 1000 MHz bandwidth up to a length of 100 m

**cavity resonator** metal-walled chambers in microwave installations fitted with devices for admitting and extracting electromagnetic energy

**CDMA** code division multiple access; each station uses a different binary sequence to modulate the same carrier

**CDMA2000** a 3G wireless development popular in the United States

**cell sites** a regular array of transmitter-receiver stations

**cell splitting** for cellular phones, if all traffic in a given cell increases beyond a reasonable capacity, the cell is split into smaller coverage areas

**cellular telephone** modern mobile telephone system characterized by a network of cell sites, each serving a hexagon-shaped coverage area, and automatic switching of service from one cell site to another as the mobile customer travels from one coverage area to another

**centralized network** a basic network configuration

**central office** a telephone exchange on phone company property that simply switches one telephone line to another so that phone calls can be made

**ceramic filter** a filter network made from lead zirconate-titanate that exhibits the piezoelectric effect and makes effective filters to convert DSB-SC to SSB in an SSB transmitter

**channel** a band of frequencies

**channel access** how a user gets control of a channel to allow transmission

**channel branding** allows the station to maintain its channel identification even though the digital signal is being transmitted on another channel

**channel guard** in a transceiver, causing a specific audio frequency to be encoded onto the carrier together with the audio

**character insertion** insertion of a bit or character so that a data stream is not mistaken for a control character

**character stuffing** another name for character insertion

**characteristic impedance** the input impedance of a transmission line either infinitely long or terminated in a pure resistance exactly equal to its characteristic impedance

**characteristic wave impedance** characteristic impedance of a waveguide; affected by the frequency of operation

**charge couple device (CCD)** a light-sensitive device used to convert optical images to an electronic form

**chips** in the transmission of digital bits, pulses shorter than the message bits

**chroma** the color signals I and Q

**chromatic dispersion** broadening of a pulse due to the different propagation rates of the spectral components of the light

**circular horn** type of horn antenna that provides radiation from a circular waveguide

**citizen's band** a radio service for personal communication; often used by truck drivers during interstate highway travel

**cladding** the material surrounding the core of an optical waveguide; the cladding must have a lower index of refraction to keep the light in the core

**Clapp oscillator** a Colpitts oscillator having a third capacitor in series with its inductor in order to produce a more stable output frequency

**cliff effect** threshold of visibility for a DTU signal meaning this is the point where the receiver won't lock to the incoming digital data

**clipper** another name for sync separator

**coaxial cable** two conductors, a center conductor and an outer shield, separated by a dielectric at a fixed distance from one another; provides for minimal noise pickup and minimal radiation

**codec** a single LSI chip containing both the ADC and DAC circuitry

**code-division multiple-access (CDMA)** communications system in which spread-spectrum techniques are used to multiplex more than one signal within a single channel

**coding** transforming messages or signals in accordance with a definite set of rules

**coefficient of reflection** ratio of the reflected electric field intensity divided by the incident intensity

**COFDM** OFDM with channel coding

**coherent** light that is spectrally pure

**collinear array** any combination of half-wave elements in which all the elements are excited by a connected transmission line

**color burst** eight-cycle sine-wave burst that occurs on the back porch of the horizontal sync pulse in a color TV broadcast signal

**color killer** circuit that prevents output from the chroma circuits during a monochrome broadcast

**Colpitts oscillator** a popular *LC* oscillator, easily recognized by its two capacitors providing the positive feedback path for oscillation

**committed burst information rate (CBIR)** enables subscribers to exceed the committed information rate (CIR) during times of heavy traffic

**committed information rate** the guaranteed data rate or bandwidth to be used in the frame relay connection

**common mode rejection** when signals that are 180° out of phase cancel each other

**compandor** compress/expand; to provide better noise performance, a variable-gain circuit at the transmitter increases its gain for low-level signals; a complementary circuit in the receiver reverses the process to restore the original signal

**confetti** colored noise on the screen of a color receiver during a black-and-white transmission

**confidentiality** means that you want to keep unauthorised people from gaining access to your information

**constant-*k* filter** filter whose capacitive and inductive reactances are equal to a constant value *k*

**constellation pattern** display used to monitor QAM data signals on an oscilloscope to provide information on linearity and noise

**continuously variable slope delta (CVSD)** increasing the step-size in a delta modulation system when three or more consecutive ones or zeros occur

**continuous wave** a type of transmission where a continuous sinusoidal waveform is interrupted to convey information

**convergence** in a multibeam cathode-ray tube, a condition in which the beams are adjusted so that they all cross at a specific point; in color television, an alignment procedure used to form the clearest image

**conversion frequency** another name for the carrier in a balanced modulator

**conversion loss** the change in signal level from the RF frequency to the IF frequency

**converters** another name for mixers

**converter stage** a stage that serves the purpose of converting one frequency into another

**core** the portion of the fiber strand that carries the light

**corona discharge** luminous discharge of energy by an antenna caused by ionization of the air around the surface of the conductor

**cosmic noise** space noise originating from stars other than the sun

**counter measures** often use cryptography to protect the transmitted data from eavesdropping

**counterpoise** reflecting surface of a monopole antenna if the actual earth ground cannot be used; a flat structure of wire or screen placed a short distance above ground with at least a quarter-wavelength radius

**critical angle** the highest angle with respect to a vertical line at which a radio wave of a specified frequency can be propagated and still be returned to the earth from the ionosphere

**critical frequency** the highest frequency that will be returned to the earth when transmitted vertically under given ionospheric conditions

**critical value** in a magnetron, when the magnetic field reaches a value great enough to cause electrons to just miss the plate and return to the filament in a circular orbit

**Crosby systems** FM systems using direct FM modulation with AFC to control for carrier drift

**cross-modulation** distortion that results from undesired mixer outputs

**crosstalk** unwanted coupling caused by overlapping electric and magnetic fields

**crystal filter** a crystal network commonly used to provide high-*Q* filtering

**crystal-lattice filter** filter containing at least two but usually four crystals

**crystal oscillator** an oscillator that uses a piezoelectric crystal in place of the inductor to produce a stable output frequency

**CSMA/CA** carrier sense multiple access with collision avoidance; the protocol used by wireless LANs

**CSMA/CD** the Ethernet LAN protocol carrier sense multiple access with collision detection

**CSU/DSU** channel service unit/data service unit, providing the data interface to the communications carrier providing framing and line management

**cyclic prefix** the end of a symbol is copied to the beginning of the data stream, thereby increasing its overall length and thus removing any gaps in the data transmission

**cyclic redundancy check** method of error detection involving performing repetitive binary division on each block of data and checking the remainders

**damped** the gradual reduction of a repetitive signal due to resistive losses

**damper** a diode in the high-voltage oscillator of a TV receiver that shorts out unwanted damped oscillations during the flyback period

**DAMPS (digital advanced mobile phone service)** the digital system for mobile phone service

**dark current** the very little current that flows when a *pn* junction is reverse-biased and under dark conditions

**data bandwidth compression** in QPSK transmission, the compression of more data into the same available bandwidth as compared to BPSK

**data communications equipment** refers to peripheral computer equipment such as a modem, printer, mouse, etc.

**data encapsulation** properly formatting the data for transport over a serial communications line

**data interleaver** scrambles the order of the 8VSB data stream

**data randomizer** used to make the 8VSB data stream to be completely random

**data terminal equipment** refers to a computer, terminal, personal computer, etc.

**dB** decibel

**dBd** antenna gain relative to a dipole antenna

**dBi** antenna gain relative to an isotropic radiator

**dBm** a method of rating power or voltage levels with respect to 1 mW of power

**dBm(50)** a measurement made using a 1-mW reference with respect to a 50-Ω load

**dBm(75)** a measurement made using a 1-mW reference with respect to a 75-Ω load

**dBm(600)** decibel measurement using a 1-mW reference with respect to a 600-Ω load

**dB(V)** dB value measured relative to a 1-V reference

**dBW** a measurement made using a 1-W reference

**DCCH** digital control channel

**dc restoration** process of restoring the dc portion of the video signal that is often removed by amplifier coupling

**decade** a range of frequencies in which the upper limit is ten times as large as the lower limit

**deemphasis** process in an FM receiver that reduces the amplitudes of high-frequency audio signals down to their original values to counteract the effect of the preemphasis network in the transmitter

**delay distortion** when various frequency components of a signal are delayed different amounts during transmission

**delayed AGC** an AGC that does not provide gain reduction until an arbitrary signal level is attained

**delay equalizer** an *LC* filter that removes delay distortion from signals on phone lines by providing increased delay to those frequencies least delayed by the line, so that all frequencies arrive at nearly the same time

**delay line** a length of a transmission line designed to delay a signal from reaching a point by a specific amount of time

**delay skew** measure of the difference in time for the fastest to the slowest pair in a UTP cable

**delta match** an impedance matching device that spreads the transmission line as it approaches the antenna

**delta modulation** digital modulation technique in which the encoder transmits information regarding whether the analog information increases or decreases in amplitude

**demodulation** process of removing intelligence from the high-frequency carrier in a receiver

**demultiplexer (DMUX)** a device that recovers the individual groups of data from the TDMA serial data stream

**dense wave division multiplexing (DWDM)** incorporation of the propagation of several wavelengths in the 1550-nm range of a single fiber

**despread** return the DSSS signal back to its original modulated format

**deviation constant** definition of how much the carrier frequency will deviate for a given modulating input voltage level

**deviation ratio (DR)** the maximum possible frequency deviation divided by the maximum input frequency

**device under test** an electronic part or system that is being tested

**D4 framing** the original data framing used in T1 circuits

**diagonal clipping** distortion that occurs in a diode detector if the time-constant of the low-pass filter is set too high

**dibits** data sent two bits at a time
**dielectric waveguide** a waveguide with just a dielectric (no conductors) used to guide electromagnetic waves
**difference equation** makes use of the present digital sample value of the input signal along with a number of previous input values and possibly previous output values to generate the output signal
**differential GPS** a technique where GPS satellite clocking corrections are transmitted so that the position error can be minimized
**differentiator** a high-pass filter
**diffraction** the phenomenon whereby waves traveling in straight paths bend around an obstacle
**digital communication** the transfer of information from transmitter to receiver by representing it in a digital format before it is transmitted and then converting it back to its original form after it is detected by the receiver
**digital on-channel repeater (DOCR)** a device that allows for the retransmission of the DTV signal on the same channel
**digital signal processing** using programming techniques to process a signal while in digital form
**diode detector** the simplest method for detecting an AM signal, consisting of a diode in series with a low-pass filter
**diplexer** filter in a TV transmitter that allows both the video AM signal and the audio FM signal to feed the same antenna
**dipole antenna** straight radiator one half-wavelength long, usually separated at the center by an insulator and fed by a balanced transmission line
**direct digital synthesis** frequency synthesizer design that has better repeatability and less drifting but limited maximum output frequencies, greater phase noise, and greater complexity and cost
**directional** concentrating antenna energy in certain directions at the expense of lower energy in other directions
**directional coupler** a device that senses how much signal is moving in one direction in a transmission line or waveguide
**director** the parasitic element that effectively directs energy in the desired direction
**discriminator** stage in an FM receiver that creates an output signal that varies as a function of its input frequency; recovers the intelligence signal
**dispersion** the broadening of a light pulse as it propagates through a fiber strand
**dispersion compensating fiber** acts like an equalizer canceling dispersion effects and yielding close to zero dispersion in the 1550-nm region
**dissipation** inverse of quality factor
**distributed feedback laser (DFB)** a more stable laser suitable for use in DWDM systems
**distributed network** an interconnection of more than one centralized network
**dit** decimal digit
**diversity reception** transmitting and/or receiving several signals and either adding them together at the receiver or selecting the best one at any given instant
**DMT (discrete multitone)** an industry standard data-modulation technique used by ADSL that uses the multiple subchannel frequencies to carry the data
**Dolby system** advanced noise reduction system in FM systems in which the preemphasis and deemphasis networks work in a dynamic manner
**Doppler effect** phenomenon whereby the frequency of a reflected signal is shifted if there is a relative motion between the source and the reflecting object
**double conversion** superheterodyne receiver design with two separate mixers, local oscillators, and intermediate frequencies
**double range echoes** echoes produced when the reflected beam makes a second trip
**double-sideband suppressed carrier** output signal of a balanced modulator
**double-stub tuner** has fixed stub locations, but the position of the short circuits is adjustable to allow a match between line and load
**downlink** a satellite sending signals to earth
**downlink budget** a measure of the signal level from the satellite to the earth station
**downward modulation** the decrease in dc output current in an AM modulator usually caused by low excitation
**driven array** multi-element antenna in which all the elements are excited through a transmission line
**driver amplifier** amplifier stage that amplifies a signal prior to reaching the final amplifier stage in a transmitter
**DSL** a digital subscriber line
**DSSS** direct sequence spread spectrum
**DTV** digital television
**dual-band** a phone operating in two different bands
**dummy antenna** resistive load used in place of an antenna to test a transmitter without radiating the output signal
**DUT** device under test
**duty cycle** the ratio of pulse width to pulse repetition time
**dwell time** the time each carrier spends at a specific frequency
**dynamic convergence** beam convergence away from the center of a CRT
**dynamic range** in a PCM system, the ratio of the maximum input or output voltage level to the smallest voltage level that can be quantized and/or reproduced by the converters; for a receiver, the decibel difference between the largest tolerable receiver input level and its sensitivity (smallest useful input level)

**earth station** the satellite uplink and downlink
**EBCDIC** standardized coding scheme for alphanumeric symbols
$E_b/N_o$ the bit energy to noise ratio

**echo signal** part of the returning radar energy collected by the antenna and sent to the receiver

**8VSB** the RF modulation technique for ATSC DTV transmission

**electrical length** the length of a line in wavelengths, not physical length

**electrical noise** any undesired voltages or currents that end up appearing in a circuit

**electromagnetic interference** unwanted signals from devices that produce excessive electromagnetic radiation

**energy per bit, or bit energy** amount of power in a digital bit for a given amount of time for that bit

**envelope detector** another name for diode detector

**equatorial orbit** satellite orbits the earth around the equator

**equivalent noise resistance** used by some manufacturers of microwave devices to represent how noisy a device is by comparing its noise to the resistance value that would produce the same amount of noise

**equivalent noise temperature** a method of representing how noisy a microwave device actually is

**error probability** in a digital system, the number of errors per total number of bits received

**error sec** count of the error seconds that occur in the digital transport stream

**error voltage** output of the phase comparator in a PLL

**ESF** extended superframe framing

**evanescent field** the field outside an optical fiber's core–cladding boundary

**event** a disturbance in the light propagating down a fiber span, which results in a disturbance on the OTDR trace

**excess loss** a measure of added losses in addition to the desired splitting ratio in an optical coupler

**excess noise** noise occurring at frequencies below 1 kHz, varying in amplitude and inversely proportional to frequency

**exciter** stages necessary in a transmitter to create the modulated signal before subsequent amplification

**external attack** an attack by someone who doesn't have access to the network

**external noise** noise in a received radio signal that has been introduced by the transmitting medium

**eye patterns** using the oscilloscope to display overlayed received data bits that provide information on noise, jitter, and linearity

**facsimile** system of transmitting images in which the image is scanned at the transmitter, reconstructed at the receiving end, and duplicated on paper

**fading** variations in signal strength that may occur at the receiver over a period of time

**Faraday rotation effect** when microwaves are passed through a piece of ferrite in a magnetic field and their frequency is above the resonant frequency of the ferrite electrons, the plane of polarization of the wave is rotated

**far field** region greater than $2D^2/\lambda$ from the antenna; effect of induction field is negligible

**fax** abbreviation for facsimile

**FDD** frequency division duplex

**feed line** transmission line that transfers energy from the generator to the antenna

**ferrite** compounds of iron, zinc, manganese, magnesium, cobalt, aluminum, and nickel oxides used in special applications of microwave circuits

**ferrite bead** small bead of ferrite material that can be threaded onto a wire to form a device that offers no impedance to dc and low frequencies, but a high impedance at RF

**FFT** (fast Fourier transform) a technique for converting time-varying information to its frequency component

**FHSS** frequency hopping spread spectrum

**fiber Bragg grating** a short strand of fiber that changes the index of refraction and minimizes intersymbol interference

**fiber, light pipe, glass** common synonymous terms for a fiber-optic strand

**fiber-optic detector** the device in a fiber-optic system that converts the modulated light wave signal back into an electrical information signal

**fiber-optic emitter** the device in a fiber-optic system that converts the information signal into a modulated light wave signal

**fiber-optics** the use of light wave radiation to send information from a transmitter site to a receiver via fiber-optic cable

**field** set of lines in a TV scene

**field frequency** the number of times per second that a field of 242.5 horizontal lines forms a video image on a television display

**figure of merit** a way to compare different earth station receivers

**filter method** the method of creating SSB in a transmitter by first creating DSB-SC and then filtering out the undesired sideband

**FIR filter** another name for a non recursive filter

**Firewire A (IEEE 1394a)** a high-speed serial connection that supports data transfers up to 400 Mbps

**Firewire B (IEEE 1394b)** a high-speed serial connection that supports data transfers up to 800 Mbps

**first detector** the mixer stage in a superheterodyne receiver that mixes the RF signal with a local oscillator signal to form the intermediate frequency signal

**5.1 channel input** the commercial name for AC-3 audio standard

**flash OFDM** a spread-spectrum version of OFDM

**flat line** condition of no reflection; VSWR is 1

**flat-top sampling** holding the sample signal voltage constant during samples, creating a staircase that tracks the changing input signal

**flicker** motion appears jerky due to insufficient scanning frequency

**flow control** protocol used to monitor and control rates at which receiving devices can accept data

**flyback transformer** used in TV receivers to produce the high voltage needed for the CRT

**flywheel effect** repetitive exchange of energy in an *LC* circuit between the inductor and the capacitor

**footprint** a map of the satellites coverage area for the transmission back to earth

**forward error-correcting** error-checking techniques that permit correction at the receiver, rather than retransmitting the data

**Foster-Seely discriminator** an outdated FM discriminator design using two tuned *LC* networks and two diode detectors to recover the original intelligence in an FM receiver; requires a separate limiter stage but does provide very low distortion

**Fourier analysis** method of representing complex repetitive waveforms by sinusoidal components

**4:2:2** international standard for digitizing component video

**fractional T1** a term used to indicate that only a portion of the data bandwidth of a T1 line is being used

**frame frequency** number of times per second that a complete set of 485 horizontal lines are traced in a TV receiver

**frame relay** a packet switching network designed to carry data traffic over the public data network

**frame sync** a signal repeated once every 313 data segments to identify that a frame has been completed

**frame synchronizer** used by the 8VSB exciter to synchronize the MPEGII data packets to the 8VSB circuitry

**framing** separation of blocks of data into information and control sections

**free-running frequency** the frequency at which the PLL runs with the input signal removed

**free-running state** the undesired unstable operating mode of a PLL (when it is not locked up)

**free space path loss** this is a measure of the attenuation of the RF path loss as it propagates through space, the earth's atmosphere to and from the satellite

**frequency deviation** amount of carrier frequency increase or decrease around its center reference value

**frequency-division multiple-access** operating on different frequencies based on which channel is available

**frequency-division multiplexing** simultaneous transmission of two or more signals on one carrier, each on its own separate frequency range; also called frequency multiplexing

**frequency domain record** the data points generated by the time to frequency conversion using the FFT

**frequency hopping spread spectrum** transmitting data by a carrier that is switched in frequency in a pseudorandom fashion

**frequency modulation** superimposing the intelligence signal on a high-frequency carrier so that the carrier's frequency departs from its reference value by an amount proportional to the intelligence amplitude

**frequency multiplexing** process of combining signals that are at slightly different frequencies to allow transmission over a single medium

**frequency multipliers** amplifiers designed so that the output signal's frequency is an integer multiple of the input frequency

**frequency reuse** in cellular phones, the process of using the same carrier frequency in different cells that are geographically separated

**frequency shift keying** a form of data transmission in which the modulating wave shifts the output between two predetermined frequencies

**frequency synthesizer** oscillator that generates a wide range of output frequencies using one reference crystal

**Friiss's formula** method of determining the total noise produced by amplifier stages in cascade

**front end** the first amplifier stage of a receiver that receives its input signal from the antenna

**front porch** interval before the horizontal sync pulse appears on the blanking pulse in a TV receiver

**front-to-back ratio** the difference in antenna gain in dB from the forward to the reverse direction

**FTTC** fiber to the curb

**FTTH** fiber to the home

**fusion splicing** a long-term splicing method where the two fibers are fused or welded together

**generating polynomial** defines the feedback paths to be used in the CRC generating circuit

**geosynchronous orbit** another name for synchronous orbit

**ghosting** when the same signal arrives at the TV receiver at two different times; the reflected signal has farther to travel and is weaker than the direct signal, resulting in a double image

**glass, fiber, light pipe** common synonymous terms for fiber-optic strand

**GPIB** general-purpose interface bus; another name for the IEEE-488 interface standard

**graded-index fiber** the index of refraction is gradually varied with a parabolic profile; the highest index occurs at the fiber's center

**Gray code** numeric code for representing decimal values from 0 to 9

**grid-dip meter** device that measures the resonant frequency of tuned circuits and antennas without power being applied to them

**ground wave** radio wave that travels along the earth's surface

**GSM** the global system for mobile communications

**guard bands** 25-kHz bands at each end of a broadcast FM channel to help minimize interference with adjacent stations

**guard times** time added to the TDMA frame to allow for the variation in data arrival

**Gunn oscillator** solid-state bulk-effect source of microwave energy due to the excitation of electrons in the crystal to energy states higher than those they normally occupy

**half-wave antenna** an antenna whose receive elements are one half-wavelength in length

**Hamming code** a forward error-checking technique named for R. W. Hamming

**Hamming distance** the logical distance between defined states; also called minimum distance and Dmin

**handoff** the process of changing channels to a new cell site

**handshaking** procedures allowing for orderly exchange of information between a central computer and remote sites

**harmonics** sinusoidal waves whose frequencies are a multiple of the fundamental frequency

**Hartley oscillator** a popular *LC* oscillator, easily recognized by its inductor that is tapped to form positive feedback

**Hartley's law** information that can be transmitted is proportional to the product of the bandwidth times the time of transmission

**HDLC** high-level data link control; a synchronous proprietary protocol

**HD radio** a digital radio technology that operates in the same frequency band as broadcast AM and FM

**HDTV** high-definition television

**heterodyne detector** another name for synchronous detector or product detector

**heterojunction** a junction of two dissimilar semiconductors

**high-definition television (HDTV)** a new standard being developed that will offer a television picture with the same resolutions as motion picture presentations

**high-level modulation** in an AM transmitter, intelligence superimposed on the carrier at the last possible point before the antenna

**hit** when two spread-spectrum transmitters momentarily transmit at the same frequency; they coincide at that instant

**hold-in range** the range of frequencies in which the PLL will remain locked

**hopping sequence** the order of frequency changes

**horizontal resolution** number of vertical lines that can be resolved in a TV display

**horizontal retrace** in TV, the amount of time it takes to move the electron beam from the right back to the left to start a new line

**horn antenna** microwave antenna consisting of a waveguide that gradually flares out to allow for maximum radiation and minimum reflection back into the guide

**hot-swappable** a term used to describe that an external device can be plugged in or unplugged at any time

**human-made noise** external noise produced by human-made devices that is often due to inherent spark-producing mechanisms

**hybrid AM, FM** both the analog and digital signals share the same channel bandwidth

**IANA** the agency that assigns the computer network IP address

**iconoscope** an early, now obsolete, TV camera design

**idle channel noise** small-amplitude signal that exists due to the noise in the system

**IEEE-488 Interface** a standard used in the transmission of parallel data signals from one device to another

**IIR filter** another name for a recursive fiter

**image antenna** the simulated $\lambda/4$ antenna resulting from the earth's conductivity with a monopole antenna

**image frequency** undesired input frequency in a superheterodyne receiver that produces the same intermediate frequency as the desired input signal

**image orthicon** an early TV camera

**IMPATT diode** *imp*act *i*onization *a*valanche *t*ransit *t*ime; used in the generation of microwave signals

**IMT-2000** international mobile telecommunications; the standard defining 3G wireless

**in-band** the same physical wires are used to multiplex both the voice traffic and the data traffic required to administer the system

**in-band on-channel (IBOC)** original name for HD radio technology

**independent sideband transmission** another name for twin-sideband suppressed carrier transmission

**index-matching gel** a jellylike substance that has an index of refraction much closer to the glass than air

**induction field** radiation that surrounds an antenna and collapses its field back into the antenna

**information theory** the branch of learning concerned with optimization of transmitted information

**infrared light** extending from 680 nm up to the wavelengths of the microwaves

**input intercept** another name for third-order intercept point

**inquiry procedure** used by Bluetooth to discover other Bluetooth devices or to allow itself to be discovered

**insertion loss** the attenuation of a signal within its specified bandwidth

**integrator** a low-pass filter

**integrity** you can rely on the data getting through the communication channel without modification

**intelligence** low-frequency information that can be modulated onto a high-frequency carrier in a transmitter

**intelligence signal** low-frequency information modulated onto a high-frequency carrier in a transmitter

**interaction space** in a magnetron, the open space between the plate and the cathode where the electric and magnetic fields exert force on the electrons

**intercarrier systems** TV receivers that process sound and video signals within the same IF amplifier stages

**interlaced scanning** interleaving two fields of 242.5 horizontal lines to form a video image of 485 horizontal lines, so the human eye thinks it is seeing 60 pictures per second

**interleaving** generating color information around just the right frequency so that it becomes centered in clusters between the black-and-white signals

**intermod** intermodulation distortion

**intermodulation distortion** undesired mixing of two signals in a receiver resulting in an output frequency component equal to that of the desired signal

**internal attack** an attack by someone inside the network

**internal noise** noise in a radio signal that has been introduced by the receiver

**interrupted continuous wave** a more accurate name for a continuous wave transmission

**intersymbol interference (ISI)** the overlapping of data bits that can increase the bit error rate

**IP telephony (voice-over IP)** the telephone system for computer networks

**ISM** industrial, scientific, and medical

**isolators** in-line passive devices that allow power to flow in one direction only

**isothermal region** the stratosphere, considered to have a constant temperature

**isotropic point source** a point in space that radiates electromagnetic radiation equally in all directions

**jitter** the undesired shift or width change in digital bits of data

**Johnson noise** another name for thermal noise, first studied by J. B. Johnson

**key** the secret code used in the encryption algorithm to both create and decode the message

**keying** ensuring that an oscillator starts by turning the dc on and off

**klystron** an electron tube used at microwave frequencies; it consists of cavity resonators and uses velocity modulation of an electron stream flowing from a heated cathode to a collector anode

**laser** low-noise light wave generator

**latency** the time delay from the request for information until a response is obtained

**lattice modulator** another name for balanced ring modulator

**leakage** loss of electrical energy between the plates of a capacitor

**light pipe, glass, fiber** common synonymous terms for a fiber-optic strand

**limiter** stage in an FM receiver that removes any amplitude variations of the received signal before it reaches the discriminator

**limiting knee voltage** another term for quieting voltage

**linear quantization level** another name for uniform quantization level

**line control** procedure that decides which device has permission to transmit at a given time

**line-hybrid transformer** permits full-duplex operation by providing isolation between the transmit and receive legs of the phone system

**loaded cable** cable with added inductance every 6000, 4500, or 3000 feet

**loading coil** a series inductance used to tune out the capacitive appearance of an antenna or transmission line

**lobes** small amounts of RF radiation shown on a radiation pattern; generally undesirable

**local area network** network of users that share computers in a limited area

**local loop** another name for connection from the central office to the end user

**local oscillator (LO)** an oscillator used in a superheterodyne receiver to generate a signal to mix with the received RF signal in order to generate a constant intermediate frequency

**local oscillator reradiation** undesired radiation of the local oscillator signal through a receiver's antenna

**locked** a PLL in the capture state

**lock range** range of frequencies over which PLL can track an input signal and remain locked

**log periodic antenna** a number of dipoles of different lengths and spacing designed to achieve a fairly constant gain and match over a wide range of frequencies

**long haul** the intercity or interoffice class of system used by telephone companies and long-distance carriers

**longitudinal redundancy check** extending parity into two dimensions

**look angle** azimuth and elevation angles for the earth station antenna

**loop antenna** an antenna consisting of a single or multiturn of wire with dimensions much smaller than a wavelength that provides a sharply bidirectional radiation pattern; often used in direction-finding applications

**loopback** test configuration for a data link; the receiver takes the data and sends it back to the transmitter, where it is compared with the original data to indicate system performance; also, when data are routed back to the sender

**loop gain** the total gain of all internal blocks in a PLL

**lower sideband** band of frequencies produced in a modulator from the creation of difference frequencies between the carrier and information signals

**low excitation** improper bias or low carrier signal power in an AM modulator

**low-level modulation** in an AM transmitter, intelligence superimposed on the carrier; then the modulated waveform is amplified before reaching the antenna

**low-noise resistor** a resistor that exhibits low levels of thermal noise

**luminance** the Y signal

**MAC address** a unique 6-byte address assigned by the vendor of the network interface card

**macrobending** loss due to the light escaping into the cladding

**magnetron** an electron tube that is surrounded by an electronmagnet that controls the electron flow from cathode to anode; used to generate microwave frequencies in a radio transmitter

**Manchester code** a popular name for the biphase L-code used on Ethernet systems for local area networks

**Marconi antenna** another name for vertical antenna; usually a quarter-wave grounded antenna

**margin** a measure of how far the MER value is above the threshold of visibility

**mark, space** analog signal representations of digital high or low states, respectively; usually sine waves of specific frequencies

**maser** a low-noise microwave amplifier, similar to a laser that is used with light

**material dispersion** the spreading of light in fiber-optic cable caused by the slight variation of refractive index with wavelength for glass

**matrix** transmitter signal processing circuits

**matrix network** adds and/or subtracts and/or inverts electrical signals

**maximal length** indicates that the PN code has a length of $2^n - 1$

**maximum usable frequency** the highest frequency that is returned to the earth from the ionosphere between two specific points on earth

**maximum usable range** the maximum distance before second return echoes start occurring in radar

***m*-derived filter** filter that uses a tuned circuit to provide nearly infinite attenuation at a specific frequency

**mechanical filter** a mechanically resonant device that is often used as a sharp bandpass filter to convert DSB to SSB in an SSB transmitter

**mechanical splices** splices joining two fibers together with an air gap, thereby requiring an index matching gel to provide a good splice

**metropolitan area network** two or more LANs linked together in a limited geographical area

**microbending** loss caused by very small mechanical deflections and stress on the fiber

**microbrowser** analogous to a web browser that has been adapted for the wireless environment

**microcellular systems** another name for personal communication networks

**microcontrollers** microprocessors that are programmed to do a specific task, such as instrument control

**microstrip** transmission line used at microwave frequencies that has one or two conducting strips over a ground plane

**microwave** frequencies above 1 GHz having wavelengths between 1 mm and 30 cm; any radio equipment and antennas associated with these frequencies of operation

**microwave dish** paraboloid antenna

**microwave monolithic integrated circuit (MMIC)** integrated circuits that are used at microwave frequencies

**Miller code** another name for biphase codes in PCM systems

**millimeter waves** microwave frequencies above 40 GHz; wavelength is often expressed in millimeters

**minimum distance ($D_{min}$)** the minimum distance between defined logical states

**minimum ones density** a pulse is intentionally sent in the data stream even if the data being transmitted is a series of 0s only

**modal dispersion** the different paths taken by the various propagation modes in fiber-optic cable

**mode field diameter** the actual guided optical power distribution, which is typically about 1 $\mu$m or so larger than the core diameter; single-mode fiber specification sheets typically list the mode field diameter

**modem** device that converts digital data to an analog signal for transmission and converts the received analog signal to a digital signal

**modulated amplifier** stage that generates the AM signal

**modulation** impressing a low-frequency intelligence signal onto a higher-frequency carrier signal

**modulation error ratio (MER)** measure of the signal power to the noise in the signal, basically a digital signal-to-noise measurement

**modulation factor** another name for modulation index

**modulation index** measure of the extent to which a carrier is varied by the intelligence

**monochrome** black-and-white TV

**monopole antenna** usually a quarter-wave grounded antenna

**MPEG2** a video-compression technique used in DTV transmission

**multilevel binary** codes that have more than two levels representing the data

**multimode fibers** fibers with cores of about 50 to 100 $\mu$m that support many modes; light takes many paths

**multiple access** any method of multiplexing many signals in one communications channel

**multiplexing** simultaneous transmission of two or more signals in a single medium

**multiplex operation** simultaneous transmission of two or more signals in a single medium

**multipoint circuits** systems with three or more devices

**multitone modulation** another name for orthogonal frequency division multiplexing

**muting** the squelch capability of better-quality broadcast FM receivers

**NAMPS (narrowband mobile phone service)** a system that provides triple the capacity of the AMPS system

**narrowband FM** FM signals used for voice transmissions such as public service communication systems

**natural sampling** when the tops of the sampled waveform or analog input signal retain their natural shape

**near-end crosstalk (NEXT)** a measure of the level of crosstalk or signal coupling within the cable; a high NEXT (dB) value is desirable

**near field** region less than $2D^2/\lambda$; from the antenna

**network** an interconnection of users that allows communication among them

**network interface card (NIC)** the electronic hardware used to interface the computer to the network

**neutralization** a procedure for tuning up a transmitter in which a negative feedback path is introduced in order to counteract the tendency for an amplifier to self-oscillate due to positive feedback in the semiconductor junctions or tube's interelectrode capacitances

**neutralizing capacitor** a capacitor that cancels fed-back signals to suppress self-oscillation

**$(n, k)$ cyclic code** nomenclature used to identify cyclic codes in terms of their transmitted code length ($n$) and message length ($k$)

**noise figure** a figure describing how noisy a device is in decibels

**noise floor** the baseline on a spectrum analyzer display, representing input or output noise of the system under test

**noise limiter** a circuit that cuts off all noise pulse peaks that exceed the highest peaks of the desired signal in a receiver

**noise ratio** a figure describing how noisy a device is as a ratio having no units

**nonlinear coding** each quantile interval step-size may vary in magnitude

**nonlinear device** characterized by a nonlinear output versus input signal relationship

**non-repudiation** this means the bank can prove you issued any bank transaction commands they accepted

**nonrecursive** algorithm that does not include the previous output values to generate the current output

**nonresonant line** one of infinite length or that is terminated with a resistive load equal in ohmic value to its characteristic impedance

**nonuniform coding** another name for nonlinear coding

**normalizing** dividing impedances by the characteristic impedance

**NRZ code (nonreturn to zero)** a popular encoding format for digital systems

**null** a direction in space with minimal signal level

**numerical aperture** a number less than 1 that indicates the range of angles of light that can be introduced to a fiber for transmission

**Nyquist rate** the sampling frequency must be at least twice the highest frequency of the intelligence signal or there will be distortion that cannot be corrected by the receiver

**OC** optical carrier

**OC-1** optical carrier level 1, which operates at 51.84 Mbps

**octave** range of frequency in which the upper frequency is double the lower frequency

**O-, E-, S-, C-, L-, and U-bands** new optical band designations that have been proposed

**omnidirectional** a spherical radiation pattern

**100BaseT** 100-Mbps baseband data over twisted-pair cable

**open systems interconnection** reference model to allow different types of networks to be linked together

**open-wire cable** two conductors spaced a fixed distance apart from each other that connect a transmitter/receiver to an antenna

**optical spectrum** light frequencies from the infrareds on up

**optimum working frequency** the frequency that provides for the most consistent communication path via sky waves

**orthogonal** two signals are orthogonal if the signals can be sent over the same medium without interference

**orthogonal frequency division multiplexing (OFDM)** a technique used in digital communications to transmit the data on multiple carriers over a single communications channel

**oscillator** circuit capable of converting electrical energy from dc to ac

**OTA** over the air

**OTDR** optical time-domain reflectometer; an instrument that sends a light pulse down the fiber and measures the reflected light, which provides some measure of performance for the fiber

**out-of-band** various increments of time are dedicated for signaling and are not available for voice traffic

**overmodulation** when an excessive intelligence signal overdrives an AM modulator producing percentage modulation exceeding 100 percent

**packets** segments of data

**packet switching** packets are processed at switching centers and directed to the best network for delivery

**padder capacitor** small variable capacitor in series with each ganged tuning capacitor in a superheterodyne receiver to provide near-perfect tracking at the low end of the tuning range

**paging procedure** used to establish and synchronize a connection between two Bluetooth devices

**parabolic antenna** microwave antenna consisting of a paraboloid-shaped sheet of metal that reflects received energy to a single point called the focal point

**parametric amplifier** provides low-noise amplification at microwave frequencies using the variation of reactance

**parasitic** unwanted component of an electronic circuit that is a byproduct of fabrication, component assembly, or both

**parasitic array** when one or more of the elements in an antenna array is not electrically connected

**parasitic element** nondriven element of an antenna

**parasitic oscillations** undesired higher frequency self-oscillations in amplifiers

**parity** a common method of error detection, adding an extra bit to each code representation to give the word either an even or odd number of 1s

**passive attack** the bad guy is just listening and picking up what information can be obtained

**patch antenna** square or round "island" of a conductor on a dielectric substrate backed by a conducting ground plane

**payload** another name for the data being transported

**PCS (personal communications services)** a 1900-MHz mobile phone service that has enhanced features such as messaging, paging, and data service

**peak envelope power** method used to rate the output power of an SSB transmitter

**peak power** the useful power of the transmitter contained in the radiated pulses

**peak-to-valley ratio** another name for ripple amplitude

**percentage modulation** measure of the extent to which a carrier voltage is varied by the intelligence for AM systems

**perigee** closest distance of a satellite's orbit to earth

**persistence** length of time an image stays on the screen after the electrical signal is removed

**personal communications network** system that permits communication from small portable radios on microwave frequencies

**phase comparator** circuit that provides an output proportional to the phase difference of two inputs

**phased array** combination of antennas in which there is control of the phase and power of the signal applied at each antenna resulting in a wide variety of possible radiation patterns

**phase detector** another term for phase comparator

**phase-locked loop** closed-loop control system that uses negative feedback to maintain constant output frequency

**phase method** a method of creating SSB in a transmitter without the need for high-$Q$ bandpass filters

**phase modulation** superimposing the intelligence signal on a high-frequency carrier so that the carrier's phase angle departs from its reference value by an amount proportional to the intelligence amplitude

**phase noise** spurious changes in the phase of a frequency synthesizer's output that produce frequencies other than the desired one

**phase shift keying** method of data transmission in which data causes the phase of the carrier to shift by a predefined amount

**phasing capacitor** cancels the effect of another capacitance by a 180° phase difference

**piconet** an ad hoc network of up to eight Bluetooth devices

**piezoelectric effect** the property exhibited by crystals that causes a voltage to be generated when they are subject to mechanical stress and, conversely, a mechanical stress to be produced when they are subjected to a voltage

**pilot carrier** a reference carrier signal

***p-i-n* diodes** diodes used as RF and microwave switches and as AM modulators that consist of *p*-type, *i*ntrinsic (lightly doped), and *n*-type material

**pixel** picture element; the smallest resolved area in a video scanning technique

**pixelate** occurs when a digital picture freezes even when there is motion in the video; usually due to poor SNR

**PN23** industry standard pseudo random test pattern

**PN sequence length** the number of times a PN generating circuit must be clocked before repeating the output data sequence

**point of presence** the point where the user connects data to the communications carrier

**polarization** the direction of the electric field of an electromagnetic wave

**polarization dispersion** broadening of the pulse due to the different propagation velocities of the $X$ and $Y$ polarization components

**polar orbit** satellite travels around the north pole and the south pole

**polar pattern** a circular graph that indicates the direction of antenna radiation

**poles** number of $RC$ or $LC$ sections in a filter

**power-sum NEXT testing (PSNEXT)** a measure of the total crosstalk of all cable pairs to ensure that the cable can carry data traffic on all four pairs at the same time with minimal interference

**ppm (parts per million)** preferred method for rating the frequency stability of crystals

**PPP** point-to-point protocol

**precession** movement of the axis of rotation at right angles to its original axis

**preemphasis** process in an FM transmitter that amplifies high frequencies more than low-frequency audio signals to reduce the effect of noise

**preferred roaming list (PRL)** the roaming list of available cell towers

**preselector** the tuned circuits prior to the mixer in a superheterodyne receiver

**private branch exchange (PBX)** a telephone exchange on the user's premises that simply switches one telephone line to another so that phone calls can be made

**product detector** oscillator, mixer, and low-pass filter stage used to obtain the intelligence from an AM or SSB signal

**protocols** set of rules to allow devices sharing a channel to observe orderly communication procedures

**PSIP** the protocol used in the ATSC digital television standard to carry station channel infomation

**pseudonoise (PN) codes** digital codes with pseudorandom output data streams that appear to be noiselike

**pseudorandom** the number sequence appears random but actually repeats

**public data network** the local telephone company or a communications carrier

**pulse-amplitude modulation** sampling short pulses of the intelligence signal; the resulting pulse amplitude is directly proportional to the intelligence signal's amplitude

**pulse code modulation (PCM)** most common technique for converting an analog signal into a digital word; consists of a sample-hold circuit followed by the actual analog-to-digital converter circuit

**pulse dispersion** a stretching of received pulse width because of the multiple paths taken by the light

**pulse-duration modulation** another name for pulse-width modulation

**pulse-length modulation** another name for pulse-width modulation

**pulse modulation** the process of using some characteristic of a pulse (amplitude, width, position) to carry an analog signal

**pulse-position modulation** sampling short pulses of the intelligence signal; the resulting position of the pulses is directly proportional to the intelligence signal's amplitude

**pulse repetition frequency (PRF)** the number of radar pulses (waveforms) transmitted per second

**pulse repetition rate (PRR)** the pulse repetition rate

**pulse repetition time (PRT)** the time from the beginning of one pulse to the beginning of the next

**pulse-time modulation** modulation schemes that vary the timing (not amplitude) of pulses

**pulse-width modulation** sampling short pulses of the intelligence signal; the resulting pulse-width is directly proportional to the intelligence signal's amplitude

**pump chain** the electronic circuitry used to increase the operating frequency up to a specified level

**pyramidal horn** type of horn antenna with two flare angles

**quadrature** signals at a 90° angle

**quadrature amplitude modulation** method of achieving high data rates in limited bandwidth channels, characterized by data signals that are 90° out of phase with each other

**quadrature detector** a popular integrated circuit FM detector that employs two signals that are 90 degrees out of phase with one another to recover the original intelligence in an FM receiver

**quadrature phase-shift keying (QPSK)** a form of phase-shift keying that uses four vectors to represent binary data, resulting in reduced bandwidth requirements for the data transmission channel

**quality** ratio of energy stored to energy lost in an inductor or capacitor

**quality of service** expected quality of the service

**quantile** a quantization level step-size

**quantile interval** another name for quantile

**quantization** process of segmenting a sampled signal in a PCM system into different voltage levels, each level corresponding to a different binary number

**quantization levels** another name for quantile

**quantizing error** an error resulting from the quantization process

**quantizing noise** another name for quantizing error

**quantum** bundle of energy

**quarter-wavelength matching transformer** quarter-wavelength piece of transmission line of specified line impedance used to force a perfect match between a transmission line and its load resistance

**quieting** the tendency for an FM receiver's audio output signal to turn off as the detector responds to a low input carrier level or no carrier input

**quieting voltage** the minimum FM receiver input signal that begins the limiting process

**quiet zone** between the point where the ground wave is completely dissipated and the point where the first sky wave is received

**radar** using radio waves to detect and locate objects by determining the distance and direction from the radar equipment to the object

**radar mile** unit of measurement equal to 2000 yd (6000 ft)

**radiation** the propagation of energy through space or a material

**radiation field** radiation that surrounds an antenna but does not collapse its field back into the antenna

**radiation pattern** diagram indicating the intensity of radiation from a transmitting antenna or the response of a receiving antenna as a function of direction

**radiation resistance** the portion of an antenna's input impedance that results in power radiated into space

**radio-frequency interference (RFI)** undesired radiation from a radio transmitter

**radio horizon** a distance about 4/3 greater than line-of-sight; approximate limit for direct space wave propagation

**radio telemetry** gathering data on some phenomenon without the presence of human monitors and transmitting the data to another site via radio

**radome** a low-loss dielectric material used as a cover over a microwave antenna

**ranging** a technique used by a cable modem to determine the time it takes for data to travel to the cable-head end

**raster** illuminated area on the CRT of a TV receiver when no signal is being received

**ratio detector** an outdated FM discriminator similar to the Foster-Seely design

**Rayleigh fading** rapid variation in signal strength received by mobile units in urban environments

**Rayleigh scattering** the scattering of light waves in a fiber that decreases rapidly with increasing wavelength
**reactance modulator** amplifier designed so that its input impedance has a reactance that varies as a function of the amplitude of the applied input voltage
**received signal level** the input signal level
**receiver time** in radar, rest time
**reciprocity** an antenna's ability to transfer energy from the atmosphere to its receiver with the same efficiency with which it transfers energy from the transmitter into the atmosphere
**recursive or iterative** algorithms that employ previous output values to generate the current output
**Reed Solomon Encoder** a forward error correction technique
**reflection** abrupt reversal in direction of voltage and current
**reflection coefficient** the ratio of the reflected voltage to the incident voltage at a termination point in a transmission line
**reflector** the parasitic element that effectively reflects energy from the driven element
**refraction** when electromagnetic waves pass from one density to another, the direction of propagation is altered; i.e., the wave bends
**refractive index** ratio of the speed of light in free space to its speed in a given material
**regeneration** restoring a noise-corrupted signal to its original condition
**rejection notch** a narrow range of frequencies attenuated by a filter
**relative harmonic distortion** expression specifying the fundamental frequency component of a signal with respect to its largest harmonic; in dB
**repeater** radio installation consisting of a receiver to pick up a signal from one site and a transmitter to amplify and send the same message to another site
**replacement energy** in a Gunn oscillator, energy supplied by the negative resistance to allow amplification
**resistor noise** another name for thermal noise, due to the fact that it is produced in resistors, especially carbon resistors
**resolution** ability to resolve detailed picture elements in a visual display
**resonance** balanced condition between the inductive and capacitive reactance of a circuit
**resonant line** a transmission line terminated with an impedance that is not equal to its characteristic impedance
**rest time** the time between pulses
**retrace interval** the time it takes an electron beam to move from the end of one line to the start of the next line
**return loss** a measure of the ratio of power transmitted into a cable to the amount of power returned or reflected
**RF shield box** isolates the mobile unit under test from any possible interference from nearby towers
**Rho** this is a comparison between the actual CDMA and a perfect undistorted signal
**ring** the nongrounded wire in two-wire phone service
**ring modulator** another name for balanced ring modulator
**ripple amplitude** variation in attenuation of a sharp bandpass filter within its 6-dB bandwidths
**RJ-45** the four-pair termination commonly used for terminating CAT6/5e cable
**roll-off** the rate of attenuation in a filter
**RS-422, RS-485** balanced-mode serial communications standards that support multidrop applications
**RS-232** a standard of voltage levels, timing, and connector pin assignments for serial data transmission
**RZ code (return to zero)** an encoding format for PCM systems

**satellite link budget** used to verify the received C/N and signal level to the satellite receiver will be met
**scattering** caused by refractive index fluctuations and accounts for 85 percent of the attenuation loss
**Schottky diode** specially fabricated majority carrier device formed from a metal-semiconductor interface, with extremely low junction capacitance
**SC, ST** currently the most popular full-size fiber connectors on the market
**SDTV** standard definition television
**second return echoes** echoes that arrive after the transmission of the next pulse
**sectoral horn** type of horn antenna with top and bottom walls at a 0° flare angle
**segment sync** a repetitive 1-byte pulse that is added to the front of a data segment in DTV
**selectivity** the extent to which a receiver can differentiate between the desired signal and other signals
**self-excited mixer** single stage in a superheterodyne receiver that creates the LO signal and mixes it with the applied RF signal to form the IF signal
**sensitivity** the minimum input RF signal to a receiver required to produce a specified audio signal at the output
**sequence control** keeps message blocks from being lost or duplicated and ensures that they are received in the proper sequence
**shadow mask** screen used in a color CRT to prevent an electron beam from striking the wrong color phosphor triad
**shadow zone** an area following an obstacle that does not receive a wave by diffraction
**shape factor** ratio of the 60-dB and 6-dB bandwidths of a high-$Q$ bandpass filter
**shorted-stub matching section** a shorted transmission line of specified length that can be used to force a perfect match between a transmission line and its load impedance
**shot noise** noise introduced by carriers in the *pn* junctions of semiconductors
**sideband splatter** distortion resulting in an overmodulated AM transmission creating excessive bandwidths

**signaling systems** a system used to administer calls on the telephone network

**signal injection** troubleshooting by injecting an input signal and tracing through the circuit to locate the failed component

**signal spectrum** method of representing a signal by plotting its amplitude versus frequency characteristics

**signal-to-noise ratio** relative measure of desired signal power to noise power

**signature sequence** the pseudorandom digital sequence used to spread the signal

**single-mode fibers** fiber cables with core diameters of about 5 $\mu$m; light follows a single path through the core

**single sideband (SSB)** a form of amplitude modulation whereby the carrier and one sideband are filtered out, leaving the other sideband as the only remaining RF signal

**single-stub tuner** the stub's distance from the load and the location of its short circuit are adjustable to allow a match between line and load

**skin effect** the tendency for high-frequency electric current to flow mostly near the surface of the conductive material

**skipping** the alternate refracting and reflecting of a sky wave signal between the ionosphere and the earth's surface

**skip zone** another name for quiet zone

**sky wave** those radio waves radiated from the transmitting antenna in a direction toward the ionosphere

**slope detector** a simple FM discriminator that detects FM by first converting FM to AM and then detecting the intelligence by a simple diode detector; usually creates too much distortion to be an acceptable design

**slope modulation** another name for delta modulation

**slope overload** in delta modulators, when the analog signal has a high rate of amplitude change, the encoder can produce a distorted analog signal

**slot antenna array** UHF or microwave antenna, often used on aircraft, that couples RF energy into a slot in a large metallic plane

**slotted aloha** a network communications protocol technique similar to the Ethernet protocol

**slotted line** section of coaxial line with a lengthwise slot cut in the outer conductor to allow measurement of the standing wave pattern

**small-form factor** a family of connectors about half the size of ST and SC connectors

**S meter** signal strength meter that responds to the received signal level in a receiver

**Smith chart** impedance chart developed by P. H. Smith, useful for transmission line analysis

**solar noise** space noise originating from the sun

**SONET** protocol standard for optical transmission in long-haul communication

**space noise** external noise produced outside the earth's atmosphere

**space wave** a radio wave that travels in straight lines between transmitter and receiver, not necessarily close to the ground; it is typically a line-of-sight transmission. If any obstruction exists, the signal is blocked from reaching the receiver.

**spatial diversity** reception of two signals from two satellites at any given time and the selection of the best one

**spectrum analyzer** instrument used to measure the harmonic content of a signal by displaying a plot of amplitude versus frequency

**spread** the RF signal is spread randomly over a range of frequencies in a noiselike manner

**spread spectrum** communication systems in which the carrier is periodically shifted about at different nearby frequencies in a random-like manner determined by a hidden code; the receiver must decode the sequence so that it can follow the transmitter's frequency hops to the various values within the specified bandwidth

**spurious frequencies** extra frequency components that appear in the spectral display of a signal, signifying distortion

**spurs** undesired frequency components of a signal

**square-law device** a device that exhibits an output versus input signal response resembling a parabola; often used as mixers and detectors in receivers due to its minimum distortion characteristics

**squelch** a circuit in a receiver that cuts off the background noise in the absence of a desired signal; often found in FM receivers

**stagger tuning** cascading a number of tuned bandpass filters, each having a slightly offset bandpass frequency, to form a wider flat bandpass with steep high- and low-frequency roll-off skirts

**standing wave** waveforms that apparently seem to remain in one position, varying only in amplitude

**standing wave ratio** another name for voltage standing wave ratio

**start bit, stop bit** used to precede and follow each transmitted data word

**static** electrical noise that may occur in the output of a receiver

**static convergence** proper beam convergence at the center of a CRT

**statistical concentration** processors at switching centers directing packets so that a network is used most efficiently

**step-index** referring to the abrupt change in refractive index from core to clad in a fiber

**step-index fibers** an abrupt change in the refractive index from core to clad in fiber

**stereo** a radio transmission of two separate signals, left and right, used to create a three-dimensional effect for the receiver's audience

**stray capacitance** undesired capacitance between two points in a circuit or device

**stripline** transmission line used at microwave frequencies that has two ground planes sandwiching a conducting strip

**STS** synchronous transport signals used for transporting data in fiber-optic transmission; has equivalence to OC-number specifications

**sub-satellite point** point on the earth's surface where a line drawn from the satellite to the center of the earth intersects the earth's surface

**subsidiary communication authorization** an additional channel of multiplexed information authorized by the FCC for stereo FM radio stations to feed services to selected customers

**superheterodyne receiver** receiver design superior to the simple TRF design due to its mixer and local oscillator stages and its ganged tuning characteristics; provides for easier tuning and near-constant selectivity at all frequencies within its tuning range

**surface acoustic wave filters** extremely high-*Q* filters often used in TV and radar applications

**surface wave** another name for ground wave

**surge impedance** another name for characteristic impedance

**SVC** switched virtual circuit

**switch** MTSO, MSC, and switch refer to the same equipment

**symbol substitution** displaying an unused symbol for the character with a parity error

**synchronizing** in TV, precisely matching the movement of the electron beam horizontally and vertically in the recording camera with the electron beam in the receiver

**synchronous** a system in which the transmitter and receiver clocks run at exactly the same frequency because the receiver derives its clock signal from the received data stream

**synchronous detector** a complex method of detecting an AM signal that gives low distortion, fast response, and amplification

**synchronous orbit** when a satellite's position remains fixed with respect to the earth's rotation

**synchronous system** the transmitter and receiver clocks run at exactly the same frequency

**sync separator** circuit in a TV receiver that separates the horizontal and vertical sync pulses from the video signal

**syndrome** the value left in the CRC dividing circuit after all data have been shifted in

**systematic codes** the message and block-check character transmitted as separate parts within the same transmitted code

**tangential method** method of measuring the amplitude of noise on a signal using an oscilloscope display

**tank circuit** parallel *LC* circuit

**TCXO (temperature compensated crystal oscillator)** a crystal oscillator that contains circuitry to keep the output frequency constant with respect to changes in temperature

**TDD** time division duplex

**TDMA (time-division multiple-access)** a technique used to transport data from multiple users over the same data channel

**Telco** the local telephone company

**telemetry** remote metering; gathering data on some phenomenon without the presence of human monitors

**thermal noise** internal noise caused by thermal interaction between free electrons and vibrating ions in a conductor

**third-order intercept point** receiver figure of merit describing how well it rejects intermodulation distortion from third-order products resulting at the mixer output

**3G** the third generation in wireless connectivity

**threshold** in FM, the point where *S/N* in the output rapidly degrades as *S/N* of received signal is degrading

**threshold sensitivity** minimum VCO input to allow the PLL to be in the locked mode

**threshold voltage** another term for quieting voltage

**time-division multiple-access** a single transmitter can service multiple stations simultaneously on the same frequency based on available bursts of time

**time-division multiplexing** two or more intelligence signals are sequentially sampled to modulate the carrier in a continuous, repeating fashion

**time domain reflectometry** technique of sending short pulses of electrical energy down a transmission line to determine its characteristics by observing on an oscilloscope for resulting reflections

**time slot** a fixed location (relative in time to the start of a data frame) provided for each group of data

**tip** the grounded wire in two-wire phone service

**token passing** a channel access method suited to ring network topology where a user waits for "token" possession to make a transmission

**topology** architecture of a network

**total harmonic distortion** a measure of distortion that takes all significant harmonics into account

**total internal reflection** a light wave traveling down a glass fiber by constant reflection off its side walls

**tracking ADC** an ADC whose output indicates input changes rather than absolute values of input

**tracking filter** able to provide a fixed bandwidth output even as the center frequency varies

**tracking range** once a PLL is locked up, this is the range of input frequencies that can be applied without having it lose its lock and return to the free-running state

**transceiver** transmitter and receiver sharing a single package and some circuits

**transducer** device that converts energy from one form to another

**transit-time noise** noise produced in semiconductors when the transit time of the carriers crossing a junction is close to the signal's period and some of the carriers diffuse back to the source or emitter of the semiconductor

**transmission line** the conductive connections between system elements that carry signal power
**transparency** control character recognition by using the character insertion process
**transphasor** an optical switch using a laser beam
**transponder** electronic system that performs reception, frequency translation, and retransmission of received radio signals
**transverse** when the oscillations of a wave are perpendicular to the direction of propagation
**trap** another name for wavetrap
**trapezoidal pattern** a measurement technique for checking the purity of an AM modulator by use of the oscilloscope in the X:Y mode
**traveling waves** voltage and current waves moving through a transmission line
**traveling wave tube (TWT)** a high-gain, low-noise, wide bandwidth microwave amplifier
**trellis encoder** used by the 8VSB exciter to provide another form of forward error correction
**triads** individual groups of red, green, and blue phosphor dots on the CRT face
**trimmer** small variable capacitance in parallel with each section of a ganged capacitor
**tropospheric scatter** a phenomenon whereby small amounts of radiation are scattered by the troposphere and picked up by receivers at ground level when the transmitted signal is set at a very high power and selected microwave frequencies are used
**trunk** the circuit connecting one central office to another
**T3** a digital data rate of 44.736 Mbps
**tunable laser** when a laser's fundamental wavelength can be shifted a few nanometers; ideal for traffic routing in DWDM systems
**tuned radio frequency receiver** the most elementary receiver design, consisting of RF amplifier stages, a detector, and audio amplifier stages
**tuner** front end of a TV receiver that selects the desired station
**twin lead** standard 300-Ω parallel wire transmission line
**twin-sideband suppressed carrier** the transmission of two independent sidebands, containing different intelligence, with the carrier suppressed to a desired level
**Type A connector** the UBS upstream connection that connects to the computer
**Type B connector** the UBS downstream connection to the peripheral

**UART** device that converts parallel computer data into serial data
**unbalanced line** the electrical signal in a coaxial line is carried by the center conductor with respect to the grounded outer conductor
**uniform quantization level** each quantile interval is the same step-size
**U-NII** unlicensed national information infrastructure
**universal asynchronous receiver/transmitter** device that converts parallel computer data into serial data
**universal serial bus (USB)** a hot-swappable, high-speed serial communications interface
**up-conversion** mixing the received RF signal with an LO signal to produce an IF signal higher in frequency than the original RF signal
**uplink** sending signals to a satellite
**uplink budget** a measure of the expected signal level from the earth station to the satellite
**upper sideband** band of frequencies produced in a modulator from the creation of sum-frequencies between the carrier and information signals

**vane** a thin card of resistive material used as a variable attenuator in a waveguide
**varactor diode** diode with a small internal capacitance that varies as a function of its reverse bias voltage
**variable bandwidth tuning** technique to obtain variable selectivity to accommodate reception of variable bandwidth signals
**varicap diodes** another name for varactor diodes
**VCI** virtual channel identifier
**velocity constant** ratio of actual velocity to velocity in free space
**velocity factor** another name for velocity constant
**velocity modulation** an electron beam moving along in bursts of electrons as in a klystron
**velocity of propagation** the speed at which an electrical or optical signal travels
**vertical antenna** an antenna that consists of a vertical tower, wire, or rod, usually a quarter-wavelength in length, that is fed at the ground and uses the ground as a reflecting surface
**vertical cavity surface emitting lasers (VCSELs)** a light source exhibiting the simplicity of LEDs combined with the performance of lasers
**vertical resolution** number of horizontal lines that actually make up a TV display
**vertical retrace interval** in TV, the amount of time it takes to move the electron beam from the bottom right corner to the top left corner to start another field
**vestigial-sideband operation** a form of amplitude modulation in which one of the sidebands is partially attenuated
**V.44 (V.34)** the standard for an all analog modem connection with a maximum data rate of up to 34 Kbps
**video amplifiers** amplifiers with bandpass characteristics from dc up into the MHz region
**video signal** picture portion of a TV signal, which is amplitude-modulated onto a carrier

**virtual channel connection (VCC)** carries the ATM cell from user to user

**virtual path connection (VPC)** used to connect the end users

**V.92 (V.90)** the standard for a combination analog and digital modem connection with a maximum data rate up to 56 Kbps

**voltage-controlled oscillator** designed so that its output voltage varies as a function of the amplitude of the applied input voltage

**voltage standing wave ratio** ratio of the maximum voltage to minimum on a line

**VPI** virtual path identifier

**VVC diodes** another name for varactor or varicap diodes

**water mark sticker** a sticker used to detect water damage

**wavefront** a plane joining all points of equal phase in a wave

**waveguide** a microwave transmission line consisting of a hollow metal tube or pipe that conducts electromagnetic waves through its interior

**waveguide dispersion** the dispersion of light in fiber-optic cable caused by a portion of the light energy traveling in the cladding

**wavelength** the distance traveled by a wave during a period of one cycle

**wave propagation** movement of radio signals through the atmosphere from transmitter to receiver

**wavetrap** high-$Q$ bandstop circuit that attenuates a narrow band of frequencies

**W-CDMA** wideband code division multiple access

**white noise** another name for thermal noise because its frequency content is uniform across the spectrum

**wide area network** two or more LANs linked together over a wide geographical area

**wideband FM** FM transmitter/receiver systems that are set up for high-fidelity information, such as music, high-speed data, stereo, etc.

**WiMAX** a broadband wireless system based on the IEEE 802.16e standard

**wired digital communications** digital communications over a wired connection

**wireless** the term used today to describe telecommunications technology that uses radio waves, rather than cables, to carry the signal

**wireless digital communications** the transport of digital data over a wireless medium

**wireless markup language (WML)** the hypertext language for the wireless environment

**WMLScript** the WML comparable version of Javascript

**xDSL** a generic representation of the various DSL technologies available

**X.25** a packet-switched protocol designed for data transmission over analog lines

**Yagi-Uda antenna** a popular type of directional antenna consisting of a half-wave dipole as the driven element, one reflector, and several directors

**yoke** coil around the CRT tube that deflects the electron beam with its magnetic field

**0 dBm** 1 mW measured relative to a 1-mW reference

**zero-dispersion wavelength** the wavelength where material and waveguide dispersion cancel each other

**zoning** a fabrication process that allows a dielectric to change a spherical wavefront into a plane wave

*This page intentionally left blank*

# Index

Page references followed by "f" indicate illustrated figures or photographs; followed by "t" indicates a table.


**0**
0 dBm, 3, 7-8, 61, 182, 713

**1**
100BaseT, 706

**2**
2G, 660

**3**
3G, 460, 703, 711

**4**
4:2:2, 702

**8**
8VSB, 487, 696, 699, 701-702, 712
8VSB exciter, 702, 712

**A**
Absorption, 36, 527, 566, 568, 640, 681
AC-3, 701
Access time, 561
Accumulator, 328, 344
accuracy, 16, 50, 65, 91, 106, 201, 233, 426, 585, 674-675
Acquisition time, 349, 356-357, 399, 695
ACSSB systems, 167, 181-182
Active attack, 695
Active filter, 389
active filters, 388-389, 393
Active RFID tag, 681, 693
A/D conversion, 390
Adder, 181, 241, 280, 489
Addition, 17, 29, 70, 73, 75-76, 88, 94, 141, 153, 158, 220, 240, 272, 287, 336, 372, 382, 436, 447, 550, 577, 582, 591, 620, 638
Address, 181, 311-312, 412-413, 703, 705
Address field, 412
Adjacent channel interference, 217, 434
admittance, 536-537, 541, 543, 556
AGC, 117, 127-128, 135-136, 138-143, 145-147, 149, 151, 159, 161, 167, 182, 260, 262-264, 283-284, 294, 296, 298-299, 304-307, 313, 340-343, 434, 454, 696
AGC circuit, 142, 283, 340-341
AGC level, 136, 138, 140, 142-143, 161, 262, 305, 309-310
AGC voltage, 141-143, 340-341
A-law, 367
Algorithm, 31, 311, 348, 380, 389-391, 400, 425, 704, 706
Algorithms, 349, 351, 380, 388, 390, 695, 709
Aliasing, 3, 33, 358-359, 395, 398, 695
Aliasing distortion, 695
Alphanumeric codes, 348, 351
Alternation, 393-394
AM broadcast band, 119, 160, 256
AM receiver, 13, 116, 133, 143, 146, 160-161, 184, 188, 202, 266, 287, 294
AMI, 373-375, 405, 418-419
Amplification, 4, 12-13, 83-86, 92, 94, 123, 128, 133, 135, 143, 146, 224, 233, 236, 243, 261, 264, 272, 283, 316, 701, 706, 709, 711
Amplifier, 2, 6, 11, 14, 16, 18, 20-26, 45, 50, 54-55, 61-63, 66, 69, 84-86, 88, 90-94, 102-105, 107, 112-114, 118, 127-130, 135-136, 138, 142-143, 147-149, 151, 156, 177-178, 182-184, 187-188, 194-196, 201-202, 219, 224-225, 228, 232-233, 235, 238, 260-263, 269, 279, 283-284, 287-289, 300-301, 303, 305-310, 313-314, 325-326, 331, 335-337, 340-341, 344, 356, 393, 395, 430, 449-450, 464, 489-490, 494-495, 557, 592-593, 677, 695, 699-700, 702-703, 705-706, 709
audio, 24-25, 54-55, 61, 94, 103, 118, 127-128, 142-143, 148-149, 156, 161-162, 177-178, 182, 184, 187-188, 195-196, 201, 224-225, 232, 235, 238, 243, 279, 283, 287-289, 308-310, 335-336, 340-341, 449, 695, 697, 699-700, 709, 712
class A, 86, 92, 135, 177
class AB, 183, 199
class B, 84
class C, 84-86, 92, 104, 112, 232-233, 243
class D, 92-93, 430
common-emitter, 45, 92-93
common-source, 262
differential, 88, 269, 307, 700
distortion, 24, 45, 62-63, 69, 82, 85-86, 91, 113, 135-136, 151, 184, 194, 232-233, 261-262, 269, 287, 313-314, 316, 395, 695, 699, 702, 706, 709
emitter-follower, 430
FET, 135, 261-262
inverting, 430, 464, 490, 494-495
linear, 84-86, 88, 91-92, 114, 135, 143, 177-178, 194-195, 199, 201, 243, 313, 425, 430, 449, 490
multistage, 21
noninverting, 430
operational, 88, 336, 393, 450, 490, 494
operational transconductance, 88
operational transconductance amplifier (OTA), 88
power, 14, 18, 21-26, 45, 50, 54-55, 61-63, 82, 84-85, 88, 91-92, 94, 102-105, 107, 112-114, 118, 127, 143, 148-149, 151, 156, 161, 177-178, 182-184, 188, 196, 201-202, 219, 232-233, 235, 238, 260-261, 263, 283-284, 287, 308, 313-314, 317, 331, 335-337, 494, 557, 614, 677, 695, 699, 705, 709
push-pull, 94, 143, 183, 199, 647
small signal, 11, 262
transistor, 16, 18, 20, 45, 92-94, 103, 105, 107, 112, 138, 142, 160-161, 183, 225, 233, 261, 263, 269, 283, 288, 294, 306, 310, 331, 336
tuned, 21, 84, 86, 105, 112, 118, 128-130, 135-136, 138, 143, 149, 160-162, 178, 187-188, 194, 232, 238, 262, 279, 283, 289, 301, 303, 447, 449, 490, 702, 705
two-stage, 62
Amplitude, 5, 11, 13-14, 17, 26, 29, 31, 33, 45, 57, 63, 67-114, 115, 117-136, 138-162, 165-167, 169, 172, 175, 181-182, 192-193, 196, 199-200, 204, 206-212, 218-221, 224, 227-228, 232, 234, 243, 245-246, 252-254, 256, 260, 263-266, 268, 305, 317, 333, 349, 356-357, 393-394, 426-432, 449, 459-460, 489-490, 524, 527, 529-530, 625, 707-713
Amplitude companding, 349, 366, 695
Amplitude modulation, 5, 67-114, 115, 117-136, 138-162, 207-208, 263, 308, 357, 405, 427, 432, 435, 459-460, 469, 497, 708, 710, 712
Amplitude modulation (AM), 5, 208, 695
Amplitude modulation fundamentals, 68, 70, 110
Analog, 28, 34, 170, 176, 269-270, 283, 287, 298, 306-307, 328-329, 340-341, 350-351, 355-360, 362, 365-368, 370-372, 388, 395-396, 401, 406-408, 412, 414, 421, 424-427, 430-432, 448, 453, 460, 485-486, 490-492, 494, 699, 703, 705-706, 712-713
Analog quadrature detection, 269
Analog signal, 328, 350, 355-357, 359, 365, 368, 390, 395-396, 401, 408, 424-427, 430-432, 453, 486, 490, 705, 708, 710
Analog-to-digital converter, 360, 368, 371, 406
Analog-to-digital converter (ADC), 360, 368
AND gate, 370
Anechoic chamber, 609, 641, 649, 695
Angle, 5, 168, 204-206, 211, 220, 234, 252-253, 269, 560-561, 565-567, 573-575, 577-578, 582-584, 602-604, 625, 635, 659-660, 674, 678, 690, 698, 704, 707-709
Angle diversity, 578
Angle modulation, 204-206, 211, 253, 695
Angle of incidence, 565-567, 659
Angle of reflection, 565-567, 659
Angle of refraction, 566-567
Anode, 309, 704-705
Antenna, 5, 7, 11-13, 23-24, 62-63, 69, 80-81, 84-85, 92-95, 98, 101, 104-107, 112-114, 118, 127-128, 136, 143, 149-150, 153, 156, 161, 178, 181, 187, 192-193, 195-196, 199, 215, 232, 236-239, 249-250, 254-255, 261-262, 283, 287, 336-337, 447, 471, 490, 532-533, 541, 544-545, 549, 555-557, 560, 562-563, 566, 568-571, 579, 589-593, 596-600, 602-605, 608-649, 661, 670, 674, 677-680, 692-693, 695-710
Antenna arrays, 608, 627
Antenna bandwidth, 631
Antenna coupler, 94, 113, 695
Antenna feed lines, 608, 619, 645, 647
Antenna gain, 12, 592-593, 596, 604, 609, 614-615, 628, 695, 699
Antenna length, 490, 616, 618, 620
Aperture time, 349, 356-357, 399, 695
Apogee, 561, 579-582, 591, 604, 695
applications, 4, 10-12, 17, 26, 48, 84-85, 88, 123-124, 135, 138, 146, 169, 173, 176, 210, 218, 227, 231, 271, 318-319, 335, 343, 355, 388, 422, 444-445, 447, 471-472, 475, 483, 487, 502, 507-509, 537, 543, 579-580, 619-620, 634, 661-663, 681-682, 684, 690-691, 704
  attenuators, 690-691
Architecture, 283, 355, 390, 445, 711
Armstrong modulator, 205, 233-234, 252
ASCII, 349, 351-352, 379, 399, 436, 484-485, 696
Aspect ratio, 696
Asymmetric operation, 696
Asynchronous, 351-352, 372, 405-406, 412, 416, 421, 436, 453, 696, 712
Atmospheric noise, 3, 13, 696
ATSC pilot, 696
Attenuation, 6, 42-43, 99, 101, 124, 159, 161, 175, 294, 301, 332-333, 390-391, 395, 503, 505-506, 516, 539, 554, 575, 594, 636, 652, 654-655, 658, 662-663, 667-669, 691, 695-696, 702-703, 705, 709
Attenuation distortion, 696
Attitude controls, 561, 578, 696
Audio, 7-9, 12, 24-25, 28, 52, 54-55, 61, 70, 101, 103, 118-119, 122, 127-128, 142-143, 146, 148-152, 156, 161-162, 164, 172, 177-179, 181-182, 184, 186-188, 191-193, 195-196, 201, 217, 224-226, 232, 234-236, 238-241, 243, 245, 247-248, 253, 266-267, 279-281, 283, 287-290, 295-296, 308-312, 326-327, 340-341, 355, 359, 399, 449, 578, 590-591, 598, 695-697, 699-701, 707-709, 712
Audio amplifier, 54-55, 61, 103, 118, 143, 156, 161-162, 177, 187-188, 195-196, 224, 287-288, 308-310, 335, 341, 712
Aural signal, 696
Authentication, 696
Autodyne mixer, 117, 138, 161, 696
Automatic frequency control (AFC), 149, 167, 184, 232, 249, 260, 294
Automatic gain control (AGC), 128, 140, 159, 304, 340, 696
Automatic noise limiter, 308-309, 343

Auxiliary AGC, 117, 146, 161, 298, 305-307, 342-343
Availability of the network, 696
Average value, 121, 269, 617-618
Azimuth, 583-584, 604, 674, 704

## B

B8ZS, 405, 419-420, 696
Back porch, 696, 698
Backhoe fading, 696
Balanced modulation, 178
Balanced modulator, 126, 164-165, 169-170, 172, 177-178, 180-181, 186, 191-192, 194, 199-201, 234-235, 240-241, 248, 256, 489, 696-698, 700
Balanced ring modulator, 165, 169, 199-200, 696, 704, 709
Balun, 510, 544, 636
band frequencies, 583, 662
Bandpass filter, 39, 65, 71, 133, 137-138, 173, 175, 189, 200, 292-293, 308, 435, 709
Bandwidth, 2-3, 6, 12, 14-16, 21-22, 27-29, 31, 33-34, 39-40, 62-63, 65-66, 79, 98-99, 101, 111, 118-119, 143, 166, 176-177, 181, 188, 199, 202, 211-212, 226, 245, 251-256, 299, 307-308, 312-314, 316, 343, 358-360, 379, 388, 395, 404, 413-416, 419, 421-422, 424, 446, 453-454, 461, 465, 469-470, 472, 477, 505-507, 576, 595-597, 631-633, 695-699, 702-703
  fractional, 416, 454, 702
Bandwidth considerations, 404, 414
Bandwidth-limited communications channel, 34
Barkhausen criteria, 3, 45, 66, 696
Base, 16, 45-46, 65, 69, 83-84, 103-104, 138, 142-143, 151-153, 156, 161, 225-226, 243-244, 246, 288, 291, 306, 310, 406, 430, 432, 493, 547-548, 578, 623, 625, 635-636, 646-647
  time, 45, 65, 142-143, 156, 226, 310, 430, 432, 449
Base bias, 83
Base current, 306
Base modulation, 69, 84, 696
Base station, 243, 493, 578
Baseband, 372, 405-406, 453, 469, 696, 706
Base-emitter junction, 103-104, 244, 291
batteries, 154, 681
  cells, 154
Battery, 154, 326, 443, 447, 493, 518, 524-526, 579, 639, 697
Baud rate, 405, 414, 696
Baudot code, 349, 352, 354-355, 696
Beamwidth, 608-609, 614, 629, 631, 646, 649, 674
Bessel functions, 205, 211, 218, 252, 256, 696
Beta, 296
BFO drift effect, 186
Bias, 17, 19, 46, 83-84, 86, 88, 97, 103-104, 107, 124, 135, 142, 146, 152-153, 176, 180, 183-184, 188, 227-228, 244, 246, 263, 280, 290-291, 305, 309, 331-333, 336
  base, 46, 83-84, 103-104, 142, 152-153, 244, 246, 291
  BJT, 83
  diode, 88, 103, 124, 131-132, 142, 146, 160, 188, 227-228, 290-291, 305, 309, 332, 712
  emitter, 17, 84, 103-104, 142, 152-153, 244, 246, 291, 309
  forward, 88, 142, 146, 291, 712
  LED, 135, 146, 188, 309
  reverse, 84, 86, 131-132, 146, 160, 227-228, 290-291, 305
  self, 86, 103, 135, 152
  zero, 86, 88, 97, 131, 160, 290-291
Bias current, 88, 124, 142, 333
Bias stability, 263
Bias voltage, 104, 131, 227, 244, 280, 332, 712
Biasing, 46, 333
Binary, 323, 349, 351-357, 359-360, 362-364, 368-369, 372, 375-376, 381-384, 387, 398-399, 406, 408-410, 413-414, 418, 433, 450-451, 453, 462-465, 477-478, 484, 495, 498, 588-589, 696-697, 705, 708
  data, 351, 353, 355, 368-369, 372, 375-376, 381-384, 387, 398-399, 406, 413-414, 418, 450-451, 453, 462-465, 469-470, 477-478, 484, 495, 498, 588-589, 705, 708
  digit, 353
  division, 381, 383-384, 460, 477, 498, 588, 697, 699, 705
  fraction, 433
  information, 351-352, 354, 360, 368, 372, 381, 384, 406, 408-410, 413, 418, 433, 696-697
  number, 323, 351, 354, 359-360, 362, 364, 368, 375-376, 381-384, 387, 399, 409-410, 453, 463, 477, 696, 708
  point, 360, 368, 462
  sequence, 352-353, 384, 409, 413, 450-451, 477-478, 484, 498, 588-589, 697, 708
  system, 351-352, 355, 359, 362-364, 368, 372, 375-376, 387, 398-399, 406, 408-410, 413-414, 453, 462-463, 469-470, 477, 498, 589, 696-697, 708
Binary coding, 406, 408-410
Binary-weighted resistor DAC, 368-369
Biphase codes, 374, 412, 705
Biphase L, 373-374, 705
Biphase M, 373-374, 399
Biphase S, 373-374
Bipolar, 17, 283, 373-375, 399, 405, 419-420, 696
Bipolar coding, 405, 419, 696
Bipolar junction transistor (BJT), 83
Bipolar violations, 419-420
Bit, 12, 34, 56, 176, 307, 311, 323, 328, 337, 344, 351-355, 360-365, 367-372, 375-381, 383, 385-387, 399, 401, 404-406, 408-411, 413-417, 419, 421-423, 445, 451, 453, 468-471, 473-474, 476-478, 482-483, 485, 696-697, 700-701, 704, 707, 710
Bit energy, 405, 411, 700-701
Bit stuffing, 405, 413
Blackouts, 576-577
Blanking pulse, 696, 702
Block check character, 348-349, 380, 412, 697
Blue alarm, 417
Bluetooth, 460, 703, 706-707
Bode plotter, 293, 600-601, 689
BPSK receiver, 464-465, 494
Branch, 4, 410, 703, 707
Breakdown, 531
Bridge rectifier, 154-155
Broadcast band, 119, 134, 160, 238, 256, 258, 287, 646
Broadside array, 629, 645, 648
Brush, 427
Buffer, 91, 93-94, 113, 356-357, 440, 442-443
Burst, 11, 379, 387-388, 405, 421, 455, 587, 697-698
Bursty, 405, 421-422
Bus, 142, 283-284, 306, 404-405, 436-437, 445, 453, 486, 702, 712
  control, 142, 283, 306, 405, 436-437, 702, 712
  external, 283, 436, 445
  FireWire, 405, 436-437, 445
  IEEE-488, 702
  internal, 445, 712
  ISA, 445
  local, 283, 445
  PCI, 445
  RS-422, 405, 445
  USB, 405, 436-437, 445, 712
Butterworth filter, 165, 188, 389-392
BWmin, 415
Bypass capacitor, 142, 263
Byte, 413, 419-420, 709

## C

Cable modems, 483, 697
Cable testing, 549
calculators, 535, 595
Capacitance, 3, 35-36, 43, 47-48, 51-52, 86, 93, 95, 101, 119-120, 124, 129-132, 138, 146, 159-160, 162, 173, 190, 200, 207, 227-228, 235, 245-246, 309, 330, 399, 447, 462, 508, 511-514, 519, 555, 557, 624, 672-673, 709-710
  input, 51, 86, 93, 95, 101, 124, 129, 138, 157, 159, 228, 235, 261, 462, 511-512, 532, 555, 619, 697, 709-710
  Miller, 190, 237
  output, 47-48, 51-52, 86, 93, 95, 101, 119, 124, 129, 138, 157, 159-160, 228, 235, 245-246, 309, 330, 399, 447, 462, 488, 557, 697, 709-710
  stray, 3, 43, 130, 330
  varactor, 131-132, 160, 227-228, 235, 712
Capacitive coupling, 280
Capacitive reactance, 36-37, 225, 245-246, 511, 513, 626, 709
Capacitor, 36, 42, 44, 46-47, 49, 56, 63, 65, 69, 85-86, 95, 104-105, 117-118, 120, 122-124, 126, 129-131, 136, 142-143, 151-158, 160-162, 173-174, 186, 204, 207, 209-210, 225, 227, 239, 244-247, 252-253, 263, 283, 290, 305, 309, 322-323, 334, 337, 356-357, 372, 430, 434, 447, 449-450, 511, 514, 516-518, 521, 543, 624, 698, 702, 704, 706-708
  bypass, 142, 245, 263, 290
  ceramic, 173-174
  charging, 44, 357, 430, 517, 521
  coupling, 46, 95, 136, 158, 227, 244, 263, 272, 706
  decoupling, 152
  electrolytic, 268
  fixed, 151, 337, 356, 449, 698, 706
  tantalum, 322
  trimmer, 117, 130-131, 244, 712
  variable, 44, 47, 85, 95, 105, 118, 120, 129-131, 136, 142, 160, 173, 207, 245, 322-323, 706, 712
Capacitor filter, 372
capacitors, 15, 21, 35-36, 43, 52, 56, 94-95, 104-105, 129-130, 153, 159, 162, 178, 189, 237, 244, 266, 289-290, 330-331, 336, 357, 393, 395, 492, 517, 522, 524, 543-544, 620, 637, 698
  electric field, 36, 698
  in series, 130, 698
  measurement, 15, 101
  types, 15, 43, 52, 159, 357, 544
Capacity, 28, 414, 419, 444, 454, 506, 654-655, 697
Capture effect, 204-205, 223, 254, 302, 598, 697
Capture range, 272, 697
Capture ratio, 205, 223
Capture state, 259, 271, 704
Carbon, 15, 641
Carrier, 4-6, 12, 25, 61, 70-92, 94-99, 106-108, 110-114, 118-119, 121-124, 128-129, 138, 146, 148, 156-157, 160, 165-169, 172-173, 177-182, 184-188, 191-196, 200-202, 206-219, 221, 223, 227-228, 232-234, 239-241, 243, 245, 247-256, 260, 265-269, 272, 279-281, 287, 292, 295, 302, 309-311, 325, 333, 340, 411, 416-418, 426-436, 442-443, 454, 461-466, 468-469, 475-478, 484-485, 489-490, 498, 545, 586, 588-589, 670-671, 677, 695-700, 702-712
Carrier frequency, 61, 71-73, 75, 83, 89-91, 108, 110-111, 119, 121-122, 124, 126, 128-129, 156-157, 178, 184, 187-188, 194, 201, 208-210, 215, 217, 232, 243, 249-251, 253, 255-256, 265-267, 280, 476, 494, 586, 670-671, 677, 702
Carrier leakthrough, 165, 191-193, 202
Carry, 4, 416, 419, 421-423, 426, 444, 485, 515, 544, 655, 684, 696-697, 700, 707-708, 712-713
  chain, 708
  propagation, 423, 684, 707-708, 712-713
Cascade, 21, 702
Cascading, 710
Cathode, 84, 113, 146, 305, 309, 697-698, 703-705
Cavity capacitance, 673
Cavity inductance, 673
Cavity resonators, 652, 670, 672-673, 690, 704
Cavity tuning, 673
Cavity volume, 673
CB synthesizer circuit, 322
CD player, 12, 388
CD-ROM, 445
Cell, 154, 319, 421-422, 458, 460, 492-493, 696-697, 703, 707, 713
cells, 154, 421-422, 579, 702
  solar, 579
Cellular telephone, 412, 492, 697
Center frequency, 39, 129, 133-134, 138, 210, 228, 231-232, 234, 236, 254-255, 263-264, 272-273, 283, 288-289, 329-330, 334, 481, 649, 662, 711
Center-tapped transformer, 510, 554
Ceramic filters, 146, 173-174
Channel, 3, 27-28, 33-34, 57, 60, 111, 136, 148, 157, 173, 200, 216-217, 238-241, 247-248, 251, 253, 280, 283, 287, 289, 296, 319, 321, 323-325, 356, 358, 366, 388, 404-407, 419, 426-428, 434-435, 453-454, 461, 465-466, 469-470, 477, 493-494, 586-587, 697-703, 705-708, 711-713
Character insertion, 405, 413, 712
Characteristic curve, 87, 224
  collector, 87
Characteristic impedance, 503, 511-514, 516,

521-523, 527, 533-534, 536, 539, 549, 551-554, 556-557, 565, 602-603, 620-622, 636, 647, 652, 667, 683, 690, 706, 709
Characteristic wave impedance, 653, 667, 691
Charge, 44, 104-105, 124, 356-357, 430, 449-450, 516-518, 521, 524, 548, 624, 636
chassis ground, 55, 441, 443
Chip, 4, 133, 146, 161, 169, 238-239, 247, 269, 283, 317, 330, 371-372, 425, 481-483, 486-487, 498, 591, 680
Chips, 146, 388, 440, 459, 477-478, 698
Choke, 46, 190, 263, 285, 295, 322, 331, 344, 601
  RF, 190, 263, 295, 322, 331, 344, 601
chokes, 35, 104, 246, 434
Chroma, 698
Chromatic dispersion, 698
Circular horn, 698
Circular waveguide, 661-662, 698
Circular-to-rectangular taper, 661-662
Cladding, 698, 701, 705, 713
Clapp oscillator, 47-48, 56, 65-66, 698
Class C amplifier, 84-85, 92, 104, 112, 232, 243
Class D amplifier, 430
Clear, 53, 146, 186, 439, 441-442, 598
Cliff effect, 698
Clipping, 124-125, 160, 264, 490, 699
Clock, 50, 283, 328, 356, 368, 370, 372-374, 425, 436, 451, 474-475, 477-478, 601, 696, 711
CMOS, 319
CMRR, 510, 554
Coaxial cable, 394, 513-515, 519, 521, 549, 553, 621, 636, 640-641, 667, 670-671, 691, 698
Code Error Detection and Correction, 348, 379
Code noise immunity, 406, 410
Codec, 349, 370-371, 486, 698
Codes, 206, 324, 348, 351, 353, 372-375, 378-379, 381, 387-388, 398-400, 408, 412-413, 459, 472-473, 492, 635, 705-706, 711
Coding, 347-401, 405-406, 408-410, 418-419, 453, 487, 490, 696-698, 700, 706
Coding principles, 348, 375, 398
Coefficient of reflection, 561, 566, 603, 698
Coherent, 464-465, 494-495, 498, 698
Coherent light, 698
Coil, 36, 44, 65, 93, 138, 152-154, 160, 162, 175-176, 244, 271, 447, 449, 490, 609, 625-626, 639-640, 704
Collector, 16, 19-20, 45, 56, 83-84, 86-87, 92, 94, 97, 105, 138, 143, 152, 155-156, 244, 246, 263-264, 269, 291, 305-306, 310, 432, 449, 490, 704
Collector current, 19-20, 87, 105, 143, 264, 306, 449
Collector modulation, 87, 92, 94
Color burst, 698
Color killer, 698
Color subcarrier, 28
Colpitts oscillator, 47, 49, 138, 246, 698
Committed Burst Information Rate (CBIR), 405, 421, 698
Committed Information Rate (CIR), 421, 698
Common, 2, 10-13, 45, 48, 55, 61, 76, 84, 92-93, 95, 97, 104, 129, 133, 138, 142, 154, 169, 206, 262, 264, 279, 308, 313, 316, 335-337, 351, 355, 379, 381, 416, 441, 444-445, 488, 492-493, 503, 516, 546-547, 554, 580, 601-602, 619-620, 677, 701-702
Common mode, 503, 510, 554, 698
Common Mode Rejection, 503, 510, 554, 698
Common-emitter configuration, 93
Communication links and protocols, 412
Communication systems, 6-7, 9, 23, 28, 34, 168, 218, 351, 589, 706
Communications, 2, 4-7, 9, 11-13, 27-28, 31, 34, 43, 52-54, 58, 60-62, 66, 70, 91, 95, 101, 154, 163, 165-170, 172-202, 218, 247, 254, 256, 289, 292, 299-325, 328-345, 349-401, 403-455, 457-499, 503, 546, 568, 575-580, 585, 589-590, 597-598, 600, 602-604, 613, 626, 680, 682, 698-699, 702, 705-710, 712-713
Companding, 349, 365-367, 399, 425, 454, 695
Compandor, 165, 181, 201, 326, 698
Comparator, 259, 271-272, 318, 320, 323, 338, 370-371, 425, 430-431, 449, 462, 490, 701, 707
Compensating network, 395
Compensation, 50, 394, 619
Complement, 444
Complementary pair, 51
Compression point, 313-314, 343
computers, 4, 436-437, 439, 442, 444-445, 535, 590, 697, 704
conductance, 36, 91, 511
Conductivity, 568, 623, 703
conductors, 95, 336, 504-505, 508-511, 514, 516, 544-545, 548, 555, 610, 616, 682-683, 700, 706
  flow, 511, 516, 548, 696
  insulators, 510
Confetti, 698
Confidentiality, 698
Constant-k filter, 3, 42, 698
Constellation pattern, 459, 470, 698
Continuous wave (CW), 45, 178, 433
Controller, 326
Conventional current, 169
conventional current flow, 169
Conversion, 11, 26, 31, 117, 128-129, 133, 135-136, 160, 177, 298-303, 332, 334-335, 342-344, 355, 370-371, 390, 431, 479, 497, 510, 537, 554, 560, 562, 586, 672, 700, 702, 712
Conversion loss, 299, 332, 334-335, 698
conversions, 587
Converter, 151-154, 160, 232, 328, 355-356, 360, 362-363, 366, 368, 371, 390, 401, 406, 469, 593, 695
Converters, 117, 136, 363, 370, 698, 700
copper, 15, 105, 508, 510, 553, 562, 655, 663
Core, 95, 138, 190, 323, 632, 698, 701, 705, 710
Corona discharge, 609, 616, 647, 698
Cosmic noise, 3, 13, 698
Counter, 44, 51, 55-56, 191, 244, 250, 283-284, 318-321, 370-371, 471, 698
  synchronous, 283
Counterpoise, 609, 623-624, 645, 698
Coupling, 23-24, 45-46, 93-95, 97-98, 101, 113, 136, 143, 158, 176-177, 196, 227, 244, 263, 272, 280, 336, 395, 505, 545, 548, 555, 557, 601, 621, 634, 652, 669-672, 683, 690-692, 706
C-Quam AM stereo, 148
CRC dividing circuit, 385, 711
CRC generating circuit, 382, 384, 400, 702
Critical angle, 560-561, 574-575, 602-603, 698
Critical frequency, 561, 573-575, 602-604, 698
Critical value, 263, 698
Crosby systems, 205, 232, 698
Cross-modulation, 117, 136, 262, 287, 699
Crossover distortion, 184
Crosstalk, 331, 408, 444, 503, 505-506, 508, 547-549, 554, 557, 706-707
Cryptography, 698
Crystal, 2, 17, 48-52, 55-56, 61, 65-66, 91-92, 95, 105, 112, 138, 165, 173-175, 177-179, 184, 188, 190, 193, 199-200, 231-238, 249, 283-284, 289, 301-303, 317-319, 322-323, 336-337, 462, 600-602, 699, 702-703
Crystal filters, 173, 175, 302
Crystal oscillator, 48-50, 55, 65, 91-92, 105, 188, 231-236, 238, 249, 283-284, 301, 317, 319, 323, 336, 489, 601-602, 711
Crystal test, 50-51, 55, 66
Crystal-lattice filter, 165, 178, 699
CSMA/CA, 699
CSMA/CD, 699
CSU/DSU alarms, 417, 455
CSU/DSU (channel service unit/data service unit), 417
current, 16-17, 19-20, 25-26, 35, 44, 46, 62, 68, 80-81, 83, 87-88, 90-91, 97, 103-105, 114, 121-124, 142-143, 151, 169, 172, 183, 191, 244, 254, 264, 267-269, 272, 308-310, 314, 337-338, 430, 444-445, 449-450, 455, 476, 488, 490, 505, 510-513, 515-518, 521-529, 555-557, 562, 611-612, 616-620, 623-625, 629, 631, 646-647, 663, 667-668, 706, 709-710
  bias, 17, 19, 46, 88, 97, 103-104, 124, 142, 183, 244, 309, 333, 712
  bleeder, 522
  constant, 122, 124, 142, 268, 449, 515, 631, 646, 696, 699, 712
  conventional, 88, 169, 272, 527, 529
  dark, 699
  electron, 712
  holding, 105
  induced, 490, 548, 616, 668
  leakage, 510, 548
  load, 62, 91, 105, 114, 124, 337, 511, 516, 521-522, 525-528, 531, 534, 555-557, 625, 668, 699-700, 706, 709-710
  measuring, 26, 244, 337
  probe, 449, 488, 490, 671
  source, 16-17, 19-20, 25, 143, 269, 272, 356, 444, 449, 490, 511, 518, 521-527, 562, 611-612, 696, 700
  superimposed, 88
  surge, 512, 555-556
  switching, 123, 308, 337, 404, 430, 710
Current source, 143, 269, 356, 449, 490
  dependent, 143, 269
Cutoff, 17, 21, 39, 43, 45, 63, 126, 197, 388, 390-391, 426, 430, 432, 652, 657-659, 661, 663, 690, 695
cutoff frequencies, 390
Cutoff frequency, 21, 43, 63, 126, 388, 390-391, 432, 657-659, 661, 690
CW radar, 678, 692
Cycle, 45, 74, 76, 86, 108, 121-122, 167, 169, 251, 318, 320, 373, 393, 482, 490, 556, 596, 653, 676-677, 690, 698, 700, 713
Cyclic prefix, 459, 485, 699

## D

Damped, 3, 44, 699
Damper, 699
Dark current, 699
Data, 17, 31, 34, 169, 172, 176, 273-274, 316, 327-328, 350-351, 355, 368-377, 379-388, 390, 393-395, 398-400, 404-406, 411-423, 426, 432, 435-439, 441-446, 449-455, 459-475, 477-481, 483-488, 492, 494-498, 505-508, 545, 547, 549, 554, 580, 584, 588-591, 596, 641, 649, 679, 691, 696-713
Data acquisition, 492
Data encapsulation, 405, 419-420, 699
Data interleaver, 699
Data randomizer, 699
Data register, 371, 386
Data sheet, 17, 169, 172, 449
Data storage, 488
Data terminal equipment (DTE), 444
Data transfer, 421, 437, 443, 445, 696
Data transmission, 380-381, 404, 411, 414-415, 418-419, 421-422, 432, 435, 438, 443, 453, 461-462, 485, 487, 507, 699, 702, 707-709, 713
dB, 2-3, 6-8, 10, 12, 18-26, 32-33, 58, 61-63, 66, 95, 98-100, 113, 149-151, 168-169, 172-173, 175, 178, 181-182, 188, 193-195, 197, 200-201, 223-226, 241, 251, 263-265, 273, 287, 293, 295-296, 304, 307, 313-316, 329-331, 364-365, 391, 399, 401, 438-444, 477, 505, 554, 592-597, 603-605, 614-615, 628, 648-649, 654-655, 684, 686, 691, 695, 697, 709
dB (decibel), 7
dB in communications, 2, 7
dB measurement, 12
dB reference table, 12
DB-25, 438-444
DB-9, 439-440, 442
dBd, 609, 615, 646, 699
dBi, 12, 592-593, 604, 609, 615, 646, 699
dBm, 3, 7-12, 61-62, 98, 113, 116, 143, 149-151, 181-182, 201, 312-316, 332, 334-335, 345, 494, 699, 713
dBm(50), 3, 10, 12, 62, 699
dBm(600), 3, 8, 12, 699
dBm(75), 3, 9, 12, 699
dBW, 3, 10-12, 61, 149-150, 579, 595-597, 605, 699
DC power supply, 13, 104, 263, 331
DC resistance, 522
DC restoration, 699
DC supply, 94, 333
DC value, 310
DDS block diagram, 328-329
Decade, 551-553, 642-643, 686, 688, 699
Decibel (dB), 2
Decoder, 149, 258, 280-281, 283-284, 286-287, 294-295, 366, 406-407, 424-425, 447-450, 490-492
Decoupling, 152
Deemphasis, 205, 224-226, 254, 260, 279-281, 294, 699-700
Delay distortion, 699
Delay equalizer, 699
Delay line, 503, 519, 555, 699
Delay skew, 503, 507-508, 699
Delta match, 609, 621-622, 645, 647, 699

Delta modulation, 367, 405, 424-425, 454, 698-699, 710
Delta modulator, 424-425, 454
Demodulation, 3-4, 61, 164, 167, 181, 184, 187, 199, 223-224, 260, 271, 273, 279, 287, 294, 424-425, 432, 454
Demodulator, 6, 170, 184-187, 201, 260, 272, 279, 284, 289-290, 292-296, 407, 424, 432, 470
Demultiplexer (DMUX), 405, 423, 699
Design ratio, 608, 631
Despread, 459, 478, 699
Detector, 6, 54-55, 101, 116-118, 121-129, 140-143, 147, 156-162, 165, 172, 184, 186-188, 201, 220, 223-224, 235-236, 238, 263-266, 268-272, 280-283, 286-287, 294-296, 300, 305, 309-310, 326, 428-430, 450-451, 678, 699-701, 710-712
Detector diode types, 123
Deviation effects, 212
Deviation ratio (DR), 205, 217, 699
Device noise, 17
Diagonal clipping, 124-125, 160, 699
Dielectric, 36, 504, 508, 510-511, 514-515, 520, 531, 547-549, 554-555, 618, 634-635, 643, 653, 655, 663, 672, 682-684, 690, 693, 700, 707-708, 713
  air, 504, 508, 510, 514-515, 520, 555, 618, 663, 672, 682
  glass, 655
dielectric constant, 514-515, 520, 549, 618, 643, 683, 693
dielectric strength, 531, 663
dielectrics, 357, 515, 549, 616, 683-684
Difference, 14, 19, 23, 27, 58, 61-62, 66, 68, 71, 73-74, 86, 101, 111-112, 126, 128-129, 135-136, 143, 151, 166-169, 177-178, 180, 184, 188, 200, 206, 210-211, 223, 233, 235, 243, 253, 255-256, 262, 268-269, 271, 280, 292, 301-302, 313, 318-319, 338, 342, 348-349, 390-391, 432, 441, 447, 455, 533-534, 566, 622, 649, 690-691, 695-697, 704, 707
Difference equation, 348-349, 390-391, 400, 700
Differential amplifier, 269
Differential GPS, 561, 585, 700
Differential input, 88
Differential phase shift keying (DPSK), 468
Diffraction, 560-561, 567-569, 599, 602-603, 700, 709
Digital, 3-4, 12, 31, 34, 50-52, 55, 57, 65, 176, 186, 207, 242, 283, 298-299, 311, 319, 328, 335, 337, 342, 347-401, 403-455, 457-499, 587, 590-592, 601, 695, 697-701, 703-708, 710, 712-713
Digital audio radio service (DARS), 590
Digital clock, 50
Digital codes, 472, 708
Digital communication, 351, 411, 415, 487, 700
Digital communications analyzer, 242
Digital filter, 388, 391
Digital modulation techniques, 414, 458, 460, 497
Digital multimeter, 52, 55
Digital multimeter (DMM), 52
Digital on-channel repeater (DOCR), 700
Digital signal encoding formats, 348, 372-373, 398
Digital signal processing, 348-349, 351, 388, 390, 399, 483, 487, 700
Digital television, 12, 388, 460, 487, 695, 708
Digital waveform, 393
Digitizing, 359, 362, 364-365, 368, 702
Diode, 10, 25-26, 63, 87-88, 94, 103, 112, 116-117, 122-126, 131-133, 136, 138, 140-143, 146, 154-160, 168-169, 187-189, 191-192, 201, 205, 235, 237-238, 255, 261, 266-268, 287, 290-291, 296, 305-306, 308-309, 322-323, 332, 341, 428, 696, 699-703, 709-710, 712
  laser, 10, 700, 712
  optical, 696, 701, 710, 712
  pin, 87-88, 112, 138, 228, 238, 323, 709
  pn junction, 123-124, 138, 699
  rectifier, 154-155, 189
  reverse-biased, 131, 227, 305, 699
  Schottky, 117, 138, 709
  symbol, 136, 696, 699
Diode capacitance, 131
Diode detector, 116, 122-125, 141-143, 156-160, 168, 187, 266, 309, 699-701, 710
diodes, 16, 83, 87-88, 91-92, 103, 117, 123-124, 133, 136, 138, 146-147, 155, 169, 191-192, 200-201, 227, 252, 267-268, 290-291, 332, 338, 696, 707, 712-713
  characteristics, 133, 138, 169, 696, 712
  germanium, 291
  LEDs, 712
  majority carrier, 138
  rectifiers, 155
  regulator, 155
  silicon, 123, 131, 133, 169, 291
  Zener diodes, 136
Diplexer, 700
Dipole, 544, 608-615, 618-619, 621-622, 627-629, 631-634, 642-649, 680, 693, 695, 699-700, 713
Direct digital synthesis (DDS), 328, 342
Direct sequence spread spectrum (DSSS), 477
Directional, 577, 585, 598-599, 609, 614, 627, 632, 637, 647-649, 652, 669-670, 674, 685, 693, 695-696, 700
Directional coupler, 637, 652, 669-670, 685, 691, 693, 700
Director, 609, 628, 634, 648, 700
discharging, 611
Discriminator, 205, 220, 232-233, 255, 258-260, 263, 265-268, 272, 279, 288, 294-296, 428, 700, 702, 704, 708
Disk, 176, 183, 189, 359, 387, 673
Dispersion, 698, 700, 705, 707-708, 713
Dispersion compensating fiber, 700
Dissipation, 3, 36, 63, 647, 700
Distortion, 24, 29, 34, 44-45, 57, 62-63, 69, 77, 82, 85-86, 91, 98-101, 113, 121-124, 135-136, 151, 168, 176, 184, 194, 232-233, 241, 261-262, 269, 287, 313-316, 334, 342, 345, 358-359, 393-395, 398, 471, 484, 508, 576, 598, 695-696, 699, 704, 706, 709-711
Distributed feedback laser (DFB), 700
Dit (decimal digit), 409
Diversity reception, 561, 577-578, 604, 647, 700, 710
Divide circuit, 385-386
Division, 31-33, 89, 113, 155, 205, 237-238, 240, 256, 318, 320-321, 338, 367, 381, 383-385, 404-405, 416, 422, 426, 458-460, 483, 489, 697-699, 701-702, 705-706, 711, 713
Divisor, 384
Dmin, 349, 375-377, 399, 703, 705
DMM, 52, 55, 152-154, 192, 196, 238, 247, 290-292, 296
Dolby system, 205, 226-227, 700
Domain, 3, 31-32, 63, 98, 101, 424, 482, 545-546, 554, 586-587, 702, 706, 711
Dominant mode, 652, 657-658, 661, 664, 667, 690, 693
Doppler effect, 653, 678, 690, 692, 700
Double conversion, 117, 135, 298-301, 303, 342, 344, 700
Double range echoes, 653, 676, 692, 700
Doubler, 172, 232-233, 241, 255, 279
Double-sideband suppressed carrier (DSBSC), 248
Double-stub tuner, 503, 539, 541, 667, 700
Downlink, 561, 578, 580, 583, 585-586, 589-590, 594-597, 604-605, 700
Download, 590
Drain, 136, 178, 188, 233-234, 263, 283, 356
Driven array, 609, 628, 630, 649, 700
Driven collinear array, 628, 645
Driver amplifier, 69, 93, 700
DS-1 to DS-3, 416
DS-4, 416
DSB, 169, 177-178, 180, 184-186, 191, 200, 202, 223, 279-280, 697, 705
DSP (digital signal processing), 487
Dual-gate MOSFET, 136, 138, 295
Dual-slope ADC, 370
Dummy antenna, 69, 101, 113, 700
duty cycle, 251, 393, 426, 429, 653, 676-677, 690, 692, 700
Dwell time, 459, 475, 498, 700
Dynamic convergence, 700
Dynamic range, 12, 117, 151, 161, 182, 226-227, 262, 264, 298-299, 307, 312-316, 342-343, 345, 363-365, 398-399, 401

## E

E field, 563, 610, 656-657, 659, 664-665, 668, 670-671
E1 and E3, 417
earth ground, 623, 698
Earth satellite measurements, 587
Earth station, 561, 578, 582-583, 586-588, 592-597, 604-605, 700-701, 704, 712
Echo signal, 653, 674, 676, 701
eddy currents, 616
Effective noise bandwidth, 22
effective resistance, 616
Effective value, 616
efficiency, 80, 82, 84, 86, 123-124, 243, 408-410, 430, 453, 488, 596, 605, 608, 610, 616, 709
Electric circuit, 565
Electric field, 36, 45, 547-548, 562, 565-566, 568, 657, 659, 667, 670-671, 690, 707
Electrical length, 503, 532-534, 554, 618, 638, 647, 701
Electrical noise, 2-3, 6, 11, 60-62, 701, 710
Electromagnetic field, 505, 562
Electromagnetic force, 516
electromagnetic interference (EMI), 308, 562, 598, 605
Electron, 312, 703-705, 709, 711-713
  free, 709, 711-712
Electron beam, 703, 709, 711-713
Electronic, 1, 4, 7, 13-15, 25-27, 44, 52-56, 58, 101-102, 130, 133, 142, 146, 160, 195, 259, 271, 292, 297-298, 330-332, 334, 360, 388, 428, 436, 445, 451-452, 578, 676-677, 706-708
Electronic serial number (ESN), 492
Electronic tuning, 130, 133, 146, 160
electrons, 13-14, 511, 515, 562, 572, 701, 703, 711-712
Element, 41, 48, 91, 197, 219, 261, 330, 441, 543, 554, 566, 610, 622-623, 627-630, 634, 643-644, 707, 709, 713
Elevation, 571, 581, 583-585, 604, 674, 704
Emitter, 16-17, 45, 84, 92-93, 103-104, 138, 142, 151-153, 155, 161, 172, 238, 244-246, 269, 291, 701, 711
Emitter bias, 153
Emitter current, 172, 309
Emitter-follower, 430
Emphasis circuits, 225
Emphasis curves, 225
Encoder, 366-367, 370-371, 424, 448-450, 490-492, 699, 709-710, 712
Encryption, 704
End-of-message (EOM), 380
Energy, 6, 13, 35-36, 41, 44-45, 87, 94, 106, 178, 212, 216, 219, 249, 329, 405, 411, 453, 504, 511, 515-516, 520-522, 524-527, 530-531, 543, 547-548, 555-557, 566, 577, 602, 610-612, 614-616, 621, 624-625, 627-630, 639-640, 652, 660-661, 666-670, 672, 674-676, 680, 685, 690-692, 695, 700-704, 706, 708-711
  flyback, 702
  inductor, 36, 41, 44-45, 516, 521, 524, 543, 625, 698, 702-703, 708
  potential, 44, 524, 562
Energy per bit, 405, 411, 453, 701
Entity, 487, 568
Envelope, 72-74, 88, 96-97, 112, 117, 123, 126, 129, 140-141, 143, 149, 158, 167, 266, 428, 701, 707
Envelope detector, 117, 123, 126, 149, 428, 701
Equality, 94
Equatorial orbit, 580, 701
Equivalency, 518, 543
Equivalent bandwidth, 21
Equivalent circuit, 43, 48, 173-174, 176, 200, 511, 554
Equivalent noise resistance, 24, 66, 701
Equivalent noise temperature, 23, 63, 66, 593, 701
Error, 26, 34, 102, 105-106, 113, 181-182, 186, 271-272, 293, 299, 318, 323, 338, 348-351, 355, 358-360, 365, 375-377, 379-382, 385-387, 398, 400-401, 404-406, 410-412, 414, 418, 423, 431, 453, 462, 470, 493-494, 696-697, 699-705, 707-709, 711-712
Error correction, 377, 387, 398, 412, 712
Error detection, 348, 351, 377, 379-381, 398, 412, 418, 707
Error detection and correction, 348, 377, 379, 398
Error probability, 404-405, 410-411, 453, 696, 701
Error voltage, 272, 293, 299, 318, 701
Ethernet, 374, 385, 508, 681-682, 699, 705, 710
Even parity, 379-380, 387
Event, 86, 186, 701
Excess noise, 3, 17, 19, 701
Exciter, 205, 233, 335-337, 578, 701-702, 712
Exclusive-OR, 269, 429
External attack, 701
External noise, 3, 12-13, 16, 62, 66, 119, 206, 220,

308, 508, 696, 701, 703
Eye patterns, 458-459, 471, 701

F
Facsimile (FAX), 446
Fading, 168, 199, 434, 436, 461, 477, 487, 569, 576-577, 598, 602, 604-605, 696, 701, 708
fall time, 393-394
Far field, 609, 612-613, 641, 701
Faraday rotation effect, 701
Feed line, 609, 619-620, 622, 631-632, 647, 701
Feedback, 45, 56, 66, 91, 138, 142, 145, 151, 155, 228, 232, 236, 245-246, 260, 271, 305, 318, 381-385, 400, 473, 700, 702-703, 706-707
  negative, 142, 232, 260, 271, 305, 381, 696, 706-707
  positive, 45, 66, 138, 305, 698, 706
Feedthrough, 237
Ferrite bead, 237, 701
Fiber, 372, 417, 654-655, 696, 698-702, 704-706, 709-711, 713
  connectors, 709-710
  dB loss, 654
Fiber Bragg grating, 701
Fiber optics, 654
Fiber-optic strand, 701, 704
Field, 4, 17, 36, 44-45, 113, 271, 353, 356, 505, 511, 516-517, 524, 547-548, 557, 562-563, 565-566, 603, 608-616, 618, 630-631, 640-641, 645-646, 649, 656-657, 659-661, 664-665, 667-673, 682, 690, 703, 705-708, 712-713
Figure of merit, 314, 506, 560-561, 592-594, 596, 604, 701, 711
Filter, 3, 24-25, 34, 37-40, 42-43, 63, 65, 71, 92, 94-95, 104, 121-122, 124, 126, 133, 137-138, 140-143, 149, 155, 164-165, 172-178, 180, 188-189, 193-194, 197-201, 233, 269, 271-272, 279-281, 289, 292-293, 303, 305, 318, 323, 325-326, 328, 336, 338, 340, 344, 371-372, 388-392, 400, 430, 432, 434-435, 462, 464-466, 471, 476, 494-497, 544-545, 695-701
  active, 358, 388-389, 695
  antialiasing, 349, 356, 358, 368, 695
  band-reject, 38
  Bessel, 43, 696
  Butterworth, 43, 65, 165, 188, 389-392
  Chebyshev, 43, 65, 197
  EMI, 308, 598
  high-pass, 197, 199, 280, 598, 657, 700
  LC, 38-39, 42-43, 65, 138, 173-175, 178, 188, 233, 269, 289, 430, 434, 697-699, 703, 711
  low-pass, 34, 63, 121-122, 126, 185-186, 201, 233, 269, 271-272, 279-281, 318, 323, 338, 388-391, 428, 430, 432, 434, 464, 466, 476, 494-496, 695, 699-700, 703
  notch, 38, 165, 174, 709
  power supply, 104, 155
  reconstruction, 372
filters, 42-43, 61, 65, 105, 138, 146, 149, 164, 172-175, 177, 188, 193, 199-200, 283, 302, 318, 330, 342, 393, 397, 544-545, 554, 598, 707, 710-711
  double-tuned, 138, 283
  passive, 388-389, 393, 707
Firewire (IEEE 1394), 405, 437
First detector, 117, 129, 160, 701
Flag, 413
Flap attenuator, 668
Flat line, 341, 419, 503, 531, 701
Flat-top sampling, 349, 357-358, 399, 701
Flexible waveguide, 663, 665, 685, 691
Flicker, 17, 702
Flip-flop, 425, 432
  D, 425
Flow control, 405, 413, 421, 442-443, 702
flux, 513, 515, 575
Flux density, 515
Flyback transformer, 702
FM receiver, 62, 220, 222-224, 233, 239, 254, 258, 260, 263-265, 273, 283, 287-288, 292-295, 310, 428, 462, 636-637, 697, 699-700, 702, 704
  block diagram, 258, 260, 294-295
  limiters, 258, 260, 263
  phase-locked loop, 258, 295, 462
  RF amplifiers, 258, 260, 294-295
  stereo demodulation, 258
Focal length, 638
Focal point, 638, 706
Folded dipole antenna, 632
Foldover distortion, 349, 358-359, 398
Footprint, 561, 579-580, 585, 595, 604, 702
For loop, 671
Forward bias, 88, 142, 146, 291
Foster-Seely discriminator, 266-268, 294-296, 702
Fourier analysis, 2-3, 29, 31, 34, 61, 63, 702
Fourier expressions, 30
Fourier series, 29
Fractional T1, 405, 416, 454, 702
Frame error rate, 494
Frame frequency, 702
Frame relay, 404-405, 416, 421, 453-454, 698, 702
Frame synchronizer, 702
Framing, 405, 412-413, 416-418, 699, 701-702
free electrons, 14, 711
Free space, 70, 520-521, 560-561, 563, 565, 571, 593-594, 602-603, 615, 617-618, 642-643, 646, 660, 667, 691, 696, 702, 709, 712
frequencies, 4-6, 13-15, 17, 19-21, 28-29, 31, 33, 35-38, 42-43, 47-50, 52, 56, 58, 60, 63, 66, 69-71, 73-74, 77, 79, 83-88, 90-91, 93-95, 98, 101, 105-106, 111-112, 114, 116, 118-119, 121-123, 126, 128-130, 133-136, 138, 152, 160, 166, 168, 172-174, 180-181, 184, 197-198, 201, 212, 216-221, 224-227, 238-239, 247, 254-255, 260-264, 279, 283, 292, 316-321, 325, 328-332, 338-340, 342-343, 390-392, 395-398, 432, 435-436, 461-462, 472, 476, 509-510, 515, 544-545, 550, 566, 572, 583, 586, 600, 621-622, 625, 657, 661-663, 668, 681-682, 684, 695, 697, 699-707, 709-713
  band, 28, 33, 38, 74, 93-95, 119, 128, 130, 133-134, 160, 162, 173, 184, 238, 255, 273, 287, 319-321, 343, 358, 579-580, 583, 654, 662-663, 695, 697, 700, 703-704, 712-713
  corner, 712
  half-power, 21, 308
  natural, 4, 48, 224, 264, 358, 657
  resonant, 36-38, 47-48, 56, 66, 83, 95, 101, 160, 173, 176, 227, 545, 600, 625, 639, 642, 672, 689, 701-702, 709
  square wave, 29, 31, 33, 58, 60, 63, 112, 395, 415
  transformer, 86, 93-94, 138, 178, 510, 544, 621-622, 702
Frequency, 3-6, 12-14, 17, 19, 21, 24, 28-29, 31-34, 36-48, 50-52, 54-63, 65, 68, 70-76, 79-80, 85-87, 89-92, 97-102, 105-106, 108, 110-114, 117-122, 124, 126, 128-136, 140, 143, 146, 148-149, 151-152, 156-157, 159-162, 172-178, 180-181, 184-188, 191-196, 198-199, 201, 203-212, 214-229, 231-256, 257-273, 279-281, 283-284, 287-296, 300-304, 311, 316-319, 323-325, 328-338, 340, 342-344, 357-360, 388-391, 393, 395-399, 401, 406, 411, 414-415, 426-429, 432, 436, 446-447, 454, 458-466, 469, 471-472, 481-483, 485-487, 489-490, 496-498, 509-511, 520-521, 536, 545, 548, 551-555, 561-562, 572-578, 580, 582-583, 596-605, 624-626, 637, 647-649, 652-659, 661-663, 667-674, 677-682, 695-713
  3 dB, 19, 21, 225, 316, 343, 594, 597, 631
  break, 105, 336
  carrier, 4-6, 12, 61, 70-76, 79-80, 83, 85-87, 89-92, 94-95, 97-99, 106, 108, 110-114, 118-119, 121-122, 124, 128-129, 138, 146, 148, 156-157, 160, 165-168, 172-173, 177-178, 180-181, 184-188, 191-196, 201, 214-219, 221, 223, 227-228, 232-234, 239-241, 243, 245, 247-256, 260, 265-269, 272, 279-281, 287, 292, 302, 311, 325, 333, 340, 411, 426-429, 432, 454, 461-466, 469, 489-490, 494, 545, 586, 670-671, 677, 695-700, 702-712
  center, 39, 60, 89-90, 119, 129, 133-134, 138, 156, 172, 196, 209-210, 228, 231-232, 234, 254-255, 262-264, 267-268, 272-273, 283, 288-289, 329-330, 334, 481, 536, 554-555, 587, 619-620, 649, 657, 662, 668-670, 698, 702, 710-712
  critical, 17, 54, 114, 181, 262-264, 296, 317, 358, 360, 561, 573-575, 602-605, 619-620, 624, 649, 663, 680, 698
  difference, 14, 19, 58, 61-62, 68, 71, 73-74, 86, 101, 111-112, 126, 128-129, 135-136, 143, 151, 166-168, 177-178, 180, 184, 188, 206, 210-211, 223, 233, 235, 243, 253, 255-256, 262, 268-269, 271, 280, 292, 301-302, 313, 318-319, 323, 334, 338, 342, 390-391, 399, 432, 447, 534, 649, 690, 695-697, 702, 704, 707
  fundamental, 29, 58, 99-100, 111, 113, 406, 414, 426, 642, 649, 703, 709, 712
  intermediate, 128-129, 134-135, 160, 180, 263, 300, 323, 325, 343, 700-701, 703-704
  lower-side, 71, 73, 79, 98
  midrange, 17
  motor, 308
  Nyquist, 31, 57, 348, 358-359, 390, 396, 398, 401, 426, 695, 706
  oscillation, 45, 47, 56, 86, 105, 112, 129, 136, 138, 331, 698, 706
  pulse repetition, 653, 674, 677, 692, 700, 708
  radio, 4-5, 12-13, 24, 28, 36, 43, 45-46, 54, 65, 85, 91, 98, 106, 111-114, 117-119, 121-122, 128-129, 132, 140, 151-152, 159-161, 178, 191, 195-196, 217, 239, 241-243, 247, 253-254, 263, 283, 287, 295, 300, 317, 337, 340, 343, 388, 399, 432, 459-460, 485-487, 497-498, 520, 554-555, 568, 573-575, 597-598, 602-605, 639, 652, 656, 695-698, 701-705, 708-713
  side, 41, 68, 71, 73-74, 79-80, 98, 111-112, 121, 128, 166, 212, 214, 216-219, 317, 325, 343, 357, 436, 536, 596, 632, 663, 669-670, 711
  sum, 58, 71-72, 74, 76, 86, 112, 121-122, 126, 128, 136, 166, 177, 239, 256, 267-268, 280, 292, 334, 338, 397, 462, 707, 712
  unity gain, 181
  upper-side, 71, 73
Frequency conversion, 31, 128-129, 133, 136, 298, 300, 702
Frequency converter, 232
Frequency deviation, 131, 205, 209-210, 212, 216-217, 220-222, 234, 253-254, 263, 265, 267-269, 699, 702
Frequency diversity, 487, 578
Frequency division, 238, 458-460, 483, 561, 582, 586, 705-706
Frequency division multiple access (FDMA), 586
Frequency domain, 3, 31-32, 63, 98, 586, 702
Frequency domain record, 3, 31-32, 702
Frequency hopping, 342, 459, 472, 475-476, 497-498, 701-702
Frequency measurement, 108
Frequency modulation (FM), 5, 206, 208, 252
Frequency multiplexing, 205, 239-240, 702
Frequency multiplication (doubler), 233
Frequency multiplier, 335, 337
Frequency multipliers, 205, 232, 235, 336, 344, 462, 702
Frequency noise effects, 17
Frequency response, 21, 41, 63, 90-91, 101, 224, 301, 303, 389, 414
Frequency reuse, 702
Frequency shift keying (FSK), 251, 461
Frequency spectra, 28, 52, 58-59
Frequency spectrum, 5, 28, 74, 168, 215-216, 247, 414, 436, 477, 485, 498
Frequency synthesis, 130, 273, 298, 317
Frequency synthesizer, 3, 50, 298, 317-318, 325, 328-329, 335, 344, 476, 700, 702, 707
Frequency-division multiplexing, 205, 240, 256, 702
Frequency-modulation circuit, 250
Front porch, 702
Front-to-back ratio, 609, 628, 702
FSK generation, 462
Full-duplex, 412-413, 704
Full-wave rectification, 184
Function, 4, 15, 21, 45, 54, 58-60, 63, 90-91, 95, 97, 101-103, 112-113, 128, 131-132, 140, 146, 148, 154, 161, 172, 184, 199, 209, 227-228, 238, 250, 255-256, 260-261, 271-272, 294, 305, 308, 313, 332-335, 338, 381, 396, 411-412, 418, 426, 430, 518, 544-545, 557, 614, 631, 634-635, 669, 691-692, 695-696, 700, 708-709, 712-713
Function generator, 58-59, 102-103, 250, 255, 333, 335, 396
Fundamental frequency, 29, 99, 393, 545, 703, 709

Fuse, 105, 154-155
fuses, 52-53
Fusion splicing, 702

## G

Gain, 7, 9-10, 12, 16, 21-22, 45, 54, 61-62, 66, 83, 88, 90-91, 113, 116, 118, 128, 138, 140, 142-143, 146, 149-150, 181, 190, 200, 207, 220, 244-246, 259, 261-263, 265, 287, 292-293, 295, 304-307, 309-310, 315-316, 340, 344-345, 367, 425, 436, 449-450, 470-471, 492, 592-593, 604, 608-609, 613-615, 627-630, 641, 645-646, 648-649, 695-696, 698-699, 702, 704
  open-loop, 90-91
Gallium, 20
Gallium arsenide, 20
Gate, 135-136, 138, 160, 188, 233, 262-263, 269-270, 283, 295, 337-338, 356, 380, 382, 473-474
Gateway, 583, 590
Generator, 15, 25-26, 52, 54-56, 58-59, 63, 88, 90-91, 101-103, 108, 111, 152, 164, 178, 181, 192, 194, 196, 201, 207, 209-210, 228, 243, 247-251, 253, 255, 287-290, 333, 340, 382-386, 396, 430, 450-451, 473-478, 498-499, 511, 527-529, 531, 533, 536-537, 543, 545-546, 557, 612, 619, 677, 686, 704
  pulse, 207, 396, 432, 451, 499, 545-546, 557, 677
  signal, 25-26, 52, 54-56, 58, 63, 88, 90-91, 101-103, 108, 111, 152, 178, 181, 192, 194, 196, 201, 204, 209-210, 228, 243, 247-248, 250-251, 253, 255, 287-290, 333, 340, 396, 430, 450, 476-478, 527, 686, 704
Geostationary orbit, 561, 578-579, 587-588, 591
Geosynchronous orbit, 582, 702
Germanium, 291
Ghosting, 331, 560-561, 569-571, 599, 603, 605, 702
Glass, 189, 567, 655, 701-705, 711
gold, 663
Graded-index fiber, 702
Gray code, 349, 354-355, 399, 702
Ground, 55, 103-105, 152, 154-155, 158, 188-189, 198, 263, 281, 309, 323, 325, 330-331, 357, 394, 437-439, 441, 443-444, 490, 508, 544-545, 560-561, 568-569, 575-576, 578, 602-604, 616-618, 622-626, 635-636, 682-683, 693, 696, 698, 707-708, 710-712
Ground effects, 616, 645
Ground reflection, 616, 623
Ground wave, 561, 568-569, 575-576, 604, 624-625, 645, 702, 708, 711
grounding, 443, 449, 490, 635-636
Guard bands, 205, 216-217, 253, 702
Guard times, 405, 423, 703
Guarding, 189
Guide wavelength, 652, 660, 691
Gunn oscillator, 703, 709

## H

H bend, 664
H field, 656-657, 671, 673
half-power frequencies, 21, 308
Half-wave dipole, 608, 610-612, 614-615, 619, 622, 627, 629, 632-633, 642-643, 645-649, 713
Hamming code, 348-349, 386-387, 398, 703
Hamming distance, 348-349, 375, 388, 398, 400, 703
Handoff, 703
Handshaking, 405, 412, 442, 455, 703
Hardware, 351, 388, 390, 419-420, 706
Harmonic, 29, 31, 33-34, 58, 60, 63, 69, 92-93, 105, 113, 121-122, 186, 232-233, 244, 248, 269, 336, 344, 395, 397, 434, 545, 557, 649, 709-711
Harmonic distortion, 69, 99-100, 113, 232, 269, 287, 709, 711
Harmonic distortion measurements, 99
Harmonics, 29, 31, 33, 58, 60, 63, 71, 100-101, 106, 112-113, 121, 128, 186, 244, 359, 393, 432, 544-545, 703, 711
Hartley oscillator, 45-47, 283, 703
HD radio, 459, 485-487, 498, 703
heat, 184, 250, 557, 667-668, 685
Heat sink, 184
Helium, 20, 509
Hertz, 414, 565, 612
Heterodyne detector, 117, 124, 703
Heterodyning, 188
Heterojunction, 703
High-frequency effects, 17, 43
High-frequency response, 224, 303
High-level modulation, 69, 84-86, 112, 703
High-pass filter, 197, 199, 280, 598, 657, 700
Hit, 459, 477, 498, 703
Hold, 249, 259, 272-273, 355-357, 396-399, 443, 448, 450, 490-491, 695, 703, 708
Hold capacitor, 356-357, 450
Hold time, 356
Hold-in range, 259, 273, 703
Hole, 189-190, 669
Hopping sequence, 475, 703
Horizontal deflection, 96
Horizontal resolution, 703
Horizontal retrace, 703
Horn antenna, 693, 698, 703, 708-709
Host processor, 486
Human-made noise, 12-13, 703
Hybrid tee, 664, 666, 691, 693
Hydrogen, 579
hysteresis, 497

## I

IC, 19-20, 49-50, 80-81, 83, 138, 146, 148, 188, 200, 238-239, 247, 264, 271, 283, 287-288, 306, 325, 338, 437, 450, 475
IC crystal oscillator, 50
IC package, 271
IDE (Integrated Drive Electronics), 445
Ideal diode, 124
Idle channel noise, 349, 366, 703
IEEE, 374, 405, 437, 445, 701-703, 713
IEEE 1394, 405, 437, 445
IEEE 1394a, 437, 701
IEEE 1394b, 437, 701
IF amplifiers, 116, 128-129, 133, 138-139, 187, 195-196, 260-261, 264-265
IF frequency, 128-130, 134, 136, 143, 152, 187, 196, 261, 269, 287-288, 292, 300-304, 462, 698
IF/AGC amplifier, 143
IIR Filter, 349, 390, 703
Image antenna, 609, 623, 647, 703
Image frequency, 117, 133-135, 159-161, 261, 294, 300-304, 342-343, 703
Impatt diode, 703
Impedance, 8-9, 25-26, 36-38, 41, 48-51, 56-57, 61, 63, 65, 83, 92-95, 101, 105-106, 114, 135, 150, 173, 201, 225, 228, 246, 261, 263, 287, 356-357, 393-395, 502-503, 508, 511-514, 516, 521-525, 527, 530, 533-537, 543, 545, 549-557, 568, 600, 602-603, 611-612, 618, 620-623, 625, 631-634, 636-638, 640, 642-643, 645-648, 665, 667-668, 683, 689-691, 695, 697
  series RLC, 36-37, 553, 600
impedance matching, 356, 620-621, 645, 665, 683, 695, 699
impedances, 7, 16, 201, 536, 547, 552, 556, 634, 682
  maximum, 7
  measurements, 7
  reflected, 556, 706
  Y, 536
Implementation, 126, 199, 292, 330, 474, 587
IMT-2000, 703
In-band, 459, 485, 703
In-Band On-Channel (IBOC), 459, 485, 703
Incident wave, 527, 529-530, 539, 566-567
Inclined orbit, 582, 591
Independent sideband transmission, 165, 167, 703
Index matching gel, 705
Index of refraction, 698, 701-703
induced voltage, 668
Inductance, 35-36, 39-40, 43, 45, 63, 95, 129-130, 162, 199, 267, 330, 337, 449, 488, 511-515, 519, 554-555, 557, 619, 672-673, 704
Induction field, 608-609, 612-613, 616, 641, 701, 703
inductors, 15, 21, 35-36, 40, 42-43, 45, 49, 52, 57, 95, 101, 132, 244, 330, 393, 511, 517, 522, 524, 543-544, 637
  magnetic field, 36, 511, 524
Information and bandwidth, 2, 27
Information theory, 3, 28, 63, 410, 703
Infrared, 5, 460, 703
Infrared light, 460, 703
Inlays, 680, 693
Input, 7, 9, 11-12, 16, 18, 21-22, 24-25, 27, 31, 33, 45, 50-51, 54, 57, 61-63, 66, 71, 82-84, 86-95, 101-103, 105-107, 113, 118, 121-126, 128-129, 149-153, 155-159, 174-176, 178-179, 181-188, 191-194, 197, 201, 217, 222-223, 225, 228, 232-240, 244-245, 248-251, 253-255, 260-272, 280-283, 287-290, 292, 295-296, 299, 310, 313-316, 318-321, 323-324, 328, 332-335, 343-345, 355-359, 362-368, 383, 389-392, 395-398, 400-401, 406-407, 423-425, 462-466, 478, 481, 490, 494-496, 498, 502, 525-527, 532-534, 551-552, 555-556, 578, 596, 598, 611-612, 615-620, 623, 625, 630-634, 636-637, 699-704, 706, 708-711
Input buffer, 357
Input capacitance, 101, 261, 697
Input end, 511, 555
Input impedance, 25, 50, 94, 106, 135, 150, 228, 250, 261, 287, 502, 512, 533-534, 537, 551-552, 556, 612, 616, 623, 625, 631-634, 636-637, 695, 697, 708-709
Input intercept, 299, 314, 703
Input offset voltage, 88
Input power, 82, 124, 150, 313-314, 335, 598, 617, 655
Input resistance, 16, 357, 532
Inquiry procedure, 703
Instance, 119, 140, 149, 305, 410, 442, 488, 531, 630-631
Instruction, 193
instrumentation, 25, 317, 440
Instruments, 25, 190, 390, 545-546, 549
insulators, 510, 618, 636, 638
Integer, 232, 318, 321, 409, 702
Integrated circuit, 111, 199, 237, 271, 289, 317, 705, 708
integration, 4, 269, 388, 413
Integrator, 233-234, 424-425, 431, 450, 490, 492, 696, 703
Integrity, 703
Intelligence signal, 3-4, 6, 13, 61, 70-74, 76-78, 81-82, 85-88, 94-98, 111-112, 114, 121, 124, 166, 177, 180-181, 184, 186, 195, 210-211, 219, 221, 227, 233, 243, 253, 256, 265, 426-427, 695-696, 705-708
Interaction space, 703
Intercarrier systems, 703
Interfacing, 439
Interlaced scanning, 704
Intermod, 299, 313, 704
Intermodulation distortion, 259, 262, 313-316, 342, 345, 704, 711
Intermodulation distortion testing, 316
Internal attack, 704
Internal noise, 3, 12-14, 62, 222, 254, 704, 711
Internal resistance, 124
Internet, 300, 472, 590
Interrupt, 591
Interrupted continuous wave (ICW), 433
Intersymbol interference (ISI), 405, 423, 484, 704
Intrinsic, 565, 707
Inversion, 373-374, 418, 695-696
Inverter, 241, 280, 380, 494
Inverting amplifier, 464, 495
Inverting input, 155, 430, 490
Ion, 573
Ionization, 572-573, 616, 703
Ionospheric layers, 572, 602
Ionospheric storms, 577
IP telephony, 704
ISA bus, 445
ISA (Industry Standard Architecture), 445
Isolation, 46, 332, 704
Isolators, 704
Isothermal region, 561, 571, 704
Isotropic point source, 560-561, 563, 602, 614, 695, 704

## J

JFETs, 262
Johnson noise, 3, 14, 62, 704
Junction, 17, 47, 49, 103-104, 123-124, 136, 138, 227-228, 244, 287, 291-292, 356, 699, 703, 709
Junction capacitance, 47, 124, 138, 227-228, 709
Junction field-effect transistor (JFET), 356

## K

Kelvin, 14, 16, 23, 593
Key, 3, 52, 128-129, 157, 205-206, 331, 337, 341, 388,

422, 426, 433-434, 436, 553, 704
Keying, 69, 95, 178, 251, 337, 433-434, 459-463, 466, 468, 497-498, 681, 696, 702, 707-708
Klystron, 704, 712
Knee, 87, 259, 264, 704
Knee voltage, 259, 264, 704

## L

Language, 659, 713
Laser, 10, 12, 355, 359, 446, 700, 704-705, 712
Laser diode, 10
Lasers, 426, 712
Latch, 370
Latency, 704
Lattice modulator, 165, 169, 704
LC bandpass filter, 39, 65
LC circuits, 2, 35, 41, 58, 60, 138
LCD, 493
Leading edge, 20, 124, 393
Leakage, 3, 36, 51, 65, 394, 509-510, 547-548, 704
Leakage current, 510
LEDs, 712
Library, 200
LIC stereo decoder, 281
Light pipe, 701-702, 704
Limiter, 126, 205, 220, 244-245, 252, 254, 263-265, 284, 286-289, 294-296, 308-309, 343, 702, 704
Limiters, 258, 260, 263
Limiting circuit, 263
Limiting knee voltage, 259, 264, 704
Line attenuation, 516, 539
Line coding formats, 418
Line control, 405, 413, 704
Linear, 70-71, 83-86, 88, 91-92, 97, 111, 114, 121-122, 135, 143, 167, 177-179, 181, 190, 194-195, 199, 201, 243, 265-266, 268, 313, 323, 349, 399, 424-425, 449, 490, 552, 704
Linear delta modulation, 424
Linear quantization levels, 365
Linear region, 265
Linearity, 88, 97, 194-195, 202, 216, 228, 232, 470-471, 698, 701
Line-of-sight, 241, 568-569, 654, 708, 710
Lines of force, 611, 668
Listener, 11, 239, 598, 678
Load, 7-10, 12, 15, 21-22, 58, 62, 91, 101, 105-106, 114, 124, 135, 154-155, 167, 190, 192-193, 238, 243, 249-250, 319, 383, 447, 511, 516, 525-528, 530-534, 536-537, 539, 543-545, 554-557, 625, 644, 668-669, 685-686, 693, 699-700, 708-710
Load current, 114, 522, 526
Load end, 511
Loaded antenna, 626
Loaded cable, 704
Loading, 49-50, 101, 153, 395, 609, 625-626, 648, 670, 704
Loading coil, 609, 625-626, 648, 704
Loading effect, 101, 153, 670
Lobes, 599, 609, 628, 704
Local area networks, 374, 460, 705
Local bus, 445
Local loop, 704
Local oscillator, 127-129, 132, 134-138, 143, 149, 151, 153, 160-162, 184, 187-188, 195-196, 259-262, 272, 279, 283, 292, 294, 300-303, 308, 317, 334-335, 343, 447, 469, 490, 678, 693, 696, 701, 704, 711
Local oscillator reradiation, 259, 261, 294, 704
Lock range, 272, 704
Locked, 146, 182, 204, 235, 238, 252, 258-259, 269, 271-274, 294-295, 317-318, 323, 338, 412, 462, 478, 702-704, 711
Log scale, 193
Logarithm, 409, 631, 683
Logarithmic, 193, 372
Logarithms, 7
Logic, 3, 52, 238, 319-320, 323, 328, 335, 337-338, 363, 370-371, 394, 450-452, 462-463, 475, 478, 549, 601
Logic analyzer, 52, 451-452
Long haul, 704
Longitudinal redundancy check, 349, 380, 704
Look angle, 561, 583, 704
Loop, 45, 90-91, 146, 149, 182, 204, 235, 238, 252, 258-259, 269, 271-274, 294-295, 317, 319, 323, 325, 338, 372, 462, 496, 631-632, 639-640, 645, 648-649, 670-671, 704
Loop gain, 45, 259, 273, 696, 704
Loopback, 405, 418, 455, 470-471, 497, 704
Loss test, 686
Lossy waveguide, 688
Low earth orbit (LEO), 561, 582
Lower sideband, 69, 74, 79, 121, 174, 177, 180, 188, 198, 240, 704
Low-level modulation, 68-69, 84-85, 88, 111-112, 243, 704
Low-noise resistor, 3, 15, 62, 705
Low-pass filter, 34, 63, 121-122, 126, 185-186, 201, 233, 269, 271-272, 279-281, 318, 323, 338, 388-389, 432, 434, 464, 466, 476, 494-496, 695, 699-700, 703
low-pass filters, 318
Luminance, 29, 705

## M

MAC address, 705
Macrobending, 705
Magnetic field, 36, 44, 511, 516, 524, 547-548, 557, 562, 611, 631, 656-657, 667, 671, 701, 713
Magnetic flux, 513
Magnetron, 698, 703, 705
Magnitude, 11, 14, 308, 362, 365, 389, 545, 557, 646, 654
Majority carrier, 138, 709
Manchester coding, 374
Marconi, Guglielmo, 4
Mark, 178, 372-374, 405, 408, 433, 454, 461, 493, 641, 705, 713
Maser, 705
Master subsidy lock, 492
Matrix, 205, 240-241, 256, 279-280, 282, 296, 705
Matrix network, 205, 240-241, 256, 280, 296, 705
Maximal length, 459, 473, 475, 498, 705
Maximum unambiguous range, 675-676, 693
Maximum usable frequency (MUF), 574, 602-603
Maximum usable range, 653, 676, 705
MCA (Micro Channel Architecture), 445
m-derived filter, 3, 42-43, 705
Mean, 196, 304, 400, 438, 461, 498, 587
Mechanical splices, 705
Memory, 326, 328, 351, 390, 447, 487
Meter movement, 51
Microbending, 705
Microbrowser, 705
Microphone, 61, 92, 94, 204, 207, 209-210, 227, 236, 238, 244-245, 252-253, 255, 335-336, 388, 406
Microprocessor, 50, 98, 283, 311-312, 325, 351, 390
Microstrip, 652-653, 682-684, 689-690, 693, 705
Microwave antennas, 23, 674
Microwave monolithic integrated circuit (MMIC), 705
Microwave tubes, 685
Midrange, 17
Miller codes, 374
Millimeter waves, 705
Minimization, 300
Minimum distance, 349, 375-378, 399-400, 575, 703, 705
Minimum ones density, 405, 419, 705
Mixer, 117, 124, 126-130, 132-140, 142-143, 145, 147, 149-153, 160-161, 173, 184-185, 187-189, 195-196, 232-235, 255, 260-262, 283-284, 288, 292-293, 295, 300-306, 308, 314, 316-317, 319-320, 331-332, 334-335, 338-340, 464-466, 490, 494, 678, 693, 696, 699, 701, 707, 709
Mixer circuit, 126, 151, 173, 332, 334, 339, 464-466, 478
Mixer/LO, 136
Mobile FM transceiver, 336
Mobile identification number (MIN), 492
Modal dispersion, 705
Mode field diameter, 705
Modem, 350, 405-407, 439-440, 442-444, 446, 486, 699, 708, 712-713
Modulated amplifier, 69, 91-92, 94, 705
Modulation, 2-5, 7, 9, 12, 52, 61, 67-114, 115, 117-136, 138-162, 166, 178, 181-182, 201, 203-212, 214-229, 231-256, 259-273, 279-281, 283, 287-296, 317, 332-333, 336, 348, 357, 372-375, 424-429, 431-432, 435, 449, 453-454, 458-462, 469-472, 481-484, 487, 497-499, 596, 695-696, 698-708, 712
amplitude, 5, 67-114, 115, 117-136, 138-162, 166, 181-182, 204, 206-212, 215-216, 218-221, 224, 227-228, 232, 234, 236, 243, 245-246, 252-254, 256, 263-266, 268, 317, 333, 357, 405, 426-429, 431-432, 435, 449, 459-460, 469, 710, 712
balanced, 7, 126, 147, 178, 181, 201, 234-235, 240-241, 248, 256, 405, 696, 698, 704
Modulation error ratio (MER), 705
Modulation factor, 69, 76, 705
Modulation index, 69, 75-76, 79-82, 108, 110-111, 156-157, 160, 204-205, 214, 216-218, 251-255, 292, 705
Modulator, 74, 77, 83, 85-92, 94, 97, 102, 107, 111-112, 126, 146, 148, 164-165, 169-170, 172, 177-178, 180-181, 186, 191-194, 199-201, 205, 216, 224, 227-228, 232-236, 240-241, 245-248, 252, 255-256, 333, 336, 407, 424-425, 428, 435, 449, 454, 469-470, 677-678, 696-698, 709, 712
Modulus, 320-321
Molniya, 582
Monochrome, 698, 705
Monopole, 608-609, 622-625, 645-649, 670, 698, 703, 705
Morse code, 4, 207, 432-433
Multimeter, 52, 55, 341
Multimode fibers, 705
Multiple access (MA), 477
Multiple time around echoes, 675
Multiplex operation, 205, 239, 705
Multiplexer, 422
Multiplexer (mux), 422
Multiplexing techniques, 487, 585, 602
Multiplication, 232-234, 236, 319
Multiplier, 197-198, 232, 238, 244, 255-256, 335, 337-339, 494-496
Multiplier circuits, 335
Multipoint circuits, 405, 413
Multisim, 2, 58-60, 107-109, 126, 156-158, 197, 250, 292, 338-341, 395-396, 450-453, 460, 474, 478-480, 494-495, 497, 550, 552, 600-601, 642-645
resonance, 600
Multitone modulation, 459, 483, 705
Music, 74, 146, 166, 184, 186, 207, 247, 713
Muting, 299, 310-311, 705
mutual inductance, 45

## N

Narrowband FM, 205, 217-218, 222, 243, 254, 307, 706
Narrowband FSK, 461-462
Natural, 4, 41, 45, 48, 224, 264, 349, 357-358, 399, 657, 683, 706
Natural logarithm, 683
Natural sampling, 349, 357-358, 399, 706
Near field, 609, 612, 641, 706
Negative feedback, 232, 260, 271, 696, 706-707
Negative resistance, 709
Network analyzer, 550-553, 642-643, 686-689
Network interface card (NIC), 706
Neutralization, 85-86, 97, 706
Neutralizing capacitor, 69, 86, 136, 706
Nitrogen, 509, 663
Noise contours, 20
Noise diode generator, 25, 63
Noise factor, 261, 593, 604
Noise figure (NF), 18, 62
Noise floor, 69, 99, 113, 117-118, 311, 313, 706
Noise immunity, 260, 410, 453
Noise limiter, 308-309, 343, 706
Noise measurement, 2, 25-26, 63, 705
Noise power, 12, 14-15, 18, 23-25, 62-63, 312-313, 710
Noise ratio, 2-3, 18, 21, 23, 25, 61-63, 222-224, 252, 311, 313, 315, 348, 364-365, 411, 414, 426, 443, 710
Noise suppression, 204, 220, 223-224, 252
Noise temperature, 23, 63, 66, 593, 604, 701
Noise voltage, 14-16, 21, 23, 27, 62, 66, 264
Noninverting input, 430
Nonlinear coding, 349, 365, 706
Nonlinear device, 69, 71, 74, 83-85, 121-122, 126, 128, 138, 159, 162, 168, 184
Nonlinear mixing, 71
Nonlinearity, 45, 83, 86, 122, 136, 169, 194-195, 450, 471
Nonrecursive, 349, 390, 400, 706
Nonsinusoidal waveforms, 61
Nonuniform coding, 349, 365, 706

Normalizing, 503, 536, 552, 706
NPN transistor, 138
NRZ group, 372-373
NRZ-L, 372-373, 399, 412, 415, 454
NRZ-M, 372-373
NRZ-S, 372-373
Null, 191, 216, 245, 353-354, 405, 442-443, 599, 632, 706
Null modem, 405, 442-443
Numerical aperture, 706
Numerically controlled oscillator (NCO), 328
Nyquist rate, 349, 358, 426

## O

OC-1, 706
Octave, 3, 19, 188, 391, 706
Odd parity, 379-380
Offset voltage, 27, 88, 90, 251, 490
Ohmic region, 233
Ohmmeter, 57, 154, 191, 201, 549, 637, 640
ohms, 190, 237, 261, 537, 617-618, 687-688
Omnidirectional, 609, 614, 624, 629, 706
Op-amp, 155
  specs, 155
Open circuit, 43, 46, 57, 113, 305, 323, 332, 523-530, 553, 556, 611, 656
Open diode, 155
Open input, 151
Open systems interconnection, 706
Open-circuit, 543
Open-loop response, 90-91
Operational amplifier, 393, 450, 490, 494
Operational transconductance amplifier (OTA), 88
Optical spectrum, 706
Optimum working frequency, 561, 574-575, 603, 706
OR gate, 269-270, 429
Orbit, 561, 578-582, 584, 587-588, 591, 695, 698, 701-702, 707, 711
Orthogonal frequency division multiplexing (OFDM), 458-460, 483, 706
Oscillation, 45, 47, 56, 66, 86, 105, 112, 129, 136, 138, 331, 698, 706
Oscillator, 3, 44-52, 55-57, 61, 65-66, 85, 90-95, 99, 102, 105-107, 124, 127-129, 132-138, 143, 147-149, 151, 153, 160-162, 177-178, 182, 184-188, 191-192, 195-196, 207-210, 227-228, 231-236, 238-241, 243-247, 249-250, 252-253, 255, 259-262, 279, 281-284, 290, 294-295, 300-303, 308, 317-319, 323, 328, 332-338, 428, 447, 449, 461-462, 464, 469, 496, 544, 601-602, 678, 693, 696, 701-704, 706-707, 709, 711
  Armstrong, 205, 233-235, 252, 255, 696
  Clapp, 47-48, 56, 61, 65-66, 698
  Colpitts, 47, 49, 61, 65, 138, 246, 698
  feedback, 45, 56, 66, 91, 138, 151, 228, 232, 236, 245-246, 260, 271, 318, 702-703, 706-707
  free-running, 236, 259, 271-272, 283, 702, 711
  Hartley, 3, 45-47, 61, 65, 239, 283, 703
  IC crystal, 50
  phase shift, 45, 462, 464, 696, 707
  phase-shift, 462
  Pierce, 49, 51, 65, 601-602
  sinusoidal, 44-45, 91, 178, 185, 208, 228, 698, 702-703
  Wien-bridge, 90-91
  Wien-bridge oscillator, 90-91
Oscillator operation, 153
Oscilloscope, 26, 31, 33, 51-52, 54-59, 63, 73-74, 77, 95, 97-98, 101-104, 107-108, 111, 113-114, 153-154, 156-158, 191-192, 197-198, 238, 251, 293, 338-341, 396-398, 470-471, 490, 494, 496-497, 527, 545-546, 698, 701, 711-712
  analog, 340-341, 396, 490, 494, 712
  digital, 31, 51-52, 55, 57, 396-398, 447, 449-450, 470-471, 490, 494, 496-497, 698, 701, 712
oscilloscopes, 3, 31, 68, 290
  input capacitance, 697
OTA, 88-89, 459, 493, 706
Out-of-band, 706
Output, 6-7, 11-14, 16, 18, 21-26, 38-40, 44-48, 50-54, 56, 61-63, 65-66, 71, 74, 79-95, 97-99, 101-107, 110, 112-114, 118-119, 121-126, 128-129, 133-143, 149-152, 154-155, 157-161, 169, 174-178, 180-188, 191-192, 194-199, 201-202, 207-210, 221-225, 228, 232-236, 238-241, 243-256, 260-272, 279, 281-283, 292-293, 296, 301-303, 305, 307-311, 313-314, 318-326, 328-341, 343-344, 356-358, 360, 363, 367-371, 375, 380, 382-384, 388-392, 396, 399-400, 422-425, 429-430, 432-433, 435, 444-445, 447, 449-451, 453, 461-468, 472-474, 478-482, 487-488, 492, 494-498, 525-526, 532, 556-557, 562, 586, 669-670, 677, 695-702, 706-711
Output impedance, 25, 94-95, 106, 357, 695
  determining, 106
Output power, 24-26, 53, 61, 82, 85, 102, 106-107, 112, 161, 167, 182-183, 296, 335-337, 410, 494
Overflow, 442
Overmodulation, 69, 77-78, 80, 95, 97, 111-112, 706
Overshoot, 462
Overtone, 237

## P

Package, 29, 36, 50, 133, 271, 300, 319, 711
Packet switching, 404-405, 416, 420-421, 453-454, 702, 706
Packets, 405, 420-421, 702, 706, 710
Padder capacitor, 117, 130, 706
Page, 29, 446, 494
Paging procedure, 706
Parabolic, 566, 578, 613, 638, 646, 706
Parallel circuit, 225
  capacitive, 225
Parametric amplifier, 706
Parasitic array, 609, 627, 648, 707
Parasitic oscillations, 69, 86, 112, 707
Parasitics, 330-331, 344
Parity, 348-349, 351, 379-381, 387, 398, 400, 704, 707, 711
Pass transistor, 154-155
Passband, 39, 172, 175, 178, 182, 188, 193-194, 313, 391
Passive attack, 707
passive filters, 388
Passive RFID tag, 693
Patch antenna, 707
Payload, 405, 421, 578, 707
peak amplitude, 63, 72, 76, 78, 112, 447, 449, 490
Peak envelope power, 165, 167, 707
peak value, 5, 73, 75-77, 211
peak-to-peak value, 77
Peak-to-valley ratio, 165, 175
Percentage modulation, 68-69, 76-77, 80, 84, 96, 108, 113, 254, 706-707
Perigee, 561, 580-581, 591, 604, 707
Period, 17, 53, 103, 108, 124, 208, 312, 336, 357, 393, 415, 426, 432-433, 478, 520, 543, 556, 576, 604, 699, 701, 713
Periodic, 29-30, 186, 393, 427-428, 608, 630-631, 638, 645, 648-649, 704
Permeability, 565, 603, 673
Permittivity, 565
Persistence, 26, 471, 707
Phase, 5, 45, 70, 72-73, 76, 86, 95-97, 102, 146, 148, 164, 168, 172-174, 176, 178, 180-182, 199, 201, 204-207, 211, 233-236, 240-241, 252-254, 256, 258-260, 267-272, 274, 281-283, 289, 299, 318, 320, 323, 328-330, 336, 338, 344, 372, 374, 398-399, 459-460, 462-471, 477-478, 494-497, 521, 525-529, 544, 546, 566, 627-631, 659-661, 664-666, 669, 691, 695-698, 707-708
Phase angle, 5, 168, 206, 220, 234, 695, 707
Phase comparator, 259, 271-272, 318, 320, 338, 701, 707
Phase detector, 235-236, 238, 259, 271, 429, 466, 707
Phase inversion, 696
Phase modulation (PM), 5, 206, 211, 220, 233
Phase noise, 299, 328-330, 700, 707
phase relations, 267
Phase relationship, 97, 444, 495
Phase shift, 45, 72, 86, 176, 181, 201, 211, 220-222, 254, 269-270, 429, 459, 462-464, 466, 468, 478, 494, 627, 696, 707
Phase shift keying (PSK), 462
Phased array, 609, 630, 635, 648, 707
Phase-locked loop, 252, 258-259, 269, 271-272, 295, 429, 462
Phase-locked loop (PLL), 252, 269, 271, 295, 429, 462
Phasing capacitor, 165, 173-174, 707
phasor diagrams, 111
phasors, 75-76, 252
Physical length, 521, 533-534, 610, 618, 623, 638, 647-648, 701
Piconet, 707
Pierce oscillator, 49, 51, 65
Piezoelectric effect, 174, 697, 707
Pilot carrier, 165, 167, 182, 184, 186, 241, 247-248, 279-281, 287, 696, 707
Pilot subcarrier, 240
PIN diode, 87-88, 112, 332
Pink noise, 17
Pins, 49, 138, 148, 283, 307, 372, 437, 439-444
Pixel, 707
Pixelate, 707
PLL, 146, 149, 182, 204, 235-237, 252, 255, 269, 271-273, 280-281, 283, 292-296, 317-318, 321, 325, 327, 462, 496, 697, 701-704, 711
PLL capture and lock, 271
PLL FM demodulator, 272, 292-293
PLL LM565, 272-273
Plumbing, 655, 664
PN codes, 473
PN sequence generator, 473-478, 482, 498
PN sequence length, 459, 473, 475, 498, 707
Point of presence, 405, 417, 454, 707
Polar orbit, 581-582, 707
Polar pattern, 707
Polarization, 561-563, 566, 578, 602, 608-610, 624, 646-647, 663-664, 701, 707
Polarization diversity, 578
Pole, 65, 190, 322, 581
Poles, 3, 42, 636, 707
Port, 284, 331-334, 436, 445, 550
Positive feedback, 45, 66, 138, 698, 703, 706
potential difference, 14, 441, 562
potential energy, 44
potentiometers, 146, 188
Power, 7-8, 10, 12-15, 18, 21-26, 44-46, 50, 53-55, 61-63, 65, 68, 79-85, 88, 91-92, 94-95, 97-98, 100, 102-107, 112-114, 118, 123-124, 127, 143, 148-151, 153-156, 158-159, 161, 165-168, 177-178, 181-184, 188, 199, 201-202, 214-215, 218-219, 223, 232-233, 235-236, 238, 241, 243-244, 254, 256, 260-261, 263, 282-284, 287, 296, 308, 310-314, 319-320, 331-337, 342, 409-411, 426, 430-432, 443, 447, 453, 470-471, 493-494, 503-504, 508, 515, 527, 531-533, 549, 555-557, 564-565, 577-579, 590, 595-598, 601-603, 612, 614-617, 620, 630-631, 635-639, 645-647, 649, 652-655, 676-681, 684-686, 690-693, 695-696, 699, 704-705, 707-710
  apparent, 13, 260
  control circuits, 123
  instantaneous, 14-15, 79, 104, 630, 695
  maximum power transfer, 7, 15, 94
  ratio, 7, 18, 21, 23, 25-26, 61-63, 82, 95, 149-150, 165, 182, 254, 296, 311, 313, 319-320, 410-411, 414, 426, 443, 447, 508, 531, 556, 615-616, 628, 631, 649, 669, 676-677, 696, 699, 701-702, 705, 707-710
  reactive, 21, 94, 331, 625
  true, 21, 24, 88, 97, 153, 336, 432, 443, 625, 631, 677
  utility, 127
Power amplifier, 54-55, 92, 94, 113, 148, 178, 182-184, 199, 201, 235, 238, 260, 317, 336, 557
Power amplifiers, 12, 127, 167, 232-233, 241, 243, 283, 317, 470, 578-579
Power density, 564-565, 579, 603
Power gain, 7, 21-22, 61-62, 149, 159, 628, 646
Power rating, 167, 685
power supplies, 167, 300
Power supply, 13, 45-46, 53, 104-105, 107, 151, 154-156, 158, 161, 196, 263, 282, 284, 287, 331, 333-334, 447, 601
Power transistor, 94, 183
Power-sum NEXT (PSNEXT), 508
Practical applications, 210
Practical inductors and capacitors, 35
Preamplifier, 147, 178, 281, 283, 315-316
Precession, 707
Precision, 138, 247, 585
Preemphasis, 204-205, 224-226, 232, 234-235, 241, 248, 254-255, 699-700, 707

Preferred roaming list (PRL), 459, 493, 707
Preselector, 299, 304, 343, 707
Preset, 496
Primary winding, 93
Printed circuit board, 43, 95, 102, 104, 153, 330-331, 344, 682
Probe, 152-153, 156, 192, 196, 447, 449, 488, 670-671
Procedure, 25, 63, 95, 113, 130, 160-161, 196, 201, 256, 287, 366, 382-383, 413, 618, 693, 698, 703-704
Product, 28, 72, 79, 117, 124, 126, 186, 188, 201, 316, 327, 338-339, 472, 555, 703
Product detector, 117, 124, 186, 188, 201, 703, 707
Program, 222, 318-319, 323, 351, 353, 492, 583, 587, 595-596, 600
Programmable division, 318, 321
Programmable logic, 319
Programming, 98, 280, 323, 351, 700
Protocol analyzer, 445
Protocols, 404-405, 412-413, 419, 421, 707
Pseudorandom, 472, 475, 477-478, 487, 702, 708
Pulse, 12, 29, 124-125, 176, 207, 308-309, 318, 320, 348, 355-358, 372-373, 393-396, 398, 404-405, 419, 426-429, 431-432, 451, 453-454, 487, 490, 492, 499, 545-546, 557, 653, 670, 674-678, 692, 698, 700, 705-709
Pulse Amplitude Modulation (PAM), 207
Pulse dispersion, 708
Pulse modulation, 124, 404-405, 424, 426-427, 432, 453-454, 487, 499, 708
Pulse repetition frequency, 653, 674, 677, 708
Pulse repetition frequency (PRF), 653, 674, 708
pulse repetition rate, 653, 674, 692, 708
Pulse repetition time (PRT), 653, 674-675, 708
Pulse waveform, 393-395
Pulse width, 207, 393, 415, 427, 431, 492, 674-677, 692, 700, 708
Pulse width modulation, 207
Pulse-amplitude modulation (PAM), 357, 427
Pulse-code modulation, 12, 348, 355, 398
Pulse-duration modulation (PDM), 428
Pulse-length modulation (PLM), 428
Pulse-position modulation (PPM), 427, 431
Pulse-time modulation (PTM), 428
Pulse-width modulation, 405, 427-428, 708
Pulse-width modulation (PWM), 427-428
Pump chain, 205, 235, 708
Push-pull, 94, 143, 183, 199, 647
Push-pull amplifier, 430

## Q

Q, 35-36, 39-42, 48-49, 56-57, 63, 65, 101, 103-105, 114, 119-121, 123, 135, 153, 159, 172-175, 178, 180, 190, 199-200, 231, 244-246, 289, 296, 303-304, 310, 321, 343, 352-354, 362-363, 368, 395, 425, 429, 433, 465-467, 469-470, 474-475, 517-518, 600, 698-699, 707, 709, 711, 713
QPSK constellation, 465, 467
Quadrant, 467
Quadrature, 148, 161, 259, 264, 269-270, 281, 287, 289, 294-296, 463, 497, 708
Quadrature detector, 264, 269-270, 287, 289, 294, 296, 708
Quality, 3, 34-36, 38-40, 48, 56, 62-63, 65, 88, 90-91, 99, 146, 149, 176, 178, 186, 228, 261, 264, 298, 340, 342, 357, 367, 421, 441, 449, 485, 493-494, 498, 543, 592, 594, 598
Quality factor (Q), 65
  coil, 65
Quantile interval, 349, 359, 362-363, 365-366, 706, 708, 712
Quantization, 348-349, 359-360, 362-366, 399, 401, 704, 708, 712
  error, 348-349, 359-360, 365, 401, 704, 708, 712
  noise, 348-349, 360, 363-366, 704, 712
Quantization error, 360, 365, 401
Quantum, 708
Quarter-wave filter, 545
Quarter-wave matching, 621-622, 645
Quarter-wavelength transformer, 533
Quartz, 48, 112, 200, 289
Quiet zone, 561, 575, 708, 710
Quieting, 259, 264-265, 287, 295, 310, 704, 711
Quieting voltage, 259, 264-265, 295, 704, 708, 711
Quotient, 381, 385-386

## R

Radar, 4, 173, 207, 477, 635, 651-693, 701, 708-709, 711
Radar block diagram, 677, 692
Radar mile, 653, 674-675, 708
Radar pulses, 674-675, 708
Radar range, 690
Radar system parameters, 675
Radian, 72, 221
Radiation field, 609, 612, 641, 645, 708
radiation losses, 509, 682
Radiation pattern, 579, 608-609, 614, 616, 624, 627-632, 635, 645-646, 696, 708
Radiation resistance, 608-609, 616-618, 642, 645-647, 649, 708
Radio emission classifications, 206
Radio frequency identification (RFID), 679
Radio frequency interference (RFI), 434, 598
Radio horizon, 560-561, 569, 605, 708
Radio telemetry, 459-460, 487, 489-490, 497, 708
Radio-frequency spectrum, 5
Radome, 653, 708
Ramp, 328, 370-371, 490
Ranging, 477, 594, 674, 708
Raster, 708
Rate of change, 424
Ratio detector, 266, 268-269, 294-295, 708
Rayleigh fading, 708
RC circuit, 42, 234, 269
RC filter, 140, 269, 340
Reactance modulator, 205, 228, 232-233, 243, 245-247, 252, 255-256, 709
Reactance noise effects, 21
Reactive load, 530, 625
Read, 98, 106, 284, 441, 537, 541, 550, 640, 680-682
Real time, 420, 422
Receiver, 2, 4, 6, 11-14, 23-25, 28, 38, 61-63, 65, 77, 98, 105-106, 116-120, 122, 127-130, 132-135, 138, 140, 142-143, 148-151, 154, 156, 159-162, 167-168, 181-182, 184, 186-189, 191, 195, 199, 220-224, 233, 238-239, 241, 244-245, 254-256, 260-266, 273, 279-280, 283, 287-290, 292-296, 300-302, 304-305, 307-317, 330, 336-338, 342-345, 350-351, 379-382, 412-413, 421, 423, 425-428, 434-437, 446-449, 454, 477-478, 480-481, 486-488, 490-492, 497, 549, 567, 569-571, 583-586, 596-599, 603, 605, 636-637, 641, 653-655, 693, 695-704, 706-713
Receiver noise, 262, 287, 298, 312-313, 706
Receiver sensitivity, 117, 298, 312-313
Receiver time, 426, 653, 674-675, 709
Reciprocity, 608-610, 645-646, 709
Recombination, 572
Rectangular waveguide, 655-656, 658-659, 661-662, 670, 672-673, 684, 690-691, 693
Rectifier, 104, 107, 154-155, 189, 340
  half-wave, 155
Rectifiers, 155
Recursive filter, 390, 701
Red alarm, 417
Redundancy, 348-349, 379-381, 387, 398, 704
Reflected wave, 527-531, 539, 546, 566-571, 599, 603, 616, 623
Reflection, 477, 502-503, 508, 524-528, 530-533, 539, 543, 545-547, 556, 565-567, 569, 599, 602-603, 605, 616, 623, 659, 668, 679, 701, 709
Reflector, 578-579, 590, 592, 604, 609, 613, 627-628, 646, 648, 709, 713
Refraction, 560, 566-567, 571-574, 602-603, 698, 701-703, 709
Refraction of light, 566
Refractive index, 567, 705, 709-710
Regeneration, 349, 351, 709
Register, 370-371, 381, 384-386, 474, 476-478, 498
Regulation, 98
Regulator, 53, 137, 155, 237, 282, 326
Rejection notch, 165, 174, 709
Relative harmonic distortion, 69, 99-100, 113, 709
Relay, 183-184, 189, 300, 336-337, 404-405, 416, 421, 434, 453-454, 696, 702
Remainder, 381, 383-386
Replacement energy, 709
Reset, 283, 370, 386, 450-451, 490
Resistance, 14-16, 19-20, 24, 36, 39-44, 52, 55-56, 62-63, 65-66, 88, 102-103, 122, 124, 154, 167, 176, 233-234, 247, 312, 356-357, 394-395, 431, 450, 488, 511-512, 515-516, 521-522, 526, 530-533, 535-537, 539, 547-549, 551, 556, 600, 608-609, 616-619, 623, 633, 640-642, 645-647, 649, 668-669, 687, 701, 708-709
  voltage-controlled, 233
Resistive load, 58, 101, 516, 521, 533, 557, 700, 706
Resistor, 2-3, 14-16, 21, 36, 43, 51, 62, 66, 71, 90-91, 104, 122, 124, 126, 152-153, 233, 245-246, 256, 263, 272-273, 289, 293, 330, 337, 368-369, 388, 449, 521-522, 550-551, 667, 705, 709
  chip, 330
  film, 15
Resolution, 12, 98-99, 344, 359, 361-363, 365, 368, 370, 399, 401, 552-553, 703, 709, 712
  ADC, 368, 370
Resonance, 3, 36-39, 41, 63, 65, 93, 174, 284, 543, 553, 600, 666, 709
Resonant circuit, 48, 83, 101, 173, 600, 620
Resonant feed line, 619
Resonant frequency, 36-38, 41, 45-48, 51, 56, 95, 160, 176, 245-246, 553, 601, 639-640, 642, 645, 647-648, 673, 701-702
Resonant line, 503, 521-522, 555-556, 620, 709
Response curve, 40, 42, 133, 175, 265
Rest time, 653, 674, 676, 692, 709
Retrace interval, 709, 712
Return loss, 503, 508, 709
Reverse bias, 84, 86, 131-132, 160, 227-228, 291, 305
Reverse voltage, 132-133
RF choke, 190, 322, 331, 344, 601
RF chokes, 246, 331, 434
RF inductors, 132
RF shield box, 459, 493, 709
RFID inlays, 680
RFID (radio frequency identification), 679
  basic block diagram, 679
  transceiver, 679
  transponder, 679
RFID system, 679-680, 693
Rho, 494, 709
Rigid waveguide, 685
Ring, 165, 169, 199-200, 441, 443, 696, 704, 709, 711
Ring modulator, 165, 169, 199-200, 696, 704, 709
Ringing, 394-395, 443, 697
Ripple amplitude, 165, 175, 200, 709
rise time, 393-394, 434
RJ-45, 505-506, 709
RL circuit, 330
RLC circuit, 36-37, 43, 330, 553
RMS, 14-16, 18, 26-27, 31, 62, 100, 112, 143, 161, 186, 200, 479, 527, 616
RMS value, 14-15, 616
Roll-off, 3, 42, 173, 709-710
Rotor, 129
Router, 418
RS-232, 405, 436, 438-444, 455, 493, 709
RS-232 line descriptions, 440
RS-485, 405, 444-445, 709
RZ-AMI, 373-375

## S

Safety, 635
Sample, 31-34, 57-58, 63-64, 113, 352, 355-359, 362-363, 365, 390-392, 395-399, 401, 416, 424, 426, 450, 490, 644-645, 686-689, 695, 700-701
Sample frequency, 31, 57-58, 63, 358-359, 390, 395-397, 399, 401
Sample-and-hold, 355-357, 396-399, 450, 490
Sample-and-hold circuit, 355-357, 396-399
Sampling, 31, 52, 57-58, 348-349, 357-360, 362, 364, 391, 395-399, 401, 426-428, 432, 695, 701, 706, 708
Sampling circuit, 358
Satellite link budget, 561, 592, 594-596, 604-605, 709
Satellite radio, 460, 561, 590-591
Saturation, 45, 430
Sawtooth, 430, 450
Sawtooth waveform, 430, 450
SCA decoder, 280
SCA PLL decoder, 281
Scattering, 577-578
Schematic, 55, 65, 112-113, 143, 157, 160, 195, 200-201, 227, 236-238, 244, 255, 258, 294-296, 343, 424, 557, 647

Schmitt trigger, 282-283, 431-432
Schottky diode, 117, 138, 709
Schottky diodes, 138
SCSI, 445
Second return echoes, 653, 675-676, 705, 709
Sector, 92-93
Sectoral horn, 709
Segment, 484-485, 519, 611
Segment sync, 709
Selectivity, 65, 116-120, 123, 127-128, 133, 135, 138, 143, 159, 161-162, 175, 220, 302-303, 307-308, 343, 586, 654, 709, 711-712
Self-bias, 103
Self-clocking, 374, 399, 412
Self-excited mixer, 117, 138, 152, 161, 696, 709
Self-synchronizing, 372, 374
Semiconductor, 12, 17, 19-20, 25, 92-93, 96, 138, 146, 184, 262, 274, 287, 292, 325, 356, 684, 709
Sensitivity, 26-27, 90, 116-118, 124, 135, 151, 159, 161-162, 259, 261-262, 264-265, 287, 295-296, 298, 307, 312-316, 342-343, 345, 492, 494, 571, 676, 700, 709, 711
Sensor, 355, 492, 579
Sequence control, 405, 413, 709
Sequence detector, 450-451
Serial data, 385, 415, 422-423, 438, 444, 450-451, 474, 709
Series resistance, 36, 63
series resonant circuits, 176
Series tee, 664-665, 691
Series-aiding, 154
Set, 27, 31, 33, 57, 88, 90-91, 106-108, 110, 128, 138, 140, 143, 156-157, 192-193, 195-196, 201, 212, 218, 236, 245, 263-264, 272-273, 292-293, 305, 309, 337-338, 341, 351, 353, 396, 398, 408, 443-445, 451, 460, 481-482, 486, 496, 535, 551-552, 642, 662, 670, 695, 698-699, 712-713
Shadow mask, 709
Shadow zone, 561, 567-568, 603, 709
Shape factor, 165, 175, 200, 709
Shielded pair, 508, 510, 553, 620
Shift register, 384-386, 474, 476-477
Shock, 56
short circuits, 46, 539, 672, 700
Short-circuit, 640
Shot noise, 3, 16-17, 709
Shunt tee, 664
Sideband splatter, 69, 77, 709
Signal, 2-7, 11-14, 16-18, 24-28, 31, 33-34, 44-46, 50, 52-58, 61-63, 66, 70-78, 81-82, 84-88, 90-99, 101-103, 105, 107-108, 110-114, 117-119, 121, 123-124, 126, 128-129, 138, 140-143, 146, 149-153, 156-158, 160-162, 166-169, 172-173, 176-178, 186-188, 191-197, 199-202, 204, 206, 208-211, 214-216, 218-228, 232-236, 238-241, 243-248, 250-256, 260-272, 279-281, 283, 287-290, 292-293, 295-296, 300-306, 308-314, 316-317, 325, 330, 332-338, 340-341, 343, 348-351, 355-359, 362-368, 372-373, 388, 393-399, 401, 408, 417, 424-432, 434-436, 439-441, 443-447, 449-450, 453-454, 476-478, 480-488, 492, 494-498, 504-505, 508, 510, 517, 519, 521, 545-549, 554-555, 569-571, 574-579, 585-588, 591-601, 604, 615, 629-630, 632, 636, 646, 653-656, 666, 668, 670, 674-681, 691, 695-713
  periodic, 186, 393, 427-428, 649, 704
Signal generator, 54-56, 101-102, 152, 192, 194, 196, 287-289, 686
Signal injection, 54, 66, 102, 117, 156, 191, 196, 202, 287, 710
Signal tracing, 54-55, 102, 202
Signaling systems, 477, 710
Signal-to-noise ratio, 2-3, 18, 61, 63, 222-224, 252, 313, 348, 364-365, 414, 426, 710
Signature sequence, 459, 477, 498, 710
Silicon, 4, 123, 131, 133, 160, 169, 189, 291, 322, 684
silver, 189, 492, 663
Simulation, 58, 108, 157-158, 197-199, 251, 292-293, 340-342, 396, 398, 451-452, 494, 497, 543, 550-552, 600-601, 645, 686-689
SINAD, 24-25, 62
Sine wave, 5, 31, 44, 56, 63, 75-76, 79, 82, 86, 108, 112, 114, 124, 126, 128, 166-167, 184, 186, 188, 195, 201, 211, 255, 264, 340-341, 391, 396-397, 494, 496
Single stub tuner, 642-645
Single-chip FM transmitter, 238-239
Single-ended, 444
Single-mode fiber, 705
Sirius, 590-591
skin effect, 503, 515, 663, 710
Skip zone, 560-561, 575, 602, 604-605, 710
Skipping, 561, 571, 602, 604, 710
Sky-wave propagation, 560, 568, 571, 576-577, 600, 602-603
Slide-screw tuner, 666
Slip, 492
Slope detector, 258, 265-266, 294-295, 710
Slope modulation, 405, 424, 710
Slope overload, 405, 424, 454, 710
Slot antenna, 634, 649, 710
Slotted aloha, 682, 710
Slotted lines, 545, 554
slug, 138, 190, 666-667
Small-signal amplifier, 316
Smith chart, 502-503, 534-543, 550-554, 556, 642, 660, 691, 693, 710
Software, 29, 43, 98, 284, 351, 443, 460
software packages, 43, 98
Solar noise, 3, 13, 710
Soldering, 53, 102
Source, 13, 15-17, 19-20, 25, 28, 99, 108, 110, 136, 143, 156-157, 180, 188, 200, 213, 233-234, 251-252, 262, 272, 292, 356, 366, 420-422, 449, 490, 521-527, 539, 560-565, 567, 598, 602-603, 611-612, 614, 649, 678-679, 685, 695-696, 703-704, 711-712
Source resistance, 16, 19-20, 233-234, 524, 526
Space, 3-4, 13, 23, 70, 173, 178, 352, 354-355, 360, 372-374, 379, 405, 433-434, 454, 461, 509, 520-521, 555, 560-561, 568-569, 571-574, 577-578, 593-595, 602-604, 615-618, 632, 638, 642-643, 646, 660-662, 667, 674, 691, 696, 702-706, 708-710
Space diversity, 578
Space noise, 3, 13, 698, 710
Space wave propagation, 708
Speaker, 6, 11, 16, 54, 118, 128, 140, 142, 150, 152, 154, 186, 195-196, 220, 262-263, 279-280, 286, 288, 308
Spectrum, 5, 13-14, 28, 31, 52, 58, 60, 63, 68-69, 74, 97-101, 105-106, 113-114, 118, 168, 173, 191, 193-194, 197-198, 244-245, 247-248, 251-252, 313, 316-317, 329, 333, 340, 342, 396-398, 414, 436, 445, 449, 458-460, 471-479, 481-483, 485-487, 497-499, 590-591, 672, 700-703, 713
Spectrum analyzer, 52, 58, 60, 63, 69, 97-101, 105-106, 113-114, 118, 191, 193-194, 197-198, 216, 244-245, 247-248, 251-252, 313, 316, 333, 340, 396, 436, 449, 472, 706
spectrum analyzers, 31, 68, 97-98, 101, 194, 317, 445
Spoked wheel, 626
Spread, 13-14, 329, 342, 458-460, 471-479, 481-482, 487, 497-499, 622, 698, 700-703
Spread spectrum, 459, 471-472, 475-478, 497-498, 700-702, 710
Spurious frequencies, 69, 98, 710
Spurs, 69, 98-99, 113, 710
Square law, 122
Square wave, 29, 31, 33-34, 58-60, 63, 112, 228, 251, 393-395, 415, 494
Square-wave generator, 58
Squelch, 182, 310-312, 340-343, 705, 710
Squelch circuit, 310, 340-343
Squelch techniques, 311
SSB (single-sideband), 197
  filter, 197
Stability, 44, 47-51, 65, 92, 184, 216, 231-232, 236, 249, 255, 260, 263, 388, 696, 707
Stabilization, 232-233, 284
Stack, 486, 629
Stage, 6, 13-14, 21-22, 54-55, 62, 66, 84, 87, 92-94, 97-98, 102-104, 107, 113, 116, 118, 124, 126-129, 138, 142-143, 150-153, 156, 160, 162, 167, 169, 184, 188, 191, 196-197, 201, 219-220, 233, 238, 244-245, 254-256, 260-261, 263-264, 280-281, 283, 304, 335-338, 340-341, 494, 496, 557, 593, 693, 695-696, 700-702, 704-705, 707, 709
Stagger tuning, 710
Standing wave, 502-503, 527, 530-531, 534, 539, 545, 554, 556, 625, 710
Standing wave ratio (SWR), 531, 556
Start bit, 379, 405, 436, 710
Static, 3, 11, 13, 87, 220, 254, 494, 636, 710
Static charge, 636
Static convergence, 710
Statistical concentration, 405, 420, 454, 710
Step, 31-32, 87, 102, 134, 196, 210, 227-228, 234, 261, 272, 280, 295, 305-306, 315, 354-355, 359-360, 365-366, 368, 375, 390, 427, 451, 546, 557, 598, 698, 706, 708
Stereo demodulation, 258, 279
Stereo FM, 204, 239-241, 255, 280, 294, 711
Stereo receiver, 146, 148, 239, 279-280, 342
Stereo signal processing, 280
Stop bit, 379, 405, 436, 710
Storage, 445, 488, 587
Stray capacitance, 3, 43, 330, 710
stray capacitances, 130
String, 381, 387, 419, 490, 638
Stripline, 642-644, 652-653, 682-683, 690, 693, 711
Stub tuner, 503, 539, 541, 543, 642-645, 667, 700, 710
Subsatellite point, 579, 587
Subsidiary Communication Authorization (SCA), 280, 294
Substrate, 124, 136, 680, 707
Successive approximation, 370
Sum, 58, 71-72, 74, 76, 86, 112, 121-122, 126, 128, 136, 166, 169, 177, 197, 239, 256, 267-268, 280, 292, 334, 338, 397, 462, 503, 527, 592-593, 707, 712
Superheterodyne, 116, 119-120, 127-130, 133-135, 138, 143, 146, 156, 159-162, 175, 187-188, 206, 287, 294-295, 304, 677, 700-701, 703-704, 706-707, 709, 711
Superheterodyne receivers, 116, 127, 134-135, 138, 156, 206
Superheterodyne tuning, 116, 130
Superposition, 669
Supply voltage, 87, 92, 107, 238, 263, 283, 437
Surface wave, 561, 568, 711
Surface-mount, 43
Surge impedance, 503, 512, 555-556, 711
Susceptance, 36
Switch, 44, 105, 108, 147, 154, 172, 179, 190, 290-291, 309, 322, 330, 336-337, 340-341, 353, 356-357, 369, 382-384, 416, 421, 494, 521-522, 524, 547, 590, 666, 677, 691, 711-712
SWR meter, 635, 640, 649
Symbol substitution, 349, 380, 711
Sync separator, 698, 711
Synchronizing, 372-374, 418-419, 432, 711
Synchronous, 124, 126-127, 159-160, 281, 283, 352-353, 372, 380-381, 405-406, 412-413, 419, 422, 436, 453, 702-703
Synchronous detection, 124, 159
Synchronous orbit, 578, 702, 711
Synchronous system, 405, 436, 711
Synchronous systems, 372
Syndrome, 349, 385-386, 400, 711
Systematic code, 349, 381

## T

T1 framing, 417
T1 to T3, 416
T4, 208, 360, 523
Talker, 186
Tangential method, 3, 26-27, 711
Tank circuit, 3, 41-42, 44-47, 65, 85-87, 130, 138, 146, 207, 227-228, 232, 243, 245-246, 264-266, 268, 395, 462, 543, 633, 692, 711
Tape, 227, 355, 374, 487, 638
Telco, 405, 417-418, 421-422, 711
Telecommunications, 8, 91, 460, 506, 703, 713
Telemetry, 4, 355, 374, 428, 447, 458-460, 487-490, 492, 497, 499, 696, 708, 711
television, 4, 12, 28, 38, 91, 167, 217, 241, 289, 360, 388, 422, 487, 544, 547, 549, 592, 628, 646, 695-698, 700-701, 703, 708-709
Television receivers, 697
Temperature coefficient, 143, 492
Temperature stability, 48
Terminated, 9, 238, 337, 395, 505, 511-512, 521-524, 527, 529-530, 545, 550, 555-557, 620, 697, 706, 709
Test instruments, 549
Testing, 53, 55-57, 62, 101, 153, 156, 191, 193-195, 202, 243, 250, 288, 290-291, 313, 316-317, 342, 418, 493, 502-503, 505, 507-508,

546-547, 549-550, 552-554, 697, 707
diodes and transistors, 290
filters, 193, 342, 554, 697, 707
linear amplifiers, 194
oscillator capacitors, 56
oscillator inductors, 57
SSB receiver system, 195
Thermal noise, 2-3, 14-17, 312-313, 411, 704-705, 709, 711, 713
Thermistor, 488
Thermocouple, 355, 488
Third-order intercept, 298-299, 314-316, 343, 345, 703, 711
Threshold, 143, 205, 223-224, 264, 283, 311, 698, 705, 711
Threshold voltage, 259, 264, 283, 711
Throughput, 454
time constant, 122, 124-125, 140-142, 224, 226
Time delay, 194, 279, 388, 582, 587-588, 604, 699, 704
Time division multiplexing, 582
Time domain, 98, 478, 482, 586, 711
Time-division multiplexing, 405, 426, 711
Time-division multiplexing (TDM), 426
Timer, 677
Tip, 711
Topology, 711
Total Harmonic Distortion (THD), 100, 113, 269, 287
Track, 129-130, 387, 472, 547, 582, 679, 704
Tracking, 13, 130-131, 133, 153, 159-160, 271, 303, 405, 424, 579, 674, 679, 682, 706, 711
Tracking ADC, 405, 424, 711
Trailing edge, 124
Transceiver, 117, 299-300, 317, 321, 323, 335-337, 342-344, 437-438, 625, 679, 711
Transceiver transmitter, 300, 335, 711
Transconductance, 88
Transducer, 3, 6, 91-92, 118, 175-176, 487-488, 490, 561-562, 602, 711
Transfer characteristic, 367
Transformer, 86, 93-94, 104, 138-139, 153-155, 178, 190, 267, 269, 449, 490, 503, 510, 533, 544, 554, 621-622, 645, 702, 708
antenna, 93-94, 104, 153, 178, 490, 533, 544, 621-622, 702, 704, 708
balun, 510, 544
tapped, 267, 510, 544, 554
Transformer coupling, 93
transformers, 53, 101, 153, 160, 172, 175, 183, 490, 554, 636
Transient, 136, 330
Transistor, 4, 16, 18-20, 45, 47, 83-84, 86-87, 92-94, 103, 105, 107, 111-112, 138, 142, 152-155, 160-161, 183, 225, 233, 237, 244-246, 261, 263, 269, 283, 288, 294, 296, 306, 310, 356-357, 432, 696
bipolar junction, 83
unijunction, 430
Transistor noise, 16, 261
Transistor tester, 154
Transition table, 374
Transit-time noise, 3, 17, 19
Transmission line, 250, 330-331, 395, 502-504, 510-512, 515-517, 519, 521-527, 529, 532-537, 539, 543-547, 553-557, 565, 571, 608, 610-612, 619-622, 628, 631, 634-640, 642-644, 646-647, 664, 666-667, 682, 684, 686, 688-690, 696-701, 704-705, 708-713
losses, 395, 504, 510, 515-516, 543-544, 547, 554-555, 557, 610-611, 620-621, 625, 672, 682, 684, 699, 701
Transmitter, 4-6, 9, 11-12, 45, 53, 61, 68, 80-82, 84, 91-98, 101-102, 105-106, 111-114, 128, 177-178, 181-183, 187, 192-194, 201, 204-205, 218, 224, 232-233, 235-239, 243-245, 249-250, 252-256, 260, 317, 323, 335-337, 351, 380, 387-388, 412-413, 425, 427-428, 435-436, 445, 447-449, 461-462, 468-471, 475, 477-478, 480, 487-492, 498, 532-533, 555-557, 569, 571, 573, 575, 586, 590, 599, 615-616, 637-638, 676-680, 684-685, 695-701, 703-713
Transparency, 405, 413, 712
Transphasor, 712
Transponder, 561, 578, 586, 679, 712
Transverse, 561-562, 656, 672, 690, 712
Trap, 38, 678, 692, 712
Trapezoid patterns, 95
Traveling wave tube (TWT), 586, 712
Traveling waves, 503, 521, 555, 663, 712
Trellis encoder, 712
TRF selectivity, 119
Triads, 712
Trigger, 282-283, 431-432, 450, 490, 677
Trigonometric identity, 72, 180, 293, 358
Trimmer, 117, 130-131, 178, 189, 237, 244, 712
Triode, 4
Tripler, 232, 255
Tropospheric scatter, 577-578, 602, 604, 712
Troubleshooting, 2, 52-54, 58, 65, 91, 101-103, 106-107, 113, 138, 151-154, 156, 158, 188, 191-192, 195-197, 199, 201, 243, 246-248, 250, 287, 290, 292, 296, 310, 337-338, 395, 447, 460, 494, 549-550, 649, 710
antenna installation, 597, 635
audio amplifier, 54, 103, 156, 161, 188, 195-196, 287, 310, 335
circuit failures, 52, 65
comparator, 338
digital waveform, 393
FM radio, 65, 243, 287, 597, 642
LANs, 460, 547
mixer circuit, 151, 332
no AM RF signal, 152
plan, 53-54, 65, 101, 191
SSB, 164, 188, 191, 195, 197, 199, 201, 243, 710
transceivers, 243, 335
transmission lines, 502, 547, 549-550, 693
Troubleshooting plan, 54, 65
Trunk, 712
Tunable laser, 712
Tuned circuit, 21, 42, 84, 101, 105, 118-120, 122-123, 128-129, 133-135, 138, 152, 159, 262, 283, 289, 301, 304, 532, 705
Tuned radio frequency, 117-118, 159, 712
Tuner, 287, 486, 503, 539, 541, 543, 642-645, 666-667, 700, 710, 712
Tuning capacitor, 105, 130-131, 143, 162, 283, 290, 449, 706
Tuning ratio, 303
Twin lead, 504, 609, 634, 636, 712
Twin-sideband suppressed carrier, 165, 167, 703, 712
Twist, 505, 664, 691
Two-modulus prescaler, 320-321
Two-tone modulation, 435, 454, 461
Two-wire, 445, 509-511, 514, 553, 555, 557, 611, 620-621, 647, 656, 709, 711
Two-wire open line, 504, 553
Two-wire ribbon type, 504
Two-wire transmission line, 511, 555, 557, 611, 621, 656

## U

UHF multifrequency receiver, 325, 344
Uniform quantization level, 349, 365, 704, 712
U-NII, 712
Unijunction transistor, 430
Units, 18, 98, 105, 118, 159, 209, 248, 412, 433, 674, 706
Unity gain, 181
Unshielded twisted pair, 504-505
Up-conversion, 298-300, 302-303, 342-344, 586, 712
Uplink, 561, 580, 583, 585, 590, 594-597, 605, 700, 712
Upper sideband, 69, 74, 79, 121, 174, 177, 180, 184, 187, 198, 240
USB (universal serial bus), 445

## V

Vacuum tube, 4, 697
Vane attenuator, 668-669
Varactor, 117, 131-133, 160, 227-228, 235, 238-239, 252, 255, 287, 322, 338, 712-713
Varactor diodes, 117, 131, 133, 252, 712
Variable, 44, 47, 85, 88, 94-95, 105, 118, 120, 127-133, 138, 142, 146, 160, 173, 177-178, 180, 188-189, 207, 216, 223, 228, 233-235, 245, 299, 303, 306-308, 342-343, 382, 422, 424-425, 431, 622, 625-626, 667-669, 690, 706
Variable attenuators, 668, 690
Variable bandwidth tuning, 299, 308, 712
Variable gain amplifier, 306-307, 425
Variable reactance, 228
Variable resistance, 88, 234
Variable resistor, 233
Varicap diodes, 117, 131, 712-713
VCO, 228-229, 233, 236, 238, 250-252, 255, 271-273, 281, 284, 295, 318-320, 323, 332-334, 338, 462, 496, 697, 711
Vector, 75-76, 221, 267-268, 385, 463, 465-468, 527, 630
Velocity constant, 503, 520, 712
Velocity factor, 503, 520, 555, 712
Velocity modulation, 704, 712
Velocity of propagation, 502-503, 517-521, 555, 712
Vertical array, 629, 645
Vertical cavity surface emitting lasers (VCSELs), 712
Vertical resolution, 712
Vertical retrace interval, 712
Vestigial-sideband operation, 712
Video amplifiers, 678, 712
Video signal, 28, 699, 711-712
Virtual channel connection (VCC), 405, 422, 713
virtual ground, 444
Virtual path connection (VPC), 405, 422, 713
Virtual path identifier (VPI), 422
Voice, 4-5, 33, 74, 119, 172, 176-177, 181-182, 184, 204, 218, 222, 247, 252, 280, 335, 350, 355, 358-360, 366-367, 371, 408, 428, 434, 453, 493-494, 703-704, 706
voltage, 7-11, 13-16, 21, 23, 27, 29, 31, 35, 38-39, 44-45, 52, 55-56, 61-62, 65-66, 68, 70, 76, 80, 86-88, 90-92, 98, 100, 102-105, 107, 113-114, 131-133, 141-143, 152-155, 161, 167, 180, 182, 201, 205, 209-211, 215, 219, 221, 225-228, 232-233, 238-240, 244-246, 250-252, 263-268, 271-272, 280-281, 289, 292-293, 295-296, 318, 337-338, 355-357, 359-360, 362-363, 366-370, 401, 410, 419-420, 428-430, 437-438, 440, 447, 453, 462, 471, 492, 496, 502-503, 511-512, 515-518, 521-531, 533-534, 545-548, 554, 556-557, 565, 615, 629-630, 677-678, 695-696, 699-702, 707-713
applied, 62, 66, 88, 91, 121, 124, 152, 215, 226-228, 238-240, 245-246, 267, 271-272, 280-281, 283, 287, 333-334, 337, 428, 430, 462, 488, 511-512, 515-517, 521-527, 529, 556-557, 611, 630, 702, 709, 711
breakdown, 531
generators, 52, 191
phase, 45, 70, 76, 86, 102, 180, 201, 205, 211, 221, 233, 240, 252, 254, 267-268, 271-272, 281, 283, 289, 318, 338, 462, 471, 496, 521, 525-529, 546, 629-630, 664, 695-696, 700-701, 707-708
series resonant circuit, 620
supply, 13, 45, 86-88, 92, 102-105, 107, 133, 142, 154-155, 161, 196, 227, 238, 263, 283, 287, 325, 333-334, 337-338, 437, 521, 677-678
terminal, 45, 88, 154, 334, 443, 492, 699
voltage divider, 152-153, 245, 272, 280, 447
Voltage drop, 225, 267
Voltage gain, 7, 9-10, 16, 61-62, 66, 113, 128, 142, 265, 287, 295, 309, 367
Voltage reference, 8-9
Voltage regulator, 137, 155
Voltage standing wave ratio (VSWR), 530, 554, 640
Voltage-controlled oscillator, 205, 228, 239, 250, 252, 272, 281, 283, 318, 462, 496, 713
Voltage-controlled oscillator (VCO), 228, 250, 272, 281, 318, 462
Voltmeter, 16, 56, 98, 101, 156, 289
Volume, 123, 140-141, 143, 145-146, 156, 161-162, 221-222, 238, 287, 309, 366, 379, 577, 673, 695
Volume control, 140, 143, 146, 156, 161-162, 238, 287, 309
VSWR test, 637, 685-686
VVC diodes, 117, 131, 713

## W

Water mark sticker, 459, 493, 713
Wattmeter, 106, 637
Wave propagation, 3, 12, 502, 559-605, 708, 713
Waveform, 29, 31, 33-34, 44-45, 57-58, 68, 71-74, 76-78, 84, 87, 96, 98, 101, 110, 112, 114, 122, 125-126, 141, 153-155, 167, 178, 184, 197-198, 208, 219, 243, 251, 266, 338, 356-357, 360, 365, 372, 393-395, 430, 433-434, 453, 490, 674, 706
Waveform distortion, 44, 101
waveforms, 2, 29-30, 34, 52, 57, 61, 71, 74, 87, 89,

98, 124, 127, 184, 199, 357, 372, 394, 399, 431, 480, 527, 556-557, 708, 710
alternating, 478
nonsinusoidal, 2, 61
Wavefront, 520, 522, 561, 563-564, 566-567, 574, 602, 659, 713
Wavefront reflection, 659
Waveguide, 535, 652-673, 683-693, 697-698, 700, 703, 712-713
Waveguide attenuation, 663, 691
Waveguide bends and twists, 664
Waveguide resonator, 673
Wavelength, 330, 503, 520-521, 529, 532-534, 536-537, 543, 554-557, 594-596, 599, 610-613, 615, 617-620, 622-623, 627-628, 631-632, 634, 641-643, 646-647, 652, 655-658, 660, 666, 670, 672, 683, 703-705, 708-709, 712-713
Wavetrap, 712-713
Web, 583, 587, 592, 595-596, 705
Weight, 168, 369
White noise, 3, 14, 713
Wideband deviation, 234
Wideband FM, 205, 217, 231, 243, 247-250, 254, 266, 268, 713
Wideband FSK, 461
WiMAX, 483, 713
Winding, 36, 40-44, 65, 93, 152, 169, 201, 246, 267
Winding resistance, 36, 40-44, 65
Wire, 15, 40, 43, 93, 105, 124, 156, 179, 183, 189-190, 237, 285, 322, 330-331, 437-438, 444-445, 455, 492, 504-511, 514-516, 520, 525, 544, 547-549, 553-555, 557, 611-612, 618, 620-621, 634-636, 647, 656, 672, 696, 701, 711-712
Wired digital communications, 403, 405-455, 713
Wireless, 4, 311, 422-423, 457-499, 681, 697, 699, 703, 705, 711, 713
Wireless digital communications, 457-499, 713
Wireless LANs, 483, 699
Wireless markup language (WML), 713
WMLScript, 713
Word, 105, 260, 312, 328, 351, 353-355, 364, 370-371, 375-380, 382, 384-385, 387, 436, 451, 658, 674, 707-708
WorldSpace, 590-591
Write, 63, 253, 284, 603

## X

xDSL, 713

## Y

Yagi-Uda antenna, 628, 645, 648, 713
Yellow alarm, 417
Yoke, 713

## Z

Zener diode, 189
Zener voltage, 155
Zero bias, 131, 160
Zero-carrier amplitude, 215
Zero-dispersion wavelength, 713
Zoning, 713