Fundamentals
M6
MATERIALS AND HARDWARE

Rev.-ID: 1OCT2013
Author: WaJ
For Training Purposes Only
©LTT Release: Dec. 16, 2013

EASA Part-66
CAT B1

Training Manual

Lufthansa Technical Training

For training purposes and internal use only.

© Copyright by Lufthansa Technical Training (LTT).

LTT is the owner of all rights to training documents and training software.

Any use outside the training measures, especially reproduction and/or copying of training documents and software – also extracts there of – in any format at all (photocopying, using electronic systems or with the aid of other methods) is prohibited.

Passing on training material and training software to third parties for the purpose of reproduction and/or copying is prohibited without the express written consent of LTT.

Copyright endorsements, trademarks or brands may not be removed.

A tape or video recording of training courses or similar services is only permissible with the written consent of LTT.

In other respects, legal requirements, especially under copyright and criminal law, apply.

Lufthansa Technical Training

Dept HAM US
Lufthansa Base Hamburg
Weg beim Jäger 193
22335 Hamburg
Germany

Tel: +49 (0)40 5070 2520
Fax: +49 (0)40 5070 4746
E-Mail: Customer-Service@LTT.DLH.DE

www.Lufthansa-Technical-Training.com

Revision Identification:

- The date given in the column "Revision" on the face of this cover is binding for the complete Training Manual.
- Dates and author's ID, which may be given at the base of the individual pages, are for information about the latest revision of that page(s) only.
- The LTT production process ensures that the Training Manual contains a complete set of all necessary pages in the latest finalized revision.

© Lufthansa Technical Training

M6 MATERIALS AND HARDWARE

FOR TRAINING PURPOSES ONLY!

© Lufthansa Technical Training

AIRCRAFT MATERIALS - GENERAL

Materials Overview

Metallic Materials

Having the nature of metal or containing metal.

Non-Metallic Materials

Containing no metal.

Ferrous Materials

Iron, or any alloy containing iron.

Non-Ferrous Materials

A metal which contains no iron.

FOR TRAINING PURPOSES ONLY!

© Lufthansa Technical Training

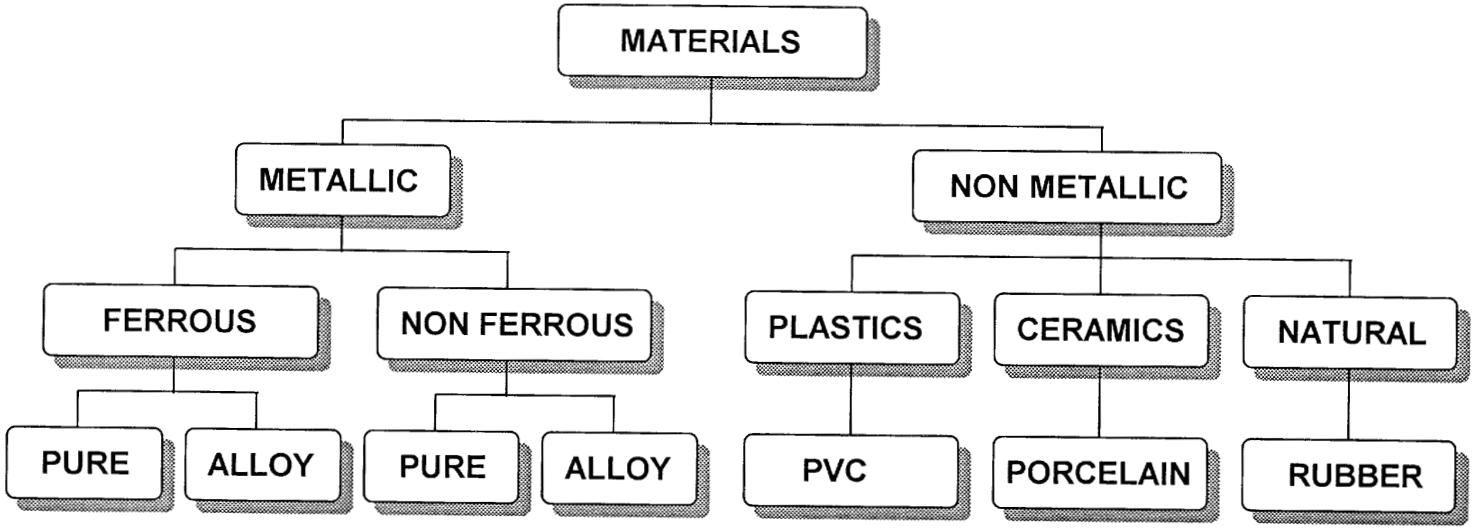

Figure 1 Metallic and Non-Metallic Materials

FOR TRAINING PURPOSES ONLY!

© Lufthansa Technical Training

General

Abbreviations

AA	Aluminium Association of America
AISI	American Institute of Steel and Iron
AL	Aluminium
ALF_3	Aluminium Fluorid
Al_2O_3	Aluminium Oxide
ALCOA	Aluminium Corporation of America
CAF_2	Fluorspar
Clad	Cladding
CO_2	Carbon Dioxide
Cr	Chromium
CRES	Corrosion Resistant Steel
Cu	Copper
DC	Direct Chill
F	As fabricated
H	Strain hardened
H_2O	Water
NA_3ALF_6	Cryolite
Ni	Nickel
Mg	Magnesium
Mn	Manganese
Mo	Molybdenum
O	Annealed
PSI	Pounds per Square Inch
SAE	Society of Automotive Engineers
Si	Silicon
T	Heat treated
Va	Vanadium
Zn	Zinc

Conversions

Fahrenheit to Celsius Conversion

- °C = (°F - 32) x 0,555

Celcius to Fahreinheit Conversion

- °F = °C x 1,8 + 32

FOR TRAINING PURPOSES ONLY!

© Lufthansa Technical Training

THIS PAGE INTENTIONALLY LEFT BLANK

FOR TRAINING PURPOSES ONLY!

© Lufthansa Technical Training

Definitions

Unit Stress

If a load (force) is uniformly distributed over a certain area, the force per unit of area, usually expressed in pounds per square inch, is called the unit stress or simply the stress.

- If the stress is the result of forces tending to stretch or lengthen the material it is called a **tensile stress**.
- If it compresses or shortens the material a **compressive stress**.
- if it sheares the material, a **shearing stress**.
- If it twists the material, a **torsion stress**

Tensile and compressive stresses always act at right angles to (normal to) the area being considered; shearing stresses are always in the plane of the area (at right angles to compressive or tensile stresses).

FOR TRAINING PURPOSES ONLY!

© Lufthansa Technical Training

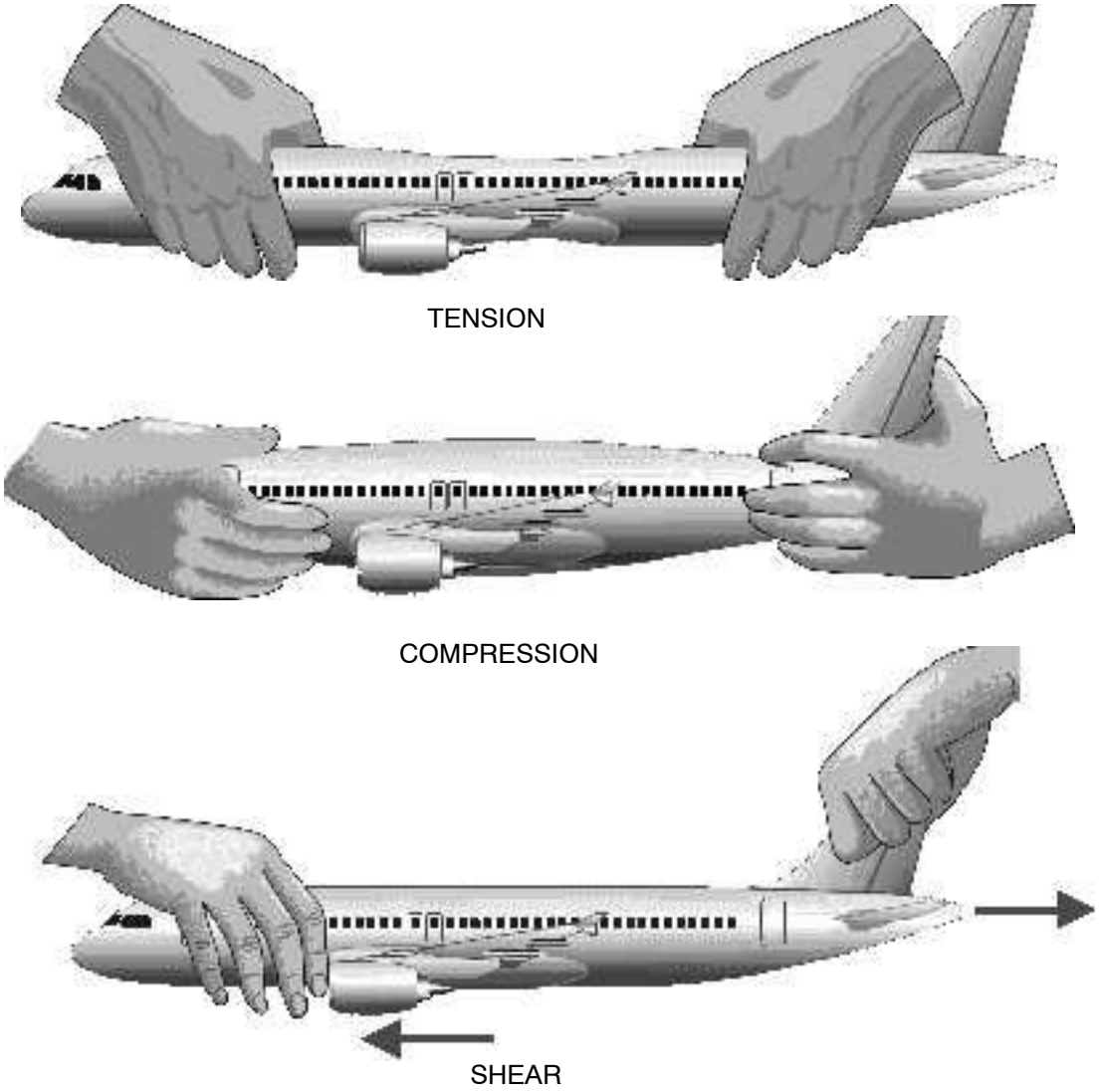

Figure 2 Stresses

FOR TRAINING PURPOSES ONLY!

© Lufthansa Technical Training

DEFINITIONS (CONTD.)

Strength of Materials

Strength of materials deals with

- the relations between external forces applied to an elastic body and the deformations and internal stresses resulting from those applied forces.
- the use of the principles of strength of materials to meet functional requirements.

Certain formulas that are used in strength of materials calculations are based solely on mathematical analyses; others (empirical formulae) are the result of experiment, test and observation. Whether of the former or the latter type, most of these formulae make use of certain concepts and experimentally determined physical properties of materials such as tensile strength, modulus of elasticity etc.

The meaning of some of these terms is explained in the following paragraphs.

Elasticity

A body is said to be perfectly elastic if, after it has been deformed by external forces, it returns completely to its original shape when the forces are removed. Although there are no perfectly elastic materials, steel and some other structural materials may be so considered in certain ranges of loading and deformation (see elastic limit). Partially elastic materials are those that do not completely resume their original shape when the external forces are released, some of the energy of deformation having been lost in the form of heat.

Teilweise elastische Materialien sind solche, die ihre Ursprungsform nicht mehr vollständig erreichen, wen die Kraft nicht mehr wirkt. Dies geschieht, weil Teile der Verformungsenergie in Form von Wärme verloren gegangen sind.

Combined Stress

When the stress on a given area is a combination of tensile and shearing stresses, or, compressive and shearing stresses, the resulting stress on the area is called a combined stress.

Simple Stress

When a tensile, compressive or shearing stress alone is considered to act, a body is said to be subject to a simple stress.

Poisson's Ratio

The ratio of lateral strain to longitudinal unit strain for a given material subjected to uniform longitudinal stress within the proportional limit.

- For steel, it equals 0.30.
- For wrought iron, 0.28.
- For cast iron, 0.27.
- For brass, 0.34.

Yield Strength

The maximum stress that can be applied to a material without permanent deformation of the material.

Ultimate Strength

The stress at which a material in tension, compression or shear will fracture.

Modules of Elasticity

Modulus of Elasticity: The ratio of stress to strain within the proportional limit of a material in tension or compression.

FOR TRAINING PURPOSES ONLY!

© Lufthansa Technical Training

Properties of Material

Hardness

Enables a material to resist penetration, wear or cutting action.

Strength

Ability of a material to withstand forces which tend to deform the metal in any direction, or the ability of a material to resist stress without breaking.

Elasticity

The ability of an object or material to be stretched and recover its size and shape after deformation.

Plasticity

The property of a metal which allows it to be reshaped.

Ductility

The property which allows metal to be drawn into thinner sections without breaking.

Malleability

That characteristic of material that allows it to be stretched or shaped by beating with the hammer or passing through rollers without breaking.

Toughness

The property of a metal which allows it to be deformed without breaking.

Brittleness

The property of a metal to break when deformed or hammered. It is the resistance to change in the relative position of the molecules within the material.

Conductivity

The characteristic of a material which makes it possible for it to transmit heat or electrical conduction.

Durability

The property of metal that enables it to withstand force over a period of time.

FOR TRAINING PURPOSES ONLY!

© Lufthansa Technical Training

Metal General

General

Metals consist of basic chemical elements which have different characteristics and properties:

- strength, heat-treatable or cold-workable
- crystal structure
- heat and electrical conductivity
- light impenetrability
- metallic gloss by light-reflection
- dissolvability in acids under formation of salts.

There are about 70 metals (chemical elements) which are used in different applications in technical fields combined in several variants of alloys and unalloyed conditions.

For airframe constructions, mainly lightweight metals are used, ie metals with a density less than 5 Kg/ dm^3.

The three most important lightweight metals in aircraft structure are:

- **Aluminium and Aluminium alloys** (density 2,7 Kg/dm^3)
- **Titanium and Titanium alloys** (density 4,5 Kg/dm^3)
- **Magnesium and Magnesium alloys** (density 1,74 Kg/dm^3)

On aircraft structures where high weights or higher strengths are needed, heavyweight metals and their alloys are applicable (density between 7,85 Kg/dm^3 and 9,5 Kg/dm^3).

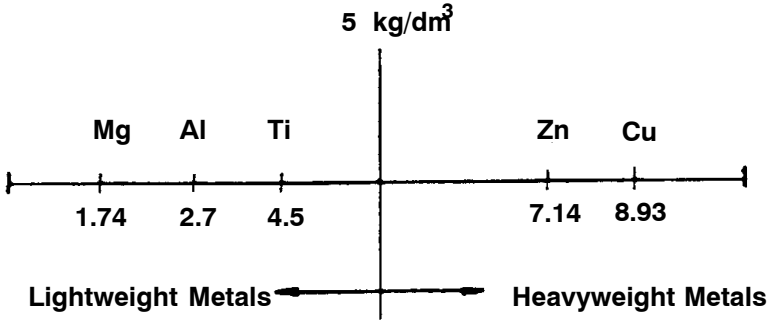

Mg – Magnesium
Al – Aluminum
Ti – Titanium
Zn – Zinc
Cu – Copper

FOR TRAINING PURPOSES ONLY!

© Lufthansa Technical Training

Metals of Aircraft Structure

Material	Elements	Density kg/dm^3	Melting Point	Intended use
Magnesium	Mg	1.74	650°C	are seldom used, mainly as alloy with Al,Zn,Mn
Silicon	Si	2.33	1420°C	as alloy ingredient only
Aluminum	Al	2.70	658°C	most commonly used Material- as pure aluminum and aluminum alloy
Titanium	Ti	4.50	1727°C	as pure titanium or titanium alloy
Zinc	Zn	7.14	419°C	as alloy ingredient only
Manganese	Mn	7.30	1250°C	as alloy ingredient only
Iron	Fe	7.86	1539°C	not in pure Form, Steel with C and alloy ingredient
Copper	Cu	8.93	1083°C	for electrical wire and alloy ingredient

FOR TRAINING PURPOSES ONLY!

© Lufthansa Technical Training

Crystal and Cells

General

Structural metals in solid state form as crystals. A crystal is a rigid body in which the constituent particles are arranged in a repeating pattern.

The basic building block of the crystal is known as a unit cell. The crystal is built from the repetition of these identical unit cells.

The most common unit cells are:

Body-Centered-Cubic (BCC)

The body centred cubic (BCC) has a total of nine atoms. One is at each corner of the cube and one in the centre.

Face-Centered-Cubic (FCC)

The face centred cubic (FCC) unit cells consists of 14 atoms. One atom is at each cube corner and one is in the centre of each face.

Aluminium, copper, gold, nickel, silver and iron are examples of metals that have the FCC form. These are ductile metals.

Hexagonal Closed Packed (HCP)

Cobalt, magnesium, titanium and zinc have the hexagonal close packed (HCP) arrangement. There are 17 atoms in HCP unit cells, one in every corner and one in the middle of the two faces.

FOR TRAINING PURPOSES ONLY!

© Lufthansa Technical Training

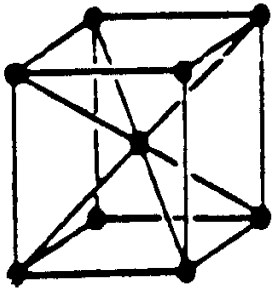

Body-Centered-Cubic

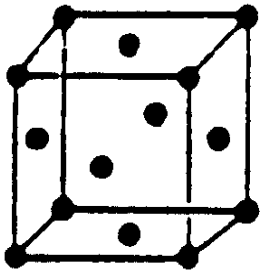

Face-Centered-Cubic

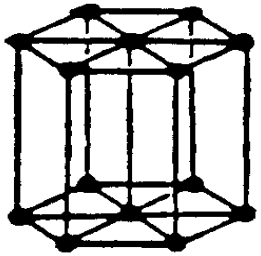

Hexagonal Closed Packed

Figure 3 Crystals and Cells

FOR TRAINING PURPOSES ONLY!

© Lufthansa Technical Training

Material Development

GENERAL

The selection of materials should be the best compromise between the quality of the material to fulfil the requested function and all costs (material prices, processing time and effort, maintain and repair of structure, etc) at the time of the aircraft development.

A change of material in existing programmes is difficult and expensive (a new airworthiness certification is necessary, changes in all programme documentation drawings).

Nevertheless, airframe manufacturers spend time and effort finding new solutions to raise the quality of the aircraft or to reduce manufacturing costs. Material specialists do this, for all existing programmes and for new developments in their specific field.

FOR TRAINING PURPOSES ONLY!

© Lufthansa Technical Training

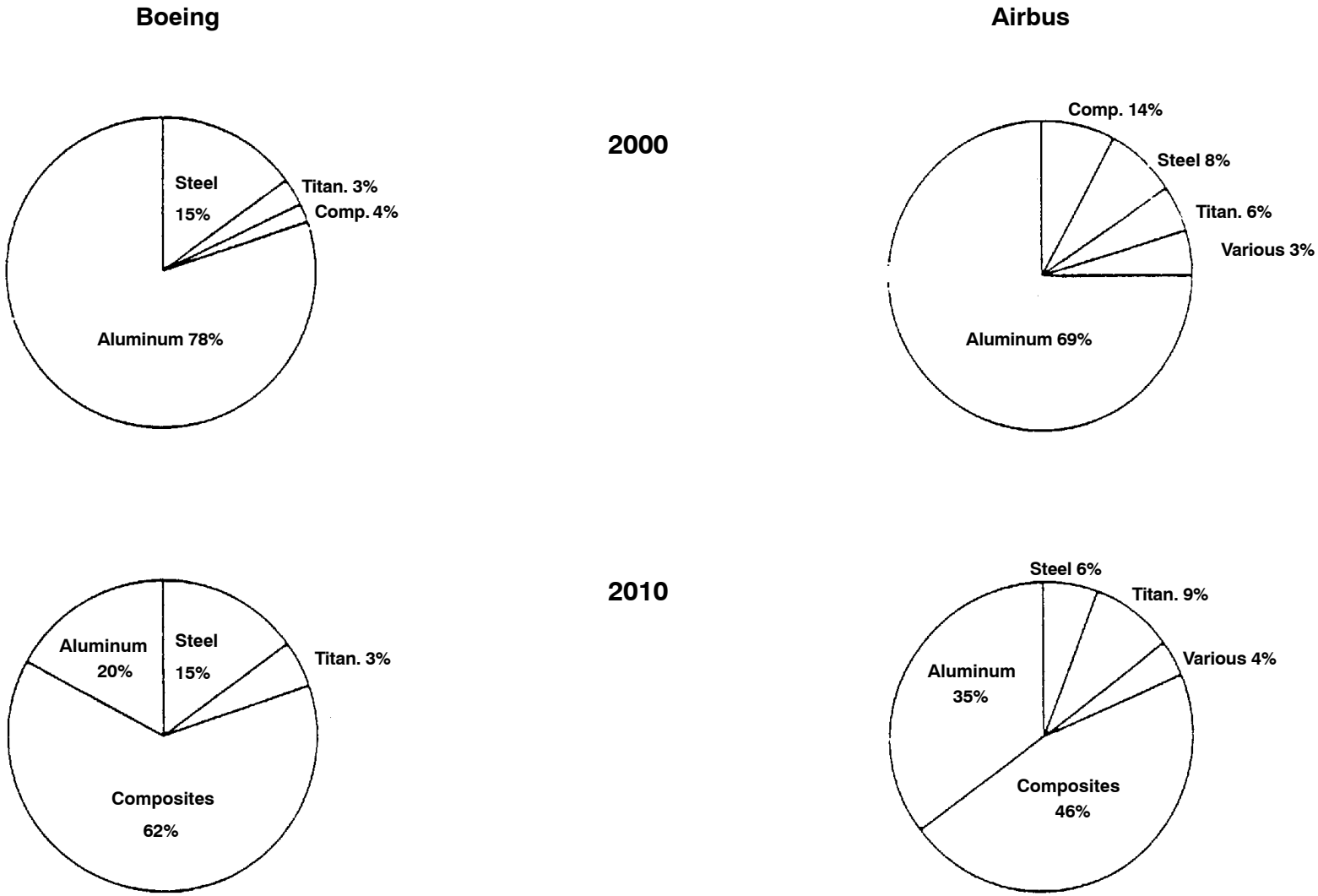

Figure 4 Material Development

FOR TRAINING PURPOSES ONLY!

© Lufthansa Technical Training

M6.1 AIRCRAFT MATERIALS - FERROUS

CHARACTERISTICS, PROPERTIES & IDENTIFICATION OF COMMON ALLOY STEELS

General

Introduction

The base material iron is the chemical element Fe which, in its pure form, is a very soft, malleable and ductile metal which is easy to form and shape.

Steels

In practical use pure iron is very seldom encountered, but it is mixed with various other alloying agents.

Steel is an excellent engineering material with many applications. For aircraft use, however, it does have some significant problems. The main restrictions are its high density of > 7,85 Kg/dm^3 (approximately 3 times the density of aluminium) and its susceptibility to corrosion.

The resistance of steel against corrosion can be increased by the addition of large quantities of certain alloying elements, but this can have significant effects on properties and costs.

Steel application in aircraft structures

Between 8 and 16% (Airbus A320: 9%, Boeing B777: 11%) of an aircraft's structure is alloy steel including stainless steels.

The high strength and high modulus of elasticity are the primary advantages of the high-strength steels. This is useful for designs with space limitations e.g. landing gear components or flap tracks.

FOR TRAINING PURPOSES ONLY!

© Lufthansa Technical Training

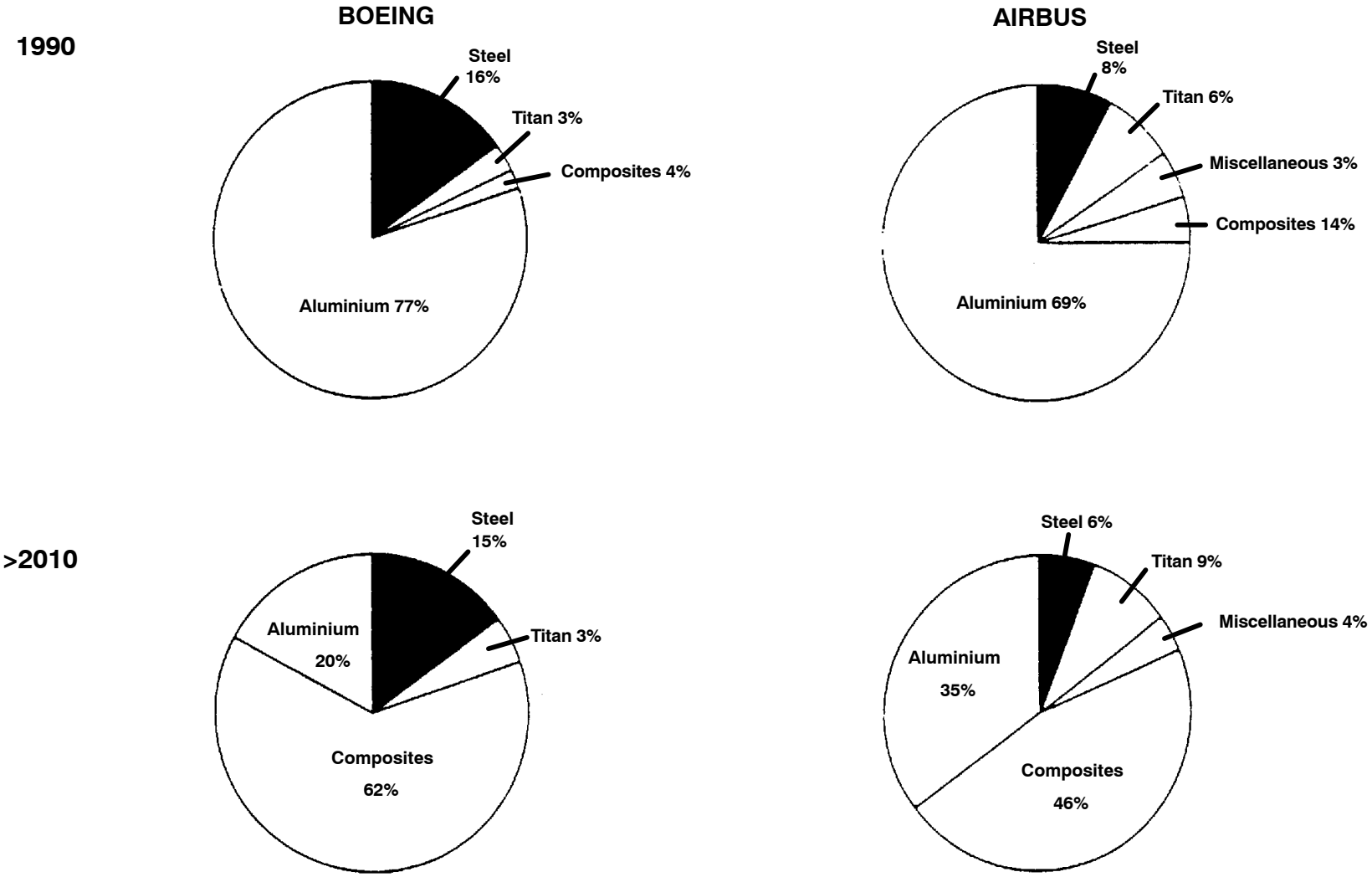

Figure 5 Prognosticated Material Proportions on Aircraft

FOR TRAINING PURPOSES ONLY!

© Lufthansa Technical Training

Steel Grades

General

Steel grades are the different kinds of steels and are distinguished by the specific properties, which are assured by the manufacturer.

The specific properties of the steels are given by different chemical composions (alloys) and specific heat treatments.

NON ALLOYED STEELS

Non alloyed steels can be distiguished into *construction steels* and *carbon steels*, but is has to be mentioned that they can also be differenced otherwise.

Construction steel

Carbon content 0,05 up to 0,5 %.

The weldability of this steel is good, but it's hardening is unspecific and the stiffness and ultimate strength is at a low level.

This steel is not used on aircraft due to it's relatively low ultimate strength value.

Carbon steel

Carbon content 0,5 up to 0,8%

This steel can be hardened, is suitable for annealing and surface hardening.

Due to the very low content of alloying elements of the non alloyed steels, the mechanical properies are sufficient for applications like:

- springs,
- tools,
- wires and welding wires.

This steel is used for aforementioned applications on aircraft.

FOR TRAINING PURPOSES ONLY!

© Lufthansa Technical Training

Strength of Non Alloyed Steels

Steel grade acc. to EN 10027 (DIN17100)	Tensile strength (Rm) in N/mm²	Yield strength (Re) in N/mm²	Carbon content (C) in %
S205 (former St 34)	340 bis 420	200 bis 210	0.17
S235 (former St 37)	370 bis 450	220 bis 240	0.20
S260 (former St 42)	420 bis 500	240 bis 260	0.25
E335 (former St 60)	600 bis 720	320 bis 340	0.40
Tool steel	depending on treatment		0.3 bis 1.6
Steels for quenching and tempering	depending on treatment		0.2 bis 0.6

Designations of Non Alloyed Steels

According to the EN 10027–Standard, letter „S“ is used for „Structural Steel“ (former: construction steel).

Letter „E“ is used for „mechanical engineering steels“ or the german word „Einsatzstahl“, which means „case hardening steel“.

FOR TRAINING PURPOSES ONLY!

© Lufthansa Technical Training

Alloy Steel on Aircraft Structures

General

The high density of steels reduces the amount on aircraft structure down to 8 up to 16%, depending on aircraft-model and aircraft manufacturer.

The high strength and high modulus of elasticity are the primary advantages of the high-strength steels. This is useful for designs with space limitations.

Material requirements

The selection of specific materials in these areas depends on requirements like:

- strength and hardness,
- stiffness and fatigue properties,
- corrosion resistance and service temperature.

Grades of steels on aircraft

Alloy steels on aircraft are broken down into two groups: **low alloy- and high alloy steels.**

Low alloy steels

For example gears, flap-ballscrews and flap-tracks are manufactured from high strenth alloy steels to sustain high service loads. For these applications, low alloy quenching and tempering steels are used, which are named „HHT“.

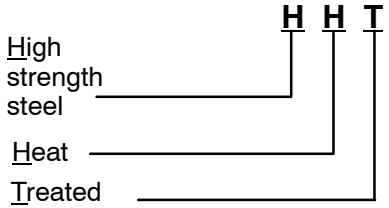

High alloy steels

Where corrosion resistance, anti chafing properties, wear resistance and heat resistance is required, stainless steels respectively high alloy steels are used in those areas (actuators, fittings, door sills, pylon-areas, anti-chafing plates in fuselage-, empenage- and flap-areas, also wash basins, etc.).

The abbreviation CRES means:

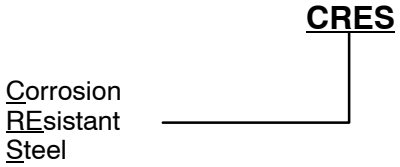

FOR TRAINING PURPOSES ONLY!

© Lufthansa Technical Training

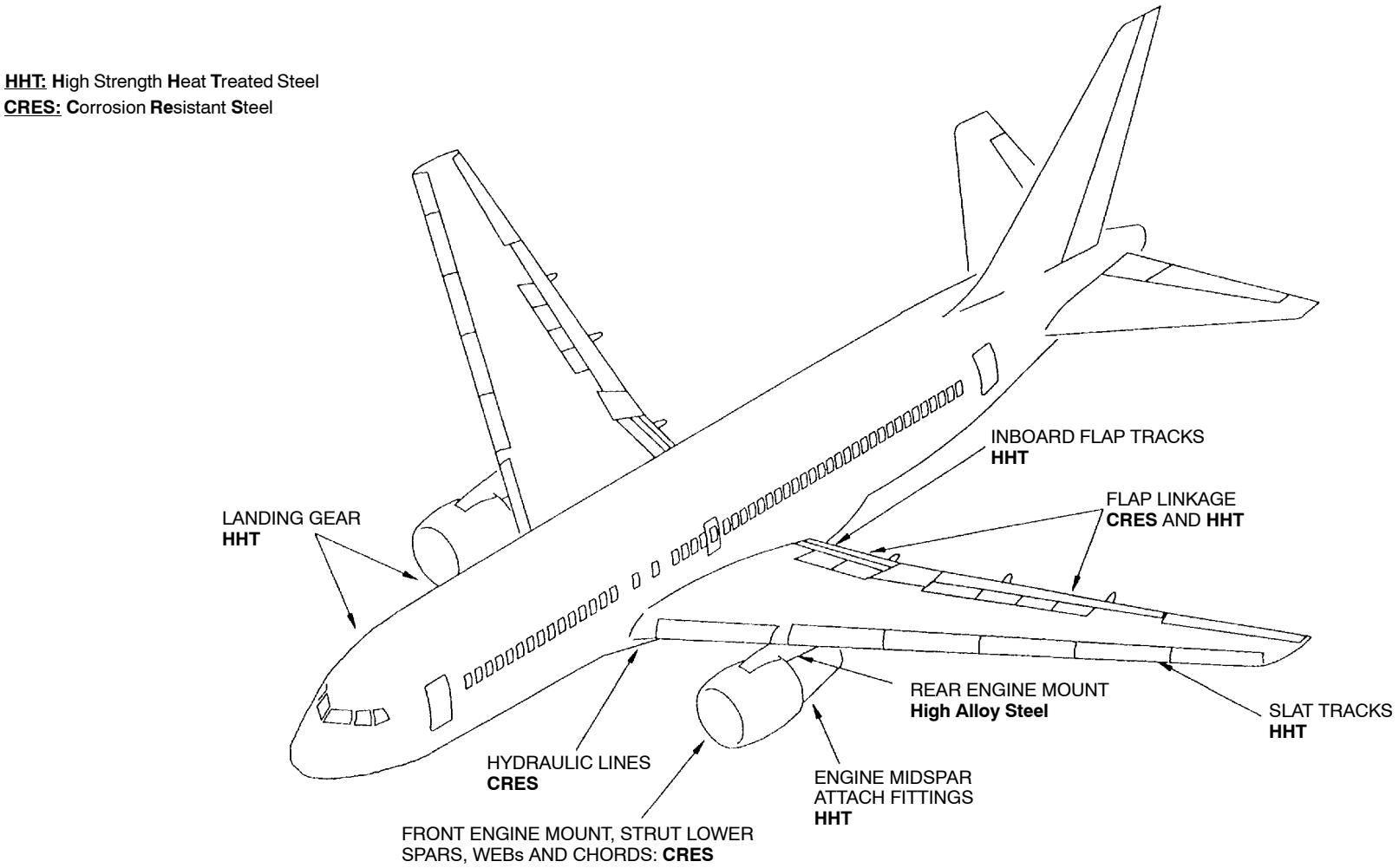

Figure 6 General Applications for Steel (A320)

FOR TRAINING PURPOSES ONLY!

© Lufthansa Technical Training

High Strength Heat treated Steels

Material consistence

Low alloy steels normally contain less than 5% of alloying elements/matals **and** between *0.25 and 0.8*% carbon.

Low alloy steels seldom may contain up to a total of 8% of alloying elements and between 0.25 and 0.8% carbon. In this case, the total of alloying elements exceeds the 5%-limit, but no single element by itself exceeds this limit.

Main properties

Most of the low alloy steels defy a non-cutting shaping process, like bending, beating, stretching or compressing.

But cold short may appear, if low alloy steels are shaped in a non-cutting process (without any heat treatment). Due to the tendency of low plastically elongation of these steels, stress cracking occurs in tensile load areas cause the fact, that yield strength and fracture are at very close quarters.

Designation of low alloy steels

Low alloy quenching and tempering steels are denominated as HHT (High Strength Heat Treated).

FOR TRAINING PURPOSES ONLY!

© Lufthansa Technical Training

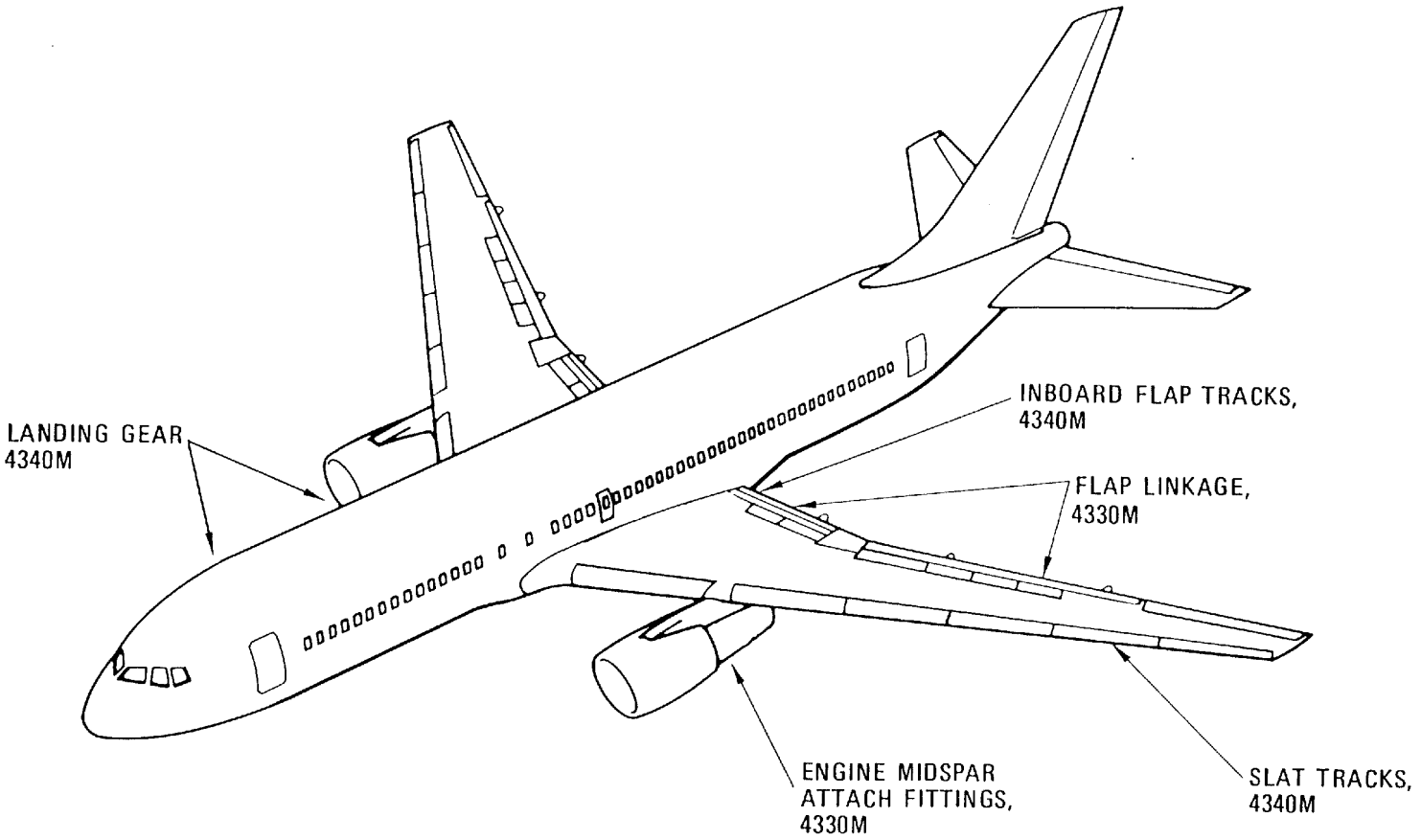

ALLOYS	(KSI) STRENGTH	FORMS	APPLICATIONS	USAGE RATIONALE
4340M	275-300	BAR AND FORGING	LANDING GEAR COMPONENTS FLAP TRACKS, FLAP CARRIAGES, FITTINGS	HIGH STRENGTH TO WEIGHT RATIO AND HIGH MODULUS OF ELASTICITY
4330M	220-240	BAR AND FORGING		

Figure 7 HHT-Application General

FOR TRAINING PURPOSES ONLY!

© Lufthansa Technical Training

Material designations of HHT-Steels

Common Aviation Standards

For aviation application, steels can be identified by the American AISI–Standard or the German Luftfahrtnorm. Due to the fact, that the german Luftfahrtnorm is rarely used, it won't be elaborated on.

AISI-STANDARD:

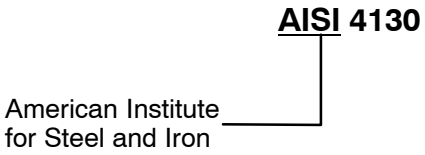

The system refers to the chemical composition of the alloy. The meaning of the the digits is:

First digit:

- **4** refers to the specific primary alloying element:
  - 1 only carbon or manganese
  - 2 Nickel
  - 3 Nickel-chromium
  - 4 Molybdenum alloy steel (Cr-Mo, Ni-Mo or Ni-Cr-Mo)
  - 5 Chromium
  - 6 Chromium-vanadium
  - 7 Tungsten-chromium
  - 8 Nickel-chromium-molybdenum
  - 9 Silicon-manganese or Ni-Cr-Mo

Second digit:

- **1** refers to the subrounded percentage of the primary alloying element.

Due to the limited capability of this simple encoding, a precise recoding of any alloy is not given!

Third and fourth digit:

- **30** refers to content of carbon in $^{1}/_{100}$ %.

FOR TRAINING PURPOSES ONLY!

© Lufthansa Technical Training

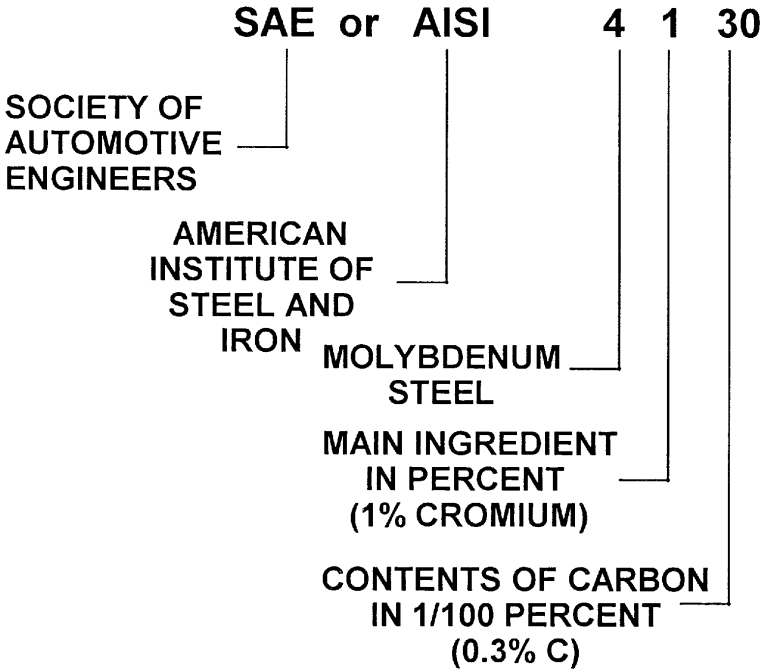

Figure 8 Material Designations

FOR TRAINING PURPOSES ONLY!

© Lufthansa Technical Training

Examples of HHT-Application on Aircrafts

Primary HHT-Steel alloys

Most widely used HHT-Steels on modern aircraft are the alloys:

- **4130**
  - is the common steel alloy for use in the 180-200 ksi range
- **4340**
  - **h**as a strength range of 200 ksi up to 280 ksi and is commonly used in the 260-280 ksi range.
- **300M**
  - an even higher strength alloy is 300M, most commonly used for aircraft landing gear components. It can be hardened to the 240-290 ksi range.

ALLOY	STRENGTH RANGE (K S I)					
	125 - 145	150 - 170	160 - 180	180 - 200	220 MIN	275 - 300
4340	X	X	X	X		
4330M		X		X	X	
9Ni-4Co-.30C					X	
4340M						X

FOR TRAINING PURPOSES ONLY!

© Lufthansa Technical Training

Main Landing Gear A340

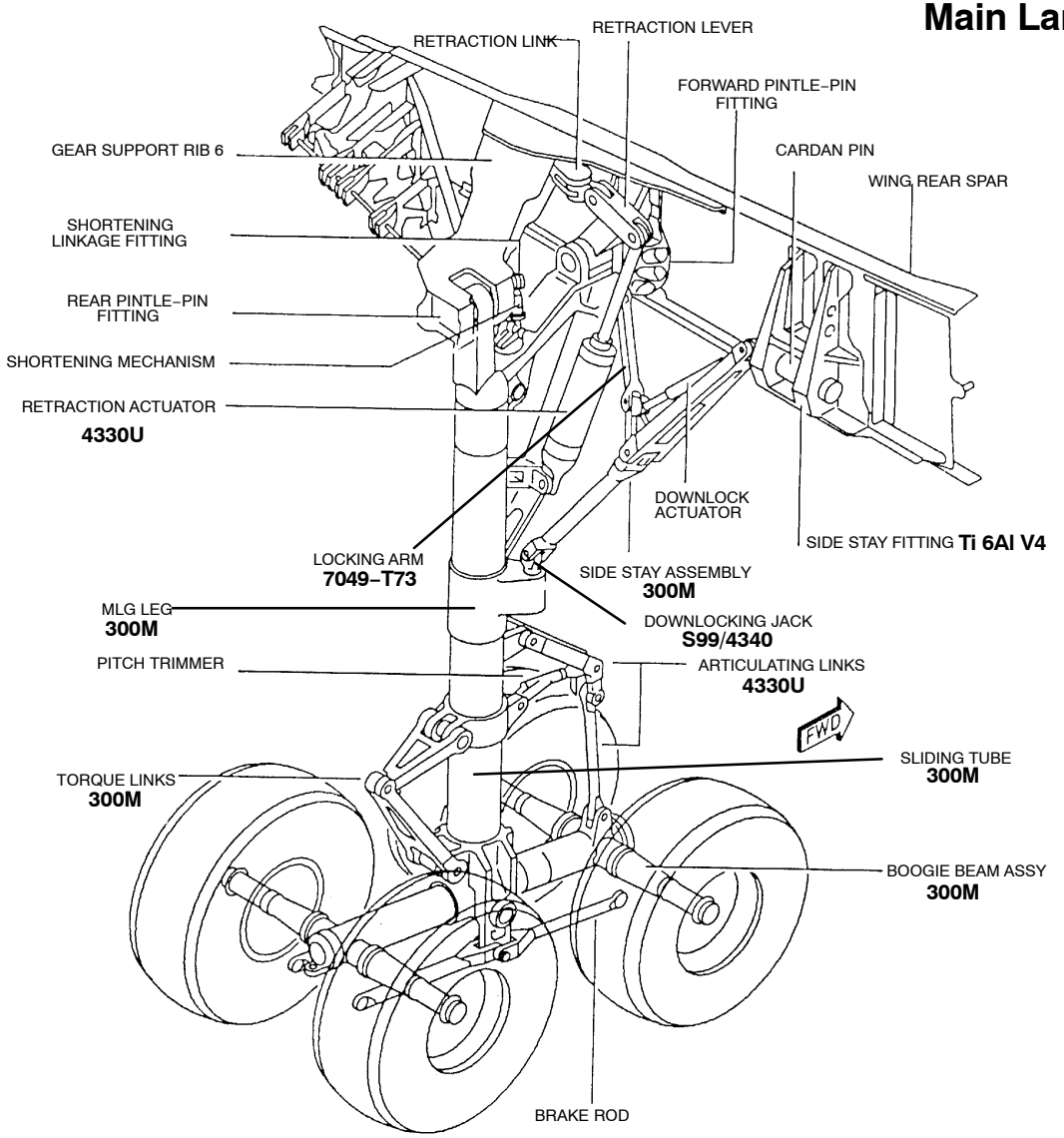

300M alloy is equivalent to AMS 6417 or 6419

6417 – 1,8%Ni, 1,6%Si, 0,82%Cr, 0,4%Mo, 0,08%V (0,38 – 0,43%C)

6419 – same as 6417, but carbon contend slightly changed (0,4–0,45%)

4330 – 1,8%Ni, 0,88%Cr, 0,42%Mo, 0,08%V (0,28 – 0,33%C)

4330U – same as 4330, but with specific material test

4340 – 1,8%Ni, 0,80%Cr, 0,25%Mo (0,38 – 0,43%C)

Figure 9 HHT-Application Main Gear

FOR TRAINING PURPOSES ONLY!

© Lufthansa Technical Training

High Alloy Steels

General

In aviation, steels are designated as high alloy steels, if the content of a single alloying element exceeds the 5%-limit, respectively the sum of all alloying elements exceeds the 8%-limit.

Main properties

In areas with demands to resitance to high temperatures, corrosion, against chemical attacks, high alloy steels are often used on aircraft.

Designations of high alloy steels

High alloy steels in aviation are designated as CRES, if they are corrosion resistant (≥ 12% Cr).

The creation of the word CRES must not misled, that CRES is only a trade name as e.g.: *Inconel X, Rene 41, Waspaloy.*

High alloy steel *X10CrNi18-8* according to German-Standard is called in english language usage **CRES 18–8**.

AISI–Standard

Within the AISI-Standardisation, this material is designated as AISI 301, or SAE AISI 30 301 and can only be decoded by the appropiate material data sheet.

Precipitation hardening of CRES

The letters **„PH"** of an CRES-material indicate, that approx. 1% aluminium was alloyed for „Precipitation Hardening".

The precipitation hardening process on high alloy steels increases the yield strength by temperature depending solution of aluminium atoms within the iron-crystal. These atoms will be precipitated during quenching, causes tenseness within the crystal lattice, this serves to harden the material.

Example:

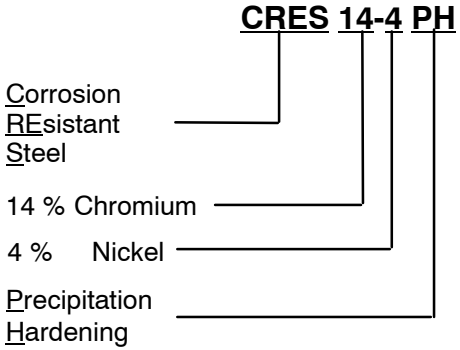

Examples of application

In areas whith high in-service temperatures (up to 700°C at aft engine attach fittings) in addition to high strength requirements, high alloy steels like Inconel 718 (1.400 N/mm^2), and for the fwd. engine attach fitting PH13–8Mo (1.650 N/mm^2) is used.

Other parts with reduced strength requirements (e.g.: Pylon-spars, -panels, -ribs, hydraulic lines, anti-chafing paltes etc.) are made of CRES 15-5 PH or CRES 17-4 PH (1.275 N/mm^2 repectively1.000 N/mm^2) due to efficiency reasons.

FOR TRAINING PURPOSES ONLY!

© Lufthansa Technical Training

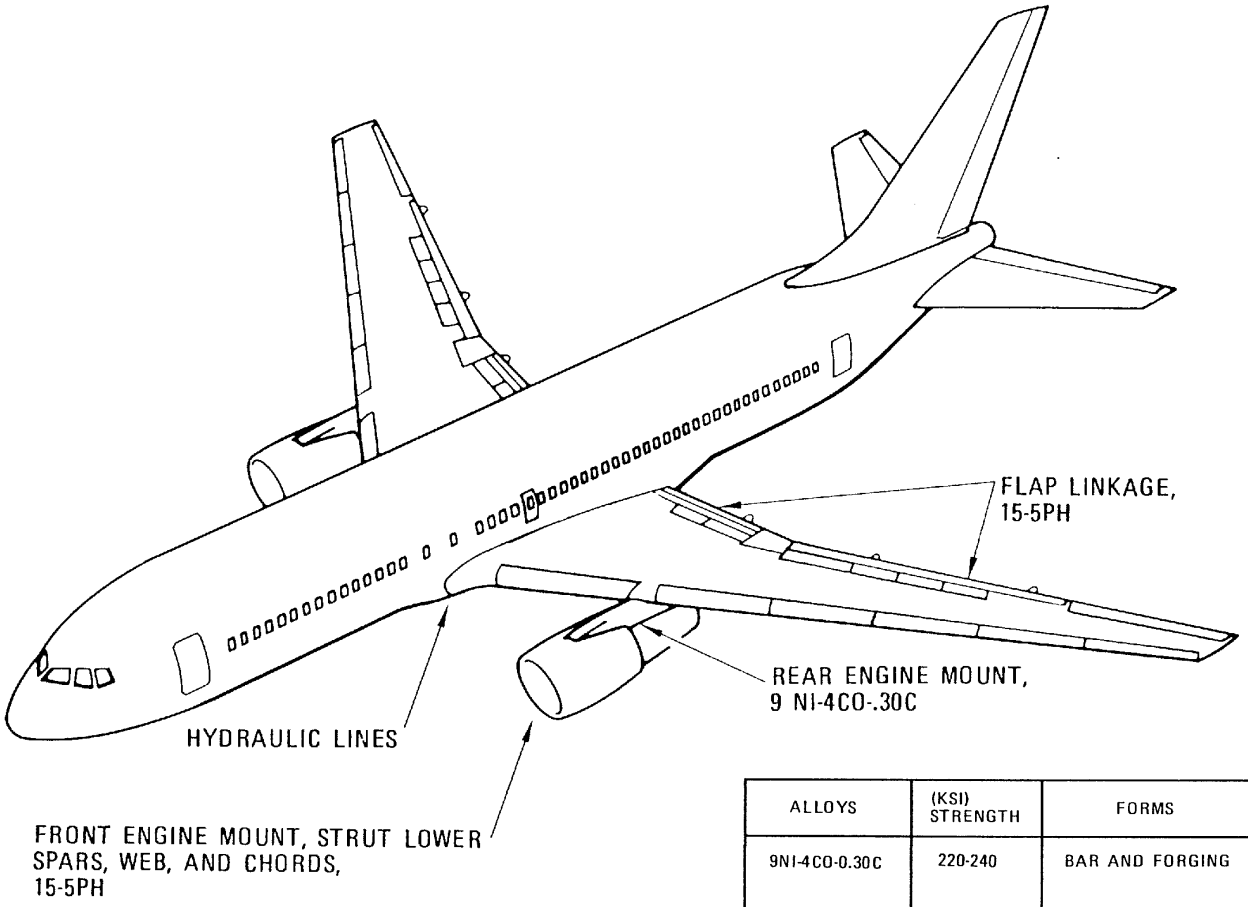

ALLOYS	(KSI) STRENGTH	FORMS	APPLICATIONS	USAGE RATIONALE
9NI-4CO-0.30C	220-240	BAR AND FORGING	AFT ENGINE MOUNTS	ELEVATED TEMPERATURE STABILITY AND HIGH STRENGTH
15-5PH	180-200 150-170	STAINLESS STEEL BAR AND FORGINGS	ACTUATORS, ROD ENDS, FITTINGS, MECHANISMS	CORROSION RESISTANCE AND HIGH MODULUS
21-6-9 304/321/347	142-162 75 MIN.	TUBING	HYDRAULIC SYSTEMS, INSTRUMENT LINES	CORROSION RESISTANCE, FABRICABILITY, AND HIGH STRENGTH
15-5PH	180-200 150-170	SHEET	LAVATORIES AND GALLEYS, DOOR THRESHOLDS, STRAPS	CORROSION RESISTANCE, HIGH STRENGTH, AND FABRICABILITY
17-4PH	180-200 150-170	CASTINGS	CONTROL LEVERS, FITTINGS, HOUSINGS	CORROSION RESISTANCE, AND FABRICABILITY

Figure 10 CRES-Application General

FOR TRAINING PURPOSES ONLY!

© Lufthansa Technical Training

Alloying Ingredients

General alloying elements

The main alloying agents of steel are:

- **Carbon**
  the most important element.
- **Sulphur**
  increases the brittleness.
- **Manganese**
  produces a clean, tough and uniform metal.
- **Silicon**
  acts as a hardener.
- **Phosphorous**
  raises the yield strength and corrosion resistance.
- **Nickel**
  adds strength and hardness. Nickel is the major ingredient for corrosion resistant steel.
- **Chromium**
  increases the strength, wear and corrosion resistance.
- **Molybdenum**
  increases impact strength and elastic limit.
- **Vanadium**
  increases the tensile strength and toughness.
- **Titanium**
  reduces the brittleness of the steel.

FOR TRAINING PURPOSES ONLY!

© Lufthansa Technical Training

NUMERALS AND DIGITS	TYPE OF STEEL
1XXX	CARBON STEELS
10XX	PLAIN CARBON STEEL
11XX	FREE CUTTING STEELS
13XX	MANGANESE STEELS (1.6-1.9%)
2XXX	NICKEL STEELS
23XX	NICKEL STEELS (3.5%NI)
25XX	NICKEL STEELS (5.0%NI)
3XXX	NICKEL CHROMIUM STEELS
30XX	NI CR STEELS (9.70%NI, 0.07% CR)
31XX	NI CR STEELS (1.25%NI, 0.60% CR)
32XX	NI CR STEELS (1.75%NI, 1.00% CR)
33XX	NI CR STEELS (3.50%NI, 1.50% CR)
30XXX	CORROSION AND HEAT RESISTING
40XX	MOLYBDENUM STEELS
41XX	CHROMIUM MOLYBDENUM STEELS
43XX	NICKEL CHROMIUM MOLYBDENUM STEELS
46XX	NI MO STEELS (1.75% NI, 0.25% MO)
48XX	NI CR STEELS (3.50% NI, 1.50% CR)
5XXX	CHROMIUM STEELS
51XX	LOW CHROMIUM
52XXX	MEDIUM CHROMIUM
51XXX	CORROSION AND HEAT RESISTING
6XXX	CHROMIUM VANADIUM STEELS
61XXX	CHROMIUM VANADIUM STEELS (1.00% CR)
8XXX	NATIONAL EMERGENCY STEEL
9XXX	SILICON MANGANESE STEELS
92XX	SILICON MANGANESE STEELS (2.00% SI)

Figure 11 Alloying Elements

FOR TRAINING PURPOSES ONLY!

© Lufthansa Technical Training

Properties of HHT-material

REWORK PRECAUTIONS FOR HHT STEEL-HANDLING

General

When doing rework operations on HHT-Steel parts, some precautions must be observed, to avoid negativ influence to the specific material-properties.

Following HHT-material sensitivities are identified as a significant item:

- Notch sensitivity
- Cold-shortness sensitivity
- Temperature sensitivity
- Hydrogen embrittlement

Notch Sensitivity

Since most steel parts are highly-stressed, localized stress concentrations are undesirable, must be avoided/respectively should always be removed.

Small surface damage such as scratches, nicks or corrosion causes a change of stress distribution of the component, risk of cracking would be the result.

Cold-Shortness Sensitivity

Socalled „cold-shortness“ occurs when low-alloyed steels are deformed chipless in the cold state. Due to light strain, that is low plastic moldability, cracks similar to stress cracks occur at the strained areas.

The reason for this is that practically no plastic strain occurs, which means that the yield strength and the crack lie very closely together.

FOR TRAINING PURPOSES ONLY!

© Lufthansa Technical Training

Temperature Sensitivity

With components made of hardened steel, an accidental application of heat, such as mechanical processing/overheating during flight, can lead to structural changes of the material and loss of stability.

On principle, the different maximum permissible working temperatures of the different alloys may not be exceeded.

NOTE: Mechanical processing of HHT-components should only be carried out with hand tools or slowly running hand-held machines.

Hydrogen Embrittlement

Any wetting with acidic fluids or mordants can lead to hydrogen embrittlement of the surface of HHT-components.

Critical are, for example, phosphate-ester-acids (hydraulic fluids such as „Hyjet“), vinegar sealant (RTV 159), and paint systems such as wash-primers.

This will result in stress cracks, which often spread through the entire component and lead to its failure, due to an unfavorable crack propagation resistance.

FOR TRAINING PURPOSES ONLY!

© Lufthansa Technical Training

PROPERTIES OF HHT-MATERIAL

General

The following properties of HHT-steels have been identified as significally problematic in the past, with regard to the sensitivity:

- Notch sensitivity
- Cold-shortness sensitivity
- Hydrogen embrittlement
- Temperature sensitivity at temperatures above about 250°C (depending on the material)

NOTCH SENSITIVITY

General

HHT-steels are subjected to special thermal treatment due to mechanical requirements (hardness, strength, strain, toughness). In the process, a task-specific optimum of hardness and strength should be achieved.

Due to a reatively high original strength of a minimum of 180 KSI/1240N/mm^2 and concurrent surface hardening, these components are especially prone to notch sensitivity.

CAUTION: MINOR DAMAGES, SUCH AS STRIAE, NOTCHES OR RUST ON THE SURFACE LEAD TO A CHANGE OF STRESS DISTRIBUTION IN THE COMPONENT, WHICH RESULTS IN A RISK OF CRACKING.

When the load spectrum changes continuously or suddenly, this inevitably leads to socalled fatigue fracture.

Impact loading, e.g. on the landing gear, are caused by:

- Landing shock, which means high static loads.

continuous loads are caused by:

- Rolling motion on the ground, which means dynamic loads due to alternating loads.

These problems increase, the more hardness and strength of the material increase.

FOR TRAINING PURPOSES ONLY!

© Lufthansa Technical Training

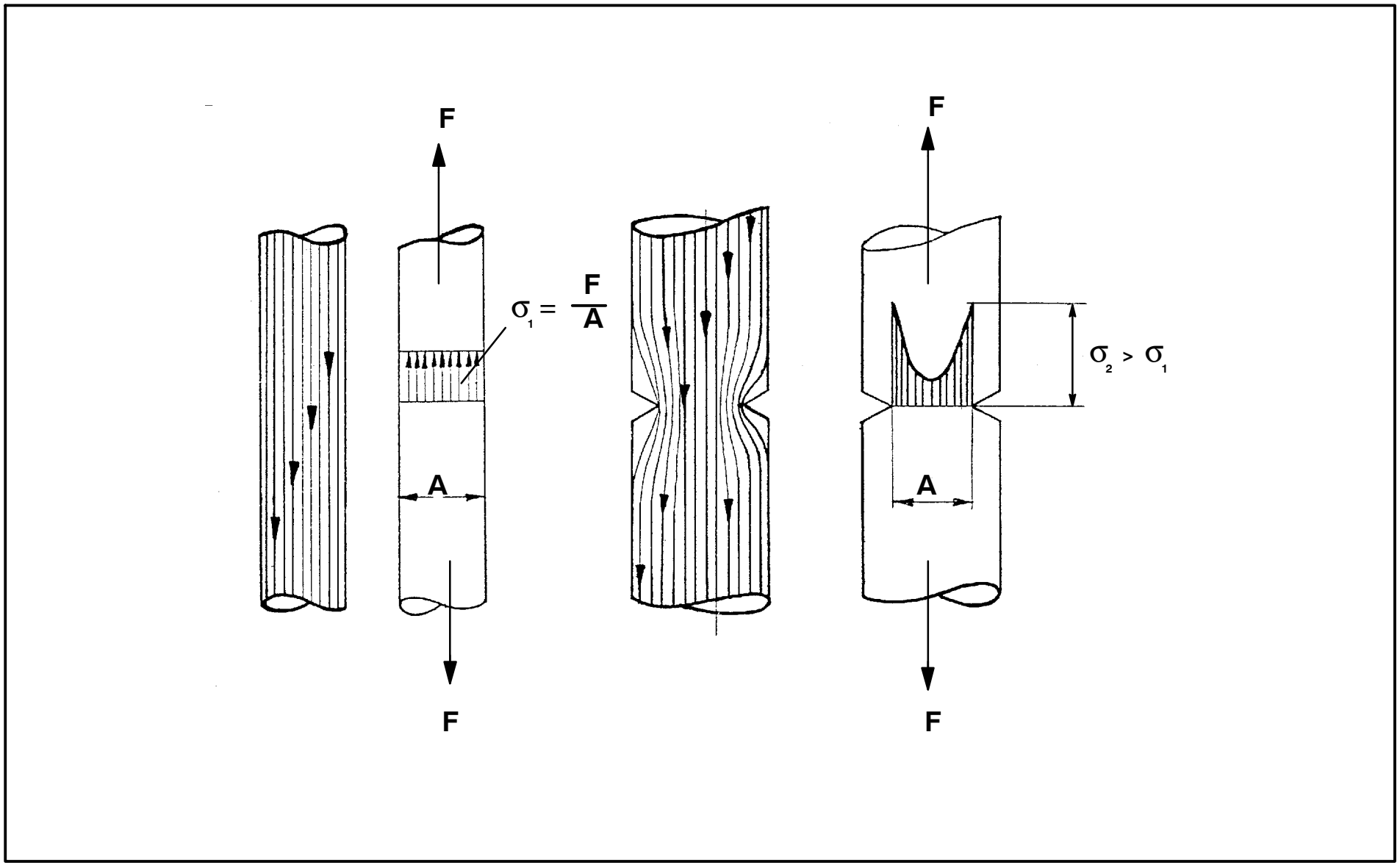

Figure 12 Notch Sensitivity

FOR TRAINING PURPOSES ONLY!

© Lufthansa Technical Training

COLD-SHORTNESS SENSITIVITY

General

Almost all low-alloyed steels resist chipless deformation in the cold state, such as bending, forcing, stretching and compressing.

Socalled „cold-shortness“ occurs when low-alloyed steels are deformed chipless in the cold state. Due to light strain, that is low plastic moldability, cracks similar to stress cracks occur at the strained areas.

The reason for this is that practically no plastic strain exists in these materials, which means that the yield strength and the crack lie very closely together.

In most cases, embrittlement occurs in the deformed area, in connection with cold-shortness.

FOR TRAINING PURPOSES ONLY!

© Lufthansa Technical Training

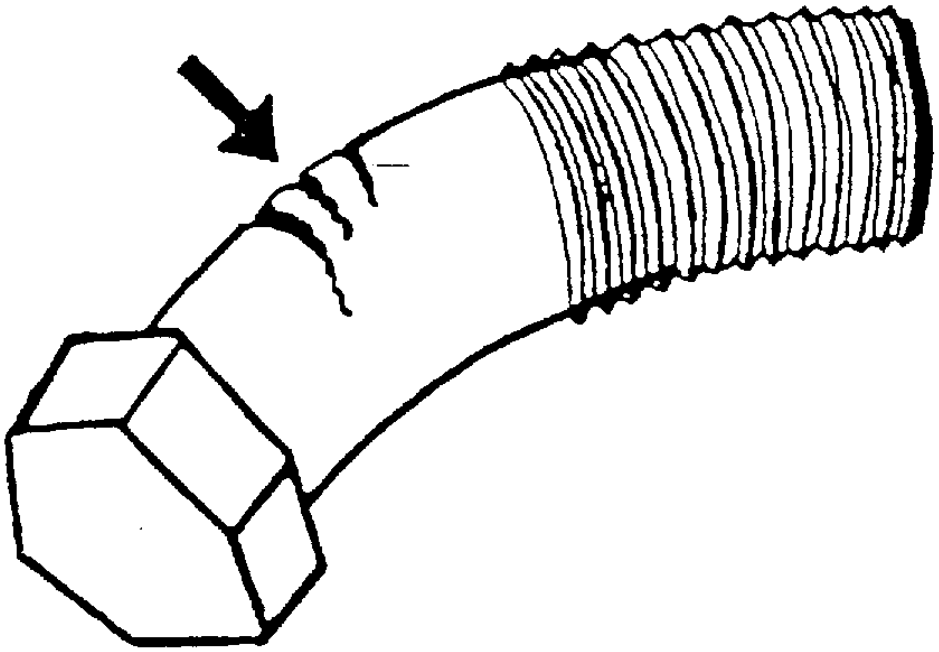

Figure 13 Cold-Shortness Sensitivity

FOR TRAINING PURPOSES ONLY!

© Lufthansa Technical Training

HYDROGEN EMBRITTLEMENT POTENTIAL

General

Hydrogen embrittlement is a phenomenon that occurs in various metal systems, particularly ferrous and titanium alloys, under sustained loads at stresses far below the actual ultimate tensile strength.

CAUTION: FRACTURE OF THE PART CAN OCCUR UNDER LOADS AS LOW AS 30% OF THE YIELD STRENGTH AFTER ONLY A FEW THOUSAND SERVICE HOURS.

The susceptibility of steel parts to hydrogen embrittlement increases as the hardness and strength increase. Steel parts heat-treated to 200 KSI and above are highly susceptible whereas parts heat-treated to 180-200 KSI are only susceptible if they are subjected to high sustained stresses.

Aluminium, 300 series stainless steels and precipitation hardenable steels (15-5 PH etc) are not affected.

Procedure of hydrogen embrittlement

In ferrous alloys, hydrogen embrittlement occurs when an alloy steel or a 400–series stainless component containing small amounts of hydrogen is subjected to a sustained load.

The hydrogen can be introduced into the component during processing. Certain solvents and plating processes can introduce hydrogen into the surface of the part.

The hydrogen will migrate to an area of triaxial stresses (such as occur at notches, corrosion pits or other stress raisers) once it is present in the metal surface. The resulting hydrogen concentration then causes the initiation and propagation of a brittle crack.

The stresses required for an embrittlement failure may be caused by improper processing or installation-induced residual stresses rather than service induced.

Hydrogendesorption

Since only a very thin surface layer will be affected, the hydrogen can easily be removed by a bake operation at 375°F (190°C) as long as the part is bare (unplated) or plated with a porous plating such as titanium-cadmium plating.

FOR TRAINING PURPOSES ONLY!

© Lufthansa Technical Training

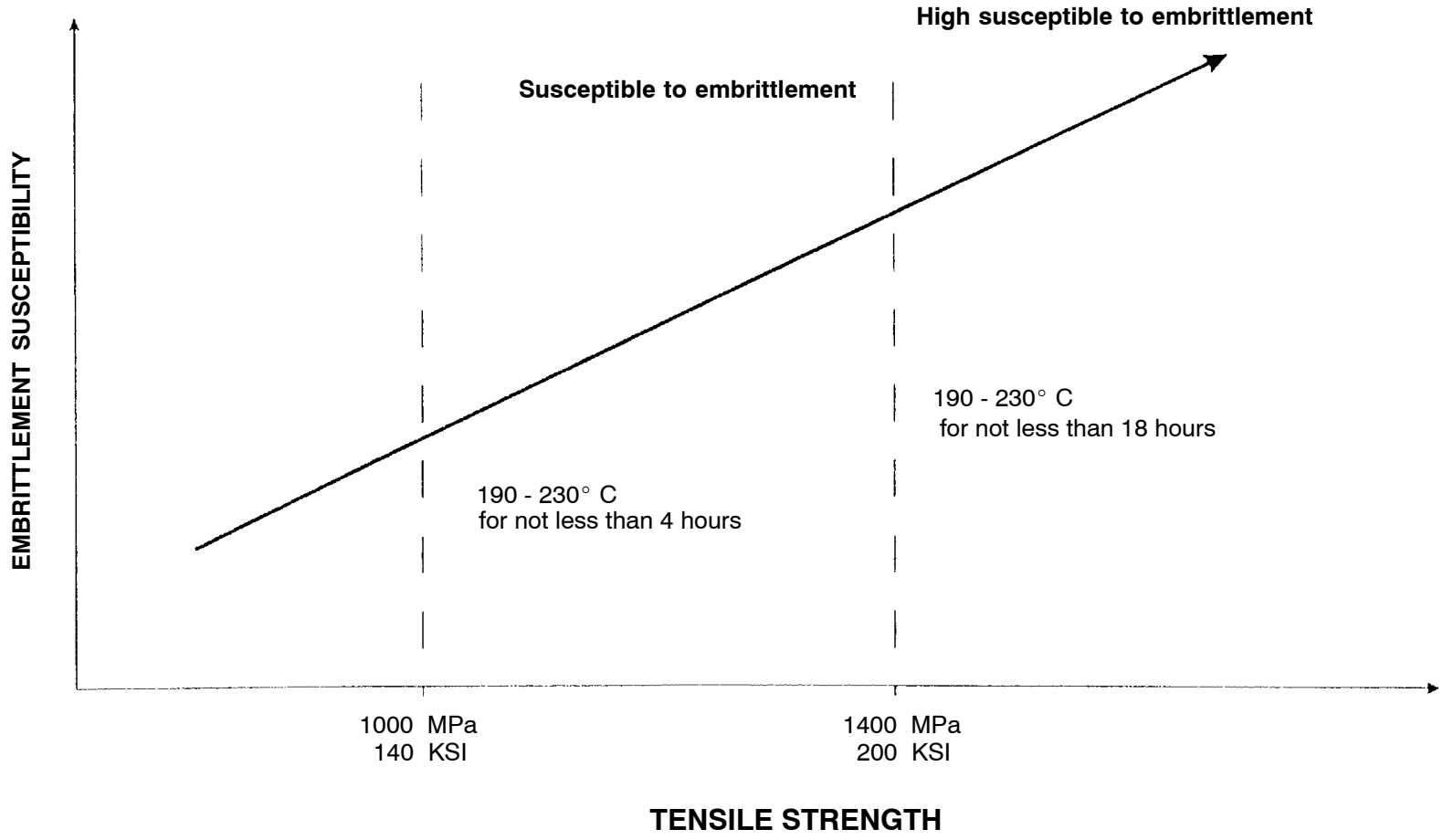

Figure 14 Hydrogen Embrittlement

FOR TRAINING PURPOSES ONLY!

© Lufthansa Technical Training

TEMPERATURE SENSITIVITY OF HHT-MATERIAL

General

HHT-steels are only hardenable because of carbon, which means that this type of steel can only be hardened due to the existence of a certain carbon content.

At this, a special material structure is created by specific thermal treatment in order to achieve a specific optimum of hardness and strength.

If however a HHT-component is subjected to incorrect mechanical processing, or accidental application of heat during flight, this can lead to structural changes of the material.

This leads to softening zones or overcuring zones, depending on the temperatures acting on the respective alloy.

CAUTION: BLUNT LATHE TOOLS, MILLING CUTTERS, DRILLS, TOO HIGH ROTARY SPEEDS, TOO HIGH FEED RATE/CONTACT PRESSURE, INSUFFICIENT COOLING AND SO ON LEAD TO FRICTION TEMPERATURES WHICH CAN CAUSE STRUCTURAL CHANGES OF THE MATERIAL! SURFACE TEMPERATURES HIGHER THAN ABOUT 250°C HAVE TO BE AVOIDED AT ALL COSTS WITH STEELS WITH A STRENGTH OF 220 KSI (1540N/MM^2) OR HIGHER!

FOR TRAINING PURPOSES ONLY!

© Lufthansa Technical Training

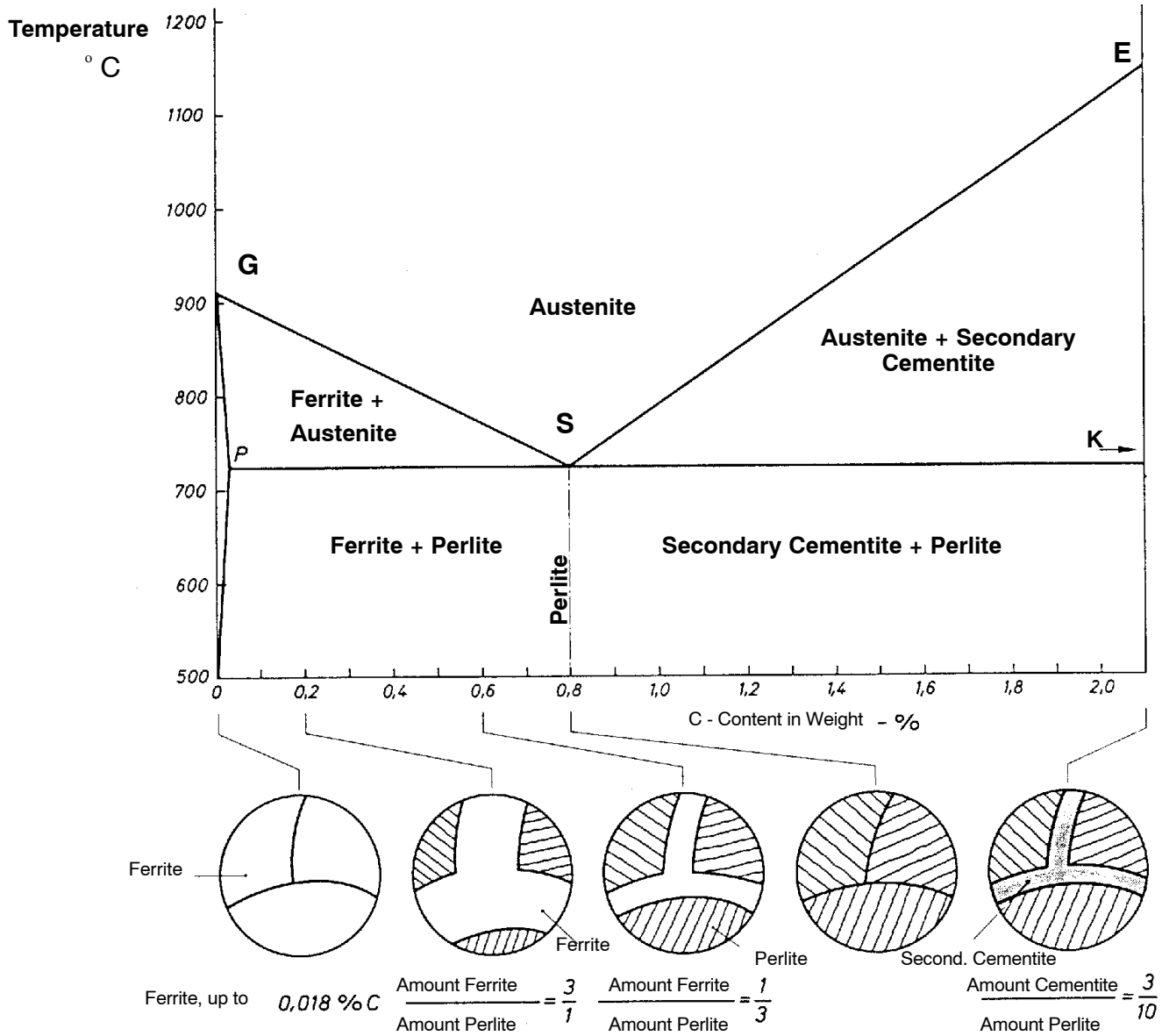

Figure 15 Cutout of the Fe - C - Diagram

FOR TRAINING PURPOSES ONLY!

© Lufthansa Technical Training

Steel Alloys and their Heat Treatment

LOW ALLOY STEELS

General

Selection of high-strength alloy steel is based upon high tensile-to-yield ratios. The best strength-weight ratios are achieved by heat treating steels at the maximum range that yields the desired structural reliability.

Experience shows that steels heat treated near the upper limits exhibit a tendency to fracture without appreciable deformation. Therefore, selecting steel whilst only considering only maximum tensile strength and hardness can result in premature failure when subjected to impact loads. Such failures can occur during attachment of fittings or rough shop handling. These loads can be either dynamic or static in origin and, although not great, be sufficient to cause failure in brittle steel.

Because of this, steels are tempered to lower tensile strengths, which will increase impact values. The problem is to select a steel that will give the service desired.

For material selection, the toughness characteristics of steel alloys must be determined. Toughness of a material is the ability displayed to absorb energy by deformation.

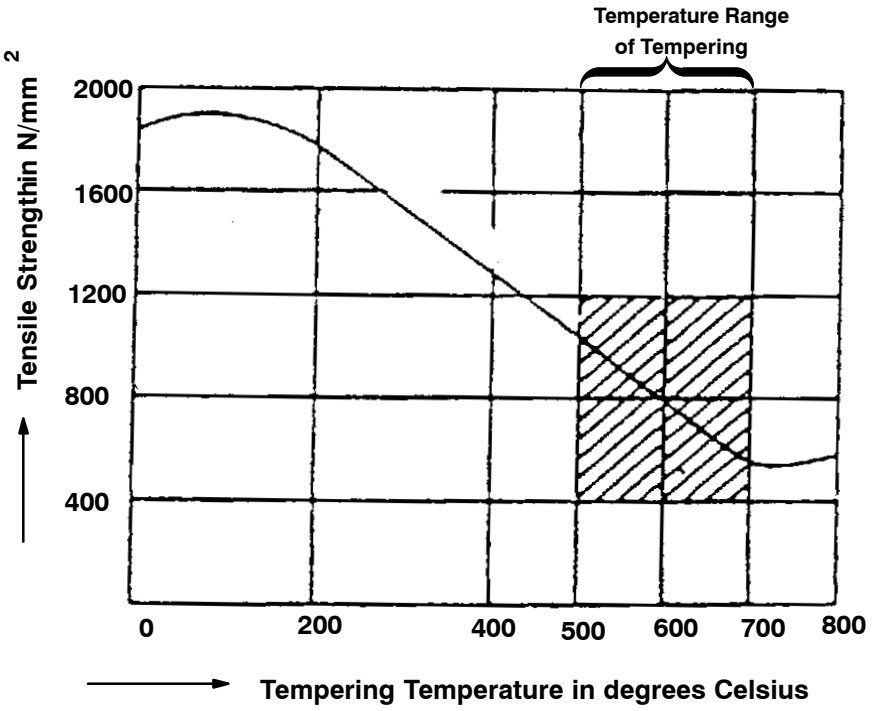

Figure 16 Influence of Tempering on the Strength

FOR TRAINING PURPOSES ONLY!

© Lufthansa Technical Training

	300M (S155)	35NCD16
ULTIMATE TENSILE STRENGTH	1950	1800
0.2% PROOF STRENGTH	1550	1400
EL%	8	6

Good Fatigue

Good Fatigue
Good Fracture Toughness
Good Resistance to Stress Corrosion and Hydrogen Embrittlement

Figure 17 Properties of Steel-Alloys

FOR TRAINING PURPOSES ONLY!

© Lufthansa Technical Training

STEEL ALLOYS AND THEIR HEAT TREATMENT (CONTD.)

Hardending of Carbon Steel in General

Steels are only hardenable due to the existence of a certain carbon content.

On principle, the curing temperature of carbon steels depends on the carbon content and is done above the G-S-E-line, which means above the solution annealing line of the carbon. The steel has to contain a minimum of 0,2% carbon, to be hardenable.

Hardening Process

In the hardening process, the steel is annealed above the G-S-E-line for a certain time, and then quenched.

The quenching is done using water, oil or a different medium.

This creates a socalled untempered martensite, whose structure is brittle, similar to the brittleness of glas. Thus, the steel has to be aftertreated respectively, before it can be mounted.

Tempering of Steel

During the subsequent tempering process with temperatures just below the G-S-E line, the martensite is tempered. This leads to the structure becoming very fine, the hardness decreasing slighly, and the toughness inside the material increasing.

This leads to an exceptionally high notched bar impact strength and a high resistance to brittle fracture.

Heat-treatable steels are often alloyed with Si, Mn, Cr, V and Ni.

This process is applicable for heat-treatable steels of 0,2% to 0,6% C.

Stress–Relieving Anneal

Finally, the stress is relieved with temperatures of about 10 to 20° C below the tempering temperature, to further improve the material properties.

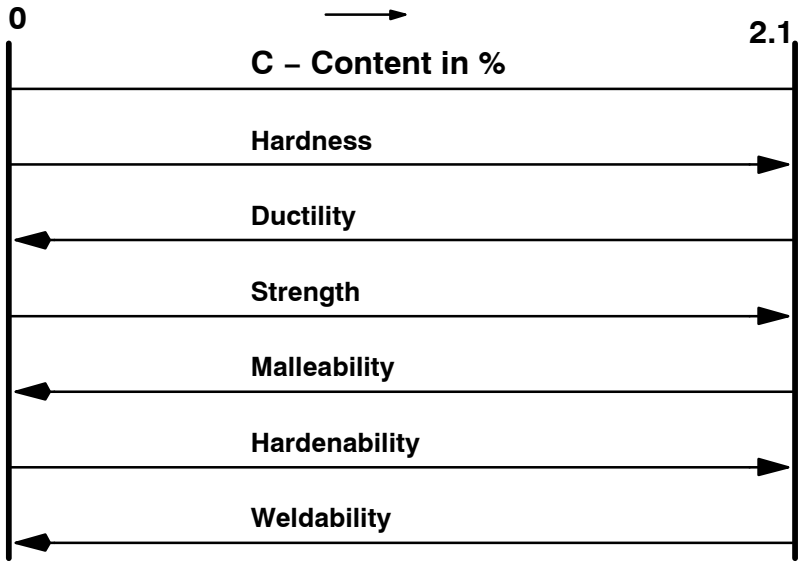

Changes in the Steel Properties

FOR TRAINING PURPOSES ONLY!

© Lufthansa Technical Training

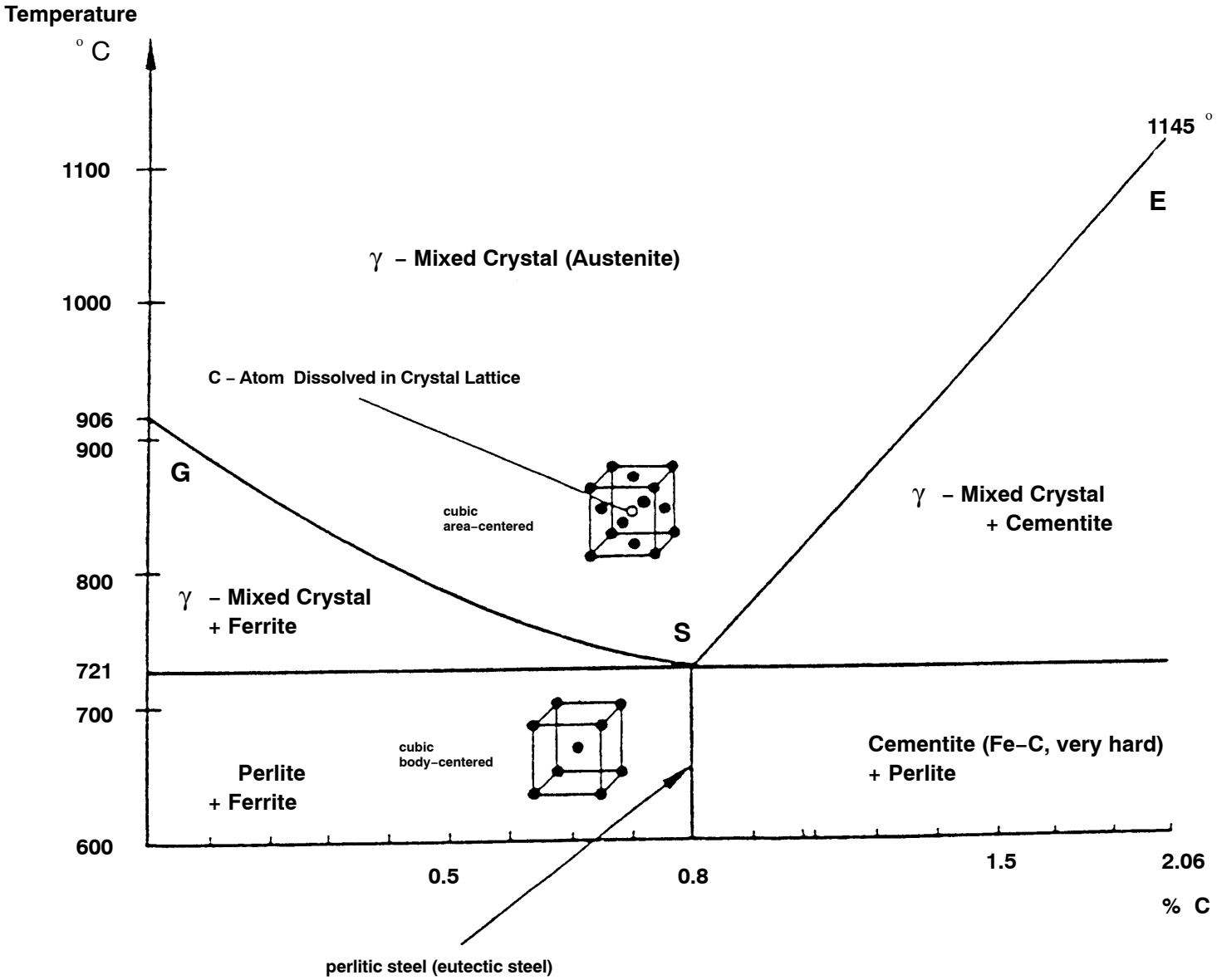

Figure 18 Fe–C–Diagram

FOR TRAINING PURPOSES ONLY!

© Lufthansa Technical Training

STEEL ALLOYS AND THEIR HEAT TREATMENT (CONTD.)

Surface Hardening

- Case hardening
- Gas carburizing/nitriding
- Burning-off
- Surface hardening of high-carbon steels
- Coating in a vacuum, e.g with titanium nitride (shining like gold) by CVD (chemical vapor deposition)

  Very wear-resistant coating **without** distortion of the component and further treatment.
- High-pressure gas quenching, e.g with nitrogen, argon or hydrogen.
- Grind-hardening

  The heat required for the hardening of the metal is brought into the workpiece without high energy expenditure, by means of friction in a modified grinding process.

Heat-treated steels may never be welded or heat-straightend, or their structure will reshape.

Soft Annealing

Applicable for steel components, which are hardened and have to be softened for mechanical processing.

Annealing temperatures are identical with solution annealing temperatures, so that the hardness structure (e.g. martensite) decomposes into austenite.

The steel may not be quenched when in soft annealing temperature, but must be cooled down in slow steps in the furnace.

NOTE: Unwanted soft annealing can be the result of component overheating, e.g. due to fire, high frictional heat during breaking, or due to a lack of lubricant.

Normalizing and Stress Relief Annealing

These processes are applied e.g. after the production process, on weld pieces, forged parts, and pressed parts, but are also used on profiles, tubes and castings, before they are subjected to chip removing machining.

Both processes serve for structure refinement and releasing internal stresses in the component.

FOR TRAINING PURPOSES ONLY!

© Lufthansa Technical Training

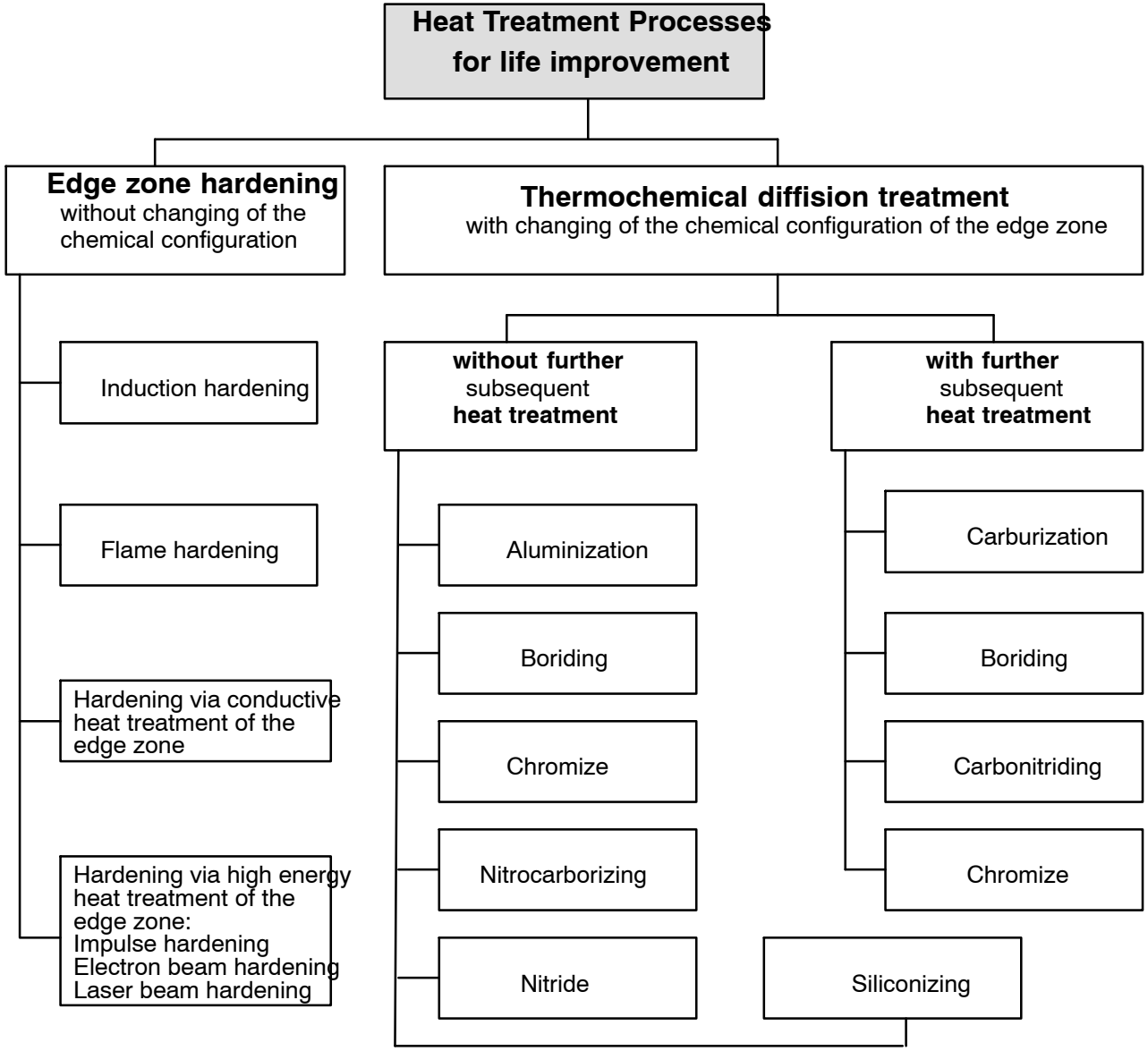

Figure 19 Overview Heat Treatment Processes

FOR TRAINING PURPOSES ONLY!

© Lufthansa Technical Training

CORROSION-RESISTANT STEEL (CONTD.)

Austenitic

The austenitic steels are chromium (Cr)–nickel (Ni) and chromium–nickel-manganese alloys. They can be hardened only by cold-working, and heat treatment only anneals them. They are non-magnetic in the annealed condition, although some may be slightly magnetic after cold-working.

Austenitic steels are formed by heating the steel mixture above the critical range and holding to form a structure called austenite. A controlled period of partial cooling is allowed, followed by a rapid quench just above the critical range.

They contain 18% or more chromium and 3.5-22% nickel. 321 and 347 stainless steels contain titanium and columbium respectively as stabilizing alloys to reduce the susceptibility to intergranular corrosion resulting from heat sensitization. Low carbon content also reduces the susceptibility to sensitization. These alloys are non heat treatable.

Limited usage in the aircraft industry. Can be used in maritime applications and is resistant to most corrosives and sea-water.

Ferritic

Ferritic steels contain no carbon; they do not respond to heat treatment. They contain a substantial amount of chromium and many have a small amount of aluminium. They are always magnetic.

They contain 15-30% chromium, no nickel and are not heat-treatable. They have a relatively low strength and are annealed. Typical usage on the aircraft is limited to piping and tubing. They have excellent corrosion resistance.

Martensitic

Martensitic steels are straight chromium alloys that harden intensely if they are allowed to cool rapidly from high temperatures. They differ from the two preceding groups because they can be hardened by heat treatment.

They contain 12-18% chromium and no nickel and are heat-treatable by quench and temper. The maximum tensile strength attainable ranges from 230 to 285 ksi. These steel alloys are used in turbine blades applications.

They have the lowest corrosion resistance of the stainless steels because of their relatively low chromium contents and no nickel. They should be used in mild environments only. They will rust in moderate to severe corrosion conditions.

Advantages/Disadvantages

Athough stainless steels have many advantages, there are certain disadvantages that must be faced by the fabricator and designer.

- They are more difficult to cut and form than many materials
- They have a much greater expansion coefficient than other steels, and they conduct heat at a lower rate, making welding more difficult. In welding CRES, inert–gas arc welding is preferred, because this process causes less deformation due to heat expansion of the metal and it prevents oxidization.
- Many of the stainless steels lose their corrosion resistance under high temperatures.
- Because of its toughness, stainless steel is more difficult to cut, form, shear, machine or drill than ordinary steel. For this reason, the technician who is to work with this material successfully must be experienced in the necessary processes or must be directed by an experienced technician.

FOR TRAINING PURPOSES ONLY!

© Lufthansa Technical Training

THIS PAGE INTENTIONALLY LEFT BLANK

FOR TRAINING PURPOSES ONLY!

© Lufthansa Technical Training

Surface Protection

Protective Treatments Stainless Steel

Stainless steels do not normally require any protective treatment. Only when in contact with lightweight alloys are stainless steels treated as follows:

- Cadmium plating,
- zinc spraying,
- or chromate passivating, to avoid galvanic corrosion (surrounding structure).

Protective Treatment Non-Stainless Steel

Non−stainless steels receive the following protective treatments:

- Paint finish: Epoxy Primer plus Top Coat,
- Cadmium plating, if necessary plus a paint finish,
- Phosphating, if necessary plus a paint finish,
- Aluminium spraying,
- Hard chromium plating,
- Chemical nickel plating,
- Silver plating (not in contact with aluminium).

CAUTION: WHEN SURFACE PROTECTION IS DONE IT HAS TO BE ENSURED THAT NO HYDROGEN EMMITING SUBSTANCES ARE USED (E.G. PHOSPHOR ACID PRIMER LIKE WASH-PRIMER OR SEALANTS LIKE VINEGAR SEALER).

FOR TRAINING PURPOSES ONLY!

© Lufthansa Technical Training

Coating/Plating Properties	Cd	Cr	Ni gal.	Ni chem.	CAA	Paint finish
Wear-resistance		X		X	X	
Sliding ability	X					
Corrosion resistance	X	X	X	X	X	X
Hot-gas corrosion resistance		X				
Solderability	X		X	X		
Oil retention capacity		X				
Repair/Maintenance	X (Tampon-Method)	(X) Flash Chromeplating		X		X

FOR TRAINING PURPOSES ONLY!

© Lufthansa Technical Training

TESTING OF FERROUS MATERIALS

Hardness Testing

General

Hardness testing is a method of determining the results of heat treatment as well as the state of a metal prior to heat treatment.

Since hardness values can be tied in with tensile strength values and, in part, with wear resistance, hardness tests are an invaluable check of heat–treatment control and of material properties.

Practically all hardness testing equipments now in service use the resistance to penetration to measure the hardness.

The Brinell and the Rockwell hardness tests are the commonly used test methods.

Comparison of hardness (according to Moh)

Early attempts to evaluate the surface hardness of materials by Edward Moh led to the adoption of Moh's Scale. This consists of a list of materials arranged in order of hardness.

The diamond, as the hardest of all (with a hardness index of 10) is located at the head of the list and talc (with an index of 1) at the foot.

Any material in the list would scratch any substance below it, and in this way the hardness of any 'unknown' substance could be related to the scale by finding which substance would or would not scratch it and a hardness index assigned to it.

Material	Hardness index
diamond	10
sapphire	9
topaz	8
quartz	7
feldspar	6
apatite	5
fluorspar	4
calcite	3
gypsum	2
talc	1

Brinell Tester

The Brinell hardness tester uses a hardened spherical ball, which is forced into the surface of the metal. The ball is 10 millimetres (0.3937inch) in diameter.

A pressure of 3,000 kilograms (6,600 pounds) is used for ferrous metals

A pressure of 500 kilograms is used for ferrous metals

Normally, the load should be applied for 30 seconds. In order to produce equilibrium, this period may be increased to 1 minute for extremely hard steels.

The load is applied by means of hydraulic pressure. The hydraulic pressure is built up by a hand pump or an electric motor, depending on the model of tester. After the test the pressure is relieved and a calibrated microscope is provided for measuring the diameter of the impression in millimetres.

After measuring the diameter of the impression the measurement is converted into the Brinell hardness number with the help of a conversion table.

FOR TRAINING PURPOSES ONLY!

© Lufthansa Technical Training

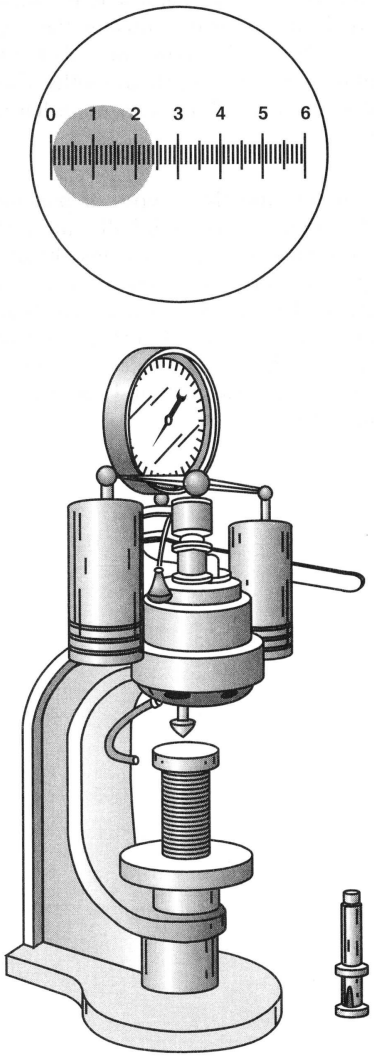

Figure 20 Brinell Hardness Tester

FOR TRAINING PURPOSES ONLY!

© Lufthansa Technical Training

Rockwell Tester

The Rockwell hardness tester measures the resistance to penetration as does the Brinell tester, but instead of measuring the diameter of the impression, the Rockwell tester measures the depth, and the hardness is indicated directly on a dial attached to the machine.

The more shallow the penetration, the higher the hardness number.

Two types of penetrators are used with the Rockwell tester:

- a diamond cone and
- a hardened steel ball.

The load that forces the penetrator into the metal is called the major load, and is measured in kilograms. The results of each penetrator and load combination are reported on separate scales, designated by letters.

The penetrator, the major load, and the scale vary with the kind of metal being tested.

C-Scale Testing

The C−scale set−up is used for testing metals ranging in hardness from C−20 to the hardest steel (usually about C−70).

For hardened steels the diamond penetrator is used and the major load is 150 kilograms. The hardness can then be read on the C-Scale (Hardness Rockwell C; **HRC**).

B-Scale Testing

If the metal is softer than C−20, the B−scale set−up is used. With this set−up the 1/16−inch ball is used as a penetrator with a major load of 100 kilograms. After testing the hardness can be read on the B-Scale (Hardness Rockwell B; **HRB**).

Before the major load is applied, the test specimen must be securely locked in place to prevent slipping and to properly seat the anvil and penetrator.

To do this, a load of 10 kilograms is applied before the lever is tripped. This preliminary load is called the ”minor load.” The minor load is 10 kilograms regardless of the scale set−up. When the machine is set up properly, it automatically applies the 10−kilogram load.

The metal to be tested in the Rockwell tester must be ground smooth on two opposite sides and be free of scratches and foreign matter. The surface should be perpendicular to the axis of penetration, and the two opposite ground surfaces should be parallel.

FOR TRAINING PURPOSES ONLY!

© Lufthansa Technical Training

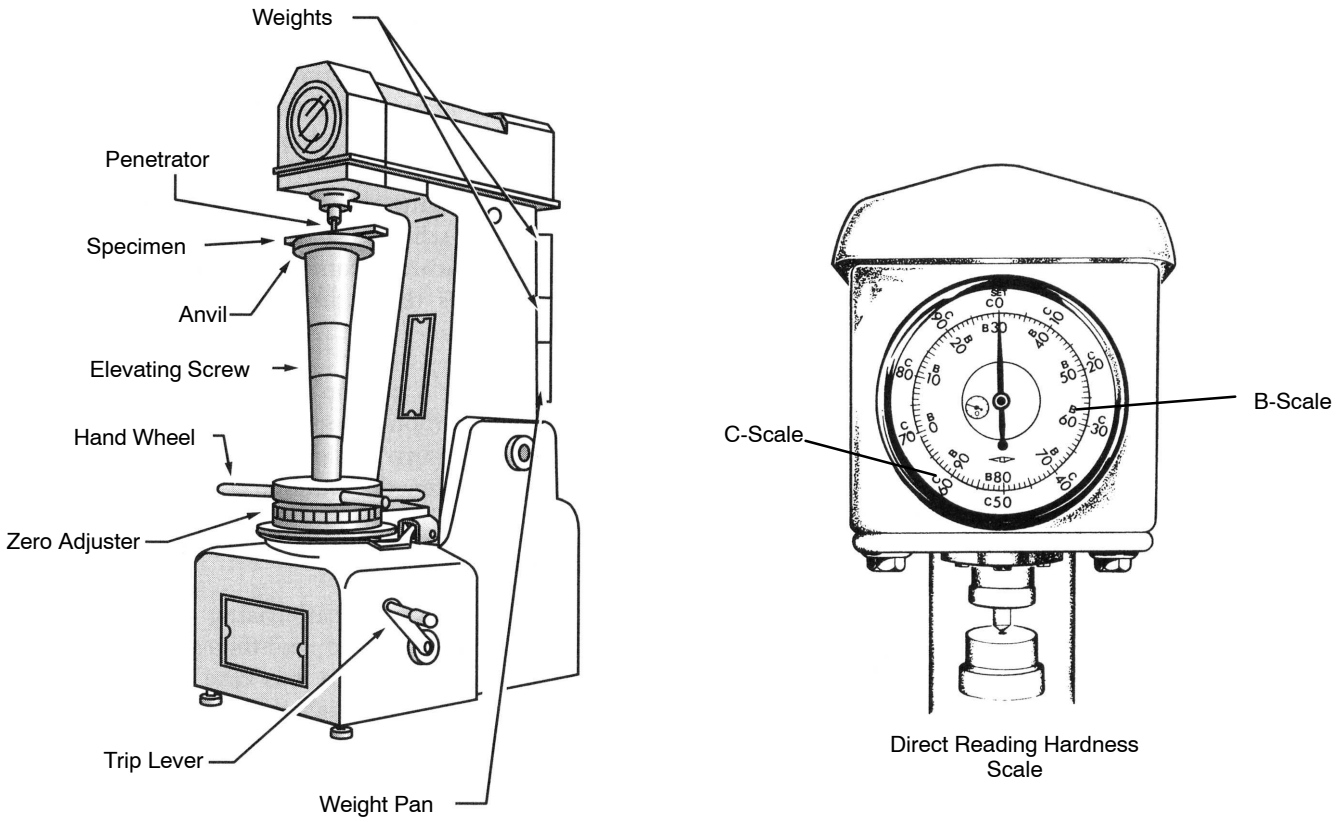

Figure 21 Rockwell Hardness Tester

FOR TRAINING PURPOSES ONLY!

© Lufthansa Technical Training

Riehle Tester

The Riehle hardness tester is a portable unit and is comparable to a bench-type Rockwell tester in its application.

The instrument is quite universal in its application, being readily adjustable to a wide range of sizes and shapes that would be difficult, or impossible, to test on a bench−type tester.

Each Riehle tester is supplied with a diamond penetrator and a 1/16−inch ball penetrator. The ball penetrator should not be used on materials harder than B−100 nor on a load heavier than 100 kilograms. When the expected hardness of a material is completely unknown to the operator, it is advisable to take a preliminary reading on the A scale as a guide in selecting the proper scale to be used.

Testing Procedure

The basic procedures for making a test with the Riehle tester are as follows:

1. Apply a minor load of 10 kilograms
2. Set the penetration indicator to zero
3. Apply a major load of 60, 100, or 150 kilograms (depending on the scale), and then reduce the load back to the initial 10−kilogram load
4. Read the hardness directly on the penetration indicator.

The hardness reading is based on the measurement of the additional increment of penetration produced by applying a major load after an initial penetration has been produced by the minor load. In reporting a hardness number, the number must be prefixed by the letter indicating the scale on which the reading was obtained.

Barcol Tester

The Barcol hardness tester is a portable unit designed for testing aluminium alloys, copper, brass and other relatively soft materials. Approximate range of the tester is 25 to 100 Brinell.

The unit can be used in any position and in any space that will allow for the operator's hand. The hardness is indicated on a dial conveniently divided in 100 graduations.

Ernst Tester

The Ernst tester is a small versatile tool that requires access to only one side of the material being tested. There are two models of the tester; one for testing hardened steels and hard alloys and one for testing unhardened steels and most nonferrous metals.

It has a diamond point penetrator, and it is read directly from the Rockwell A or B or the Brinell scales, depending on the model used.

The hardness value is given at the point where the fluid column has stopped moving on the scale. As with other portable testers of similar type, the material must be smooth and backed up so there will be no tendency to sag under the load applied on the tester.

FOR TRAINING PURPOSES ONLY!

© Lufthansa Technical Training

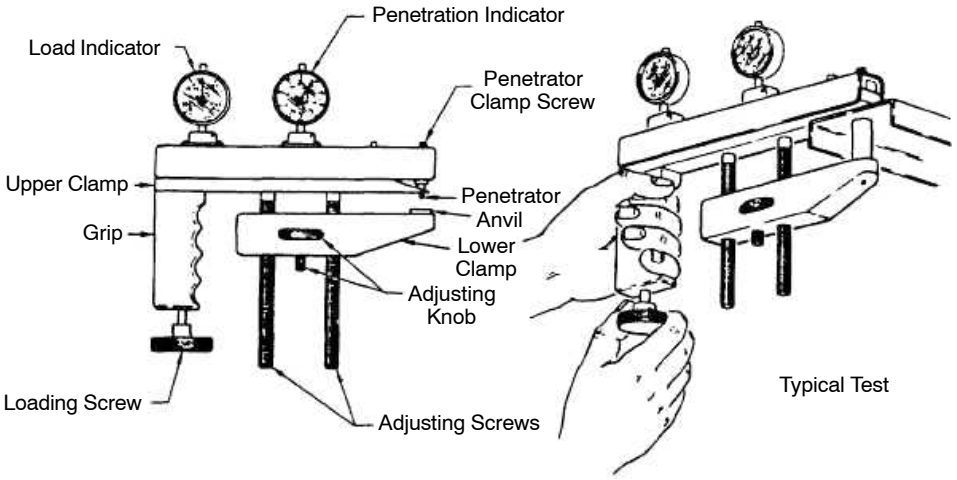

Riehle Tester



Ernst Tester

Figure 22 Riehle and Ernst Tester

FOR TRAINING PURPOSES ONLY!

© Lufthansa Technical Training

Vickers Hardness

Vickers hardness is determined similarly to Brinell hardness.

It is measured by forcing an indenter into the surface of the sample. It differs in that it uses a 136° square pyramid indenter, which produces a square indentation in the specimen, rather than a spherical or conical indenter, which Rockwell and Brinnell hardness techniques use.

The square indenter is advantageous over the round indentations as the square indentations are easier to measure than the round impressions from spherical and conical indenters.

Measuring Vickers Hardness

The Vickers hardness tester is equipped with an adjustable height stage. The test is executed with a lever or button, with all the rest of the test parameters being controlled automatically.

Indenter loads vary between 1 and 120 kg. The indentation is then measured with a microscope across the diagonals of the square indentation.

Calculating Vickers Hardness

The hardness is calculated by dividing the load by the surface area of the indentation, such that Vickers hardness is determined using the following formula:

$$H_v = (F \div A)$$

where H_v = Vickers hardness (in MPa)

F = load and

A = surface area of the impression.

Similarly, tables are often available to convert load and impression measurements to Vickers hardness values.

Advantages of the Vickers Hardness System

This test also leaves only tiny indentations that are usually not a problem for production items, making it suitable for quality control. The other advantage of the Vickers system other than the increased degree of accuracy, is that it does not have a number of different scales and indenters, as does the Rockwell and Brinnell scales.

FOR TRAINING PURPOSES ONLY!

© Lufthansa Technical Training



Vickers test-bench

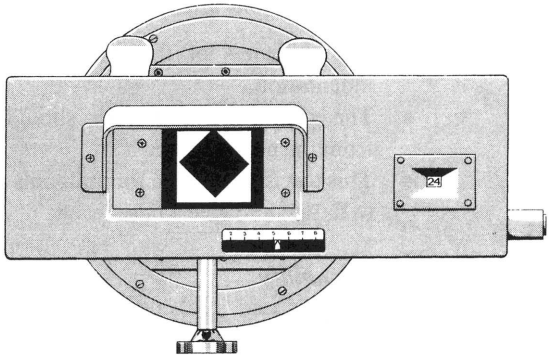

Magnified image of impression surface

Figure 23 Vickers Hardness Tester

FOR TRAINING PURPOSES ONLY!

© Lufthansa Technical Training

Impact Testing

Introduction

During the first part of the 20th century, a metallurgist named Izod invented an impact test for determining the suitability of various metals to be used as cutting tools. The test involved a pendulum with a known weight at the end of its arm swinging down and striking the specimen as it stood clamped in a vertical position.

Some years later another metallurgist named Charpy modified the test slightly by orienting the specimen in a horizontal fashion.

These pendulum impact test methods proved to be very useful, providing reliable, qualitative impact data throughout WWII up until the early 70's. It then became apparent that higher velocities and impact energies could be achieved with vertical style drop towers.

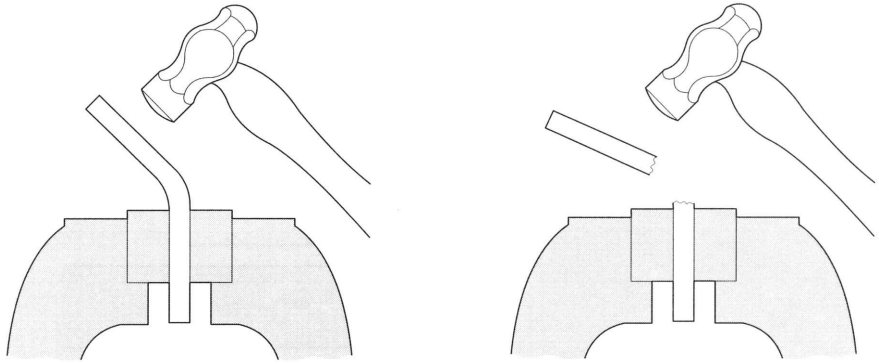

(a) (b)

Impact Loading

(a) *A piece of high-carbon steel rod (0.1%) in the annealed (soft) condition will bend when struck with a hammer - UTS 925 MPa..*

(b) *The same piece of high-carbon steel rod after hardening and lightly tempering will fracture when hit with a hammer, despite its UTS having increased to 1285 MPa.*

Charpy and Izod Testing

Despite still being used, pendulum impact testing has inherent weaknesses.

In notched Izod testing, samples are mounted in a vice fixture with the notch facing a pendulum. A weighted pendulum, fixed at a point directly above the sample vice, is swung up and held stationary. This height and thus the speed of the pendulum at impact is a constant for this test.

When released, the pendulum swings through the path where the sample is fixed. As the sample breaks, energy is absorbed by the sample. The height the pendulum attains after impact is measured by an indicator on a fixed scale which reads in joules (ft–lb). The impact strength is the loss of momentum in the pendulum while breaking the sample off at the notch.

The Izod pendulum test configuration served as the standard in impact testing in the plastics and metals industry for many years. The problems with the Izod pendulum test involve several parameters which can drastically alter the results if not strictly controlled.

First the radius of the notch is critical. It is meant to simulate conditions which might exist in applications where the features such as internal corner on an enclosure will act as a stress concentrator upon impact. In a pendulum test, the radius cannot be varied. The notch radius has a significant effect on the ability of a sample to absorb impact. Most polymers, especially polycarbonate and nylon have critical notch radii below which their impact strength falls off dramatically. In a fixed radius test, the data can give a false impression about the relative impact resistance of different polymers.

In addition, the creation of the notch in the sample has been a problem. Notch consistency has been difficult so comparison between testing labs is difficult.

A Charpy pendulum impact test is a variation of Izod. In a Charpy test, a sample is laid horizontally on two supports against an anvil. The sample is notched in the centre and the notch side is positioned away from the pendulum. When the pendulum swings through the gap in the anvil, it impacts the centre of the sample with a radiused hammer. The energy to break is measured and reported in the same way as with an Izod test.

FOR TRAINING PURPOSES ONLY!

© Lufthansa Technical Training

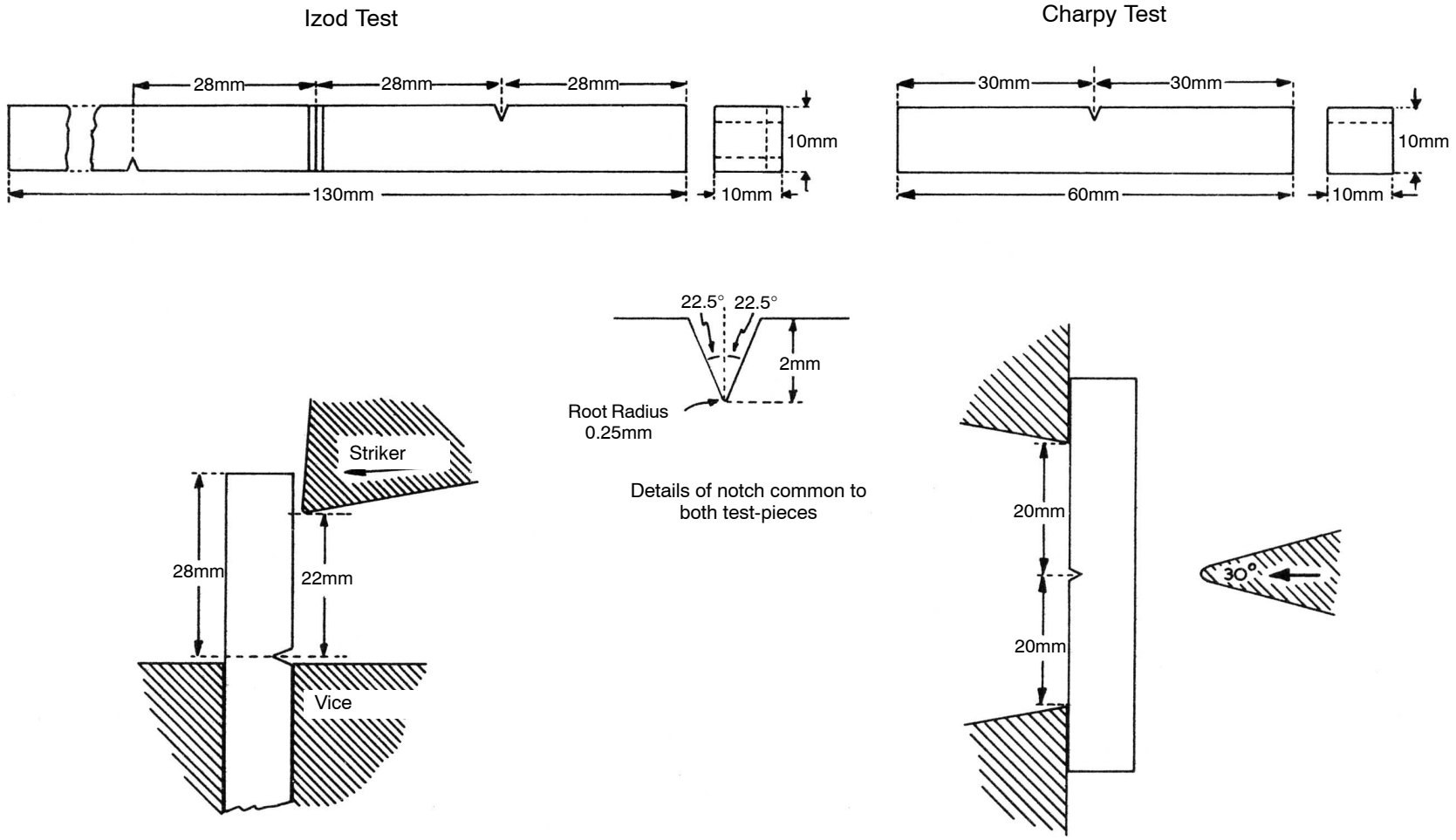

Figure 24 Standard Impact Test-Pieces

FOR TRAINING PURPOSES ONLY!

© Lufthansa Technical Training

The Avery-Denison Universal Impact-Testing Machine

This machine can be used for either Charpy or Izod impact tests. The machine can also be used for impact-tension tests.

For Izod tests, the pendulum is released from the lower position to give a striking energy of 170 J.

For Charpy tests, the pendulum is released from the upper position, to give a striking energy of 300 J.

The scale carries a set of graduations for each test.

FOR TRAINING PURPOSES ONLY!

© Lufthansa Technical Training

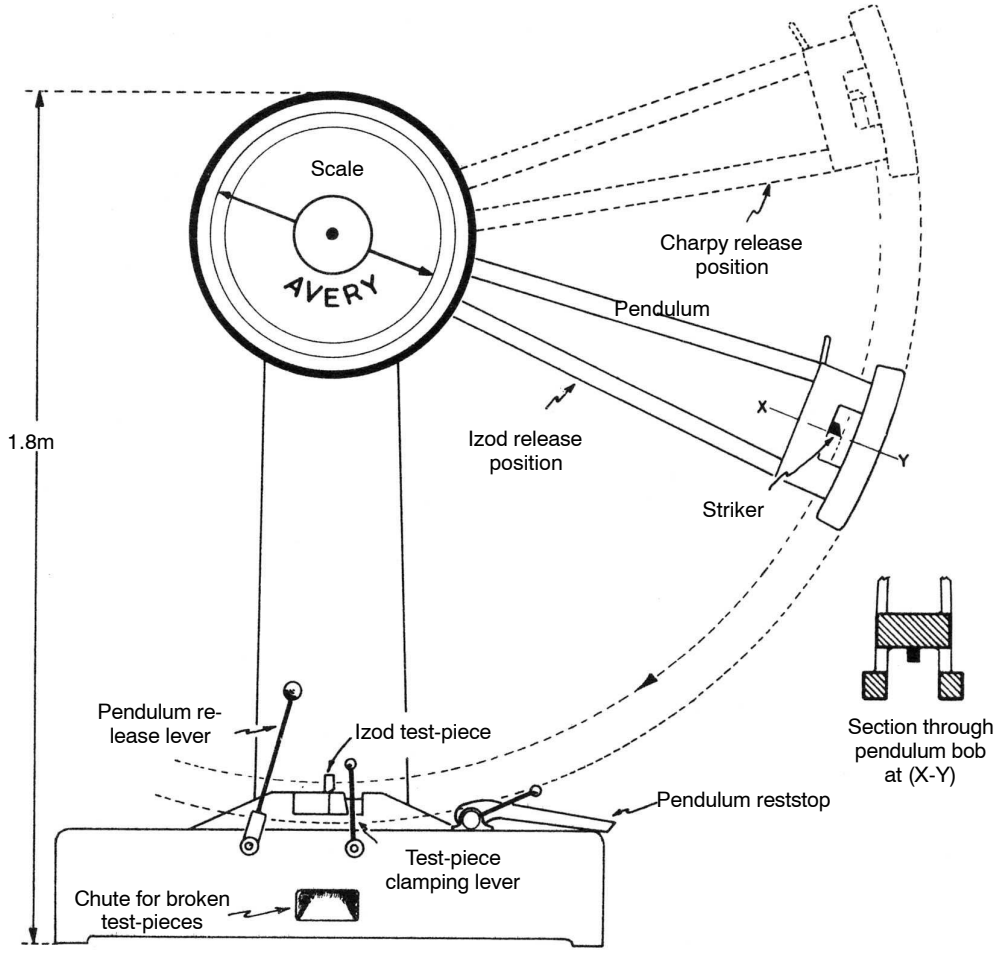

Figure 25 Avery-Denison Universal Impact-Testing Machine

FOR TRAINING PURPOSES ONLY!

© Lufthansa Technical Training

Fatigue Strength Testing

FATIGUE TEST

Introduction

In civil commercial aircraft, the main reason for structure fatigue is the number of flights, which every single aircraft is carrying out.

The fatigue behaviour of the material has been researched and can be predicted precisely, but has to be obligatory verified for the engineering and certification of aircraft with tests, to ensure an efficient and safe operation in the aircraft's service life.

FULL SCALE FATIGUE TEST

General

In a complex procedure, the aircraft is subjected to a socalled fatigue test.

As part of the test, the durability of a commercial aircraft, which generally has an appointed service life of 25 years, is verified. Secondly, the test serves to find areas in new aircraft, in which premature fatigue cracks occur, which can be prevended in real every day operation of the aircraft, by scaffolding the respective modifications.

However, these tests, which are carried out in specially made test airframes, are not able to take into account appearances such as corrosion or other damages, caused by external influences, which promote the occurance of fatigue cracks.

FOR TRAINING PURPOSES ONLY!

© Lufthansa Technical Training



Figure 26 Full Scale Fatigue Test A380

FOR TRAINING PURPOSES ONLY!

© Lufthansa Technical Training

FULL SCALE FATIGUE TEST (CONTD.)

Test Sequence

The components, systems or whole airframes integrated in a test scaffold are subjected to a special stress program, using hydraulic pumps, impression cylinders, forcers and pneumatic devices. The test scaffold simulates the entire flight characteristics, such as cabin pressure and vibrations, stretching, compression, deformation and different temperatures.

This way, an entire service life of an aircraft can be simulated in time-lapse in a relatively short time, while the results can be evaluated and analysed in intermediate breaks.

At the IABG (Industrieanlagen-Betriebsgesellschaft mbH) in Dresden, where the structure service life tests for the Airbus A380 are carried out in a hangar especially set up for this purpose, a 14 hour long haul flight, for example, is simulated in 11 minutes.

The tests include the simulation of a number of flights, which generally is 2,5 times as high as the expected life span of the respective aircraft type.

The components or whole airframes integrated into the test scaffolds are constantly updated to the newest modifications developed by the manufacturer during the test phase, and which are also integrated into the test aircraft in flight operation. This way, the tested airframe is almost identical to the current state of construction of the respective aircraft type.

FOR TRAINING PURPOSES ONLY!

© Lufthansa Technical Training



Figure 27 Full Scale Fatigue Test A380–Wing

FOR TRAINING PURPOSES ONLY!

© Lufthansa Technical Training

M6.2 AIRCRAFT MATERIALS - NON FERROUS

CHARACTERISTICS, PROPERTIES & IDENTIFICATION NON-FERROUS MATERIALS

Titanium

General

Titanium and its alloys are used widely in the aerospace industry because of its high strength, light weight, temperature resistance and corrosion resistance.

The density of titanium is approximately 56% of the density of steel, but its strength is equal to that of steel.

General Properties of Pure Titanium

- Density: 4.5 kg/dm^3
- Develops an oxide inclusion, which protects against corrosion, at temperatures from -50 to +450°C.
- Resists heat up to approx. 450°C, however, at temperatures of approx. 150°C and higher, there is a risk of embrittlement by gas diffusion, on exposure to hydrogen, oxygen, nitrogen or chlorine.
- Poor heat conductor
- Not suitable for cold-forming, cold brittleness.
- Melting temperature 1668°C.
- Tensile Strength: approx. 300–700 N/mm^2, depending on the purity level. (Titanium alloys significantly above > 1400N/mm^2.)

Advantages and Fields of Application of Titanium

Basically, titanium has the same qualities as the material CRES, but is considerably lighter.

Therefore, titanium is used primarily where, at low weight,

- high strength
- high corrosion resistance
- low thermal conductivity
- good heat resistance

are required.

Comparison of Several Properties of Titanium, CRES and Aluminium

	ALUMINIUM	CRES 18 - 8	TITANIUM
DENSITY	2,7	7,75	4,5
CORROSION RESISTANCE	low	good	very good
HEAT CONDUCTIVITY	very low	low	very low
HEAT RESISTANCE	low	good	good

Weldability

Because titanium has a high affinity to gas diffusion at higher temperatures, and therefore is prone to brittleness of the weld, titanium and titanium alloys can only be welded under inert gas/vacuum.

FOR TRAINING PURPOSES ONLY!

© Lufthansa Technical Training

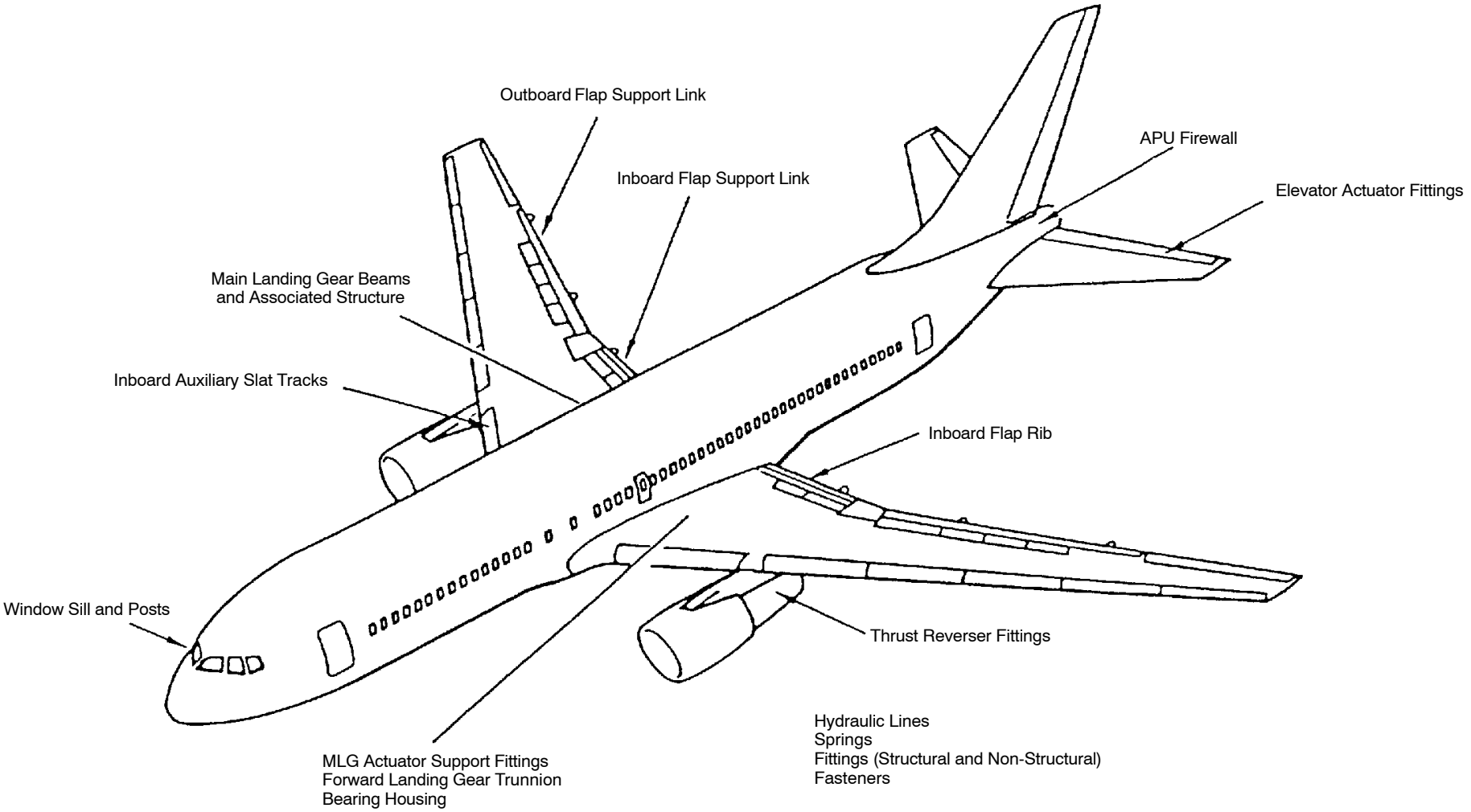

Figure 28 Application of Titanium Alloy in Aircraft Structure

FOR TRAINING PURPOSES ONLY!

© Lufthansa Technical Training

Properties of Titanium

Corrosion Resistance

One of the most outstanding properties of titanium is its resistance to corrosive substances, including some of the most troublesome industrial chemicals, at room temperature.

When titanium is exposed to different media, such as stagnant water, sea water, polluted or salty air, it remains inert, and does not disintegrate.

At room temperature, it is uniquely resistant to inorganic chloride solutions, chlorinated organic compounds, chlorine solutions and moist chlorine gas. It also has excellent resistance to oxidizing acids such as nitric or chromic acids. Strong reducing acids, however, will attack titanium.

Here, titanium oxidises, because the acid releases atoms (mostly oxygen atoms) to the reactant.

Strength

The tensile strength of pure titanium can lie between 300 and 700N/mm^{2,} depending on the respective purity level.

The strength of titanium alloys can be considerably increased. TiAl7Mo4 for example has a strength of approx. 1360N/mm^{2,} modern alloys can reach values of up to >1400N/mm$^{2.}$

Ti6Al4V is the most important titanium alloy in aircraft construction for textured sheets, mouldings (e.g. tubes, airfoil) and forged parts, and is heat treatable:

- $\sigma_{B\ soft}/R_{m:}$ 800 N/mm^2
- $\sigma_{B\ hard}/R_{m:}$ 1300 N/mm^2

	TI 99.2	Ti6Al4V tempered	2024-T4	7075-T6	CRES (hard) AMS 5519
Breaking strength (N/mm^2)	**550**	**1300**	**440**	**550**	**1300**
Yield strength (N/mm^2)	**450**	**1050**	**270**	**370**	**980**

Alloying Additions

While titanium can be alloyed with several other elements, the most common alloying element is aluminium. Other alloying elements are chrome, copper, iron, manganese, molybdenum, tin and vanadium.

Heat Resistance

When titanium is exposed to temperatures above 450°C, it must be protected from the atmosphere, because at these temperatures it combines rapidly with oxygen. The usual method of protection is to heat the metal in an atmosphere of argon or helium gas.

Contact with media which release hydrogen, such as phosphate-ester acid (Skydrol/Hyjet 4) is very dangerous for titanium, especially when heated above 150°C, because this leads to hydrogen embrittlement.

FOR TRAINING PURPOSES ONLY!

© Lufthansa Technical Training

LIST OF COMMON PURE TITANIUM AND TITANIUM ALLOYS

Material Code	German Material Number	American Material Number	AMS - No.	R_e (N/mm²)	R_m (N/mm²)	Ultimate Strain (%)
Ti 99.5	3.7024	Ti 30	-----	195	295 - 410	30
Ti 99.4	3.7034	Ti 45A, A40	4902	265	380 - 530	22
Ti 99.3	3.7054	Ti 65A, A55	4900	314	450 - 570	17
Ti 99.2	3.7064	Ti 75A, A70	4901B	432	530 - 715	16
TiMn8	-----	C11 OM	4908B	726	755	-----
TiAl5Sn2	3. 7114	A110 AT MiL-T-9046F	4910F	765	815	10
TiCu2	3.7124	-----	-----	460	540	15
TiAl6Sn2Zr4 Mo2	3.7144	MiL-T-009047F	-----	830	900	8
TiAl6Zr5	3.7154	-----	-----	850	990	6
Ti6Al4V	3.7164	C12 O AV MiL-T-9046 Type III	4911B	870	920	8
TiAl6V6Sn2	3.7174	MiL-T-9046F Type III Comp E	4918B	1000	1070	10
TiV13Cr11Al3	-----	B12 O VCA	4917B	667	-----	-----

Use of Titanium in Aircraft Construction

General

Titanium maintains its strength at temperatures of up to approx. 450°C.

This makes it possible to use titanium/titanium alloys in cooler areas of the engines, especially for blades, parts of the cowling, as well as the engine mounting.

For supersonic aircraft, titanium is used for large parts of the outer skin, because at supersonic speeds, heat of up to >100°C is generated by air friction, and therefore makes the use of aluminium impossible.

EXAMPLES OF USE OF TITANIUM

Structure

Firewall areas, air conditioning systems (hot air ducts), rivets (especially Airbus, Concorde), outer areas of airframes (e.g. Concorde) in areas of high local strain, as socalled „doublers'' (Inforcement sheets,''Crack Stopper''), fittings, forged parts and milled parts, rails for slats or trailing edge flaps. Several connecting elements: screws, bolts, rivets and special rivets.

E.g.„pure titanium“ (french designation T40) for rivets:

- before clenching it: σ_B/R_m 450 N/mm²
- after clenching it: σ_B/R_m 900 N/mm² by strain hardening.

FOR TRAINING PURPOSES ONLY!

© Lufthansa Technical Training

Engine

Entire fan area (blades, hubs, cases, stators, and rotors of the compressor). Titanium alloys are used for the compressor blades of the engine (forged parts), heat resistant up to approx. 520 °C.

Processing Methods

Components made of titanium are producible as forged blanks, rods, wire, sheets, ducts and profiles (extruded profiles).

In general, it is not castable (apart from expensive exceptions, such as the ''Tornado'' Diffusor Case).

Furthermore, titanium can be cut, drilled, countersunk, sawed, twisted, milled, ground, and welded in an inert-gas atmosphere.

FOR TRAINING PURPOSES ONLY!

© Lufthansa Technical Training

EXAMPLES OF USE OF PURE TITANIUM AND TITANIUM ALLOYS IN AIRCRAFT CONSTRUCTION

Material	Semi-finished Product	Properties	Main Usage
Ti 99.5	Sheets, welding wire	corrosion-resistant, light weight, suitable for cold forming, weldable	Noses, engine cowlings, firewalls
Ti 99.4	Sheets, rods, welding wire	like Ti 99.5, resistant to scaling up to 400° C	For turned parts which are welded, rivets
Ti 99.2	Sheets, rods	can barely be formed in the cold state, other than that, like Ti 99.5	Plating of fast flying aircraft
TiAl5Sn2	Sheets, tapes, boards, rods, forged parts	weldable	Thermally stressed noses, tanks, exhaust system, parts for compressors, diffusor case
TiCu2	Sheets, tapes, rods, forged parts	weldable	Firewalls, plating
TiAl6SnZr4Mo2	Rods, forgings		Compressor parts, engine mounting
TiAl6V6Sn2	Sheets, tapes, rods, boards, forged parts		Spars, frames, fittings, screws
Ti6Al4V	Sheets, rods, drop forgings, press profiles, screws	electrical resistance spot welding is possible, superplastically mouldable, other than that like Ti 99.5	Compressor blades, bolts and screws, up to 450°C resistant to scaling.

FOR TRAINING PURPOSES ONLY!

© Lufthansa Technical Training

Handling of Titanium

General

Titanium may be worked by many of the methods employed for steel and stainless (corrosion–resistant) steel. It can be sheared, drawn, pressed, machined, routed, sawed and nibbled.

The operator handling titanium must be familiar with its peculiarities and special characteristics in order to obtain good results. The cutting dies and shear blades used in cutting titanium must be of good quality steel and must be kept very sharp.

When titanium is being cut or ground in any appreciable quantity, it is necessary to have fire–extinguishing equipment to hand, because hot sparks from a grinding wheel can ignite an accumulation of titanium dust and swarf to produce an extremely hot fire.

WARNING: ONLY USE POWDER EXTINGUISHER WITH GLOWING FIRE POWDER, NEVER USE WATER- OR FOAM EXTINGUISHERS!

Hints for Machining Titanium

Titanium is sometimes classified as difficult to machine. In part, this can be explained by the physical properties of titanium metal.

- Titanium is a poor conductor of heat,
  - heat, generated by the cutting action, does not dissipate quickly. Therefore most of the heat is concentrated on the cutting edge and the tool face.
- Titanium has a strong alloying tendency or chemical reactivity with materials in cutting tools at tool-operating temperatures,
  - this causes galling, welding and smearing and rapid destruction of the cutting tool.
- Tendency of forming built–up edge ahead of the cutting tool,
  - which forms a high shearing angle. This causes a thin chip to contact a relatively small area on the cutting tool face and results in high bearing loads per unit area. The high bearing force, combined with the friction developed by the chip as it rushes over the bearing area, results in a great increase in heat on a very localized portion of the cutting tool.
  - Further, the combination of high bearing forces and heat produces cratering action close to the cutting edge, resulting in rapid tool breakdown.
- Titanium has a relatively strong elongation:
  - work will have a tendency to move away from the cutting tool unless heavy cuts are maintained or proper back–up is employed.

Hints for Machining Titanium (Contd.)

The basic machining properties of titanium metal cannot be altered. However, their affects can be greatly minimized by decreasing temperatures generated at the tool face and cutting edge.

Economical production techniques have been developed through application of these basic rules in machining titanium.

- Use low cutting speeds:
  - tool-tip temperatures are affected more by cutting speed than by any other single variable. A change from 20 surface feet per minute to 150 surface feet per minute with carbide tools will result in a temperature change from 800 °F (427 °C) to 1 700 °F (927 °C).

FOR TRAINING PURPOSES ONLY!

© Lufthansa Technical Training

- Maintain high feed rates:
  - temperature is not affected by feed rate so much as by speed, and the highest feed rates consistent with good machining practice should be used.
- Retain feeding:
  - never stop feeding while tool and work are In moving contact. Allowing a tool to dwell in moving action causes work hardening and promotes smearing, galling, seizing and total tool breakdown.
- Use plenty of cutting fluid:
  - coolant carries away heat, washes away swarf and reduces cutting forces.
- Use sharp tools and replace them at the first sign of wear:
  - tool wear not linear when cutting titanium and complete tool failure occurs rather quickly after a small initial amount of wear takes place.

CAUTION: AT ABOUT 1,950°F (1,065°C), TITANIUM WILL IGNITE IN THE PRESENCE OF OXYGEN AND BURN WITH AN INCANDESCENT FLAME, ITS AFFINITY FOR NITROGEN IS EVEN MORE PRONOUNCED, BECAUSE IT WILL IGNITE AT ABOUT 1,500°F (815°C) WITH NITROGEN.

Instructions for Drilling Titanium

HSS-drills are used to drill titanium, their sharpness being decisive for the drilling result (point angle: 119°-130°, relief angle: 9°).

When using hand drills, a maximum diameter of 5/32'' should be drilled in one movement. This requires the use of a slowly running machine with about 350 - 500 R/min.

Drilling „slim“ bores is very difficult, due to poor heat dissipation.

Apply high pressure to the drill, whilst keeping the chip shape and and size constant.

A lack of pressure or blunt drills lead to strain hardening of the bore, a repeated gate is very difficult.

Clattering and squeaking are the first signs of a drilling error, the drill must be replaced immediately.

If the cutting speed is too high, chippings can fuse with the bit. This leads to the tool becoming blunt early.

An acceptable bore quality can only be ensured by a sufficient application of cooling media. The use of unsuitable cooling media leads to difficulties.

Suitable cooling media for example are air and demineralized or distilled water.

Important Information

At temperatures above 300°C, the contact with PER, TRI, alcohol and cadmium–plated parts leads to embrittlement of the titanium.

NOTE: Clean titanium components only with MEK or acetone.

Note also, that unprotected titanium bolts are prone to seizing in fit bores.

FOR TRAINING PURPOSES ONLY!

© Lufthansa Technical Training

Pure Aluminium and Aluminium Alloys

PURE ALUMINIUM

General

Aluminium is three times lighter than steel but, when alloyed, can attain steel's high strength characteristics. It is also corrosion-resistant, making it hygienic and long–lasting.

One pound of aluminium has more than twice the electrical conductivity of an equal weight of copper.

Polished aluminium is highly reflective and is utilized for light and heat reflectors.

Since the chemical composition of aluminium remains unchanged during remelting, it is easily and efficiently recycled. Remelting of aluminium scrap requires only five per cent of the energy needed to produce primary aluminium.

FOR TRAINING PURPOSES ONLY!

© Lufthansa Technical Training

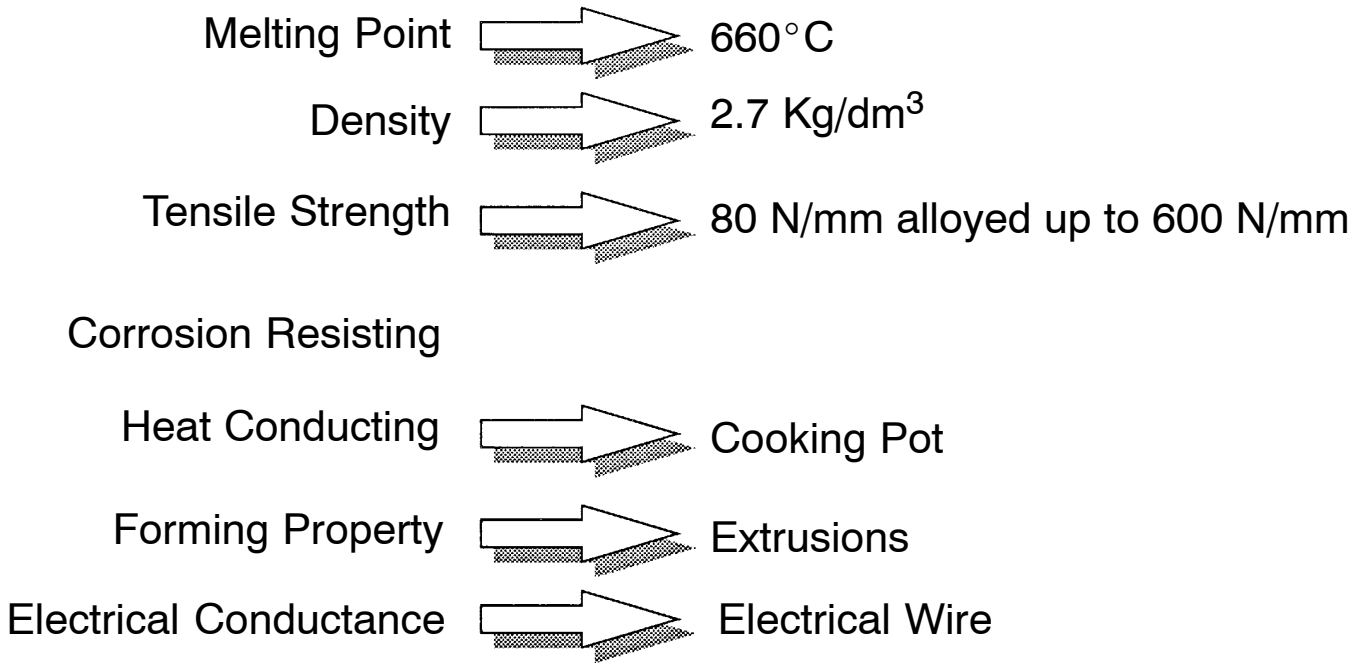

Figure 29 Properties of Aluminium

FOR TRAINING PURPOSES ONLY!

© Lufthansa Technical Training

Aluminium Alloys

General

Due to the low strength of pure (99.0%) aluminium (80 to 100 N/mm^2), it is unsuitable for aircraft structures.

However, because of its light weight (one–third the weight of steel), it is, when alloyed with other metals or elements, an ideal structural material for aircraft.

Wrought aluminum alloys are used extensively in aircraft construction, and are either non–heat–treated or heat–treated, depending on the alloy composition. Most structural aircraft parts are made of heat–treated aluminium alloys.

Alloying pure aluminium with other elements leads to the following:

5. Increased strength (σ_B = 400 – 600 N/mm^2)
6. Decreased deformability
7. Lower corrosion resistance

Alloyed aluminium can be distinguished in alloys in cast or wrought form, with regard to their processing mode or form of delivery.

Cast Aluminium Alloys

Cast alloys have good casting properties, which means that they have a good flowability in the liquid state. Cast alluminium alloys however have a grain structure that is very coarse, thus the metal is brittle. Cast aluminium is used in construction of aircraft wheel rims and engine crankcases.

There are hardenable and non-hardenable cast aluminium alloys.

Wrought Aluminium Alloys

Wrought aluminium alloys can be formed non-cutting in the cold and the warm state, which means they can be drawn, clenched, milled and forged.

When wrought aluminium alloys are milled or forged, its grain structure is compressed and hardened, which means it is subjected to plastic strain. This toughens and hardens, for example plates, rods, extrusions or skins.

There are hardenable and non-hardenable wrought aluminium alloys.

FOR TRAINING PURPOSES ONLY!

© Lufthansa Technical Training

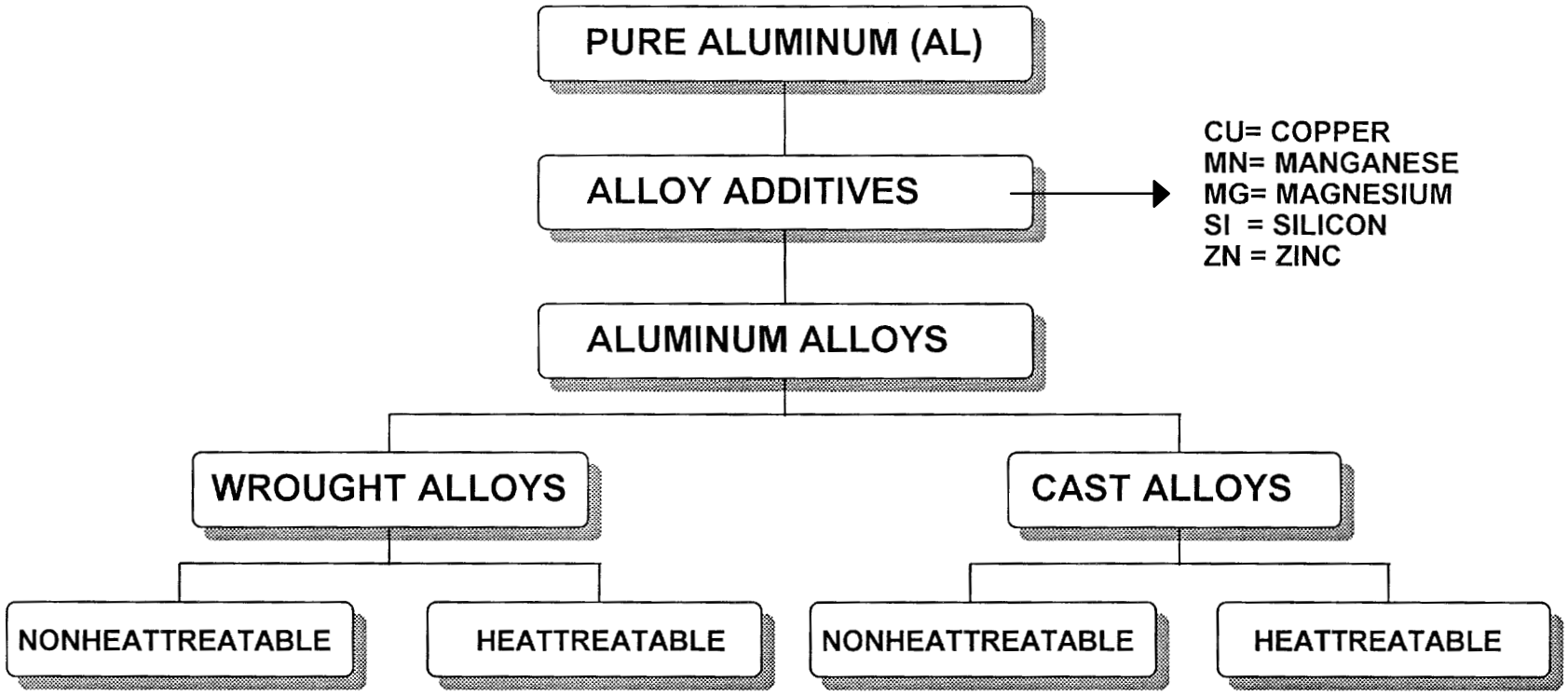

Figure 30 Aluminium Base Materials

FOR TRAINING PURPOSES ONLY!

© Lufthansa Technical Training

HARDENABLE AND NON-HARDENABLE ALUMINIUM ALLOYS

General

In addition to the classification of aluminium alloys with regard to their processing mode, (cast and wrought alloys), aluminium alloys can be distinguished with regard to a characteristic, which is important for the production:

- hardenable aluminium alloys
- non-hardenable aluminium alloys.

Non-hardenable Aluminium Alloys

Pure aluminium and the aluminium alloys AlSi, AlMn, AlMgMn as well as AlMg can not be hardened by heat treatment.

One of the features of non-hardenable aluminium alloys, compared to most hardenables, is their good to very good resistance aginst external damage. Their chemical resistance aginst weather, sea water, and a number of alkaline solutions is excellent. These alloys are also very well suitable for polishing/plating.

The strength of these alloys depends on the alloy content and can be increased by strain hardening.

The deformability by driving, drawing, canting, etc. depends on the kind, and the percentage of alloying elements and can vary greatly.

Hardenable Aluminium Alloys

These aluminium alloys are hardenable because of the existence of one or several alloying elements, which have an improved solubility at higher temperatures in the hard aluminium mixed chrystal than at room temperature.

The aim of hardening is to increase the strength.

By heating (solution annealing) these alloys to a certain temperature, and subsequent quenching, the strength is increased within a certain aging time.

The solution annealing temperature, as well as the aging temperature/time depend on the respective alloying composition.

FOR TRAINING PURPOSES ONLY!

© Lufthansa Technical Training

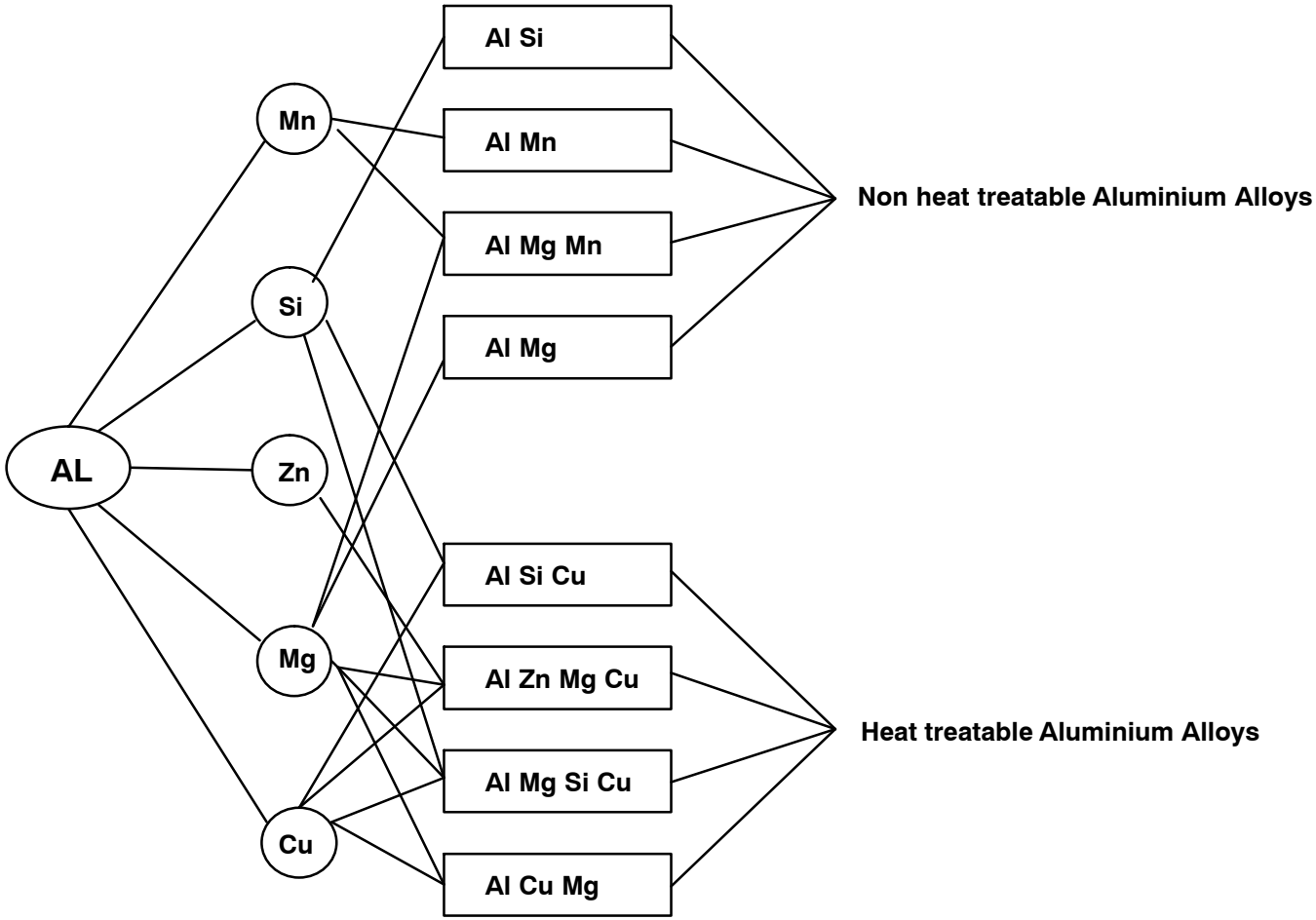

Figure 31 Aluminium–Alloys

FOR TRAINING PURPOSES ONLY!

© Lufthansa Technical Training

LIST OF COMMON ALUMINIUM MATERIALS IN AIRCRAFT CONSTRUCTION

These qualities have low strength, can only be solidified in the cold state, can easily be welded and are corrosion-resistant.		
Chemical Composition	**AA-No.**	**Examples of Use**
Al 99	1100	techn. pure material
Al 99.5	1050	Plating material
Al Mn	3003	Galleys and sanitary facilities
Al Mg 3	5052	Secondary structure
Al Mg 5	5056	Secondary structure

2000' - and 7000' - alloys are heat treatable, can not be welded, are not corrosion-resistant		
Chemical Composition	**AA-No.**	**Examples of Use**
Al Cu Mg 1	2017	Rivet material
Al Cu Mg 0.5	2117	Rivet material
Al Cu Mg Mn	2024	Textured sheets in the primary structure
Al Cu Ni Mg	2218	Forged parts
Al Cu Mg Fe Ni Ti	2618	Integral milling parts
Al Zn Mg Cu 1.5	7075	Primary structure material for sheets, pultrusion- and extrusion profiles.
Al Zn Mg Cu - base with a total of 10 alloying elements	7010	Integral milling parts (Primary structure)
Al Zn Mg Cu 0.5	7079	Similar to 2218, however the zinc content predominates
Al Zn Mg Cu 2	7178	Like 7075, more obsolete, sheet metal critical in terms of corrosion
Al Zn Mg Cu - base	7050 and 7475	New modification of the previous basic-zinc alloys 7075

The alloy 6061 is heat treatable and can be welded.		
Chemical Composition	**AA-No.**	**Examples of Use**
Al Mg Si Cu Cr	6061	Container

FOR TRAINING PURPOSES ONLY!

© Lufthansa Technical Training

THIS PAGE INTENTIONALLY LEFT BLANK

FOR TRAINING PURPOSES ONLY!

© Lufthansa Technical Training

Surface Protection

Cladding of Aluminium Alloys

Aluminium alloys are very susceptible to corrosion, because alloys do not form a closed oxide skin, which protects the material. This leads to progressive destruction of the material.

Sheets made of alloys are clad with a thin layer of pure aluminium on both sides as a means of corrosion protection.

Cladding means to permanently weld metal layers onto a basis material, whilst applying high pressure. Other than electroplated stock, clad material can be formed.

The thickness of the clad layers is about 3-5% of the material thickness. Sheets with a thickness that exceeds 6 mm are usually not cladded.

An ink print on US sheet metal that reads ALCLAD or CLAD indicates that such sheet is clad.

FOR TRAINING PURPOSES ONLY!

© Lufthansa Technical Training

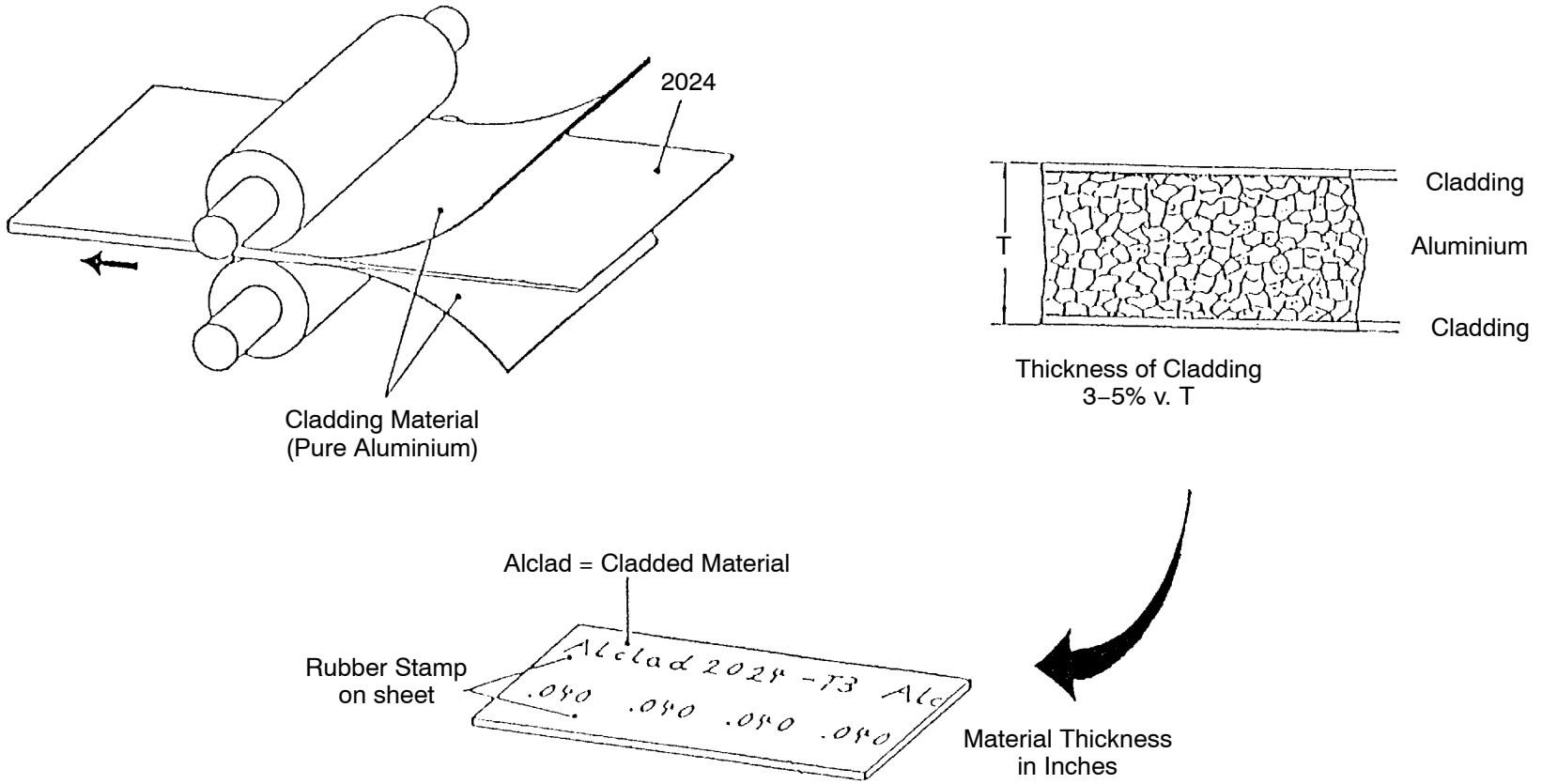

Figure 32 Cladding of Aluminium Alloys

FOR TRAINING PURPOSES ONLY!

© Lufthansa Technical Training

Standardization of Aluminium materials

American Standardization acc. to Aluminium Association of America

The „Aluminium Association of America“, short AA, uses a four–digit index system for the designation of its wrought and cast aluminium alloys.

As outlined below, the first digit indicates the alloy group according to the major alloying elements.

The second digit indicates alloy modification. If the second digit is zero, it indicates the original alloy.

The digits 1 through 9, which are assigned consecutively, indicate alloy modifications. The last two digits, used for wrought aliminium alloys, serve to identify the different alloys in the group.

For cast aluminium alloys, the fourth digit is separated from the first three digits by a point, and specifies the form of manufacture. Castings have the digit 1 behind the point (xxx.1), ingots have the digit 2 (xxx.2).

Basic Designation for Wrought and Cast Aluminium Alloys (according to AA–Numbering System)

Wrought Alloys

Alloy Number	Major Identifying Elements
1XXX	min. 99,00% aluminium
2XXX	copper
3XXX	manganese
4XXX	silicon
5XXX	magnesium
6XXX	magnesium and silicon
7XXX	zinc
8XXX	other elements
9XXX	unused series

Cast Alloys

Alloy Number	Major Identifying Elements
1XX.X	min. 99,00% aluminium
2XX.X	copper
3XX.X	silicon with added copper and/or magnesium
4XX.X	silicon
5XX.X	magnesium
6XX.X	unused series
7XX.X	zinc
8XX.X	tin
9XX.X	other elements

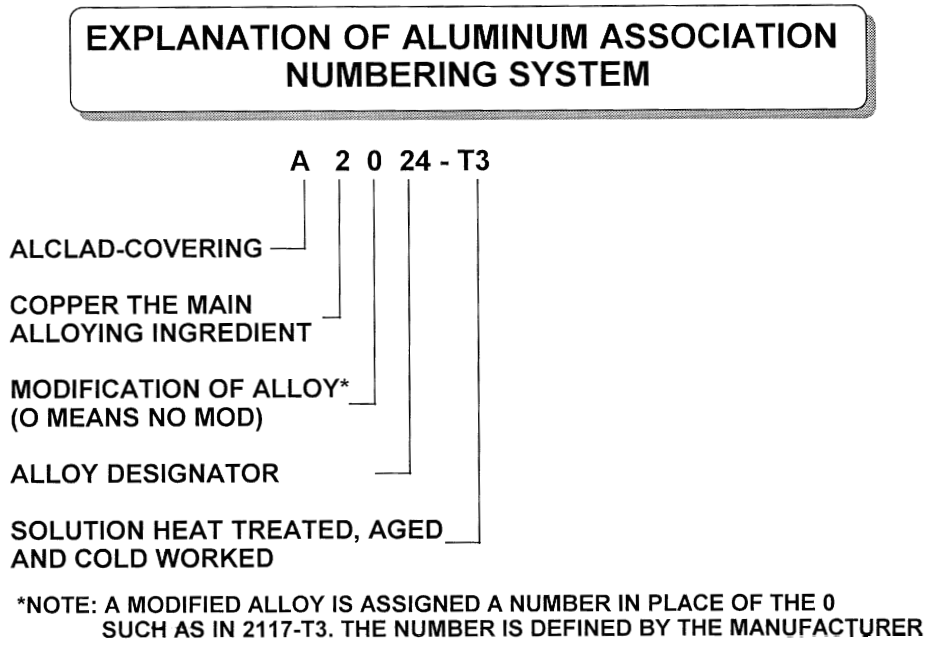

Figure 33 AA-Numbering System

FOR TRAINING PURPOSES ONLY!

© Lufthansa Technical Training

LIST OF COMMON ALUMINIUM ALLOYS AND THEIR COMPOSITIONS

Alloying Elements (%)		AA 2024	AA 2014	AA 2618	AA 7075	AA 7175	AA 7475	AA 7050	AA 7010	AA 7011
Copper	Cu	2.5 - 4.0	3.9 - 5.0	1.8 - 2.7	1.6	1.6	1.6	2.3	≤ 0.05	0.05-2.0
Zinc	Zn		≤ 0.25		5.6	5.6	5.7	6.2	5.7 - 6.7	4.0 - 5.5
Magnesium	Mg	approx. 1.5	0.2 - 0.8	1.2 - 1.8	2.5	2.5	2.2	2.2	1.0 - 1.6	1.0 - 1.6
Chrome	Cr		≤ 0.1		0.26	0.24	0.22		≤ 0.05	0.05-0.2
Nickel	Ni			0.8 - 1.4						
Zircon	Zr							0.12	0.11 - 0.17	
Manganese	Mn			≤ 0.2					≤ 0.3	0.1 - 0.3
Silicon	Si			0.15- 0.25					≤ 0.1	≤ 0.15
Titanium	Ti			≤ 0.2					≤ 0.05	≤ 0.05
Iron	Fe			0.9 - 1.4					≤ 0.15	≤ 0.2
Traces overall										≤ 0.15

FOR TRAINING PURPOSES ONLY!

© Lufthansa Technical Training

Marking of Aluminium Sheets

RUBBER STAMP INFORMATION

General

After the last rolling process of an aluminium panel, the semi-finished product manufacturer prints the required information on the type of alloy, the heat treatment condition, the material thickness and the surface protection (plating) onto the sheet surface, using a rubber stamp.

These rubber stamp information is continuously repeated in certain, constant intervals, to be able to identify the material even on cut sheet-metal parts.

Forming the Fiber

Every wrought aluminium alloy has a fiber stucture, caused by the forming process (milling, forging), because the structure grains are deformed, e.g. during milling, in the direction of grain.

The fiber orientation can hardly be seen with the naked eye. On sheet-metal plates, the direction in which the rubber stamp information is repeated, shows the direction of rolling, and therefore the direction of the fiber orientation.

Because the material is able to take larger forces in the fiber direction than transverse to the direction of the fiber, the direction of rolling is to be considered, especially in the manufacturing of components.

Considering the Fiber During Edge Bending

Edge bending should, if possible, always be carried out at right angles to the fiber orientation.

If it is edged in the direction of the fiber orientation, only few fibers are affected by the process, and are therefore greatly stretched, which increases the risk of breakage.

If it is edged at right angles to the direction of the fiber orientation, all fibers are affected by the edge bending process and are therefore stretched in an equally strong way.

As long as the minimum bending radius, which depends on the material cross-section, is considered, the material is not going to break as a result of the edge bending.

FOR TRAINING PURPOSES ONLY!

© Lufthansa Technical Training

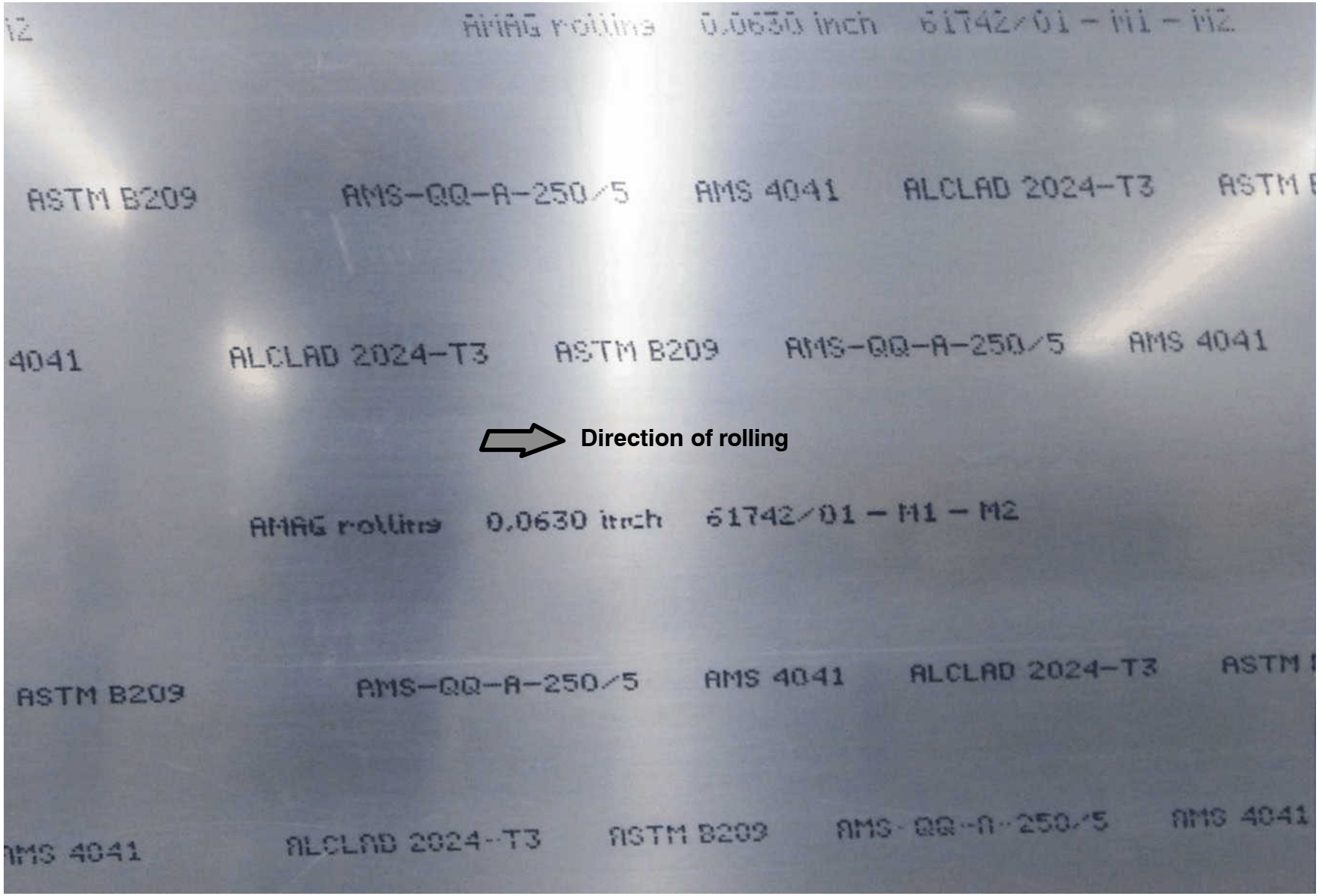

Figure 34 Rubber Stamp Information

FOR TRAINING PURPOSES ONLY!

© Lufthansa Technical Training

Heat Treatment of Aluminium Alloys

HARDENING OF ALUMINIUM ALLOYS

Introduction

The main purpose of hardening is to increase the strength of hardenable aluminium material, by a precisely specified heat treatment procedure.

Furthermore, by a specific use of the different hardening processes, the material properties, such as residual stress, tendency to stress corrosion, can be influenced.

The entire hardening procedure of aluminium alloys is always divided into three steps.

Steps of Hardening

The heat–treatment for hardening aluminium alloys is carried out in the following three steps:

8. **Solution Annealing**

   The material is heated to a specified temperature and held there for a specified time.

9. **Quenching**

   The quenching of the material is carried out in a water bath, and has to take place within a specified period of time after it has been taken out of the furnace. After quenching the material initially is soft and ductile.

10. **Natural Aging and Artificial Aging**

    Hardening of the material at room temperature (natural aging) or elevated temperature in a furnace (artificial aging).

NOTE: Because of the soft condition the material initially has only little strength. Parts may be installed into the aircraft structure only after they have reached sufficient strength.

FOR TRAINING PURPOSES ONLY!

© Lufthansa Technical Training

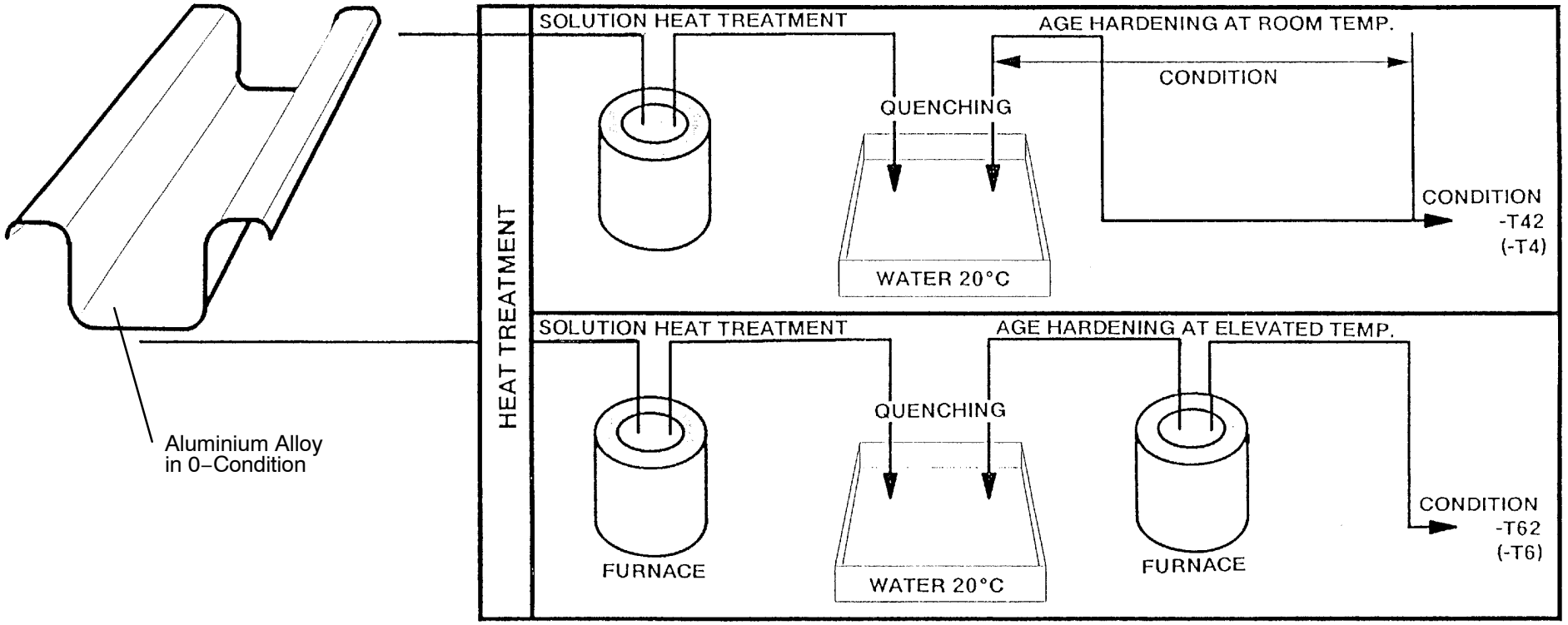

Figure 35 Methods of Heat–Treatment

FOR TRAINING PURPOSES ONLY!

© Lufthansa Technical Training

HARDENING OF ALUMINIUM ALLOYS (CONT.)

Solution Annealing

Inside a recirculating furnace or salt bath furnace, the aluminium alloy to be hardened is brought to a temperature above the solubility curve of the hardness component and is held there for a solution annealing period of time, which depends on the material thickness.

Here, the temperatures and soak time set by the manufacturer and specified in the documentation (manual) e.g. ATA 51 of the Airbus-SRM's or BAC5602 are to be complied with and held within the also specified tolerances.

At the respective solution annealing temperature, the hardness components of the alloy in the material structure turn into a „solid solution'', which means that a homogeneous mixed crystal is formed.

Quenching

The purpose of quenching is to fix the state achieved by the solution annealing.

Generally, the quenching is carried out in a water bath at temperatures of 20° to 38°C, as specified in the manufacturer's documentation.

At this, it has to be noted that the quenching has to take place within a very short period of time after the material has been taken out of the furnace.

The maximum allowed period of time is specified in the manufacturer's documentation.

Generally, the quenching has to be carried out within 5 to 15 seconds, depending on the material tickness.

After quenching the material initially is soft, this is called the instable W–state.

AGING

Aging General

During the aging process, the strength is increased by recrystallization of the foreign metal parts. At this, the foreign atoms start to wander and are forming socalled precipitations within the aluminium lattice. These lead to an increase of the strength, due to the distortion of the lattice structure. The elasticity of the material is decreasing, while strength and hardness of the material are increasing.

The aging type depends on the alloy. The material is either aged at room temperature, which is called natural aging, or at higher temperatures in a furnace, which is called artificial aging.

Natural Aging

With some alloys, the material can harden at room temperature, which is called natural aging.

The „2024'' material solidifys entirely within 3 to 8 days (after only 8 hours, 90% of the final strength is reached).

Artificial Aging

With other alloys, an increase of strength can only be achieved at higher temperatures, which is called artificial aging.

The temperature for artificial aging lies between 120 and 200°C. The material 7075 reaches its final strength after 6 – 7 h of artificial aging in the furnace.

FOR TRAINING PURPOSES ONLY!

© Lufthansa Technical Training

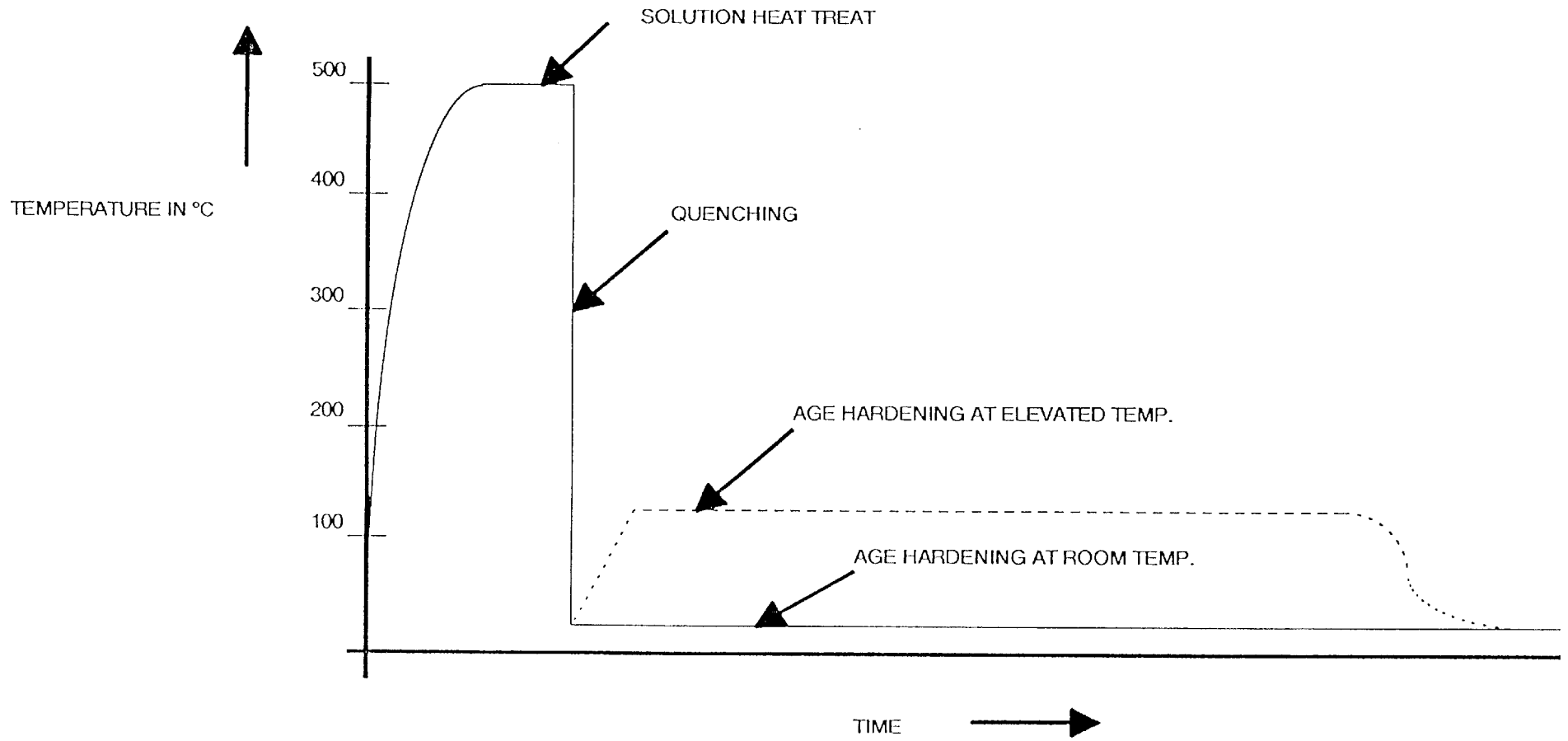

Figure 36 Temperature Schedule of Heat–Treatment

FOR TRAINING PURPOSES ONLY!

© Lufthansa Technical Training

SOFT ANNEALING

General

Soft annealing of aluminium alloys is carried out to bring the material into a state of minimum strength and hardness, whilst achieving maximum stretch.

Generally, this is done to make forming of the material easier, or at all possible.

By soft annealing, the strength achieved by aging or cold forming is entirely reversed.

The soft annealing state of the different aluminium types is called the „zero state'' (0—state), e.g. 2024—0.

Soft Annealing Temperature

The soft annealing temperature depends on the alloy and lies between 400°C and 454°C.

The respective soft annealing temperature is specified in the manufacturer's documentation, e.g. in the ATA 51 of the Airbus-SRM's or the BAC5602 and are to be complied with, and held within the also specified tolerances.

Cooling Phase

After soft annealing in the furnace, the material may not be quenched! The material has to be cooled down slowly inside the furnace, sometimes even gradually in steps, within specified sink rates.

The respective cooling method to be used again depends on the alloy: The specifications can be found in the respective manufacturer's documentation and are to be complied with.

CAUTION: SOFT ANNEALED PARTS MAY NOT BE INSTALLED IN THE AIRCRAFT, BECAUSE THE 0–STATE DOES NOT CHANGE WITHOUT A FINAL, SPECIFIC HEAT TREATMENT. THE PARTS HAVE TO BE HARDENED BEFORE INSTALLATION, AT ALL TIMES!

FOR TRAINING PURPOSES ONLY!

© Lufthansa Technical Training

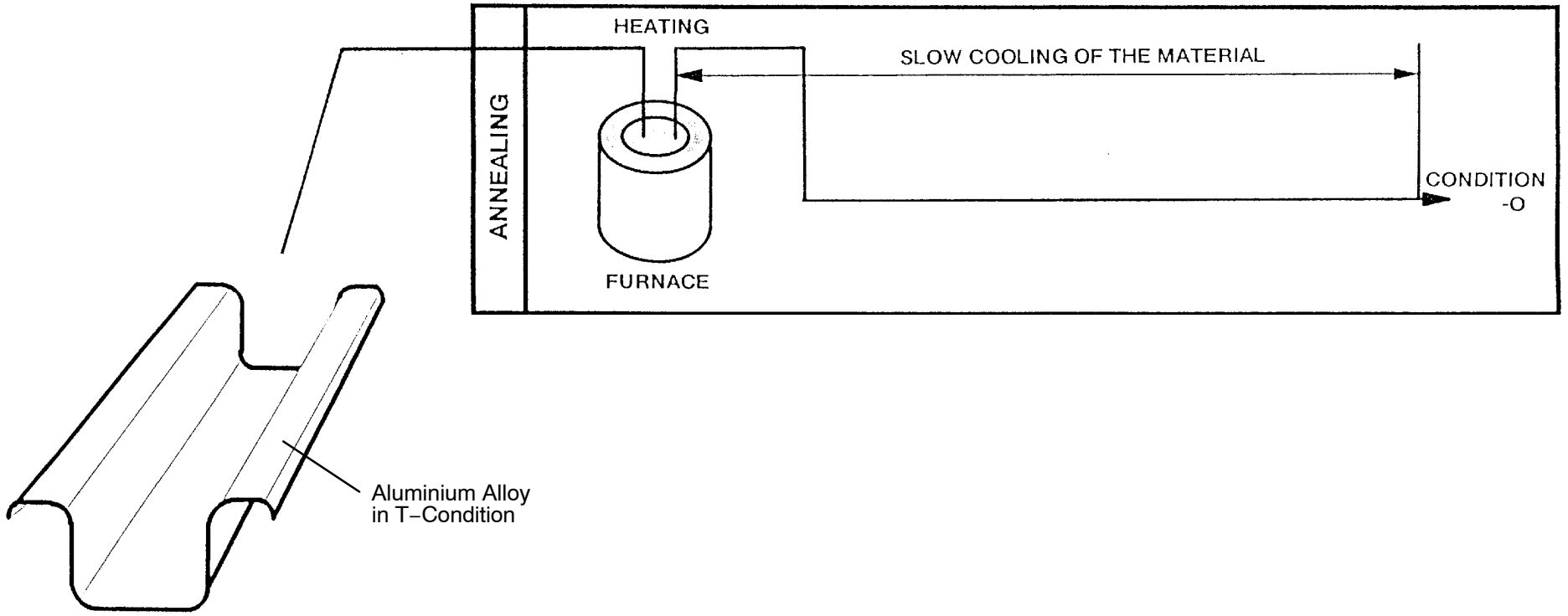

Figure 37 Soft Annealing of Aluminium Alloy

FOR TRAINING PURPOSES ONLY!

© Lufthansa Technical Training

Temper Designations

General

The temper designation system for wrought and cast aluminium alloys that are strengthened by heat–treatment employs the W and T designation described in the section below.

The W designation denoted an unstable temper, whereas the T designation denotes a stable temper other than F, O or H. The T is followed by a number from 1 to 10; each number indicates a specific sequence of basic treatments, as follows:

Basic Temper Designation

F As fabricated

O Annealed

H Strain hardened (Non heat-treatable products only)

W Solution annealed (instable intermediate state)

T Heat–treated to produce stable tempers other than F, O**,** or H

Examples of Common Materials and Their Temper Designations

The materials listed below as examples, their temper designations and explanations are materials commonly used in aircraft construction.

- 2024 - 0

  AlCuMg-alloy in a soft annealed temper, which is the 0–state
- 2024 - T3

  AlCuMg-alloy in a hardened temper, in this case: solution annealed, quenched, strain hardened and naturally aged
- 7075 - 0

  AlZnMgCu-alloy in a soft annealed temper, which is the 0–state
- 7075 - T6

  AlZnMgCu-alloy in a hardened temper, in this case: solution annealed, quenched and artificially aged.

FOR TRAINING PURPOSES ONLY!

© Lufthansa Technical Training

Heat Treatment Designation

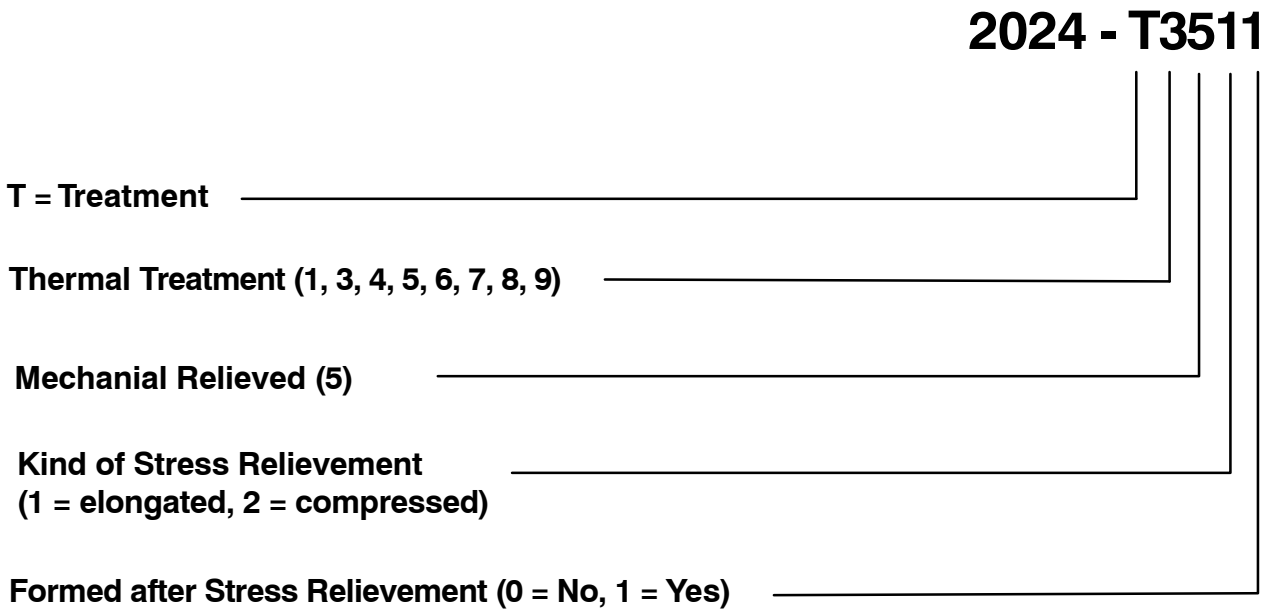

Figure 38 Example for Heat Treatment Designation

FOR TRAINING PURPOSES ONLY!

© Lufthansa Technical Training

Temper designations and Meaning

Temper Designation	Meaning
-0	Soft annealed
F	Untreated, as fabricated (rolled, pressed, as-cast state)
W	Solution annealed, quenched, instable temper (in this state not suitable for installation). Can be supplemented by a time specification (in hours) (e.g. W2)
-01	Solution annealed and cooled down slowly to room temperature.
T1	Quenched from the hot forming temperature and naturally aged to a stable final state.
T3	Solution annealed, quenched, work-hardened by straightening or stretching and naturally aged.
T31	Rivet installed, work-hardened by beating/compressing and naturally aged.
T351	Solution annealed, quenched, stress-relieved by controlled stretching degree (0,5-5%), no further straightened after stress–relieving by stretching, naturally aged.
T3510	Like T351, but not further straightened after stretching.
T352	Solution annealed, quenched, stress-relieved by 1-5% permanent compression, and naturally aged.
T36	Solution annealed, quenched, by 6% cold forming work-hardened and naturally aged.
T4	Solution annealed, quenched and naturally aged.
T42	Solution annealed from any state by the user himself, quenched and naturally aged.
T451	Solution annealed, quenched, stress-relieved by controlled stretching (0,5-5%), no further straightened after stretching, naturally aged.
T452	Solution annealed, quenched, stress-relived by controlled compression (1-5%) and naturally aged.
T5	Quenched from the elevated shaping process temperature, artificially aged to increase the mechanical values and/or the dimensional stability.
T6	Solution annealed, quenched and artificially aged (in steps).
T61	Solution annealed, quenched, and, to improve the ductility, not entirely artificially aged.
T62	Solution annealed from any state by the user himself, quenched and artificially aged (in steps).

FOR TRAINING PURPOSES ONLY!

© Lufthansa Technical Training

Temper Designation	Meaning
T651	Solution annealed, quenched, stretched (0,5-5%), no further straightened after stretching and artificially aged (in steps).
T6510	Like T651, however no further straightened after stretching.
T6511	Like T651, however further straightened after stretching.
T652	Solution annealed, quenched, stress-relieved by controlled compression, (1-5%) and artificially aged (in steps).
T654	Like T652, however compressed at the finisher.
T7	Solution annealed, quenched and overcured (artificially aged).
T73	Solution annealed, quenched and artificially aged in steps; especially resistant against stress corrosion.
T7351	Like T73, however stress-relieved by controlled stretching (0,5-5%), no further straightened after stretching.
T73510	Like T7351, however with a special stretching degree (0,5-3%) for extrusions and pipes.
T73511	Like T7350, however further straightened after stretching.
T7352	Solution annealed, quenched, stress-relieved by controlled compression (1-5%), artificially aged in steps, especially resistant aginst stress corrosion.
T74	Solution annealed, quenched and artificially aged in steps (between T73 and T76); especially resistant aginst corrosion.
T76	Solution annealed, quenched and artificially aged in steps, especially resistant against stress corrosion.
T761	Like T76, however special designation for sheets and tapes made of 7475.
T8	Solution annealed, quenched, by cold forming work-hardened and artificially aged.
T81	Solution annealed, quenched, work-hardened by approx. 1% cold forming and artificially aged.
T851	Solution annealed, quenched, stress-relieved by controlled stretching (0,5-5%), artificially aged, no further straightened after stretching.
T8510	Like T851, however with a special stretching degree (0,5-3%) for extrusions and pipes.
T8511	Like T8510, however further straightened after stretching.
T9	Solution annealed, quenched, artificially aged and cold worked.

FOR TRAINING PURPOSES ONLY!

© Lufthansa Technical Training

GLARE (GLASS ALUMINIUM REINFORCED LAMINATE)

General

The layered composite material Glare (**GL**ass **A**luminium **RE**inforced Laminate) is a member of a family of materials called Fibre Metal Laminates (FMLs). FMLs are materials consisting of thin layers of metal sheet and unidirectional fibre layers embedded in an adhesive system. Glare is an optimised FML for aircraft and consists of alternating layers of aluminium and glass fibre pregreg layers.

Production

A laminate is produced in an autoclave curing cycle. The different layers of the laminate are stacked before curing by hand lay–up, or by automated machines. Because of the layered structure of the material it is possible to tailor the material for a particular application. Both the number of layers as well as the direction of the fibre layers can be varied depending on the application of the structural part.

Up to now six standard Glare grades have been developed. The number of prepreg layers and their orientation determines the Glare grade. All grades are based on uni–directional glass fibres embedded in Cytec FM 94 structural adhesive. The thickness of the aluminium layers in the Glare laminates ranges from 0.2 to 0.5 mm.

A laminate coding system is used to comprehensively define laminates from the table above.

Example

The designation **Glare 4B–4/3–0.4.** indicates:

- Glare laminate with fibre orientation according to the Glare 4B definition in the table above
- 4 layers of aluminium, 3 fibre layers
- An aluminium layer thickness of 0.4mm.

The most important applications of Glare are: fuselage skin structures of the Airbus A380, aircraft cargo bay floors and liners, aircraft cargo explosive resistant containers.

Grade	Sub–grade	Metal sheet thickness [mm] and alloy	Prepreg orientation* in each fibre layer**	Main characteristics
Glare 1		0.3 – 0.4 7475–T761	0/0	Fatigue, strength, Yield stress
Glare 2	2A	0.2 – 0.5 2024–T3	0/0	Fatigue, strength
	2B	0.2 – 0.5 2024–T3	90/90	Fatigue, strength
Glare 3		0.2 – 0.5 2024–T3	0/90	Fatigue, impact
Glare 4	4A	0.2 – 0.5 2024–T3	0/90/0	Fatigue, strength in 90° direction
	4B	0.2 – 0.5 2024–T3	90/0/90	Fatigue, strength in 0° direction
Glare 5		0.2 – 0.5 2024–T3	0/90/90/0	Impact
Glare 6	6A	0.2 – 0.5 2024–T3	+45/–45	Shear, off–axis properties
	6B	0.2 – 0.5 2024–T3	–45/+45	Shear, off–axis properties

* All aluminium rolling directions in standard laminates are in the same orientation; the rolling direction is defined as 0°, the transverse direction is defined as 90°.

** The number of orientations in this column is equal to the number of prepregs (each about 0.125mm) in each fibre layer.

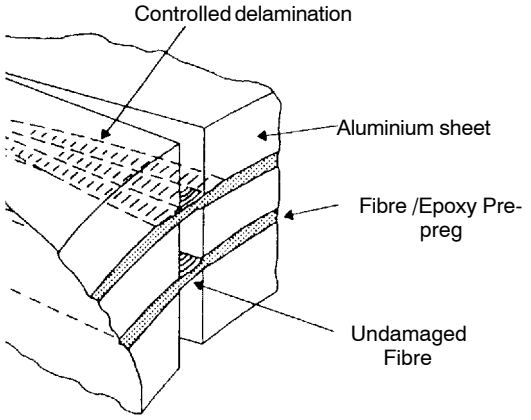

FOR TRAINING PURPOSES ONLY!

© Lufthansa Technical Training

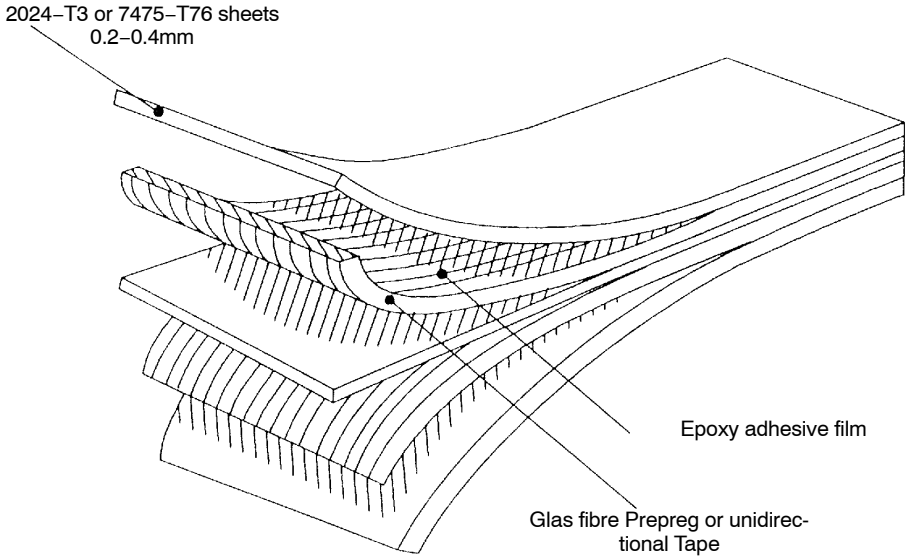

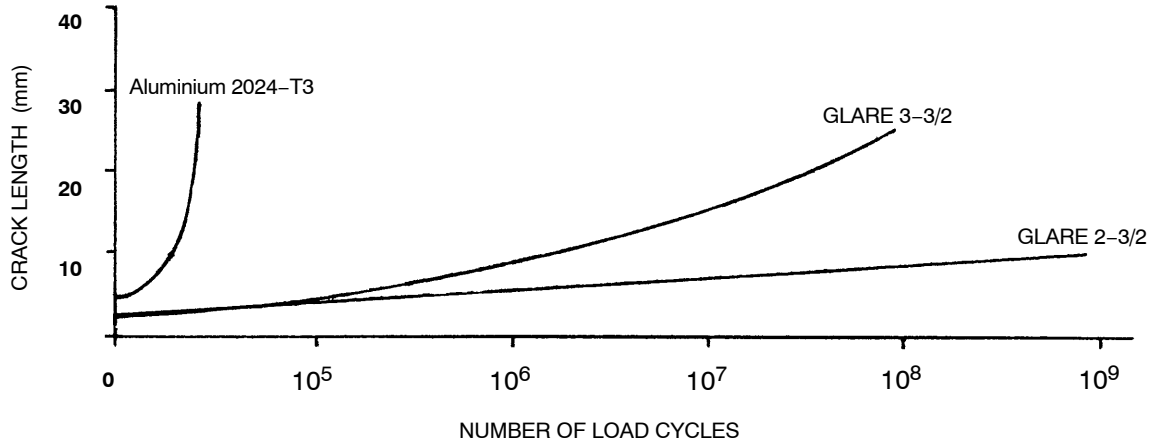

Figure 39 GLARE (GLass Aluminium REinforced Laminate)

FOR TRAINING PURPOSES ONLY!

© Lufthansa Technical Training

GLARE Properties

General

FML materials have a unique set of properties. The alternating structure of orientated fibre layers and metals ensures the potential for tailoring the material to its application.

FML has the following advantageous properties:

- high strength
- good fatigue resistance
- good damage tolerant properties
- good impact and blast properties
- good burn-through properties
- good thermal isolation.

GLARE APPLICATIONS

Currently Applications of Glare

In addition to the application of Glare as fuselage skin material for the Airbus A380, Glare is used as skin of the leading edge of the vertical and horizontal tailplane of the Airbus A380.

It is known, that Glare has good impact properties, so that Glare displays very good bird impact behaviour. In comparison to aluminium, this results in case of FOD in better protection of the (load-carrying) structure underneath the skin.

Further application opportunities of Glare

Several airlines have performed trials with flat sheet Glare 3 and Glare 5 as the cargo bay floor:

- United Airlines (B757), US Airways (B737), Qantas (B737, B747) and Midway Express (MD−80, MD-88).

After a service period of 2 years and 8 months, no through-penetrations were encountered as a result of the good impact properties of Glare.

A simple substitution of Glare 5 for standard aluminium sheets used in Boeing floors will provide significant extension of the service life of the floors, reduce maintenance costs, reduce weight and provide superior protection against flame burn−through compared to sheet aluminium. Potential damage from corrosion is also significantly reduced or eliminated.

Glare-Sandwich Constructions

Glare can be used either as sheet material or as a part of a sandwich construction as cargo bay floor or liner. In the latter case the material is bonded to honeycomb cores or specific foam cores.

FOR TRAINING PURPOSES ONLY!

© Lufthansa Technical Training

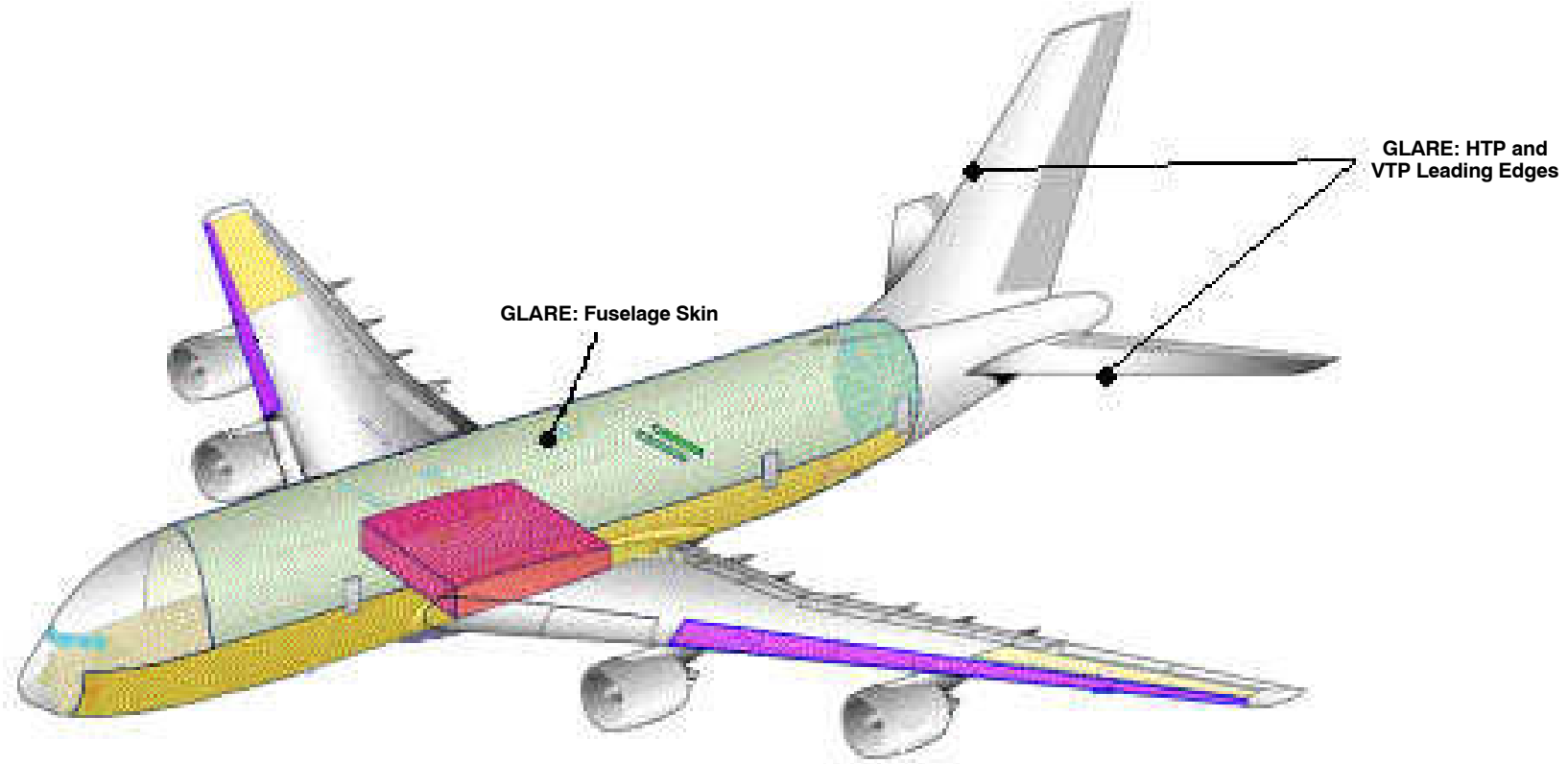

Figure 40 GLARE Application A380–800

FOR TRAINING PURPOSES ONLY!

© Lufthansa Technical Training

GLARE APPLICATIONS

Blast-Resistant Cargo Container

Glare is used to produce specialised airline cargo containers. Its high impact strength prevents severe handling damage. This results in less repairs and reduced life cycle costs.

Glare's low weight and corrosion resistance provides for additional advantages. Because of the positive strain rate effect and Glare resistance against flame penetration it is the material used in the manufacture of the only airline cargo container meeting the blast mitigation requirements of the FAA's Draft Appendix A of ISO 6517. It is the ECOS^3 Secure Luggage Container (LD−3 configuration).

ECOS3 Container

The ECOS^3 is constructed of panels of Glare, which are jointed to an aluminium frame system. FAA testing has shown that the container is able to withstand the effects of an explosion and protects the aircraft in which the container is placed.

A big advantage of the use of Glare is that the additional weight compared to a conventional container is kept to a minimum. It is only about 100 lbs heavier than a conventional LD−3 container.

FOR TRAINING PURPOSES ONLY!

© Lufthansa Technical Training



Usual Cargo Container

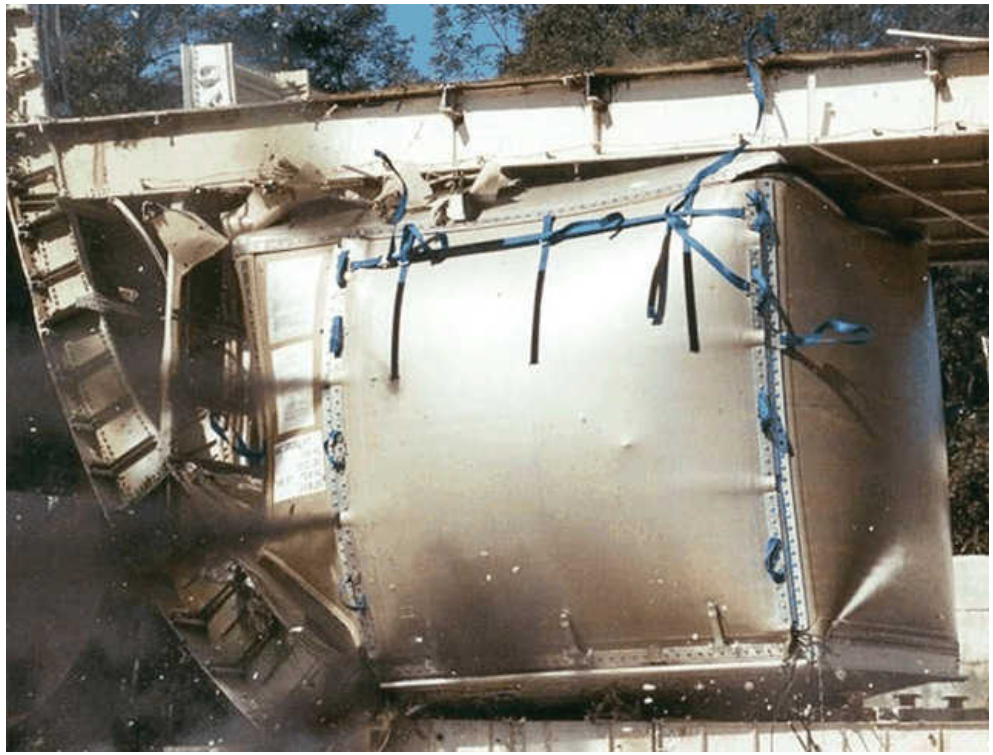

Blast-resistant Cargo Container

Figure 41 Comparsion of Blast- to Non-Blast-resistant Cargo Containers

FOR TRAINING PURPOSES ONLY!

© Lufthansa Technical Training

TESTING OF NON FERROUS MATERIALS

General

Cross Reference

Since the methods for testing of non-ferrous material are the same as the methods for testing of ferrous material, these methods are not shown a second time here.

Please refer to the paragraph for testing of ferrous material in sub-module 6.1.

FOR TRAINING PURPOSES ONLY!

© Lufthansa Technical Training

THIS PAGE INTENTIONALLY LEFT BLANK

FOR TRAINING PURPOSES ONLY!

© Lufthansa Technical Training

QFRP **Q**uartz **F**ibre **R**einforced **P**lastic, Verbund mit Quartzfasern.

M6.3 AIRCRAFT MATERIALS – COMPOSITE AND NON-METALLIC

M6.3.1 COMPOSITE AND NON-METALLIC MATERIALS OTHER THAN WOOD AND FABRIC

CHARACTERISTICS, PROPERTIES AND IDENTIFICATION OF COMPOSITE AND NON-METALLIC MATERIALS

Abbreviations

Abbreviations for Composite

AFRP	Aramid Fibre Reinforced Plastic
CFRP	Carbon Fibre Reinforced Plastic
GFRP	Glass Fibre Reinforced Plastic
QFRP	Quartz Fibre Reinforced Plastic
HOBE	Honeycomb before Expansion
MSDS	Material Safety Data Sheet
NDT	Non Destructive Testing
NTM	Non Destructive Testing Manual
Prepreg	Pre impregnated Fabric
SRM	Structural Repair Manual
MEK	Methylethylketone
RT	Room Temperature (curing)

Conversions

Fahrenheit/Celsius

Fahrenheit to Celsius Conversion

- °C = (°F - 32) x 0.555

Celsius to Fahrenheit Conversion

- °F = °C x 1.8 + 32

FOR TRAINING PURPOSES ONLY!

© Lufthansa Technical Training

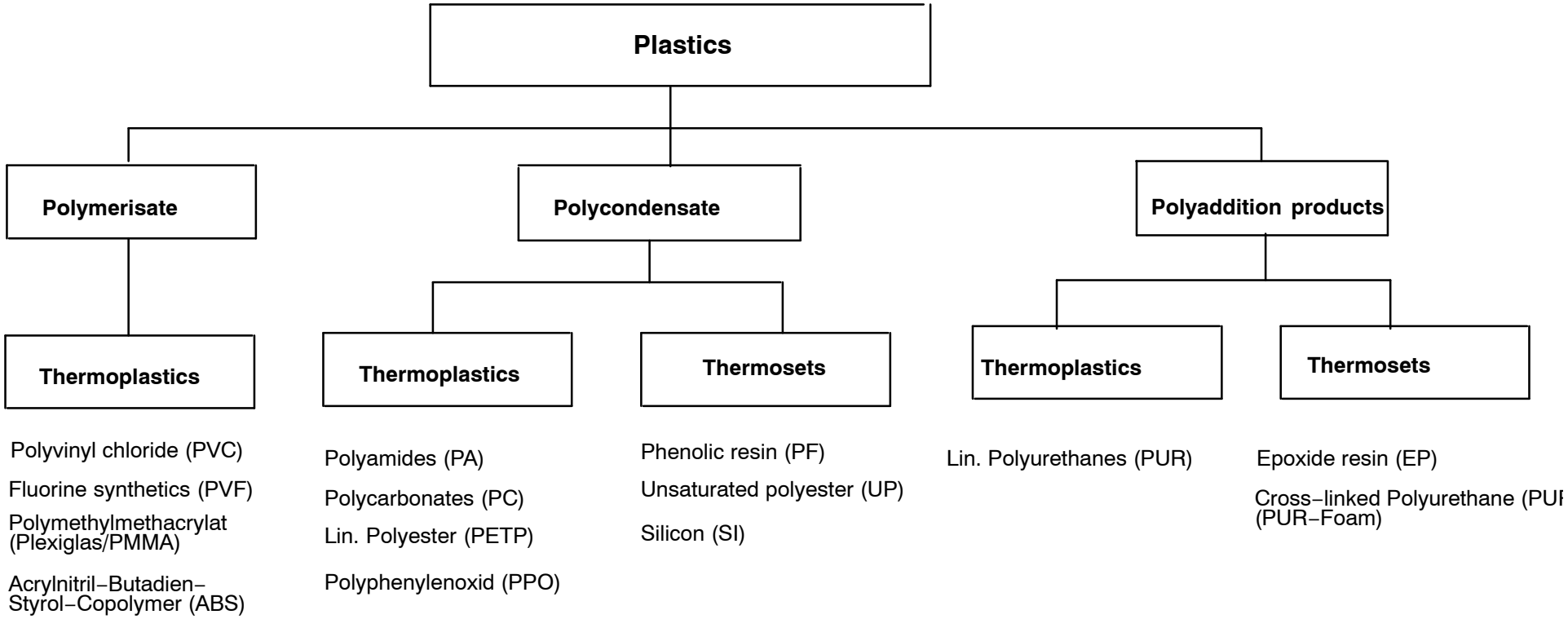

Figure 42 Overview of Plastic Materials

FOR TRAINING PURPOSES ONLY!

© Lufthansa Technical Training

Production of Plastics

Polymerisation

The polymerisation process has been generally understood since about 1930. Polymerisation is a chemical reaction, generally carried out in the presence of a catalyst, which combines small molecules (monomers), containing a double bond, into long chain molecules.

The monomer molecules may be:

- **Ethylene** polymerising to polyethylene (**PE**)
- **Styrene** polymerising to polystyrene (**PS**)
- **Vinylchloride** polymerising to polyvinyl-chlorid (**PVC**).

Different unsaturated (ie with a double bond) components can be polymerised together (copolymerised), for example:

- **Styrene/acrylonitrile** copolymer (**SAN**)
- **Acrylonitrile/butadiene/styrene** copolymer (**ABS**).

Polymerisation (''Multiplication'') in case of ethylene happens in the following way:

In the production process in an autoclave ethylene gas is fed with energy in form of pressure and heat. During the production process the double-bonds are “activated“, that means they are broken up. The free “arms“ of an activated molecule are searching immediately a reaction partner and are finding that in the also “activated“ arms of an near by molecule.

The activated molecules are not enduring. The open, reactive double-bonds are connecting at once, like it has been shown in the simple example of the ethylen-polymerisation and are therefore building large macro-molecules.

FOR TRAINING PURPOSES ONLY!

© Lufthansa Technical Training

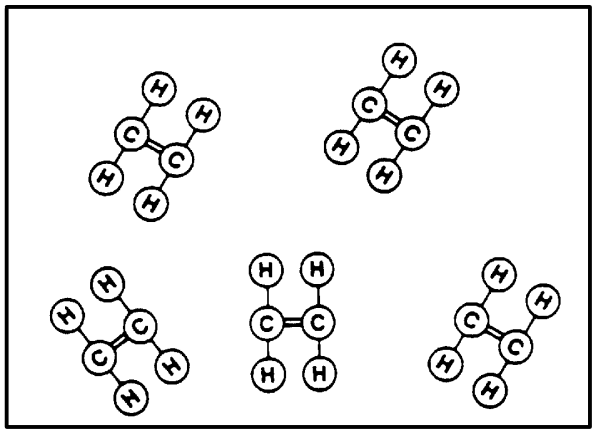

Monomeric ethylen

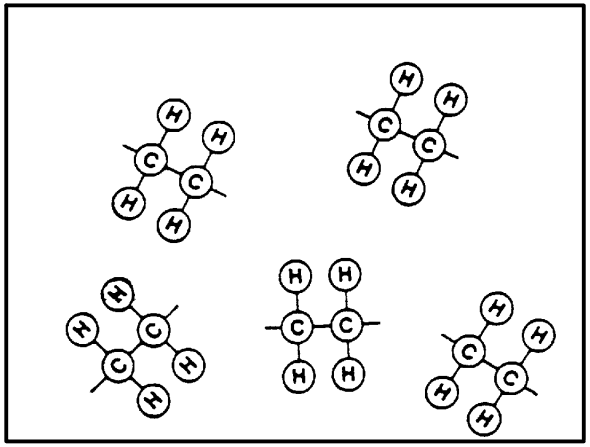

All molecules are reactive

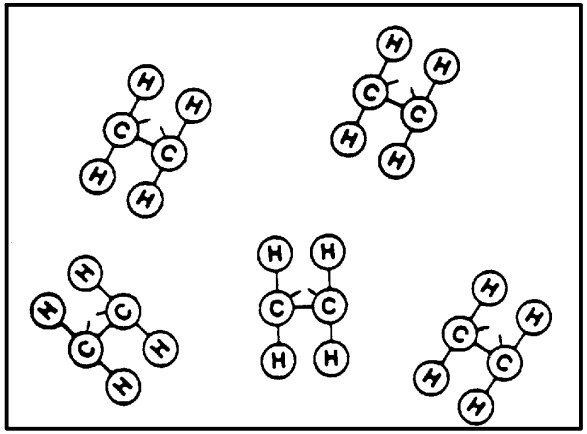

Double–bonds are opening

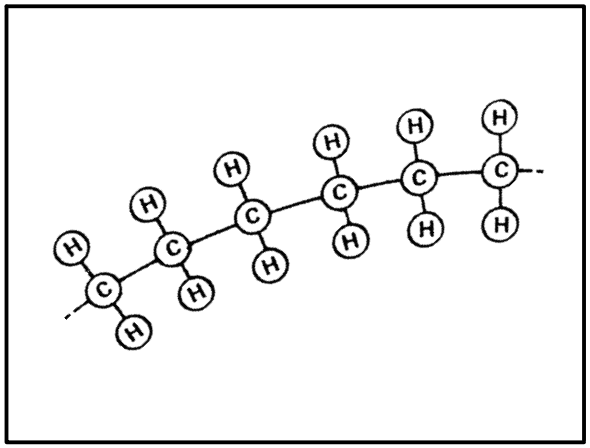

A macro molecule has been generated „Polyethylene“

Figure 43 Polymerisation

FOR TRAINING PURPOSES ONLY!

© Lufthansa Technical Training

Polycondensation

Polycondensation

Polycondensation was used and partly understood even earlier than 1930. The most famous product was Bakelite, so named by Baekeland, the Belgian chemist, who made it commercially soon after 1910.

Polycondensation is a chemical reaction between two similar or dissimilar basic units which have at least two functional groups. It gives rise to the elimination of small, low-molecular-weight by-products such as water, hydrochloric acid, etc.

The most important commercial polymers are made in this way, for example:

- **Phenol–formaldehyde** (Bakelite) – **Resins** (typical thermosets)
- **Polyamides** (Nylon) and
- **Polyester.**

Production of polyester and polyamid fibres is also performed by polycondensation.

The polyester fibre or the polyester resin is produced by combining the two monomers glycol and adipin acid. The fission product will be water (H_2O).

There is another way of producing polyester; by polycondensation of glycol and terephtal acid. The polyester macromolecule has build-in benzol rings.

POLYADDITION

Polyaddition has been used since 1937. Polyaddition is a reaction of two different types of molecules when reactive groups are brought together. No by–products are produced, but hydrogen atoms migrate from their positions in the functional group leaving combinable free valencies.

Two important types of plastics are made this way:

- **Polyurethanes** and
- **Epoxies**

FOR TRAINING PURPOSES ONLY!

© Lufthansa Technical Training

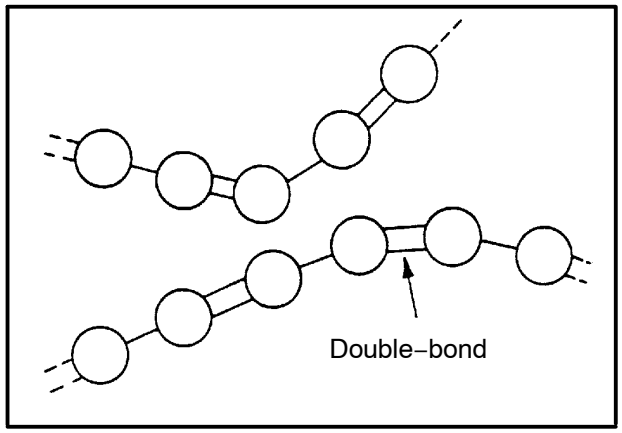

pre–polymerisised resin

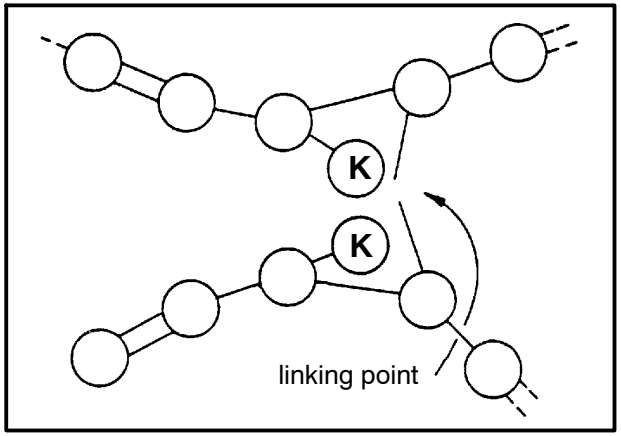

Curing through crosslinking

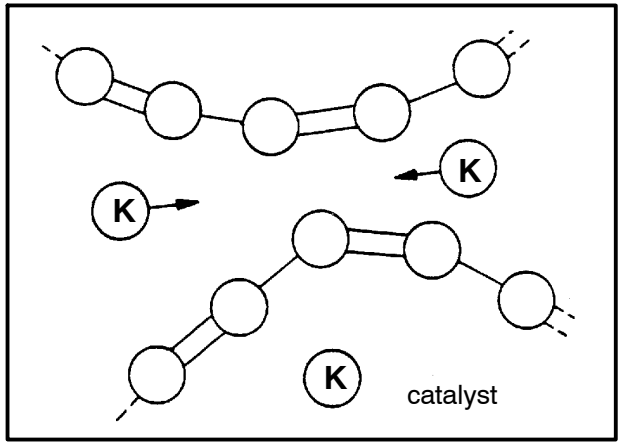

Addition of hardener

Figure 44 Polyaddition

FOR TRAINING PURPOSES ONLY!

© Lufthansa Technical Training

Composites General

Introduction

The term composite is used to describe two or more materials that are combined to form a much stronger structure than either material by itself.

The most simple composite is composed of two elements: a matrix (fabric) which serves as a bonding substance (adhesives or resins), and a reinforcing material. Prior to combination, the matrix is generally in liquid form and the reinforcing material is a solid. When the substances are combined and cured, the part is stronger than the fabric is by itself, and stronger than the resin is by itself. Many times a third component is added in the form of a core material. All of these materials are combined to make a part that is stronger than each was originally.

Modern composites are advanced to the point that they are strong enough to be used in primary airframe components like rudders and floor beams. In some cases, the whole airframe is designed of advanced composite materials e.g. Boeing 787.

Advantages

Composite materials are used mainly to reduce weight. If weight can be saved, more cargo, fuel or passengers can be carried.

More advantages are:

- High strength-to-weight ratio
- Reduction of parts and fasteners
- Reduction of wear
- Corrosion resistance.

Disadvantages

Disadvantages are:

- General expensive
- Not easy to repair; you need well-trained staff, tools, equipment and facilities to repair composite components.

FOR TRAINING PURPOSES ONLY!

© Lufthansa Technical Training

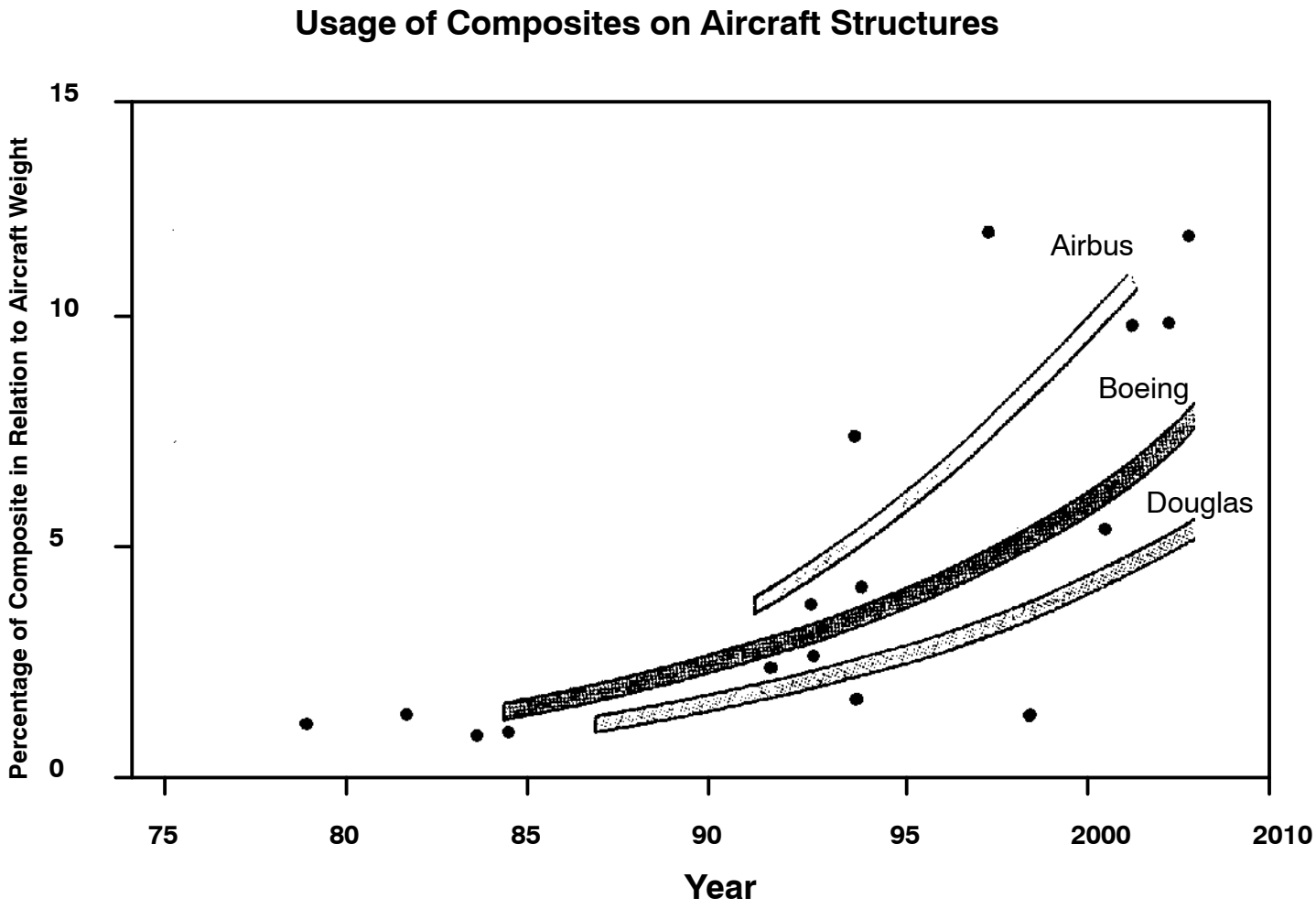

Figure 45 Usage of Composite on Aircraft Structures

FOR TRAINING PURPOSES ONLY!

© Lufthansa Technical Training

THIS PAGE INTENTIONALLY LEFT BLANK

FOR TRAINING PURPOSES ONLY!

© Lufthansa Technical Training

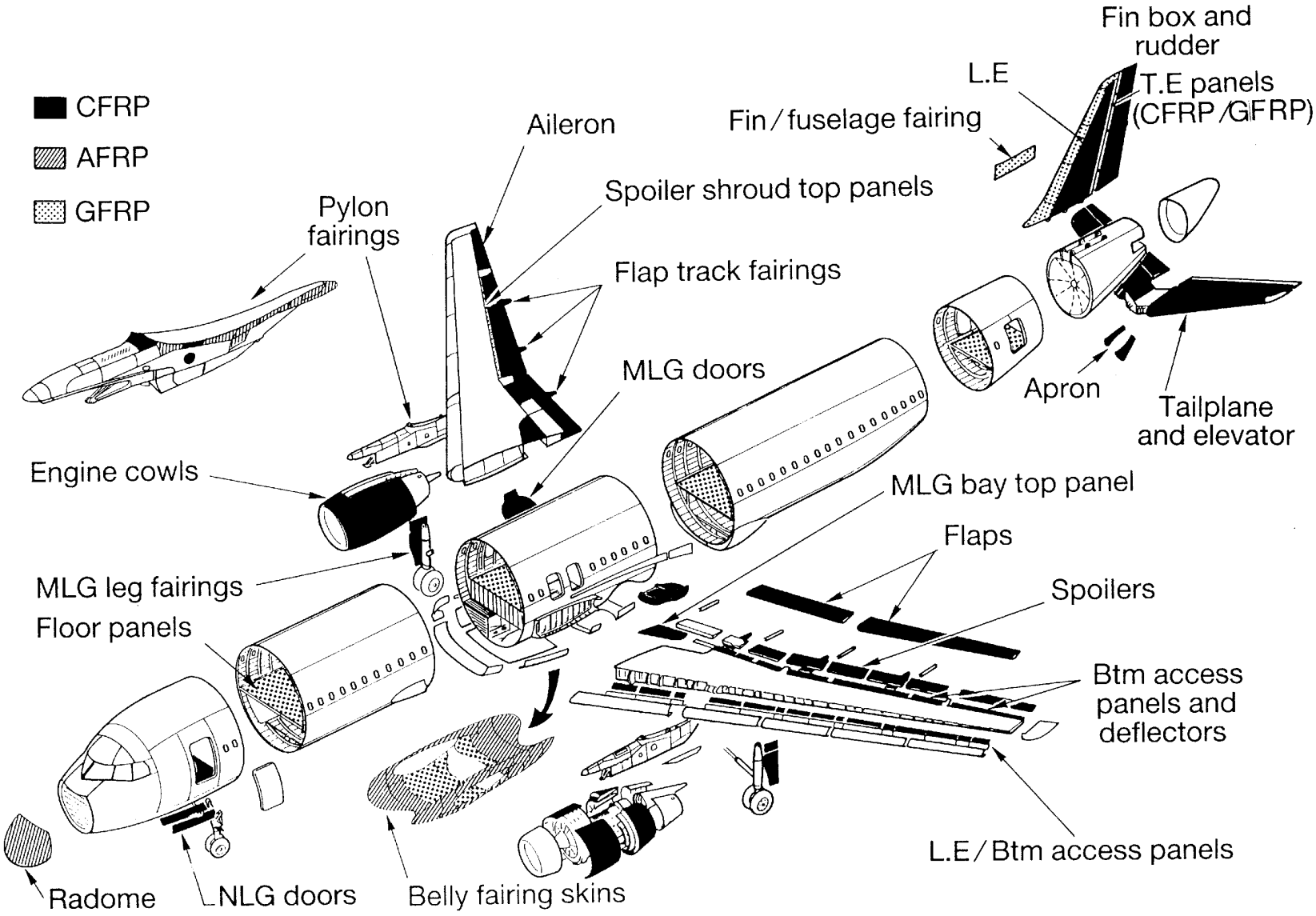

Figure 46 Composite Application on A320

FOR TRAINING PURPOSES ONLY!

© Lufthansa Technical Training

Reinforcing Materials

Fibreglass

Fibreglass is made from small strands of molten silica glass and than spun together and woven into cloth. There are many different weaves of fibreglass available, depending on the application. The wide range of application of the material and its low cost make it one of the most popular used. Fibreglass weighs more and has less strength than most other fibre material. Newly Airbus uses quartz-fibres instead of fibreglass. This fibre has improved resistances against externeous damages. That's why it is used mainly for the radome.

Aramid

Aramid fibres are general characterized by its yellow colour, light weight and its excellent tensile strength. Aramid is a registered tradename of the Du Pont Company and is an ideal material for aircraft parts that are subject to high stress and vibration (e.g. rotor blades). It is also used in bullet-proof vests, in this application better known as KEVLAR.

Damage to Aramid structural components will, in general, be repaired with fibreglass.

Graphit

Black graphite/carbon fibre is very strong and stiff and is used for its rigid, strong properties. This material is used to manufacture primary structural components like ribs and floor beams. Graphite is stronger in compressive strength than Kevlar, however it is more brittle than Kevlar. It has the problem of being corrosive when bonded to aluminium.

FOR TRAINING PURPOSES ONLY!

© Lufthansa Technical Training

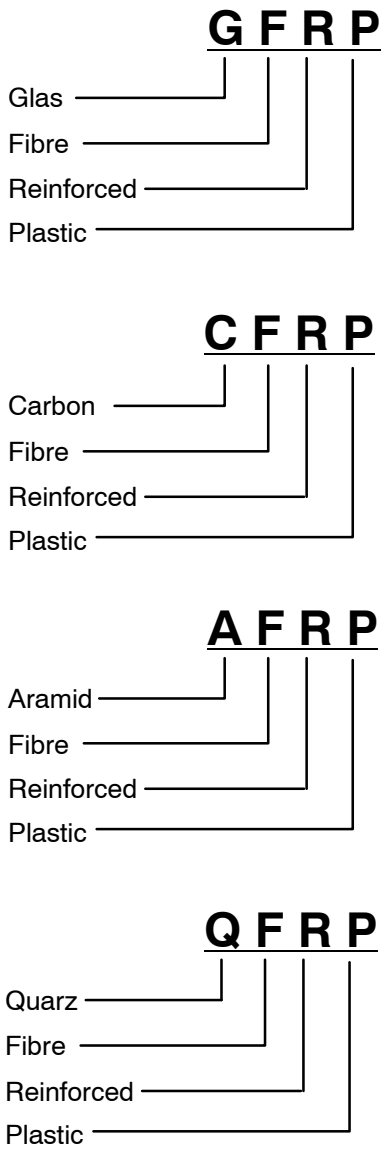

Figure 47 Reinforced Plastics

FOR TRAINING PURPOSES ONLY!

© Lufthansa Technical Training

Styles of Fabrics

Roving

A Roving denominates fibres which are combined to fibre bundles in large amount without any twist and nearly parallel. Commomny they consist out of 60 threads which are made out of 200 elemental fibres.

You can achieve the highest strengths with Rovings, but forces can only be absorbed in longitudinal direction of the Roving. When many Rovings are laying side by side in a mat, you call it **''Unidirectional Tape''**.

Mats

Mats are area-measured-materials which are not woven and made out of cut or non-cut, multidirectional laying fibres which are fixed by sprayed on binder.

Glass mats are budget-priced and consist out of multidirectional fibres with a length of approx. 50mm. They are delivered in the form of mats which are fixed with the help of a binder. As soon as the mat is impregnated with resin the binder is dissolving.

They have the same strength in every direction, which is however commonly lower than the strengths of fabrics.

Fabrics

Glassfibre fabrics are produced with weaving machines. They are area-measured-materials which cross rectangularly with warp threads and filling threads.

The fabrics are designated after type and fineness of the thread, after yarn density and after weave construction.

FOR TRAINING PURPOSES ONLY!

© Lufthansa Technical Training

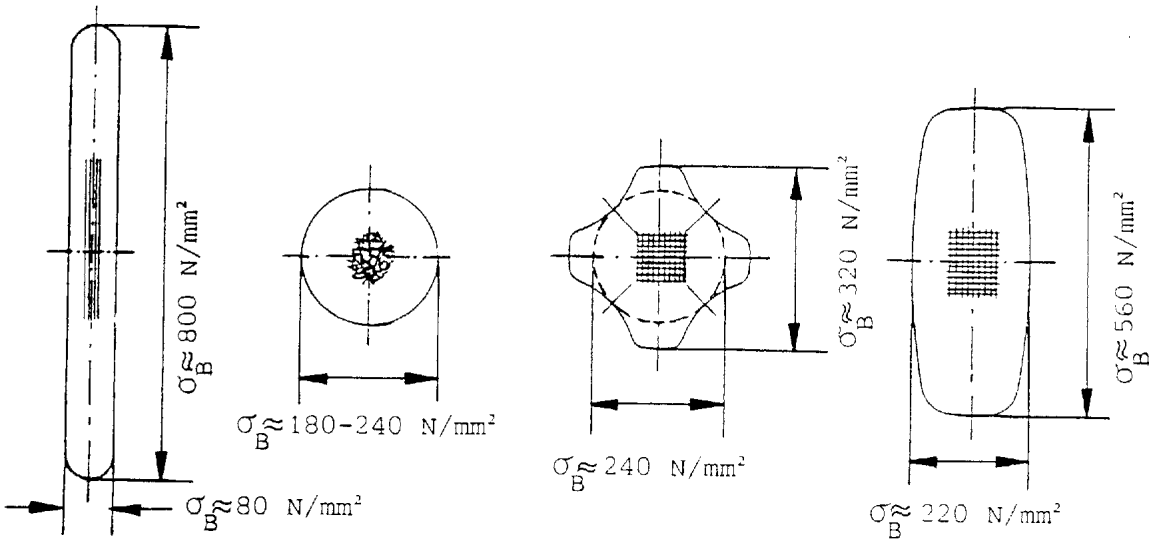

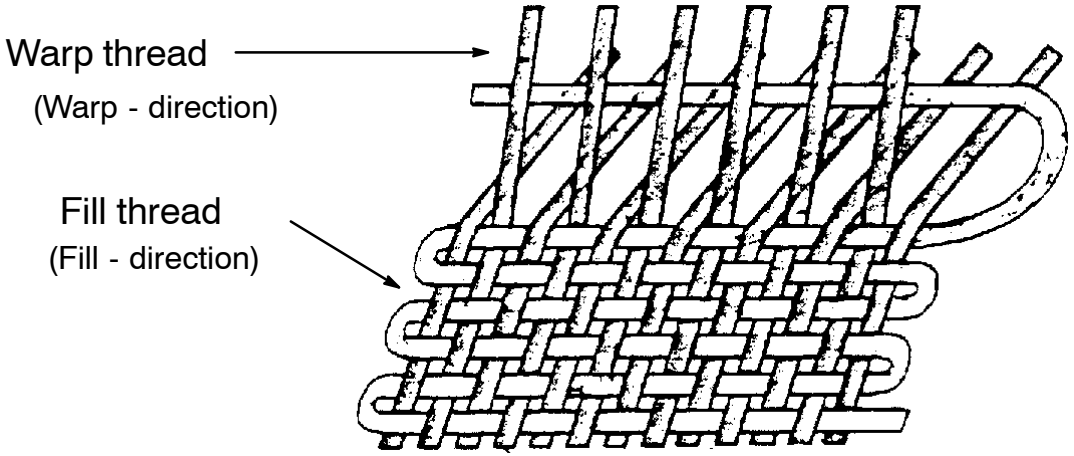

Figure 48 Styles of Fabrics

FOR TRAINING PURPOSES ONLY!

© Lufthansa Technical Training

Prepregs

Prepregs

Prepreg is a abbreviation for pre-impregnated fibers. These fibres are already impregnated with resin in the production process and then cooled down very fast. They start to cure when they are put on with heat.

Standard - Prepreg

to connect GFRP laminates (resin-resin-Connection)

Bonding - Prepreg

to connect GFRP laminates with honeycombs or sheet metal parts.

The resin should optimally wet the connection and respectively the assembling parts. Otherwise unnecessary resin in an fibre reinforced laminate causes a loss of strength, because the resin is the weakest link in the combination of resin and fibre.

The percentage of resin in an “Elitrex“–Prepregs is:

Prepreg	Resin content
Standard Prepreg	38%
Bonding Prepreg	50%

During the curing process in an autoclave or in a heating press a certain amount of resin (18 to 20% of the matrix) is pressed out. This is known as “Resinflux’’.

FOR TRAINING PURPOSES ONLY!

© Lufthansa Technical Training

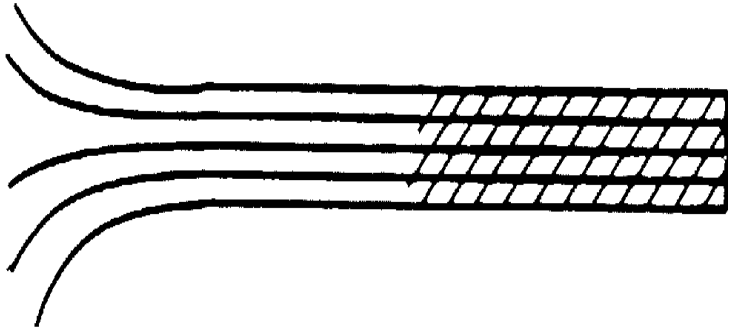

5 Laminates are building up a monolithic GFRP–wall. All 5 Layers are standard–Prepregs with 38% matrix

Overall there are 7 layers built together in the clamping border of a honeycomb part. The direct connection to the comb is done by a bonding-prepreg with 50% matrix, in order to assure the wetting of the comb without a loss of resin in the GFRP laminate.

All other layers are standard prepregs with 38% matrix.

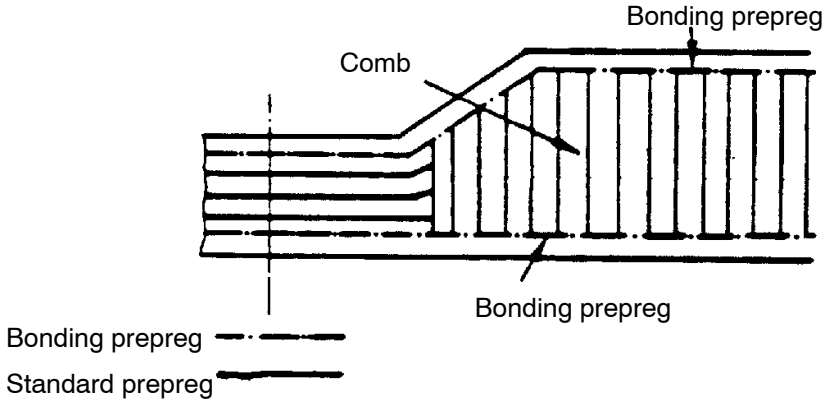

Figure 49 Standard and Bonding Prepreg

FOR TRAINING PURPOSES ONLY!

© Lufthansa Technical Training

Core Material

General

Core material is the central member of the assembly. When the core is bonded between two thin-face sheets, it provides a rigid, lightweight component. This type of construction is known as sandwich construction.

Foams

There are a lot of different types of foam materials available, depending on the application. They are mainly used as filler material, like in through holes or bushings.

Honeycomb

This type of core material has the shape of natural honeycomb and has a excellent strength-to-weight ratio.

Honeycomb materials can be constructed of aluminium, Kevlar, carbon, fibre-glass, Nomex (trade name of Du Pont) or steel.

Nomex for example is a paper-impregnated material

Honeycomb Fabrication

Today there are two common methods of honeycomb fabrication:

11. **Corrugation process**. Material which can be converted using this process include metals, plastics, plastic reinforced glass and paper. The process is similar to the production of corrugated iron sheets.
12. **Expansion process**. In this process, all bonds are made simultaneously (the corrugation process is essentially a one-layer-at-a-time operation), after that the whole block is extended vertically or horizontally to create the characteristic honeycomb structure.

Other Core Materials

Styrofoam, urethane, wood and several other materials are also used as core materials. This is mostly done for tertiary structures.

FOR TRAINING PURPOSES ONLY!

© Lufthansa Technical Training

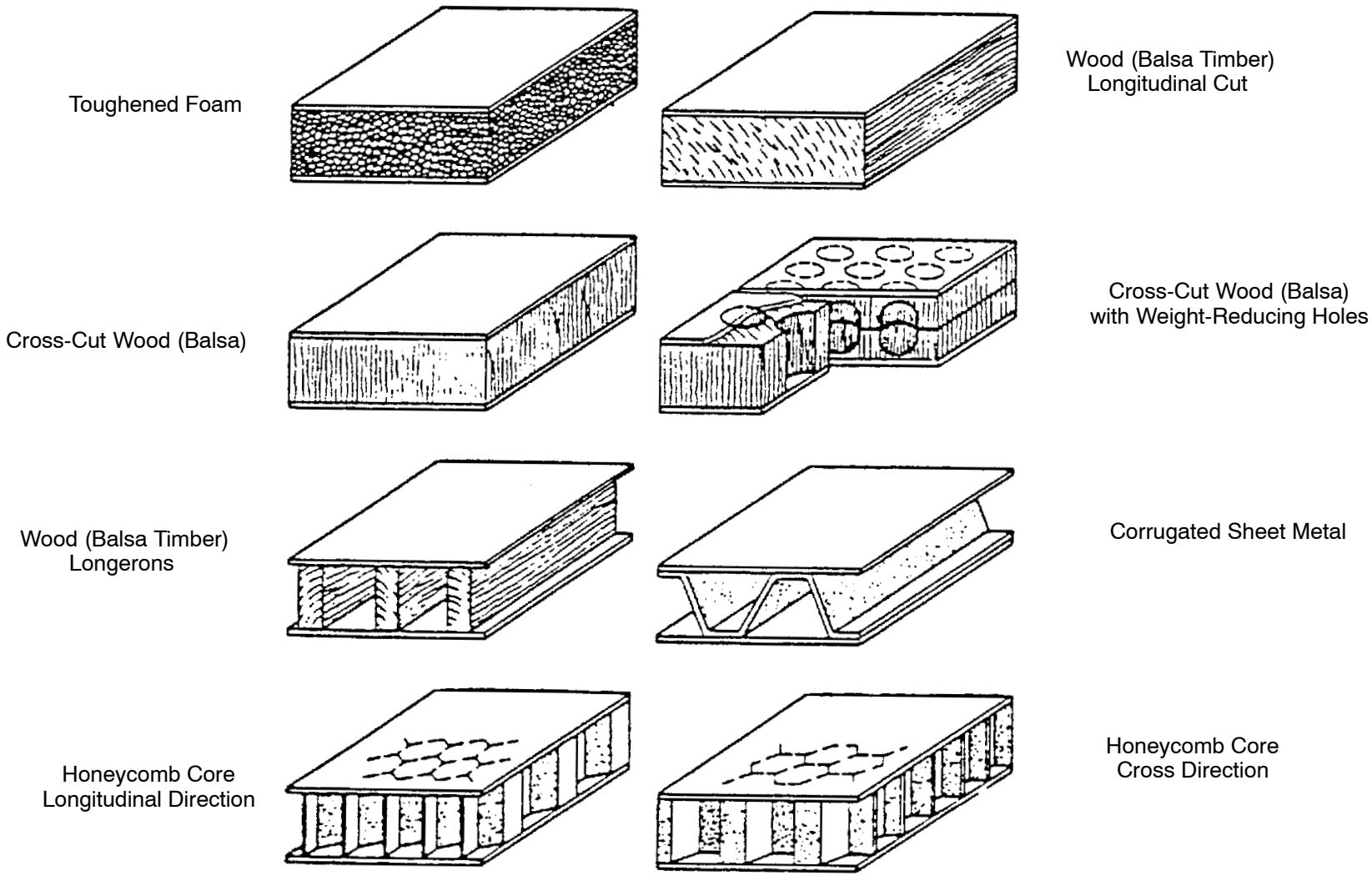

Figure 50 Different Core Materials

FOR TRAINING PURPOSES ONLY!

© Lufthansa Technical Training

Surface Treatment of Composite Materials

Electrical Bonding

There are a lot of different methods used by manufacturers to dissipate the electrical charge on composite components:

- Flame spray
- Bonding Jumper
- Aluminium wires or aluminium fabrics, which are woven into the top layer (Because of corrosion CFRP is particullary used with fabrics out of copper or CRES). The fabrics are called „Wire Mesh“.
- Thin aluminium foils which are bonded to the top layer

Painting

After manufacturing/repair, the part or repair area is painted to seal the surface from moisture. Here is also made a difference between conducting and isolating paints.

FOR TRAINING PURPOSES ONLY!

© Lufthansa Technical Training

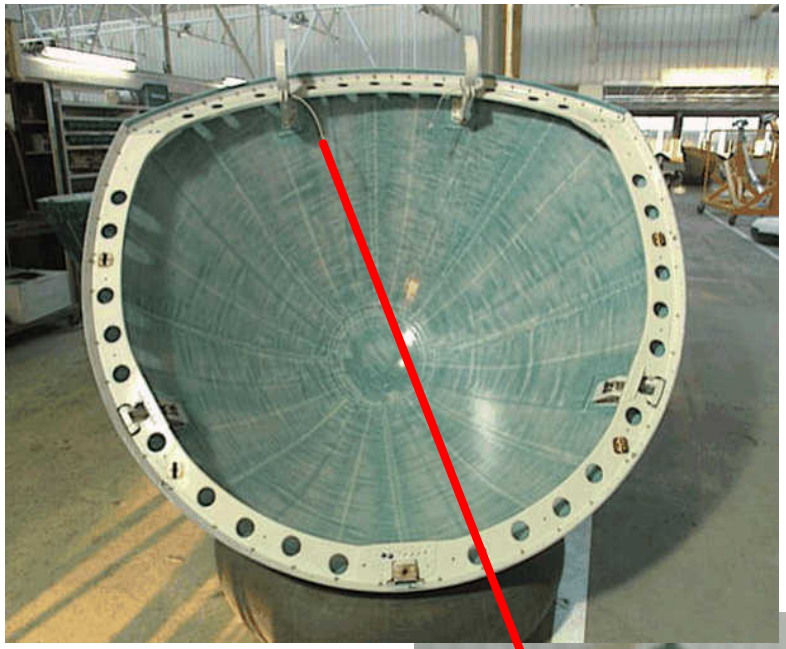

A320 Radome

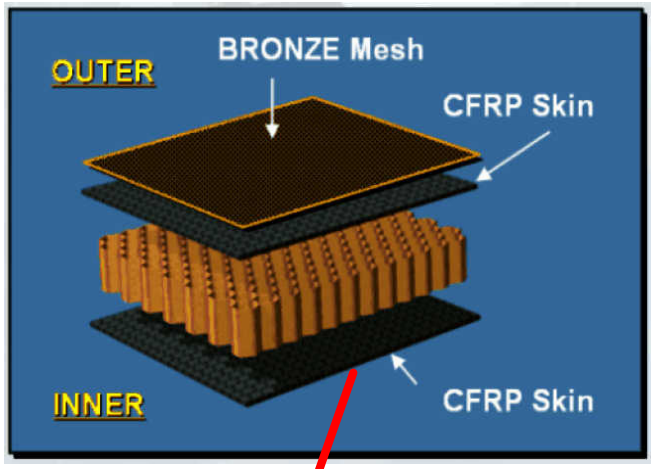

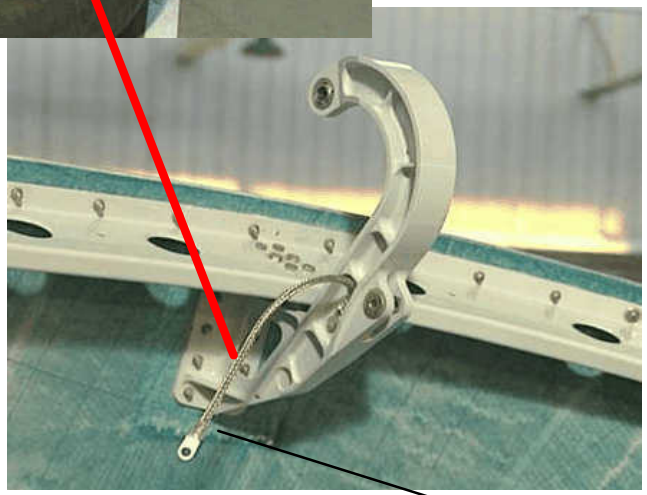

Bonding Braid

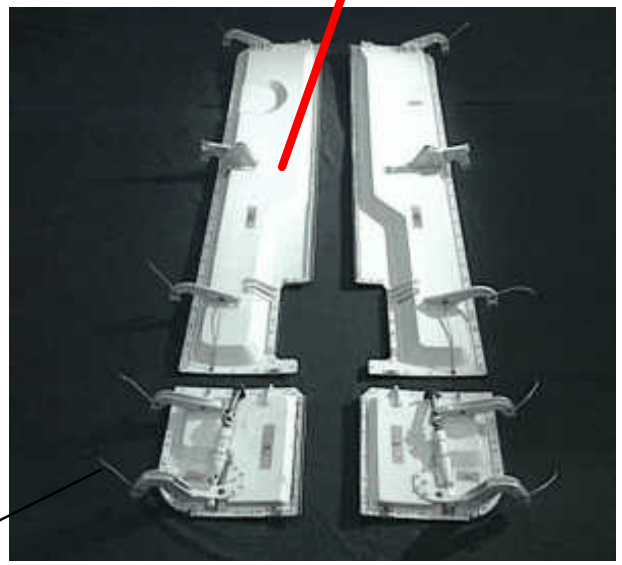

A320 Nose Landing Gear Doors

Figure 51 Electrical Bonding of Composites

FOR TRAINING PURPOSES ONLY!

© Lufthansa Technical Training

SEALANT AND BONDING AGENTS

Adhesives

General

Adhesive is a substance used to bond two or more surfaces together. Adhesive bonds distribute the stress at the bonding point, are moisture- and corrosion-resistant and eliminate the need for rivets and bolts.

The effectiveness of an adhesive depends on several factors, including

- Resistance to slippage and shrinkage
- Malleability
- Cohesive strength and
- Adhesion

Adhesives vary with the purpose for which they are intended.

Synthetic adhesives

Synthetic adhesives, used either alone or as modifiers of natural adhesives, perform better and have a greater range of application than the natural products. Most of them are known to us as polymerisation adhesives.

Elastomeric adhesives

Elastomeric adhesives are synthetic adhesives or natural adhesives on the basis of Silicon. They join dissimilar metals without the hazard of producing galvanic corrosion and can provide the strength of welded joints. Often they are the ideal bonding material and sometimes the only one which can be used to join metal with plastic or metal with composite.

Thermosetting adhesives

Thermosetting adhesives are transformed into tough, heat-resistant solids by the addition of a catalyst or the application of heat, e.g. epoxide resin.

All other adhesives may be classified as non-structural. Non-structural adhesives include most household glues, hot–meld adhesives, rubber and other thermoplastics.

Contact adhesives

Atmospheric pressure will press two solids together if there is no air between the two plane parallel surfaces. The barometric pressure is 1 bar = 10N/cm^2. For a contact area of 100cm^2 a tensile force of 1000N is needed to pull the two surfaces apart. Contact adhesives work the same way by using atmospheric pressure. (e.g. Pattex)

Solvent adhesives

Solvent adhesives contain plastics or resins dissolved in a solvent. The solvent has to evaporate to cure the adhesive. (e.g. UHU)

Dispersion adhesives

Dispersion adhesives contain resins dissolved in a water solution, such as wood glue or wood paste. (e.g. Ponal)

FOR TRAINING PURPOSES ONLY!

© Lufthansa Technical Training

THIS PAGE INTENTIONALLY LEFT BLANK

FOR TRAINING PURPOSES ONLY!

© Lufthansa Technical Training

ADHESIVES (CONTD.)

Film Adhesives

Film adhesives are similar to prepregs. They are used for bonding metal to metal, sandwich core to skin and GFRP, AFRP and CFRP. Adhesives are available as unsupported and supported films. Supported films contain a woven nylon carrier.

Film adhesives are supplied on a release paper backing, in rolls with polythene interleaving to protect the adhesive in storage and when being handled. These coverings must be removed before the adhesive can be used.

The film adhesive has to be cured under a curing cycle, in accordance with the Structural Repair Manual and has to be stored under refrigeration at –18°C.

Foaming Adhesives Film

A foaming adhesive film is an adhesive in sheet form which expands during the curing cycle to fill gaps and adhere strongly to all parts of the structure with which it comes into contact. It is mainly used for the repair of honeycomb sandwich panels as a honeycomb core splice and as an edge–filling.

Plastic Foams

Plastic foams are produced with either ”closed” or ”open” (interconnected) pores and as either preformed rigid sheets or as fluids for injection into cavities.

Most thermoplastics and some thermoset resins can be foamed but the materials commonly used for aircraft components are polyvinyl chloride (PVC) and polymethacrylimide.

Consideration of its performance in a fire (in terms of fire resistance and toxicity of the smoke) will determine the choice of foam.

Thixotropic Agents

Some plastic resins are extremely sensitive to temperature changes. At 15°C they may be as thick as molasses, while at 30°C they will run like water.

Since heat is used as a curing agent, these resins may tend to run off of any vertical or near-vertical surface before they have a chance to cure. In order to eliminate this problem, we can add a thixotropic (thickening) agent. Commonly used agents are:

- **Micro-balloons and**
- **Aerosil**.

Micro-balloons

Micro-balloons are made of hollow phenolic balls with a range of diameter from about 10 to 300 microns.

In applying this agent, epoxy or polyester resins are mixed as directed, and the micro–balloons are gently folded in, using care not to beat or crush them. A paste of light consistency is made up and towelled onto the surface where it cures into a hard, light–weight filler. This can be filed or sanded to the required contour.

Aerosil

Aerosil is a very light, white powder, which is a byproduct of combustion.

erosil is used as a thixotropic agent. You can find it in combination with resins, lacquers and even in toothpaste and sauces.

FOR TRAINING PURPOSES ONLY!

© Lufthansa Technical Training

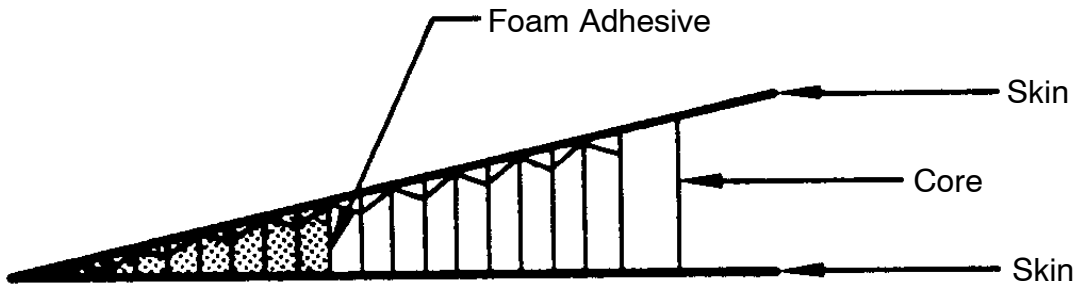

Figure 52 Adhesive Application Example

FOR TRAINING PURPOSES ONLY!

© Lufthansa Technical Training

Resins

General

Thermosetting and thermoplastic are the two main types of resin used as a matrix.

The selection of the applicable type of resin to be used for element build–up or repair execution is based on various parameters. Nevertheless, it must be remembered that most of the mechanical performances of a composite are given by the fibres and their orientation.

Thermosetting resins

When mixed with the specified hardener and cured, the thermosetting resin sets in a given form. Hardening is irreversible and the resin would be damaged when heat is applied.

Epoxy and phenolic resin are the two main types of resin used for composite structures.

- **Epoxy resins**
  - ...are used for external components due to their good mechanical properties. (A320 Stabilizer, Ailerons etc.)
- **Phenolic resins**
  - ...are used for cabin furnishing due to their fire resistance and low toxicity. (Floor Panel, Galley etc.)

Thermoplastic resins

When heated, thermoplastic resin becomes a plastic. After cooling, the resin sets and hardens in a given form. Hardening **is** reversible.

Thermoplastic resins are not currently used on composite structures.

Properties of resins

The mechanical properties of resins (polymers) can be improved drastically by adding fibres, but for a composite to perform well the fibres must be bonded together so that they act as a team. The choice of polymer is important. The main features of a good polymer are:

- Mechanical properties
- Coating and bonding to the fibres
- Easy to use

This features are mainly satisfied by phenolic and epoxy resins.

Polyester resin

Polyester resin does not have the quality for structural components because it does not bond to fibres very well and it retreats from them while curing.

In engineering this phenomenon is known as “recovery“. At this the composite loses ca. 35 percent of its strength.

FOR TRAINING PURPOSES ONLY!

© Lufthansa Technical Training

THIS PAGE INTENTIONALLY LEFT BLANK

FOR TRAINING PURPOSES ONLY!

© Lufthansa Technical Training

Epoxy resins

General

Epoxy resins are used in high-tech composites because their mechanical properties are superior to those of polyesters. They are, however, much more expensive and not easy in use. They, too, are viscous liquids but cure by a different process which requires more accurate mixing.

Resins and hardeners

The amount of hardener added is critical, because using the wrong amount would result in one of the following:

- Unreacted resin in the final cured resin
- Unreacted hardener in the final cured resin.

Both of these conditions would result in a weak product, and in extreme cases the epoxy would remain sticky.

Resin/Hardener ratios

Manufacturers normally state how many grams of hardener have to be added to 100g of resin. This figure is often referred to as phr, or parts per hundred of resin. For instance, the data sheet might say:

- Recommended resin/hardener ratio = 100 : 60 by weight
  - This means that 100g of epoxy resin requires 60g of hardener for complete cure. If, however, you are measuring out the resin and hardener *by volume*, the ratio may change because of the different densities of the two materials. In this case the ratio may be 100 : 65 *by volume*.

Resin/hardener ratios vary immensely from as low as 10 phr to as high as 150 phr for normal use. 100 phr means that you mix equal proportions of resin and hardener.

Cold and hot cure

Many epoxy resins will cure at room temperature, but some require a high temperature to cure properly. Even room-temperature resins can be heated to speed up the curing time and to improve the properties of the cured resin.

Disadvantages of epoxies

Toxicity

Some epoxies and diluents are known to cause dermatitis. Some amina curing agents are toxic. Good housekeeping is the best preventive measure. Cured epoxies are not deleterious to health.

Low Pot and Shelf–Life

Most two-component adhesive formulations must be mixed shortly before use. Some film and tape adhesives must be stored at low temperature for extended life, partially offsetting their advantages of convenience and reliability.

Moderate to High Cost

Epoxies are not cheap; however, their cost in a thin bond line is hardly a factor in the overall cost of the assembled product in most industrial applications.

The most common epoxies used in adhesives are derived from bisphenol A and epichlorohydrin (”bis–epi” resins) and are usually cured with reactive hardener containing primary and/or secondary amine groups.

FOR TRAINING PURPOSES ONLY!

© Lufthansa Technical Training

THIS PAGE INTENTIONALLY LEFT BLANK

FOR TRAINING PURPOSES ONLY!

© Lufthansa Technical Training

Epoxy Resins Characteristics

Adhesion

Epoxies have high adhesion to metals, glass, and ceramics. They can be formulated to give mixes of low viscosity with improved wetting, spreading and penetrating action.

Cohesion

When the resin is properly cured, the cohesive strength within the glue line is so great (and adhesion of the epoxy to other materials so good) that failure under stress often occurs in one of the adherents rather than in the epoxy or at the interface. This happens with glass and aluminium as well as with weaker adherents such as concrete or wood.

100% Solids

Unlike phenolics and some other resinous adhesives, epoxies cure without releasing water or other condensation by−products.

This makes it possible to bond epoxies at contact pressure only, or with no pressure at all, so a vacuum bag is not always needed. Also, since there is no water to remove and no volatile solvents, epoxies are convenient for assembly−line bonding of impervious surfaces such as metal or glass.

Low Shrinkage

Epoxies cure with only a fraction of the shrinkage of vinyl−type adhesives such as polyesters and acrylics; consequently, less strain is build into the glue line and the bond is stronger. Also, epoxy does not pull away from the glass fibres as polyesters do. The shrinkage can be reduced to a fraction of 1% by incorporating silica, aluminium or other inorganic fillers.

Resistance to Moisture and Solvents

Epoxies are insensitive to moisture. Their resistance to solvents is also outstanding and accounts for their rapid advance in the coatings field. They are effective barriers to heat and electric current.

The properties of an epoxy adhesive can be changed by

- the selection of a base resin and a curing agent
- alloying the epoxy with another resin, or
- y compounding with fillers.

Epoxies can be formulated for continuous service in high-temperature environments (in excess of 500°F (200°C)).

FOR TRAINING PURPOSES ONLY!

© Lufthansa Technical Training

THIS PAGE INTENTIONALLY LEFT BLANK

FOR TRAINING PURPOSES ONLY!

© Lufthansa Technical Training

Surface Wetting and Absorption

General

Probably the most important factor for bonding is surface wetting.

Factors with positive effect on surface wetting are:

- Removal of surface contamination
- Viscosity reduction through application of heat
- Time and pressure at the bonding point.

Factors with negative effect on surface wetting are:

- Fingerprints left on adherent surfaces
- Residues not removed from the adherent surfaces
- Low temperatures
- Incorrect or no surface pre-treatment.

Two important aspects for a durable adhesive joint are:

- **Mechanical hooking**
  - Mechanical hooking takes into account that the adhesive must penetrate into cavities before curing, otherwise trapped air will reduce the strength of the adhesive joint.
- **Surface wetting**
  - The phenomenon of surface wetting is frequently expressed with the contact angle that is formed between a droplet of a liquid (adhesive) and a solid (substrate).
  - The smaller the contact angle the more the liquid spreads over the surface, and vice versa.

Pre-treatment for bonding

Whenever bonding is to be carried out the surfaces must be pre-treated. They are likely to be contaminated with material which could affect the performance of the joint., pre-treatment procedures could be:

- Degrease, abrade and remove loose particles
- Degrease and chemically pre-treat. (CAA, SAA, Pickling)

Pickling is the denomination of a process to abrade the bonding surface with a chemical treatment in order to enlarge the adhesive surface.

Commonly chromic acid is used for that.

FOR TRAINING PURPOSES ONLY!

© Lufthansa Technical Training

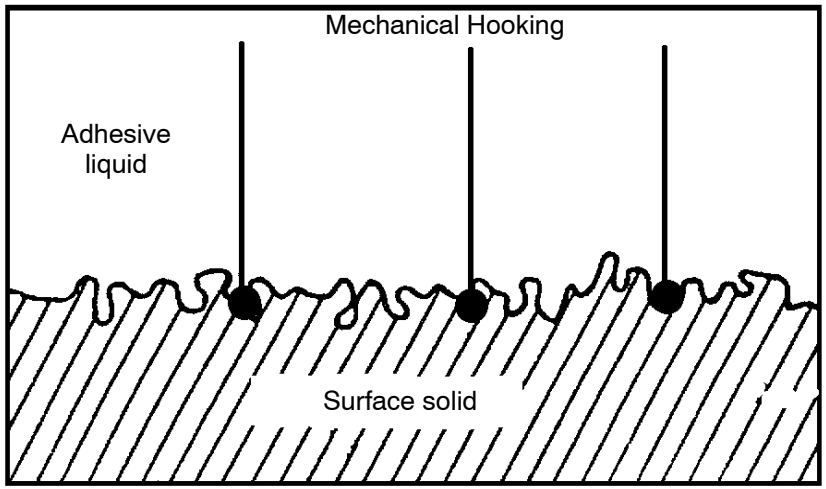

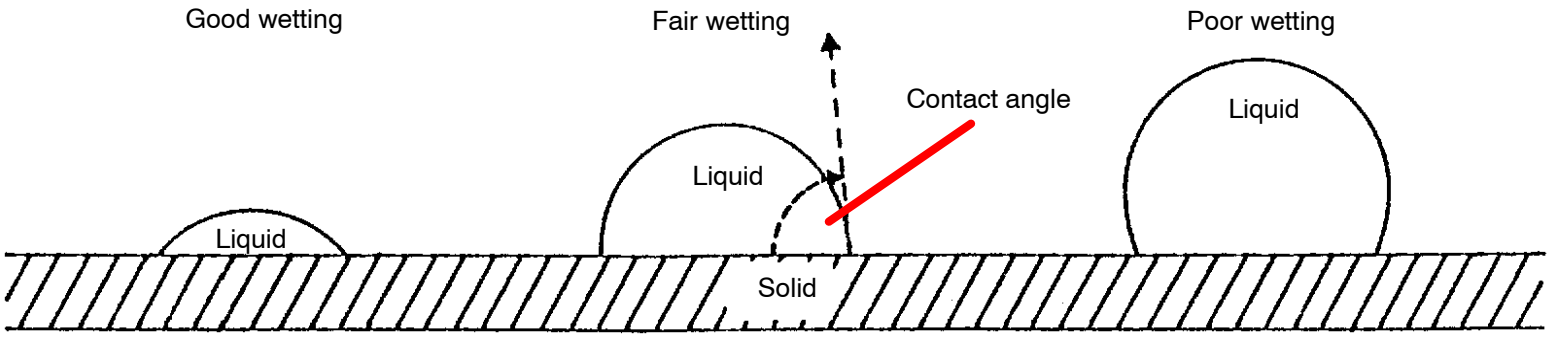

Figure 53 Surface Wetting

FOR TRAINING PURPOSES ONLY!

© Lufthansa Technical Training

DETECTION OF DEFECTS/DETERIORATION IN COMPOSITE AND NON-METALLIC MATERIAL

Damage to Composite Structure

General

When damage is discovered on a composite structural part, and before any further repair work is performed, a complete investigation of the affected area has to be carried out.

The appropriate investigation methods are specified in the **SRM** (Structure Repair Manual), and in the **NTM** (Non Destructive Test Manual).

Damage Detection

Damage may be discovered during scheduled inspections required by the maintenance program, or in unscheduled inspections when the part has been subjected to accidental damage.

Damage classification

A complete inspection of the damaged area or component will give the required information concerning the extent and the type of damage.

In order to define the applicable repair type and its associated limits (time to next inspection/repair and size of the repair), it is necessary to initially determine whether the damage is:

- **Allowable**
- **Repairable or**
- **Non repairable.**

The acceptance level of damage is determined using the graphics and instructions contained in the affected component-related SRM chapter (51;52 to 57) or the “allowable damage“ section.

FOR TRAINING PURPOSES ONLY!

© Lufthansa Technical Training

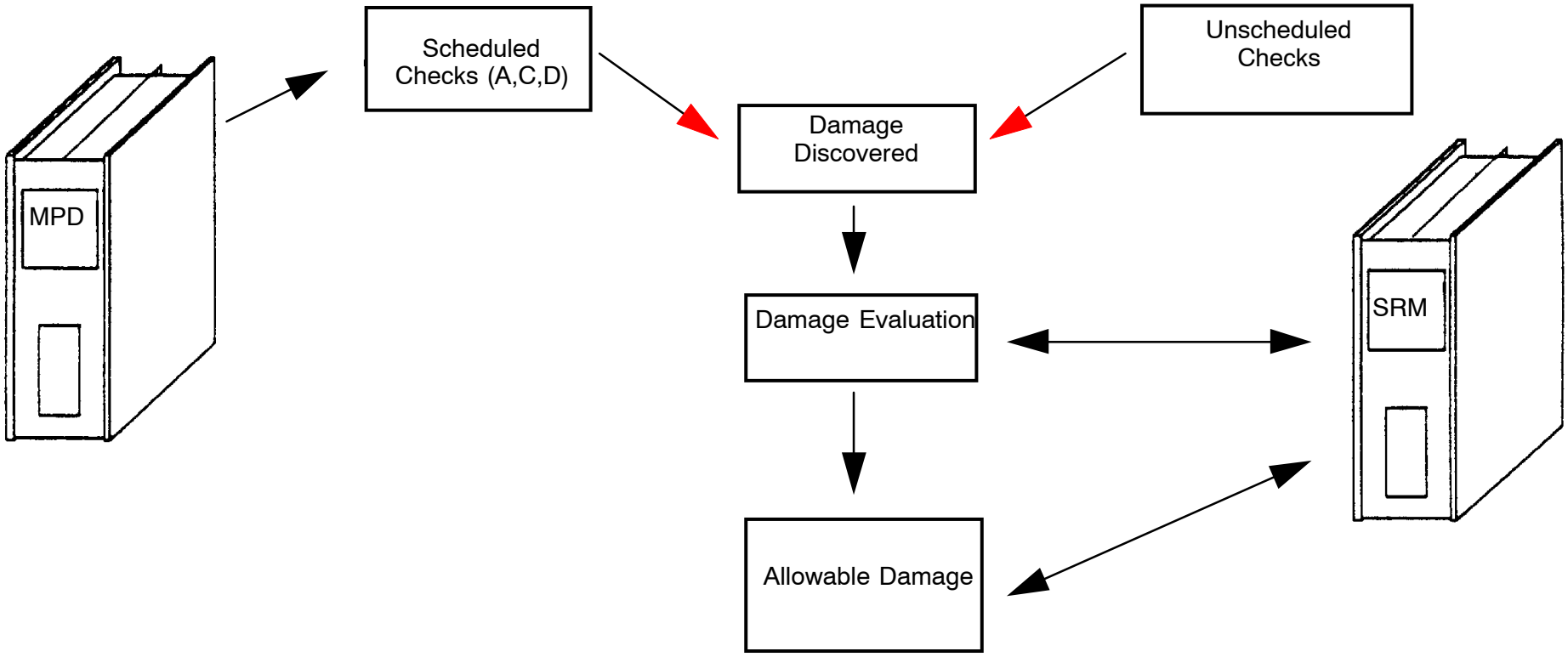

Figure 54 Composite Damage Evaluation According to SRM

FOR TRAINING PURPOSES ONLY!

© Lufthansa Technical Training

Damage Classification

General

For composite surfaces, damage is divided into two main categories:

- **Skin not-perforated damage**
  - Abrasion
  - Scratches
  - Gouges
  - Nicks
  - Debonding
  - Delamination
  - Dents.
- **Skin perforated damage (with damage of fibres)**
  - Lightning strike
  - Holes
  - Impact by foreign object (FOD)

Extent of Damage

Close visual and non-destructive testing methods such as tap–testing, ultrasonic and X–rays are used to determine the amount of damage.

For delaminated/debonded area determination, a minimum inspection area is defined. In case of indication, the inspection area must be extended until the limits of the affected zone are located.

Surface Zones

As damage is not of the same significance in each area of the component, each composite surface of the aircraft is divided into zones of different structural importance.

For each component the corresponding zones are given in the related SRM chapter.

FOR TRAINING PURPOSES ONLY!

© Lufthansa Technical Training

THIS PAGE INTENTIONALLY LEFT BLANK

FOR TRAINING PURPOSES ONLY!

© Lufthansa Technical Training

Damage Classification Types

Scratches/Gouges

A scratch is the result of contact with a sharp object and only surface fibres are affected and the edges are sharp. While a gouge is wider and deeper than a scratch, several plies are affected, but the edges of a gouge are generally smooth.

Scratches and Gouges affect structural strength and have to be repaired by removing the damaged plies and performing a hand lay-up.

Abrasion

Abrasion is damage to a surface caused by scuffing, rubbing or scraping of the component. Fibres are not damaged and mechanical performance is not affected. Abrasion damage is repaired by restoration of the surface protection.

Corrosion on sandwich structures

Humitidy as well as aggresive spilliges, e.g. of lavatory- / galley or intrance areas, are able to penetrate a sandwich structure starting from leaky locations of the sandwich structure. This results in loss of strength due to destruction or dissolution of the adhesives / resins.

Lightning Strike Damage

The effect of a lightning strike depends on the material will not be the same.

For non-conductive materials like Glass- and Aramid Fibre a large part of the component, if not completely protected, may be blown out because both skins are affected and the core generally vapourised due to the extreme heat.

Damage on carbon fibre structures will be less significant (spots, small holes, or charring).

Debonding

Debonding is when a separation of materials, e.g. stringer to skin, occurs due to an adhesive failure.

Delamination

Delamination is when the separation of plies occurs in a multi-laminate material. This can be caused by the material being hit (impact delamination), or when there is a resin failure for any other reason.

Erosion

Erosion could affect all the leading edge surfaces, especially when the initial surface protection system has been damaged. Erosion, when undetected or unrepaired, may generate composite deterioration. The component may be completely perforated and fluid ingress is likely to occur.

Water Absorption

Any detected moisture has to be removed to avoid further damage.

It reduces performance and increases the weight of the affected structure. Water absorption affects fibres and some resins. The absorption stops once the fibre and the resin is saturated.

Chemical Degradation

Chemical degradation principally affects the resin and is generally due to accidental contact with aggressive chemical liquids or products (e.g. hydraulic fluid). In case of chemical degradation detection, the whole contaminated area must be repaired.

Dent/Depression

A depression or a dent is a deformity caused by extraneous forces, which are applied to the structure. This can be an impact (FOD) for example.

This type of defect requires further NDT investigation to detect delamination or debonding. On sandwich structure, the honeycomb is generally damaged and a repair is required.

FOR TRAINING PURPOSES ONLY!

© Lufthansa Technical Training

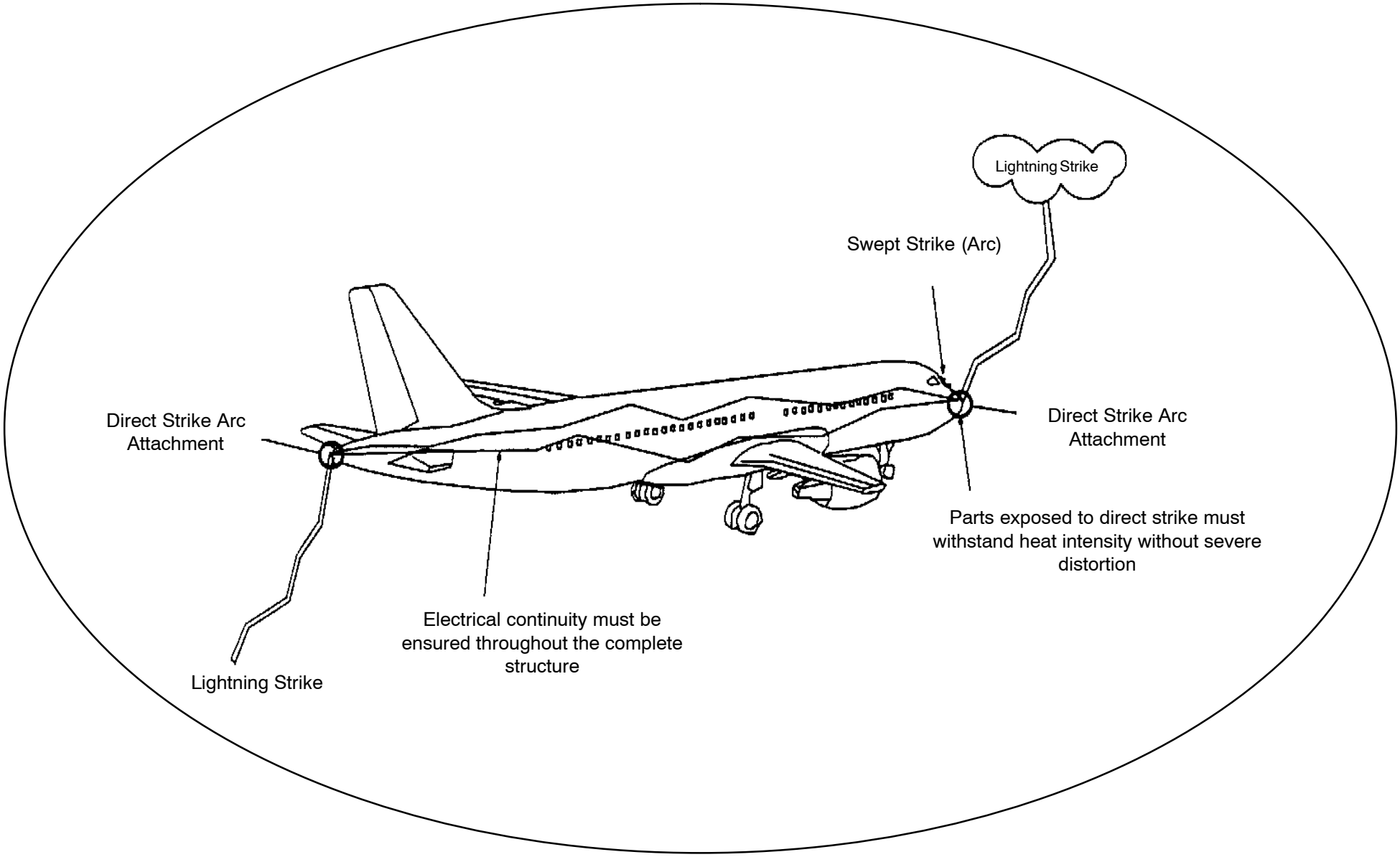

Figure 55 Resistance To Lightning Strike

FOR TRAINING PURPOSES ONLY!

© Lufthansa Technical Training

THIS PAGE INTENTIONALLY LEFT BLANK

FOR TRAINING PURPOSES ONLY!

© Lufthansa Technical Training

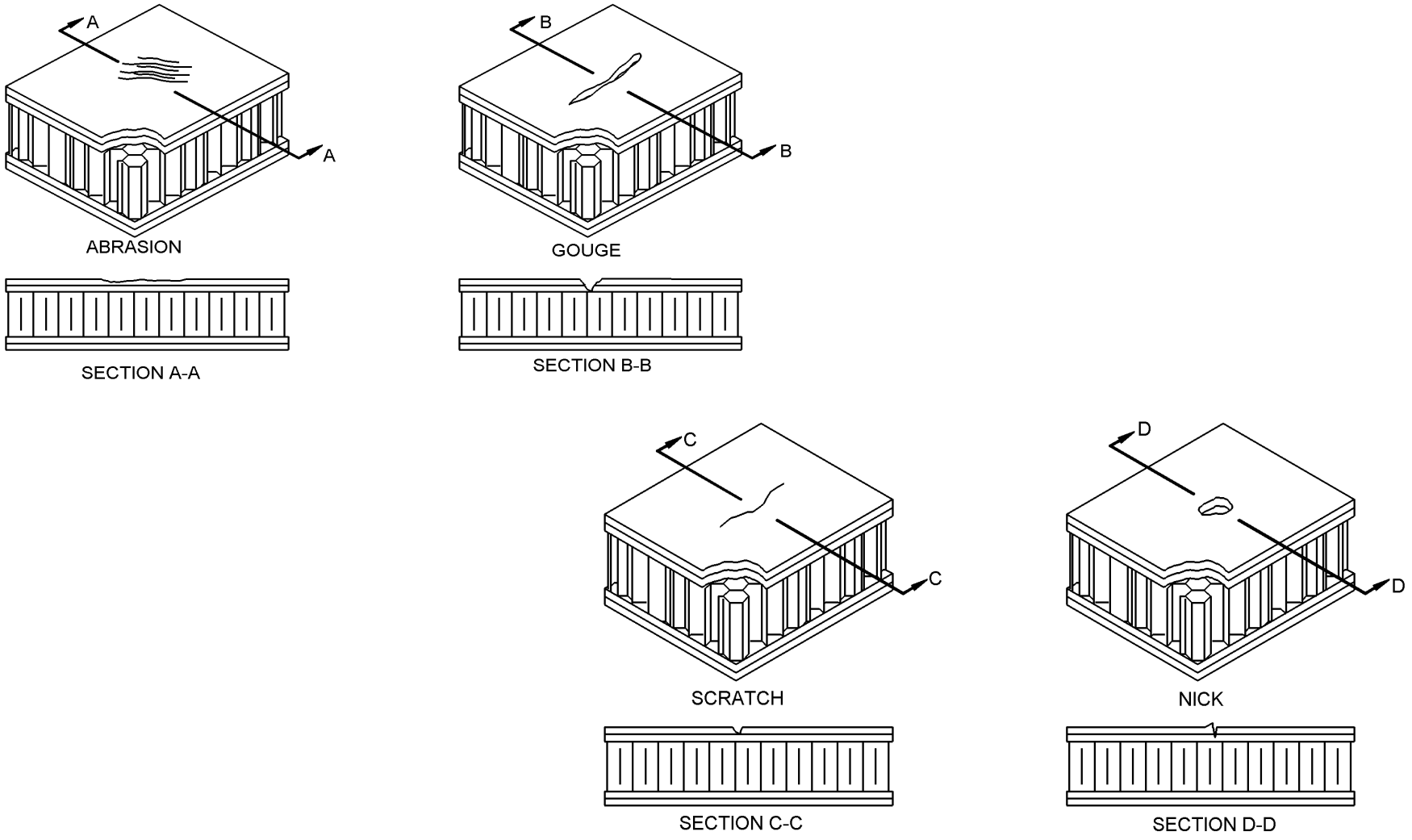

Figure 56 Damage Classification

FOR TRAINING PURPOSES ONLY!

© Lufthansa Technical Training

Non-Destructive Inspection Techniques (NDT)

General

A variety of NDT techniques are available as inspection tools for documenting manufacturing and service-related defects in composites. However, as in metallic structures, no single non-destructive inspection method can locate and isolate all defects.

Test methods

Equipment and techniques utilised in the non−destructive inspection of composite structures ranges in complexity alongside the visual inspection from the use of a coin tap-test to the use of lasers in holographic equipment.

- Visual or optical inspection
- Tap Testing
- Bond tester or resonator
- Penetrant
- Thermography
- Holography
- Acoustic emission
- Ultrasonics
- Radiography

Visual or Optical Inspection

Visual or optical inspection procedures are used for a quick assessment of flaws or damages.

Visual inspection is inexpensive, easy and fast. However, it is only capable of finding flaws that are evident on the visible surface.

Internal flaws in composites (such as delaminations, disbonding and matrix crazing) are not detectable. In addition, tight surface cracks and edge delaminations may not be detectable.

Visual aids such as mirrors, boroscopes and magnifiers are portable, and may be used to facilitate detection. Visual inspection results may be recorded in the form of photographs, if desired.

The surface to be inspected should be clean and free of conditions that may mask or obscure defects.

Tap Testing

Tap-testing is widely used for the quick evaluation of any accessible aircraft surfaces to detect presence of debonding or entrapped water.

The tap-test procedure consists of lightly tapping the surface of the part with a suitable object. You have to ensure, that neither the part itself nor the surface protection will be damaged.

A change of the resonance in the form of a change in sound or a dull response indicates an failure in the part.

The acoustic response of a good part can vary dramatically with changes in geometry, in which case a standard of some sort is required. The entire area must be tapped.

The method is limited to finding relatively shallow defects. In a honeycomb structure, for example, the far side bondline cannot be evaluated. Thus, two-sided access is required for a complete inspection of honeycomb structures. The method is portable, but no records are produced. The method is also highly dependent on the inspector’s subjective interpretation of the test response.

FOR TRAINING PURPOSES ONLY!

© Lufthansa Technical Training

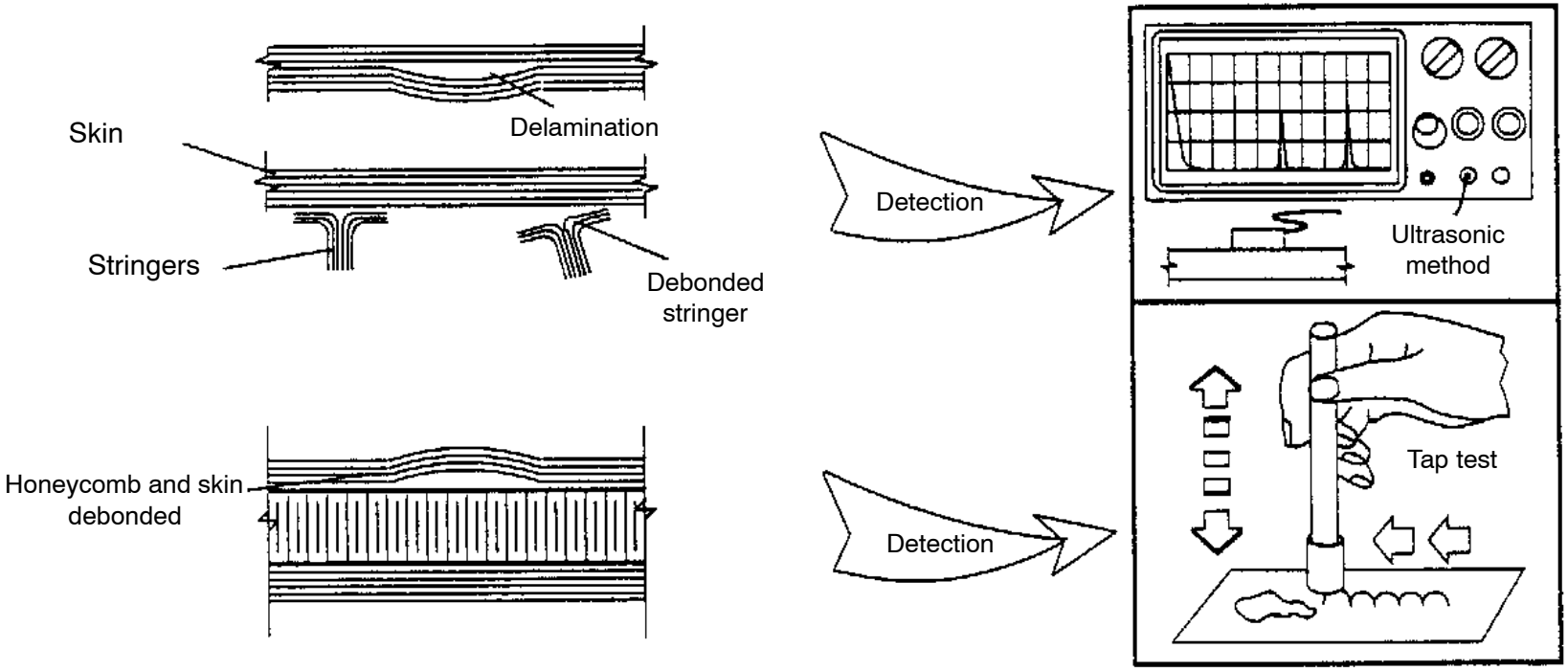

Figure 57 NDT Techniques 1

FOR TRAINING PURPOSES ONLY!

© Lufthansa Technical Training

Holography

Optical holography is extremely sensitive in measuring small surface defects. The part to be inspected is stressed by the application of heat, a static load or vibration to bring out the effect of the flaw on the surface displacement.

Holograms are taken when the structure is unstressed and then when the structure is stressed.

The holograms corresponding to the stressed and unstressed states are reconstructed to form interference fringes. The fringe pattern is then analyzed to reveal internal defects. The advantage of this technique is the inspection speed. The disadvantages are the tedious set-up procedures related to the optical components, the caution to be exercised in proper stress application and the difficulties in converting fringe patterns to a meaningful display (inspection image) of defects.

Ultrasonics

Ultrasonic waves travel through solids and liquids at relatively high speeds, but are rapidly attenuated in gasses. The density and the elasticity of the medium may affect the wave speed.

Depending on the type of particle movement induced by the ultrasonic transducer, a longitudinal wave, shear wave or surface wave may be transmitted in the medium. The refraction of an ultrasonic beam when it passes through the boundary between two media is comparable to the refraction of light beams in water or other media.

The technique is based on the attenuation of high frequency (1 - 30 MHz) acoustic waves passing through the composite part. The attenuation is generally a result of three causes

- **Dispersion:** due to viscoelastic effects in the resin matrix,
- **Geometric Dispersion:** due to the heterogeneity in the composite**,**
- **Geometric Damping:** due to internal defects such as delaminations, porosity, fibre and matrix cracks.

The surface roughness and the shape or contour of the test specimen will also affect the wave attenuation.

FOR TRAINING PURPOSES ONLY!

© Lufthansa Technical Training

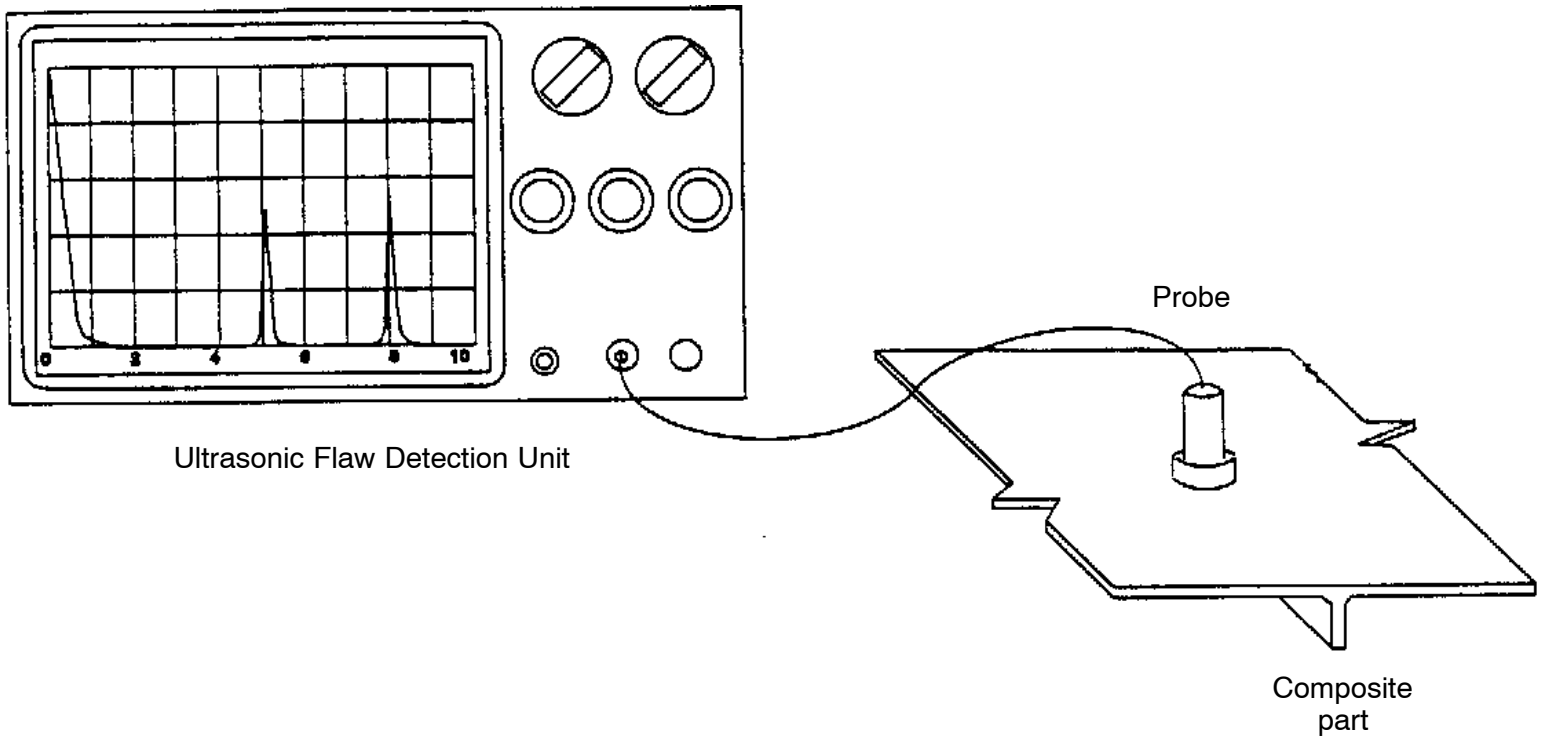

Figure 58 Ultrasonics

FOR TRAINING PURPOSES ONLY!

© Lufthansa Technical Training

Radiography

General

Radiography is a NDT technique that uses X−rays or gamma rays. A radiograph is a photographic record produced by the passage of these rays through a test object onto a film.

The radiation proceeds in straight lines to the object; some of the rays pass through the object and the others are absorbed. The amount transmitted depends on the nature of the material and its thickness. The presence of a void in the material causes more radiation to pass through the section than the surrounding material.

A radiograph is like a shadow picture; the darker regions on the film represent the more penetrable parts of the test specimen and the lighter regions are more opaque to the radiation.

X-Ray

X−rays are a form of electromagnetic radiation similar to light. They are produced when electrons, traveling at high speed, collide with matter or change direction.

In X−ray tubes, electrons are accelerated by a difference of potential between the cathode (source of electrons) and the target.

Gamma Rays

Gamma rays are similar to X−rays in their characteristics, and are emitted from the nuclear disintegrating of radioactive substances like radium and cobalt 60.

Both rays have extremely short wave-lengths that provide them with the ability to penetrate materials that absorb or reflect ordinary light.

FOR TRAINING PURPOSES ONLY!

© Lufthansa Technical Training

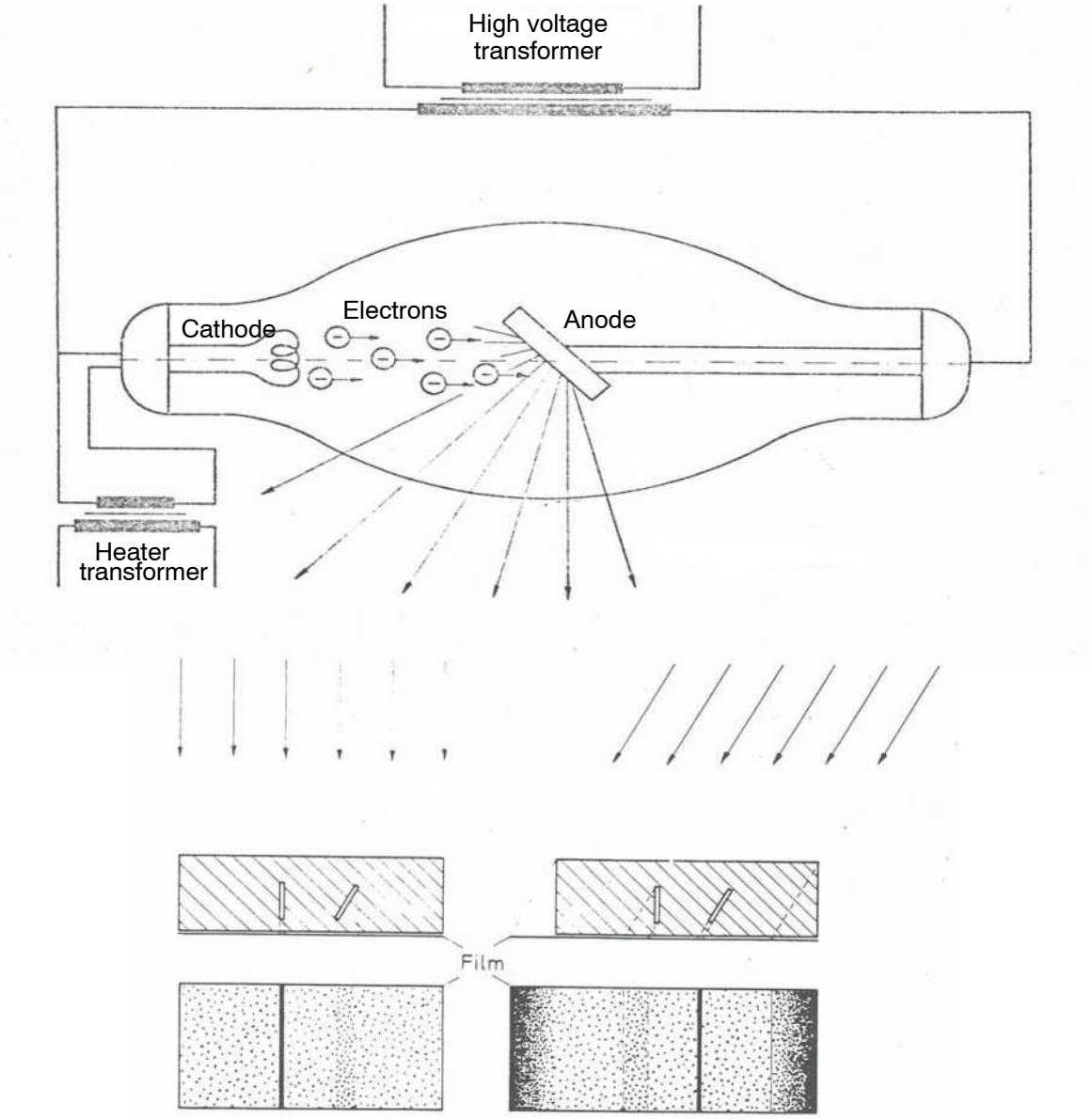

Figure 59 X-Ray Method

FOR TRAINING PURPOSES ONLY!

© Lufthansa Technical Training

Typical Repairs of Composites

General

Composite parts are especially vulnerable in air traffic and maintenance. That is why the SRM offers different repairs.

This repairs can be found in the SRM in the chapter 51–57:

- Repair of edges
- Repair of coverings and honeycombs
- Injection repair

FOR TRAINING PURPOSES ONLY!

© Lufthansa Technical Training

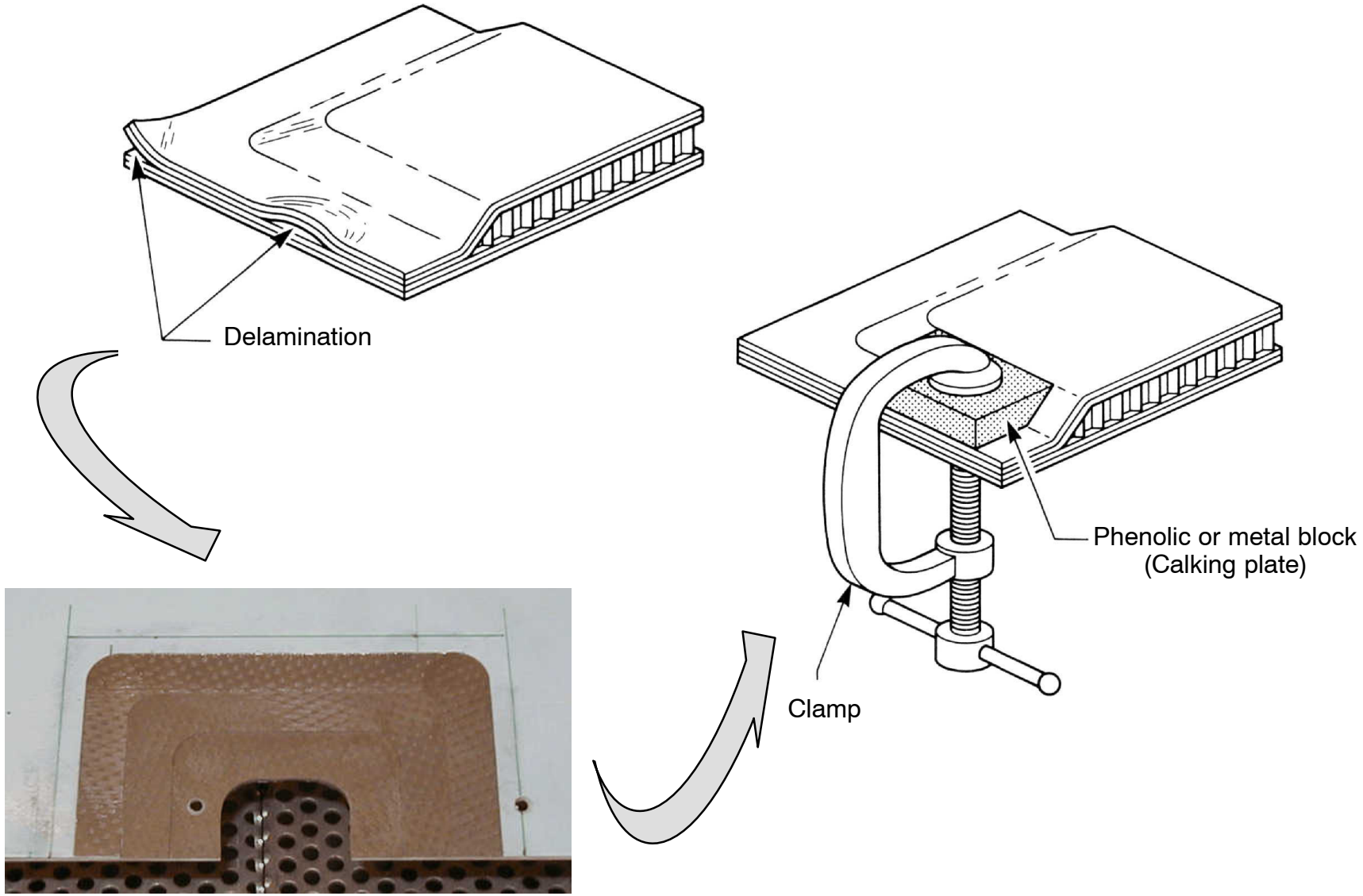

Figure 60 Typical Edge Delamination Repair

FOR TRAINING PURPOSES ONLY!

© Lufthansa Technical Training

Repair of honeycombs and covering

This repair is typical for sandwich structures. It is easy to accomplish especially if the damaged parts are very small.

Today two different repairs of sandwich parts can be accomplished:

- Repair of the covering, if only one side of the covering and/or parts of the combs are damaged.
- Repair of the covering, if both covering parts and the combs are damaged.

This repair can be accomplished as a cold or a hot adhesive repair per original manufacturer specification.

FOR TRAINING PURPOSES ONLY!

© Lufthansa Technical Training

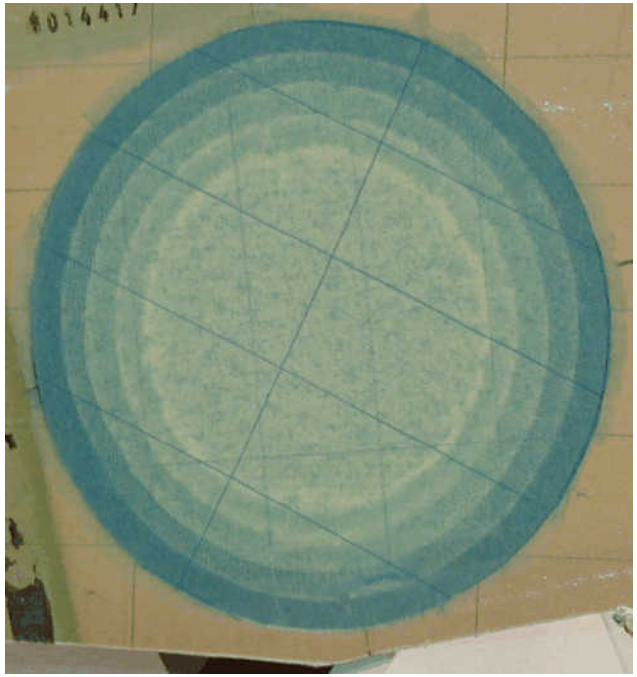

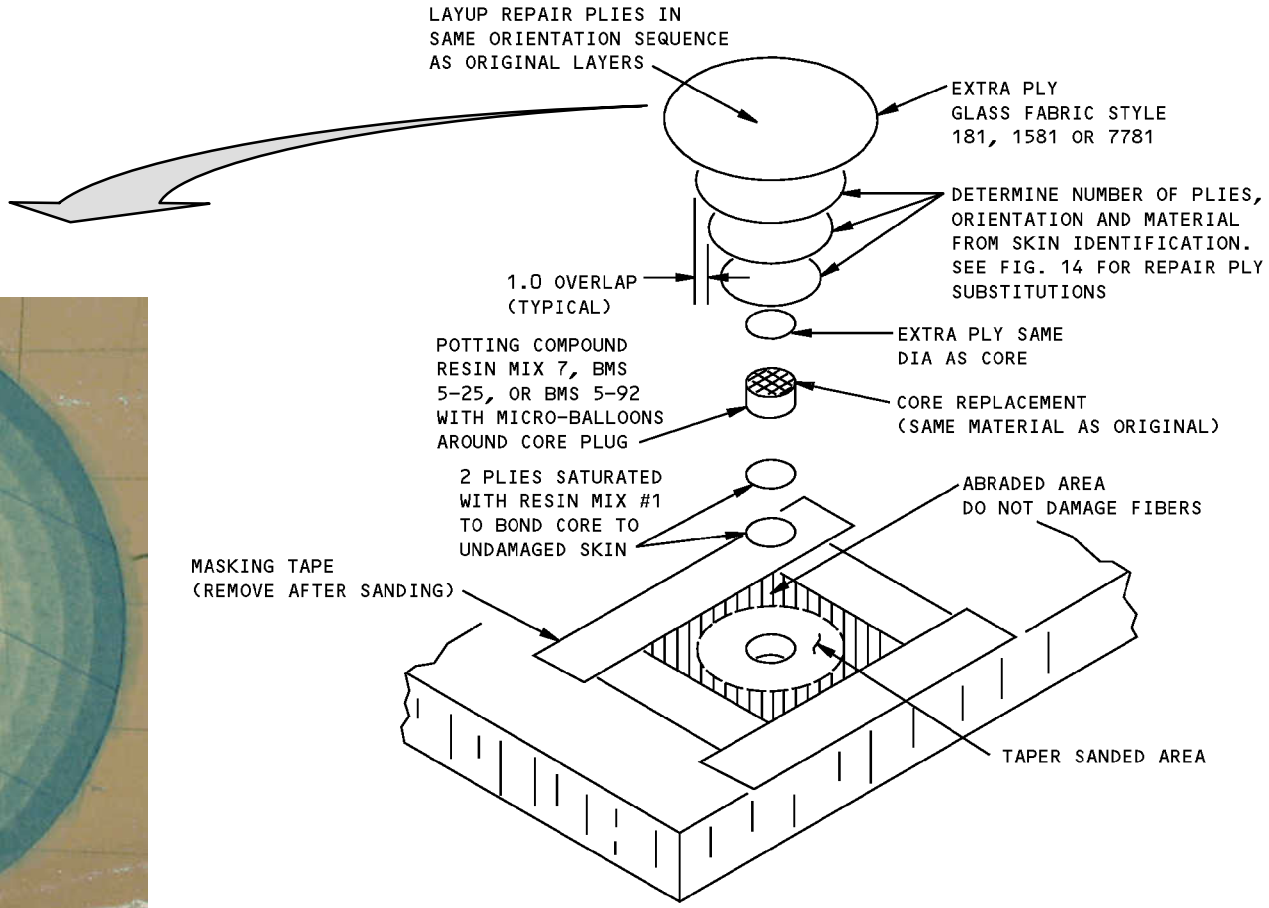

Figure 61 Repair of Covering and Honeycomb

FOR TRAINING PURPOSES ONLY!

© Lufthansa Technical Training

Repair through Injection of Resin

The repair through injection of resin is a approved repair for delamination or dissolving adhesives. If the damaged is caused by contamination or water absorption, this type of repair is not recommended.

Filling Repair

This repair is recommended for small damages of the honeycomb material.

The area is filled with thickened resin/hardener alloy and in the next step made plane. However, the repaired area has lost nearly the half of its original strength.

The maximal area is therefore defined by the original manufacturer with up to 12,5mm. Hence a direct bonding between the covering and the honeycomb material is preferred.

FOR TRAINING PURPOSES ONLY!

© Lufthansa Technical Training

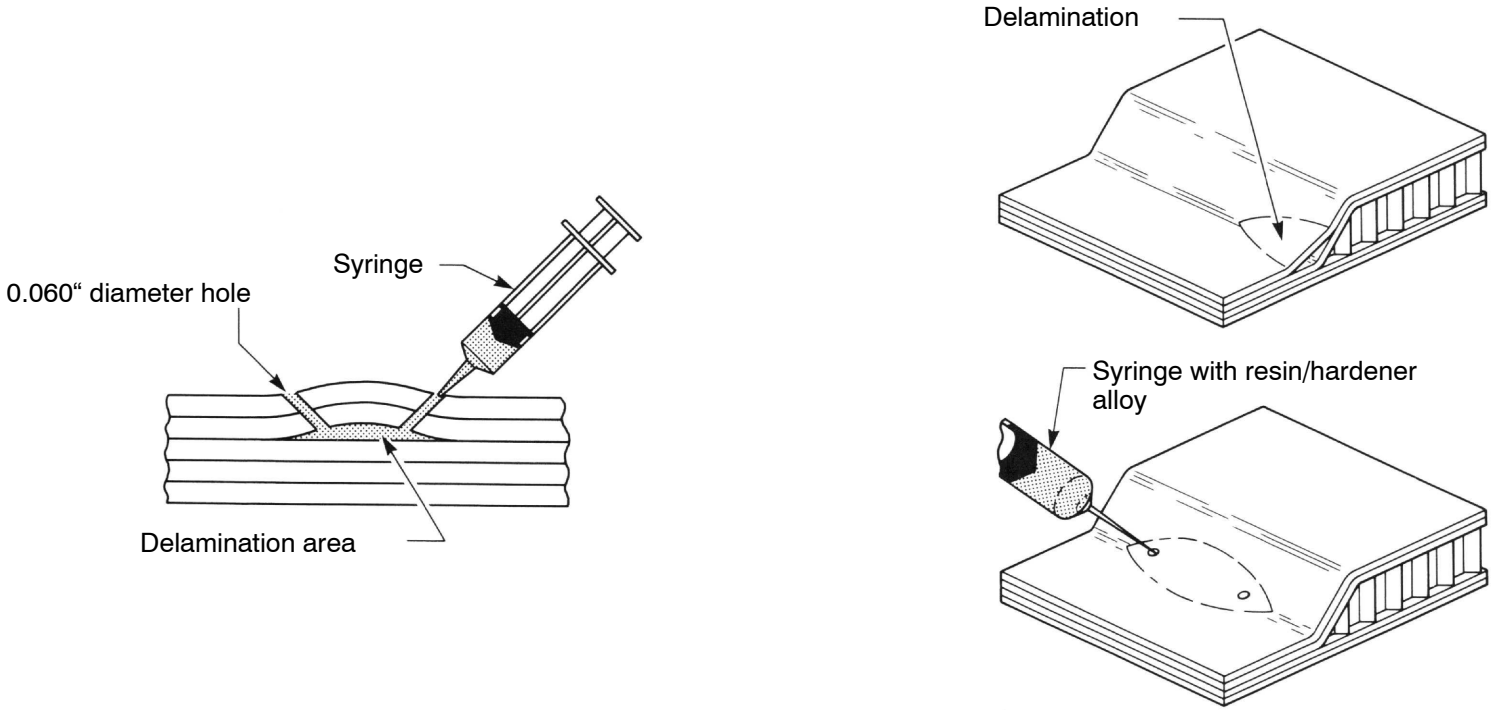

Figure 62 Resin Injection Repairs

FOR TRAINING PURPOSES ONLY!

© Lufthansa Technical Training

Preparation before Repair

General

Before any repair action can be performed, it is necessary to ensure that the surface of the repair area and the comb material, when damaged, has been cleaned and correctly prepared.

This contains:

- Removal of all contaminations
- Drying of the part (max 66–78˚C)
- Removal of the damaged material.

If the part is dryed with heat the maximal temperature gradient is 3˚C per minute to prevent delamination.

Cleaning of the surface

For cleaning only materials which do not damage the part any further are allowed. They have to be approved by the manufacturer. If cleaning liquids are used adjacent areas have to be protected with tape.

Cleaning of honeycombs

There are two different methods to clean honeycombs:

- Spraying with dissolver
- Dab with colvent based cleaners

FOR TRAINING PURPOSES ONLY!

© Lufthansa Technical Training

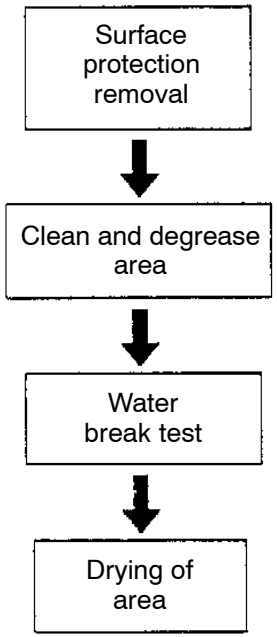

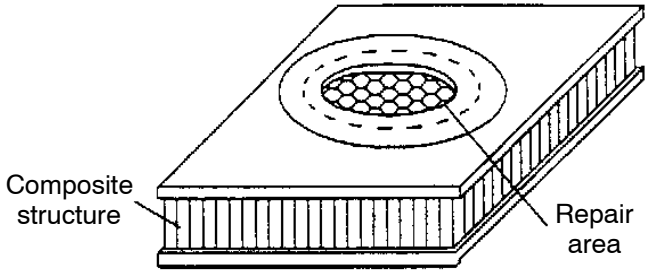

Figure 63 Area Preparation

FOR TRAINING PURPOSES ONLY!

© Lufthansa Technical Training

Removal of Surface Protection

All the surface protection (including paint and primer) is to be removed using mechanical methods only. Chemical strippers may cause deterioration of the resin.

WARNING: DO NOT USE CHEMICAL STRIPPERS
DO NOT ERODE LAMINATES

NOTE: Do not apply water directly to the surface, wet the cloth first.

FOR TRAINING PURPOSES ONLY!

© Lufthansa Technical Training

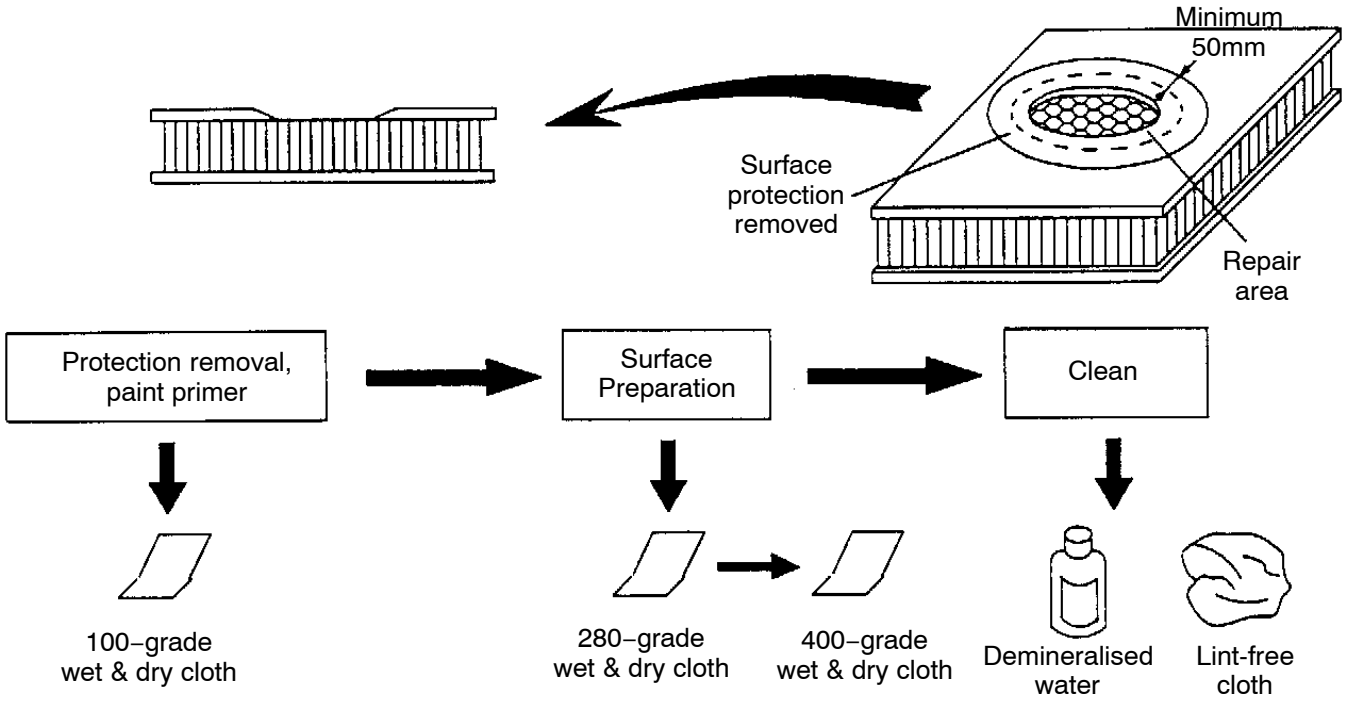

Figure 64 Removal of Surface Protection

FOR TRAINING PURPOSES ONLY!

© Lufthansa Technical Training

Cleaning and Degreasing

The repair surface needs to be cleaned and degreased, in order to ensure complete bonding of the repair.

NOTE: Do not apply cleaning agent directly on the repair surface, wet the cloth before.

WARNING: CLEANING AGENTS ARE DANGEROUS!

FOR TRAINING PURPOSES ONLY!

© Lufthansa Technical Training

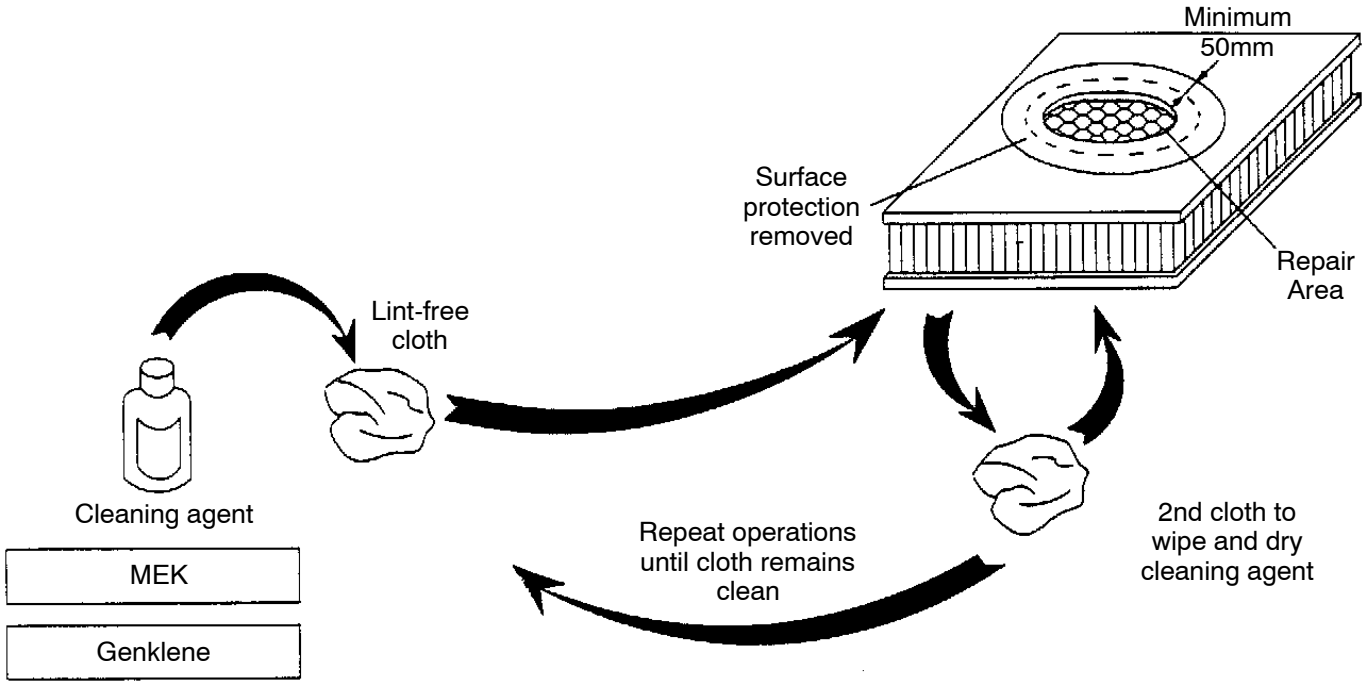

Figure 65 Cleaning and Degreasing

FOR TRAINING PURPOSES ONLY!

© Lufthansa Technical Training

Water Break Test

Correct cleaning and degreasing of the repair surface is to be checked by a water break test.

The test consists of spraying a thin layer of demineralised water on the repair surface and checking that the water remains in a thin continuous coating.

FOR TRAINING PURPOSES ONLY!

© Lufthansa Technical Training

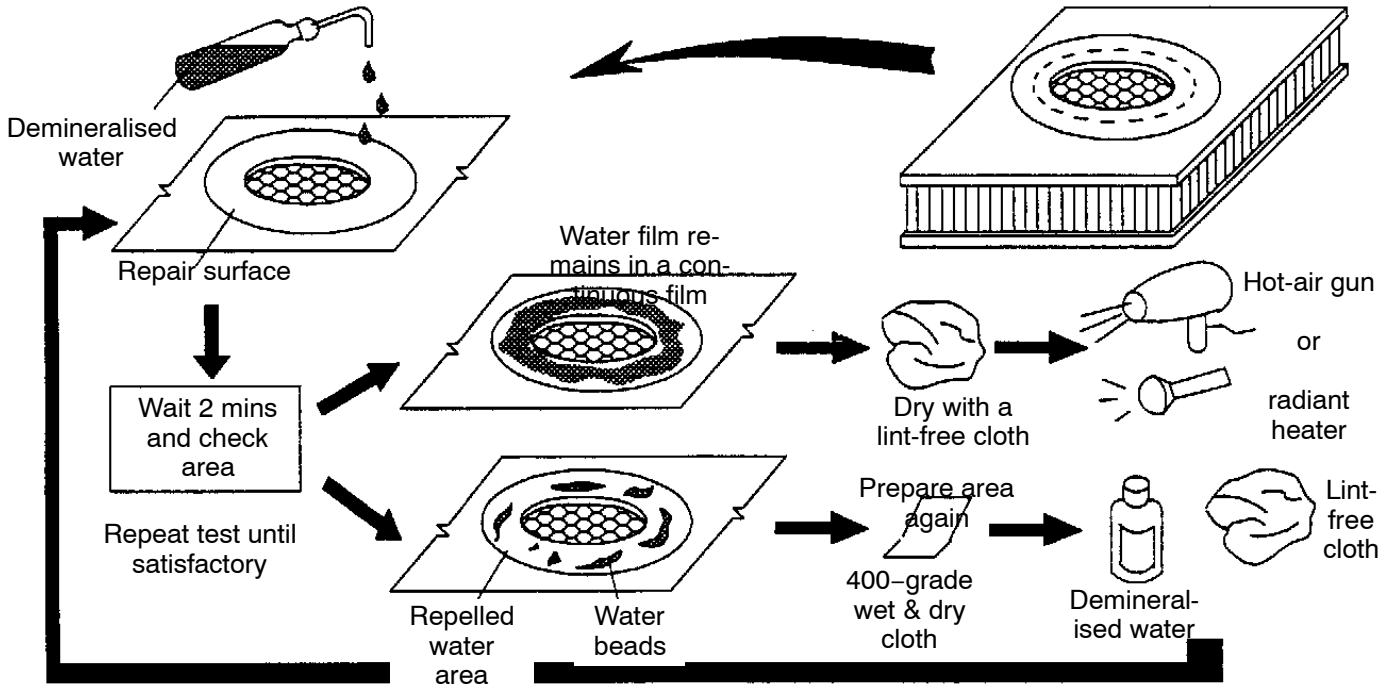

Figure 66 Water Break Test

FOR TRAINING PURPOSES ONLY!

© Lufthansa Technical Training

Wet Lay–Up

Wet lay–up consists of applying several layers of fabric material impregnated with resin onto the repair surface, in order to restore the damaged skin.

Previous to the lay–up operation, the fabric material is hand-impregnated with resin or adhesive. Repair layers (plies) are applied up to the surface following a specified sequence and cured at Room Temperature (RT).

Working With Resins and Catalysts

It is important to mix the resin system properly. If an improper mixture is used, it will not provide adequate strength.

Each part of the resin system is weighed before mixing. Always mix resin and hardener before adding any fillers.

The matrix formula for most advanced composites is very exacting. Mixing instructions are always included with the resin containers. This information may also be found in the aircraft SRM

A thoroughmixing action will help to achieve maximum strength.

Mixing should be done in a wax-free container.

3 - 5 minutes is usually required to thoroughly mix components.

Do not mix too quickly; small bubbles may rise into the air, getting into your hair or on your skin. Test the viscosity of the resin immediately after mixing by a drop test.

Pot Life

Do not mix large amounts together; this will cause an acceleration of the chemical reaction. The pot-life, the amount of time you have to work with the resins, will also be reduced. Some resin systems have very short pot lives (15 minutes), others have long pot lives (4 hours).

All resins cure by chemical reaction. It is important to consider how long it will take to use the amount of resin which has been prepared, so as not to exceed the pot life.

Shelf Life

The shelf life is the time which the product is still good in an unopened container and varies from product to product. If the shelf life is exceeded, the resin or catalyst must be discarded as the cure may not achieve sufficient strength.

Resin Rich

If too much resin is used, the part is called resin rich. This is undesirable, as it affects the strength of the composite by making the part brittle and adds extra weight (negating the reason for using composites in the first place).

Working In Resin

When working resin into the fibres, take care not to distort the weave of the fabric. If the fibres pull apart, the strength characteristic of the fabric will diminish.

Resin Kits

TYPE OF RESIN TYPE OF CATALYST
DATE OF MFG.05/04/88
POT LIFE: 30 MIN @ 70°F
MIX RATIO 100/16 A to B BY WEIGHT
CURE TEMP 007 DAYS @ 077°F
SHELF LIFE 12 Months @ 40°F FROM DOS

Pre-packaged resin kits carry a label that gives all pertinent information about the mix ratio and proper curing instructions for that particular material.

FOR TRAINING PURPOSES ONLY!

© Lufthansa Technical Training

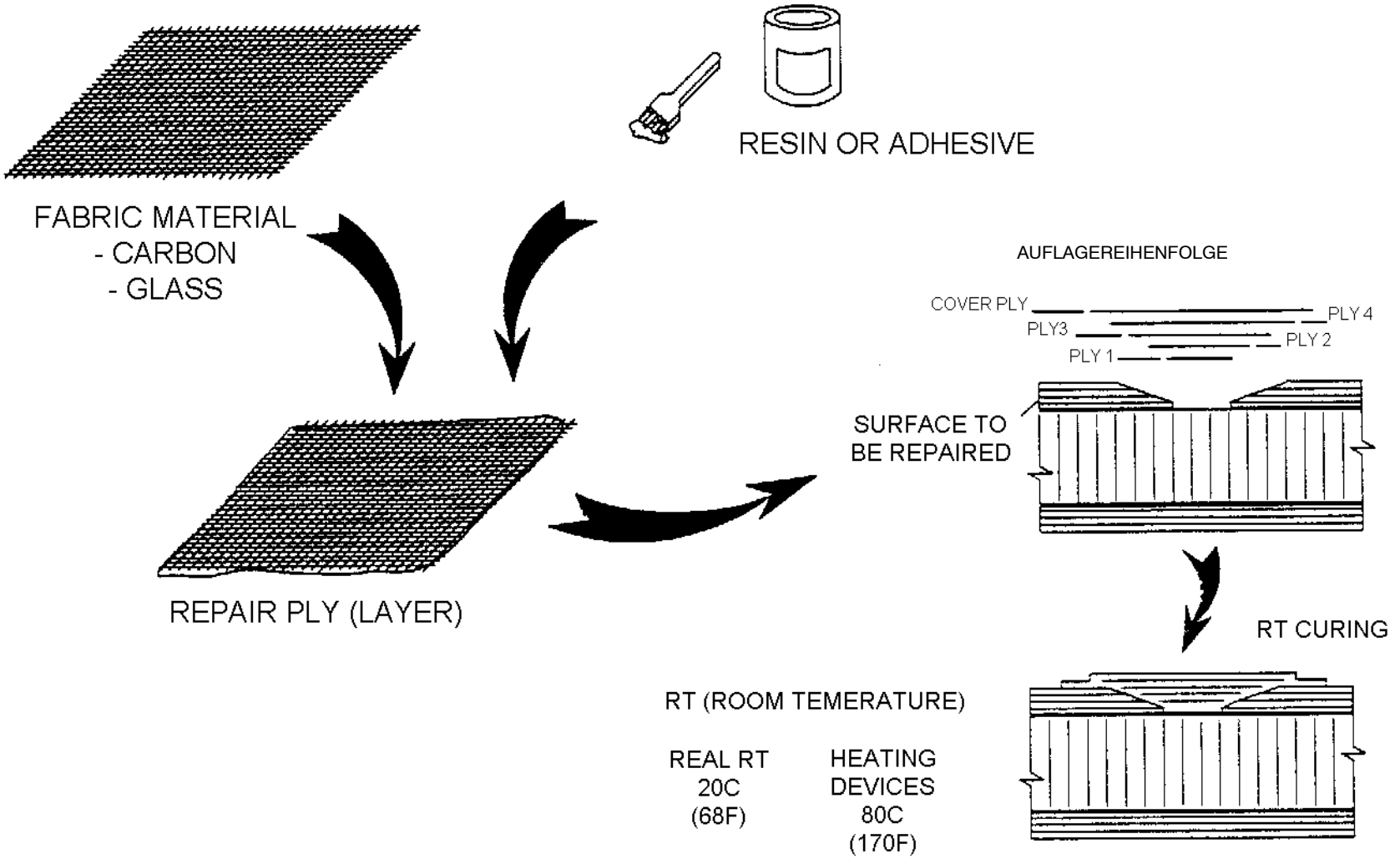

Figure 67 Wet Layup

FOR TRAINING PURPOSES ONLY!

© Lufthansa Technical Training

Applicable Wet Lay-Up Sequences

There are two methods to be used for the lay-up operation.
The applicable option will be specified in the repair instructions.

FOR TRAINING PURPOSES ONLY!

© Lufthansa Technical Training

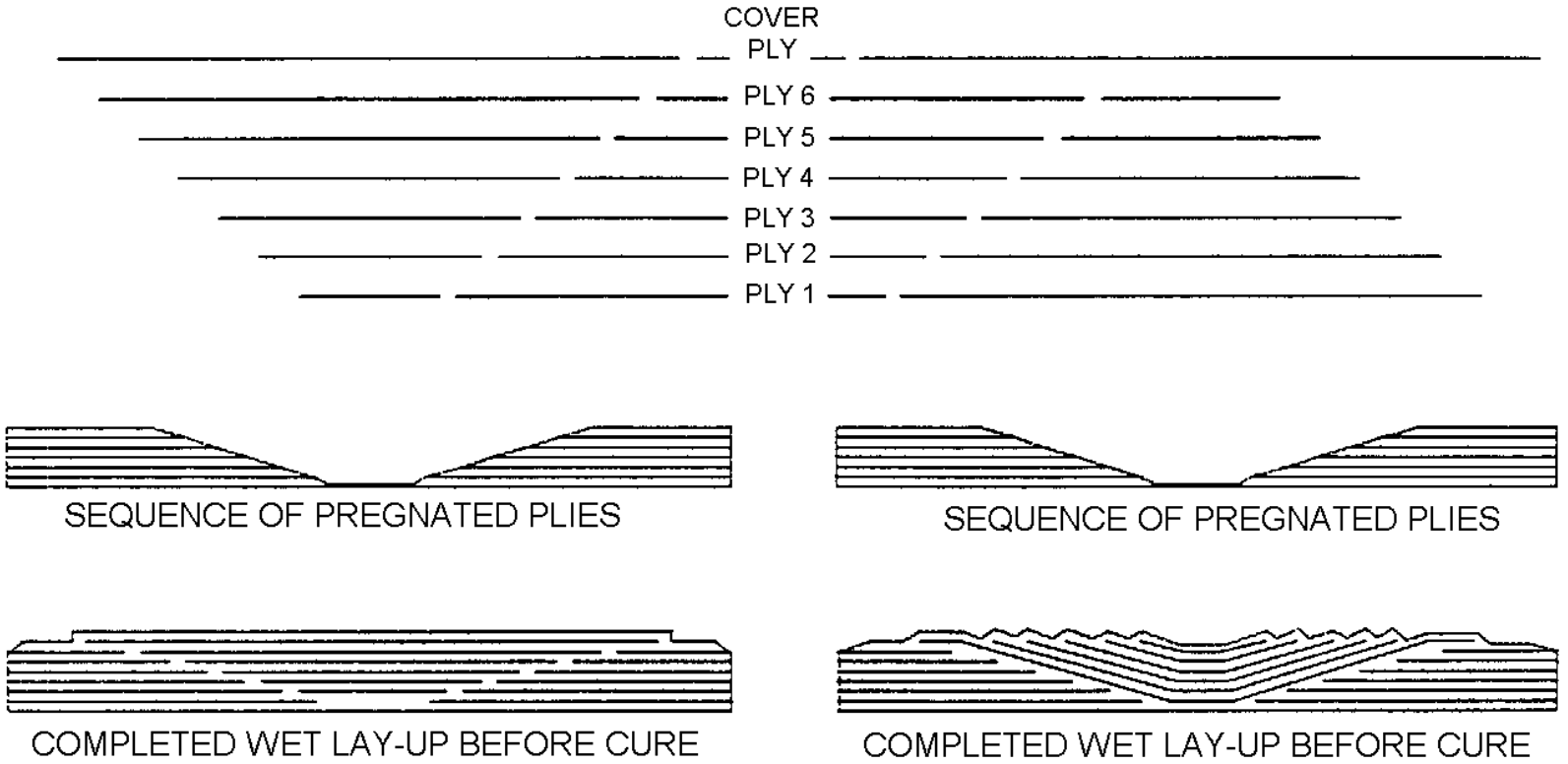

Figure 68 Wet Layup Sequence

FOR TRAINING PURPOSES ONLY!

© Lufthansa Technical Training

Vacuum Bagging

General

The technique of vacuum bagging is used in advanced composite repair for several reasons:

- to use atmospheric pressure to consolidate the layers in the laminated repair
- to remove trapped air and gases produced during curing
- to hold heater blankets, thermocouples and other materials in place during the curing cycle
- to produce the desired surface finish on the repair.

There is no universally-accepted method of vacuum bagging. Aircraft manufacturers have a variety of methods, but you should be aware of the purpose of each of the materials used. If you understand why each layer is used you will not have to remember how to bag up a repair for each type of aircraft.

Bagging Principles

Following principles must be obeyed, when vacuum bagging:

- The air and reactiongases inside a vacuum bag must have an easy path to the vacuum pump over the entire surface.
- The amount of resin lost from the plies must be kept to a minimum.
- It is necessary to ensure that none of the bagging materials adhere to the part.
- The heat blanket must be protected from resin contamination.

The figure opposite shows a typical vacuum bagging sequence specified by Boeing.

FOR TRAINING PURPOSES ONLY!

© Lufthansa Technical Training

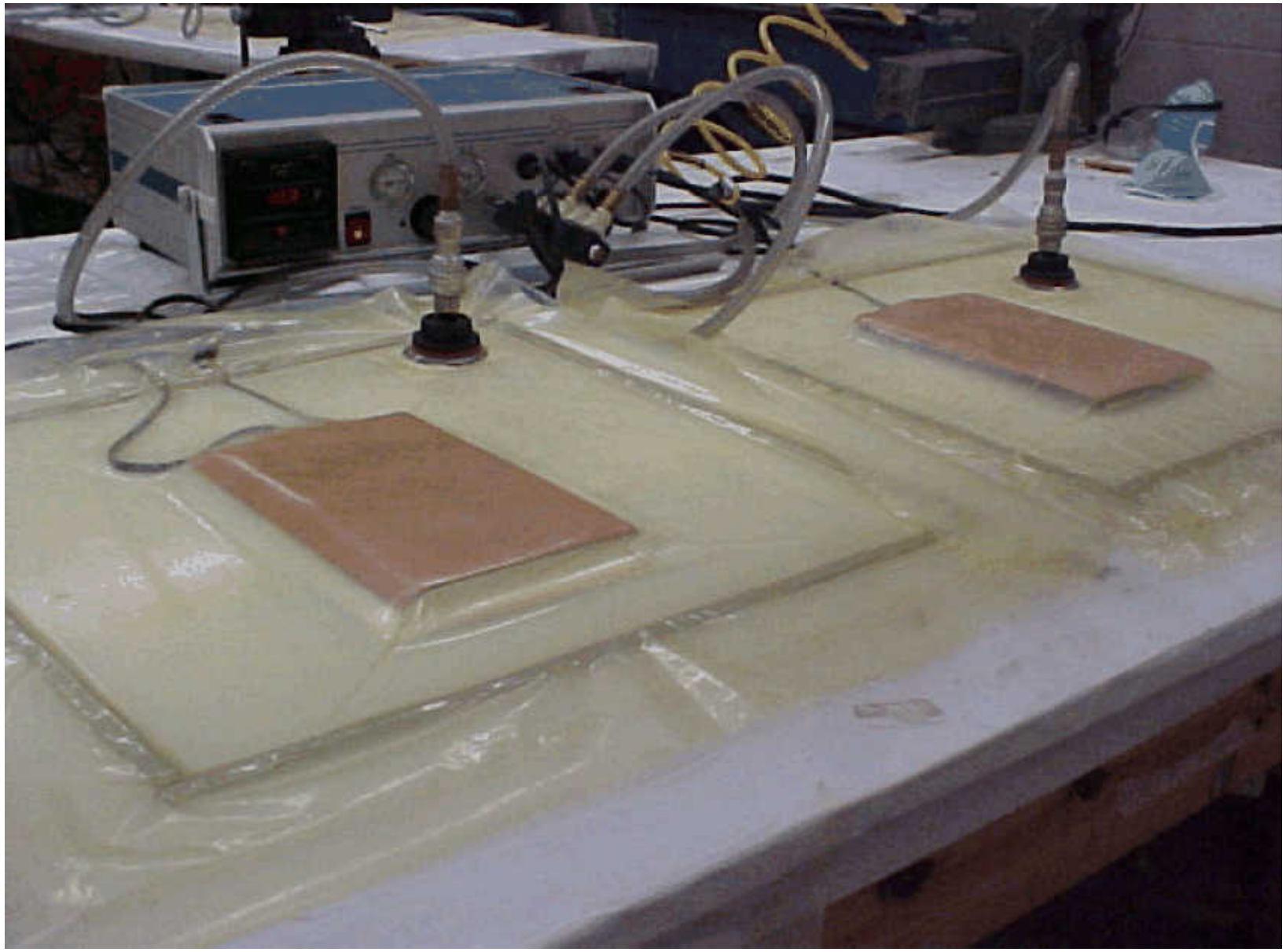

Figure 69 Vacuum Bagging

FOR TRAINING PURPOSES ONLY!

© Lufthansa Technical Training

Perforated Parting Film

Perforated parting film is also known as perforated FEP parting film or perforated release film.

This is a thin, non-stick film placed directly on the surface of the repair to prevent the bagging materials sticking to the repair surface. The film is perforated with small holes to allow air and gases to escape from the repair piles. The hole sizes vary from pin pricks to about 1mm diameter. Some resin will escape through the holes so, for repair, it is best to choose a film with pin-pricks to reduce the resin loss. Perforated parting film will produce a shiny, resin-rich surface on the repair.

Peel Ply

Also known as release fabric.

This is a thin, woven, nylon or polyester fabric which has a non−stick coating. It can be used instead of, or underneath, a perforated parting film.

Its main effect is on the surface finish of the repair.

During the curing of the repair, the peel ply becomes lightly bonded to the surface resin. When it is removed it peels off the surface resin leaving a rough finish. This produces a surface which can be painted or bonded without further sanding.

There are two potential disadvantages in using a peel ply:

- it absorbs some resin, and may lead to a resin-starved repair
- it may contaminate the repair surface with its non−stick coating.

Bleeder Cloth

Also known as surface bleeder or bleeder fabric.

The function of this layer is to provide an easy path for air to escape and to absorb any resin which comes through the holes in the perforated parting film.

The bleeder cloth should be larger than the perforated parting film.

A number of types of bleeder material are available, including woven glass fibres, non-woven cloth and a felt type of material also known as breather fabric.

Non−Perforated Parting Film

Also known as solid parting film or release film.

This is placed on top of the bleeder fabric to prevent resin soaking through onto the other bagging materials and the heater blanket. This film should be larger than the heater blanket but must be smaller than the bleeder fabric, otherwise air will be trapped underneath with no escape path.

Breather Fabric

Also known as breather cloth or surface breather.

This is a thick, porous, non−woven material and is used over the entire repair surface to allow the air and gases to escape easily. It must be larger than all the non−porous materials used in the vacuum bag. The breech units must be placed on the breather fabric so that the air and gases have a free path to the vacuum pump.

Caul Plate

Also known as a pressure plate or pressure intensifier.

This is a thin metal plate which is placed between the breather fabric and the heater blanket. Its purpose is

- to help even-out the temperature over the entire repair
- to help even-out the pressure over the whole repair
- to improve the flatness of the surface of the repair.

Caul plates are suitable for flat or single-curvature panels, but not for complex shapes, where special tooling should be used instead.

In general, thin caul plates (<0.016”) work best, as thicker plates tend to trap air in the repair.

FOR TRAINING PURPOSES ONLY!

© Lufthansa Technical Training

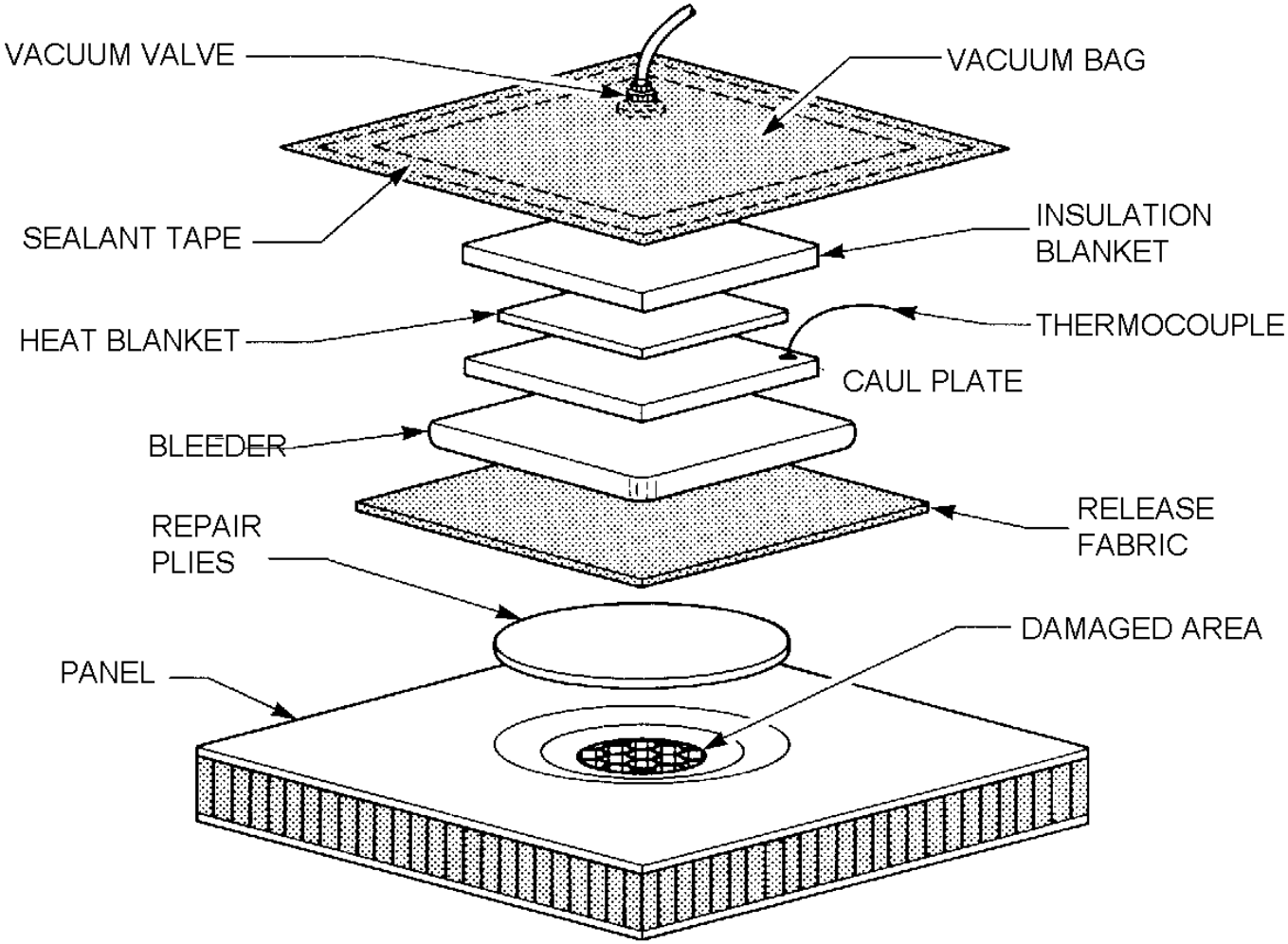

Figure 70 Typical Vacuum Bagging Operation

FOR TRAINING PURPOSES ONLY!

© Lufthansa Technical Training

Heater Blanket

Also known as heater mat.

The heater blanket is a silicone rubber pad which contains an electrical heating element. It is used to control the temperature of the repair during the warm-up, cure and cool-down stages of the repair. It is flexible and will bend to gentle curves. Heater blankets can be used for cures up to 350°F (175°C).

They are available in several power outputs, the most common being 3 and 5 watts per square inch. It is important to ensure that the voltage rating of the blanket matches the power source being used.

The heater blanket must be at least 2” (50mm) larger than the repair all the way round to ensure that the whole repair area is at an even temperature.

Insulation

Insulation in the form of breather fabric or glass cloth is normally placed on top of the heater blanket to reduce heat loss and to minimise the effects of draughts on the repair. It is often recommended that extra insulation on the outside of the vacuum bag is used to even out temperature variations on the repair surface.

Bagging Film

This is a nylon film which is sealed over the repair materials so that a vacuum can be applied. It is available in a variety of temperature resistance and elongation. The higher temperature-resistant films normally stretch less.

Bag Seating Tape

Also known as bagging tape or extruded sealing compound.

This material is a high temperature mastic type of tape and is used to seal the vacuum bag to the surface of the item under repair. It is available in a number of temperature ranges.

Vacuum Breech Units

Also known as through-bag units, vacuum probes or sniffers.

These are specially-designed connectors which pass through the vacuum bag and form a seal, so that the pipe to the vacuum pump can be connected. There are several designs.

Two breech units are normally used on a repair:

- one to remove the air from the vacuum bag and
- one to record the level of vacuum inside the bag.

It is important that the breech units are placed on opposite sides of the repair, are placed directly on to breather fabric and are not placed directly over any wires or heater blankets.

FOR TRAINING PURPOSES ONLY!

© Lufthansa Technical Training

THERMOCOUPLES

Also known as T/Cs or temperature probes.

A thermocouple consists of two wires, made from special alloys, which are welded together at one end. When the welded portion is heated it produces a small electrical current. By connecting the thermocouple to a hot bonder they can be used to record and control the temperature of a repair.

Thermocouples come in a variety of types, depending on the alloys used and are distinguished by letters (J-type, K-type etc). The most commonly-used thermocouples for hot bonding are J-type.

A number of thermocouples should be place around the repair to record and control the temperature accurately during curing. They should be placed near to, but not on, the repair. Boeing recommend the use of up to eight thermocouples for a repair.

Bad thermocouple connections are the most common cause of problems during the cure of a repair.

Flash Breaker Tape

Also known as flash tape, pressure sensitive tape, high temperature tape, PS tape.

This is a high-temperature tape which can be used for a large number of functions inside the vacuum bag. It will not be affected by high temperatures. It is the only type of tape which should be used on the surface of the heater blanket.

Thermocouple Mapping

Each cure cycle contains at least one ramp stage and dwell (soak) stage. The temperatures must be carefully controlled during these stages and maintained between predefined limits. Most modern hot bonders allow you to define upper and lower tolerance limits for each stage of the cure cycle and will sound an alarm or shut down if the limits are exceeded.

In ideal conditions all points beneath a heater blanket will heat up at the same rate and maintain the same dwell temperature, but in reality there will be a variation of temperatures across the component.

A variety of factors can lead to these variations, the most common being:

- variations in thickness of the component (ribs, bosses etc)
- external draughts
- inaccuracy of thermocouples
- cold or hot areas within the heater blanket
- leaks within the vacuum bag
- lack of insulation in some areas of the repair.

There is a trend for manufacturers to call for a number of thermocouples to be placed around the repair to monitor these variations during repair of their components. Boeing repair documents, for instance, require the continuous monitoring and control of eight thermocouples during metal-to-metal bonded repairs.

FOR TRAINING PURPOSES ONLY!

© Lufthansa Technical Training

CONTROL OF VARIATIONS IN TEMPERATURE

In most cases a repair will be heated by a single heater blanket using a number of strategically placed thermocouples. Since the whole area of the blanket is controlled together there is no facility to increase or decrease the heat input to different areas of the repair.

Control of local temperatures can only be achieved by increasing or decreasing heat loss from the area by addition or removal of insulation. Thus an accurate map of placing the thermocouples in a repair is essential so that when a thermocouple is recording a high or low temperature the exact location can be identified.

Always make a point of recording the positions and numbers of the thermocouples in a repair. This can be done on a separate map or on the vacuum bag itself.

FOR TRAINING PURPOSES ONLY!

© Lufthansa Technical Training

THIS PAGE INTENTIONALLY LEFT BLANK

FOR TRAINING PURPOSES ONLY!

© Lufthansa Technical Training

M6.3.2 WOODEN STRUCTURES

CONSTRUCTION METHODS OF WOODEN AIRFRAME STRUCTURES

Wooden Wing Construction

Truss-Type Wing Construction

Fabric-covered aircraft wings have a truss-type structure that has changed very little throughout the evolution of aircraft.

Spars

The main lengthwise members in a wing are the spars. Wood spars are usually made from Sitka spruce and may be either solid or laminated.

Because of the difficulty in getting a single piece of near-perfect wood of the size needed for wing spars, many manufacturers use laminated spars, in which strips of wood are glued together with their grain running in the same direction. A properly laminated spar has essentially the same strength as that of a solid spar, yet it is considerably less expensive.

Compression Members

The spars are separated by compression members (or compression joints) that may be either steel tubing or heavy-wall aluminium alloy tubing. Compression ribs are sometimes used - ribs that have been specially strengthened to take compressive loads.

Wires

The truss is held together with high-strength solid steel wires that cross the bays formed by the compression struts. The wires that extend from the front spar inboard to the rear spar outboard oppose the forces that tend to drag against the wing and pull it backwards; these are called drag wires.

The wires that attach to the rear spar inboard and go to the front spar outboard are called anti-drag wires, since they oppose any force that tends to move the tip of the wing forward.

A wing truss consisting of spars, compression members and drag and anti-drag wires, when correctly assembled and rigged, provides the lightweight and strong foundation needed for a wing.

FOR TRAINING PURPOSES ONLY!

© Lufthansa Technical Training

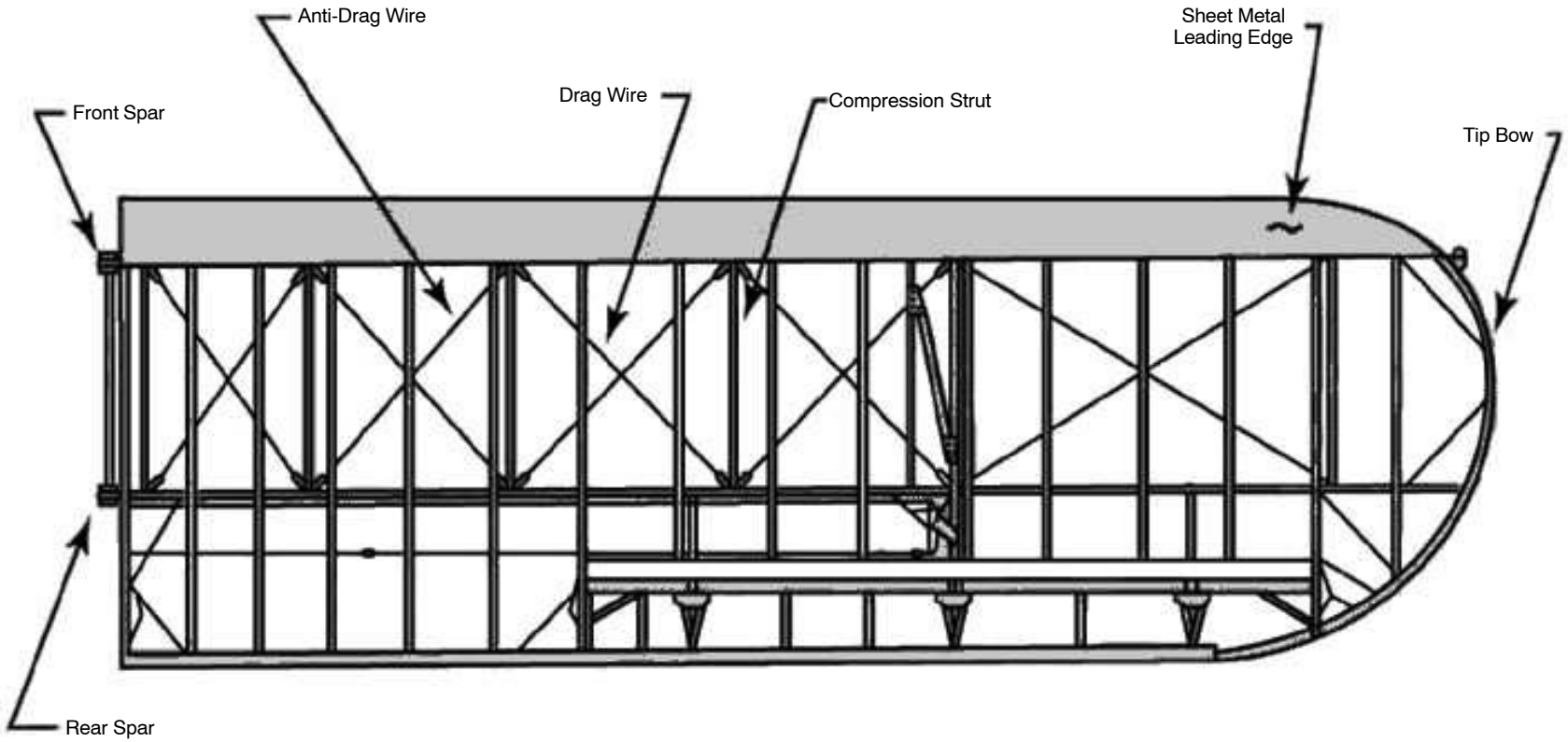

Figure 71 Truss-Type Wing

FOR TRAINING PURPOSES ONLY!

© Lufthansa Technical Training

Box Spar

General

An adaptation of the truss-type wing is one using a box spar. This was pioneered in World War 1 on some of the all-metal Junkers aircraft and the wood and fabric Fokker triplane.

Buildup

A box structure built between the spars stiffens the spars so they can carry all of the bending and torsional loads to which the wing is subjected in flight.

The former ribs in the wing attach to the spars to give the wing the aerodynamic shape it needs to produce lift when air flows over its fabric covering.

Most of the one-decker constructions made from wood have box shaped spars with long upper and lower belts (“spar booms“), which are linked with wooden bars (“plywood webs“).

The upper and lower belts can consist out of glued and laminated wood sheets with blocks of wood glued between them, which strengthens the compression members.

FOR TRAINING PURPOSES ONLY!

© Lufthansa Technical Training

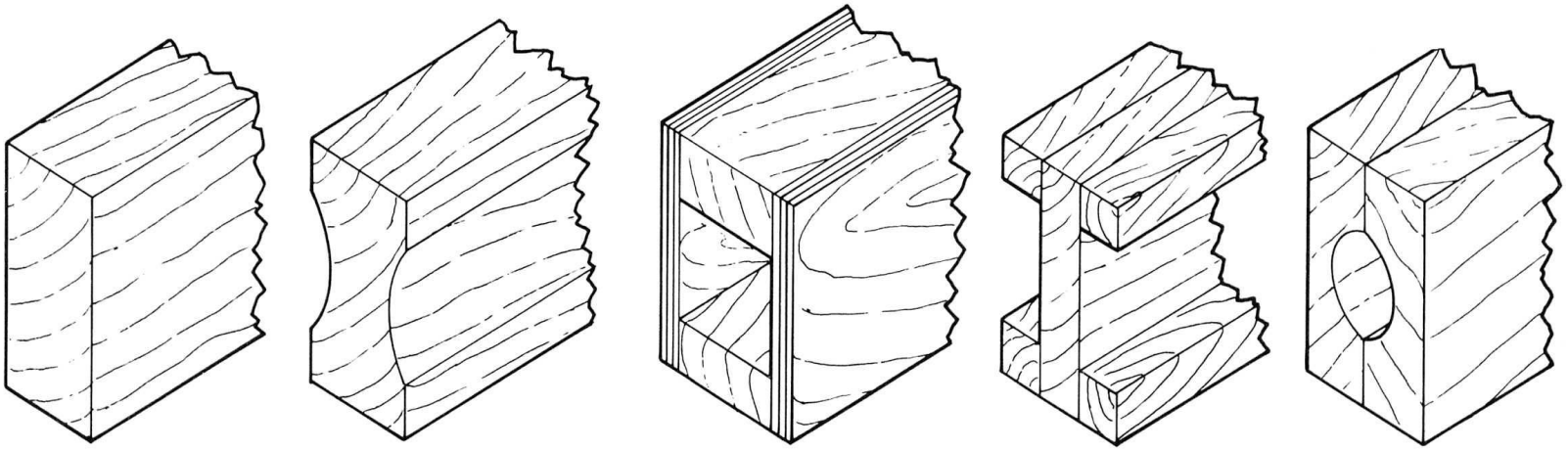

Solid Wood Rectangular | Routed I-Beam | Built-Up Box | Built-Up I-Beam | Internally Routed Box



A built-up wing rib constructed from wood.

Wing with box spar and added ribs

Figure 72 Spars for Fabric-Covered Truss-Type Wings

FOR TRAINING PURPOSES ONLY!

© Lufthansa Technical Training

Inspection of Wooden Structures

General

This section gives guidance on the inspection of wooden aircraft structures for evidence of deterioration of the timber and glued joints.

Glued Structures

Provided that protective varnish was applied to all exposed wood surfaces after gluing and satisfactorily maintained during the life of an aircraft, rapid deterioration of timber and glued joints would be unlikely.

Furthermore access to internal structure is often difficult or even impossible and deterioration takes place for a variety of reasons.

Some of the main factors which may cause deterioration are:

- Chemical reactions of the glue itself due to ageing or moisture, to extremes of temperature or to a combination of these factors
- Mechanical forces due mainly to timber shrinkage
- Development of microbiological growths (i.e. fungus)
- Oil percolating from the engine installation
- Fuel contamination due to system leaks or spillage in the tank bays
- Blockage of water drainage holes.

Aircraft which are exposed to large cyclic changes of temperature and humidity are especially prone to timber shrinkage, which in turn may lead to glue deterioration. The amount of movement of timber members due to these changes varies with the volume of each member, the rate of growth of the tree from which the timber was cut and the way in which the timber was converted.

Thus, two major members in an aircraft structure, secured to each other by glue, are unlikely to have identical characteristics and differential loads will, therefore, be transmitted across the glue film with changes of humidity. This will impose stresses in the glued joint which, in temperate zones, can normally be accommodated when the aircraft is new and for some years afterwards.

However, with age the glue tends to deteriorate, even when the aircraft is maintained under ideal conditions.

The stresses at the glued joint, due to changes in atmospheric conditions, may cause failure of the joint.

The main spars carry most of the loads in flight and are, at times, subject to flexing. The glued joints should, therefore, be free from deterioration but, unless the spar is dismantled or holes cut in the webs, internal inspection may be virtually impossible.

Splits in the proofed fabric covering on plywood surfaces should be investigated by removing the defective fabric in order to ascertain whether the ply skin beneath is serviceable. It is common for a split in the ply skin to be the cause of a similar defect in the protective fabric covering.

Fabric having age cracks and thick with repeated dopings, may indicate that the structure underneath has not been critically examined for a considerable time. Insertion patches in the fabric could also indicate that structural repairs have been made at that point.

Whilst a preliminary survey of the external structure may be useful in roughly assessing the general condition of the aircraft, it should be noted that timber and glue deterioration often takes place inside a structure without any external indications. Where moisture can enter a structure, it will tend to find the lowest point, where it will stagnate and promote rapid deterioration.

FOR TRAINING PURPOSES ONLY!

© Lufthansa Technical Training

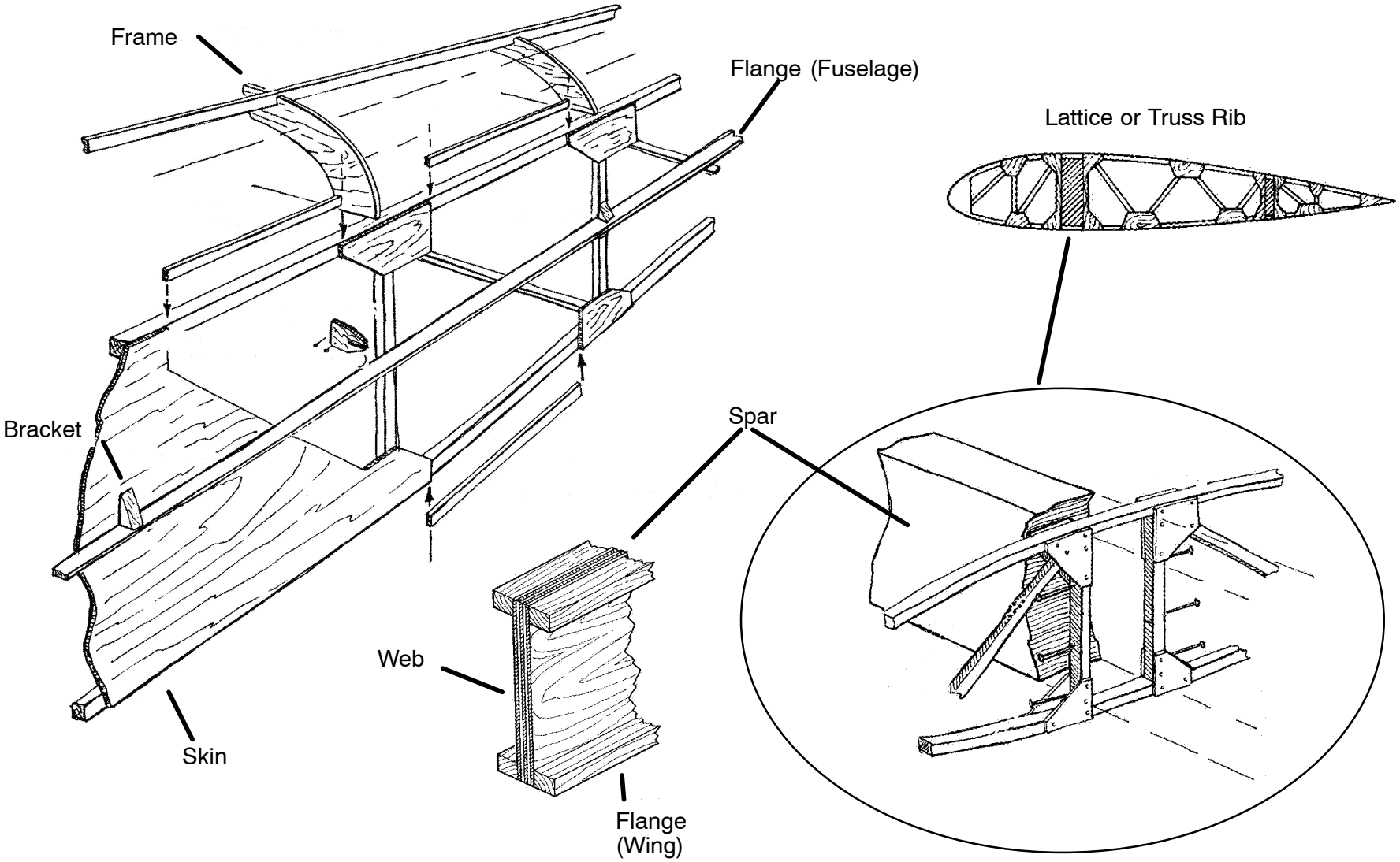

Figure 73 Wood Construction Methods

FOR TRAINING PURPOSES ONLY!

© Lufthansa Technical Training

TYPES OF DEFECTS AND DETECTION IN WOOD MATERIAL AND WOODEN STRUCTURES

INSPECTION OF WOODEN STRUCTURE

Steps before Inspection

Before commencing a detailed examination of an aircraft structure, the aircraft should be inspected externally for signs of gross deformation, such as warped wing structures, tail surfaces out of alignment or evidence of obvious structural failure. In some cases of advanced deterioration this assessment may be sufficient to pronounce the aircraft beyond economical repair and thus avoid further work.

Whenever possible the aircraft should be housed in a dry, well ventilated hangar and all inspection panels, covers and hatches removed before continuing with the survey. The aircraft should be thoroughly dried out before examining glued joints or carrying out repairs.

Immediately after opening the inspection panels, etc., each component should be checked for smell. A musty smell indicates fungoid growth or dampness and, if present, necessitates further examination to establish which areas are affected.

Inspection of fuselage from outside

Where single skin plywood structures are concerned, some slight sectional undulation or panting between panels may be permissible provided the timber and glue is sound. However, where such conditions exist, a careful check must be made of the attachment of the ply to its supporting structure and moderate pressure with the hand, to push the ply from the structure, should be used.

Inspection of wings from outside

Where there are access panels or inspection covers on the top surfaces of wings or tailplane, care is necessary to ensure that water has not entered at these points where it can remain trapped to attack the surrounding structure.

Fabric having age cracks and thick with repeated dopings, may indicate that the structure underneath has not been critically examined for a considerable time. Insertion patches in the fabric could also indicate that structural repairs have been made at that point.

Before the final decision about the general condition of the aircraft is made it is important to make a penetrant inspection of the whole aircraft structure and some special components e.g. horizontal stabilizer. Thus the aircraft can be generally in a good condition but the control surfaces can be damaged heavily.

FOR TRAINING PURPOSES ONLY!

© Lufthansa Technical Training

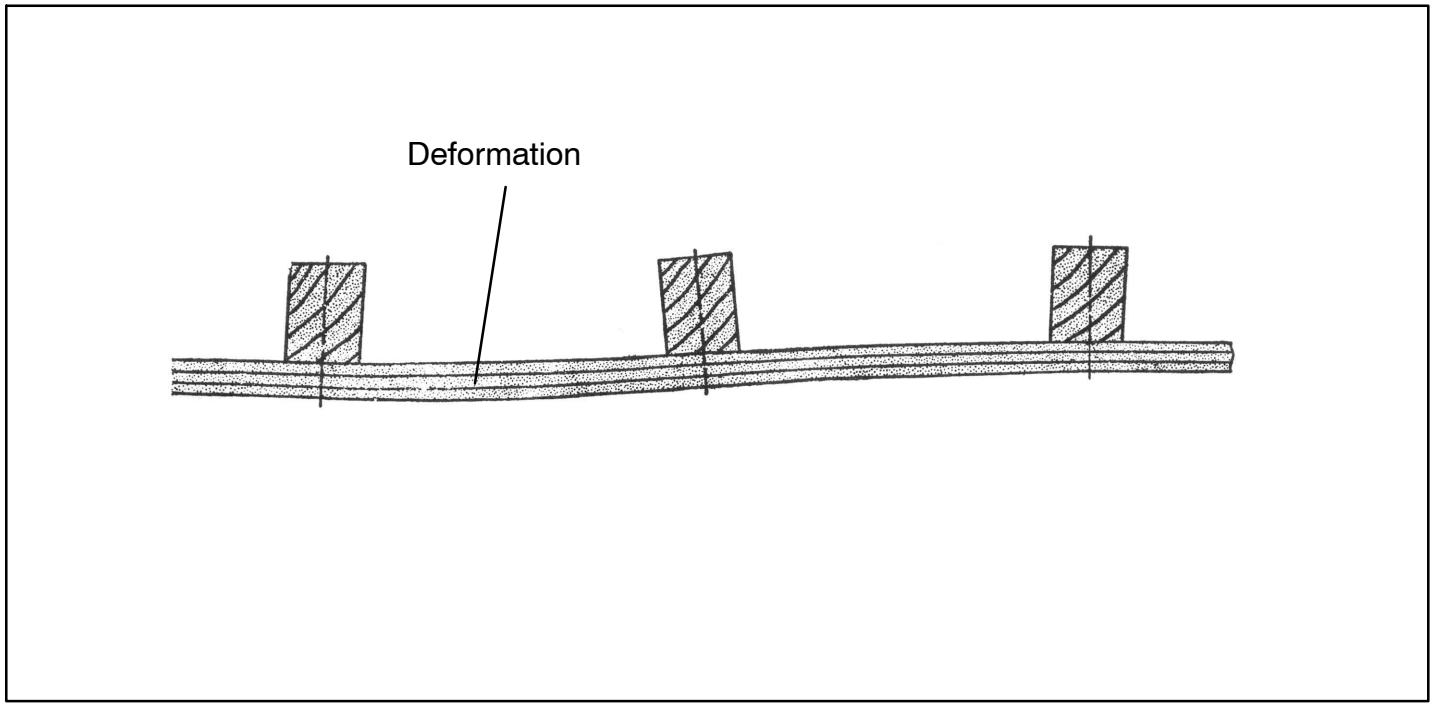

single skin plywood structure

Figure 74 Example of a Deformed Single Skin Structure

FOR TRAINING PURPOSES ONLY!

© Lufthansa Technical Training

INSPECTION OF WOODEN STRUCTURE (CONTD.)

Inspection of Timber and Glued Joints

The inspection of a complete aircraft for glue or wood deterioration will necessitate checks on remote parts of the structure which may be known, or suspected trouble spots and, in many instances, are boxed in or otherwise inaccessible.

In such instances, considerable dismantling is required and it may be necessary to cut access holes in ply structures to facilitate the inspection; such work must be done only in accordance with the repair manual for the aircraft concerned.

After the inspection has been completed, the structure must be made good and protected in an approved manner.

Access Holes

In general, access holes are circular in shape and should be cut with a sharp trepanning tool to avoid jagged edges. It is essential to avoid applying undue pressure to the tool, especially towards the end of the cut, otherwise damage may be caused to the inner face of the panel by stripping off the edge fibres or the ply laminations.

Where rectangular access holes are prescribed care is necessary to ensure that they are correctly located and that corner radii are in accordance with drawing requirements. The edges of all access holes must be smoothed with fine glasspaper, preferably before inspection is commenced, since contact with the rough edges may cause wood fibres to be pulled away.

Glue Line

When checking a glue line (i.e. the edge of the glued joint) for condition, all protective coatings of paint should be removed by careful scraping; it is important to ensure that the wood is not damaged during the scraping operation and scraping should cease immediately the wood is revealed in its natural state and the glue line is clearly discernible.

The inspection of the glue line is often facilitated by the use of a magnifying glass. Where the glue line tends to part or where the presence of glue cannot be detected or is suspect, then, providing the wood is dry, the glue line should be probed with a thin feeler gauge

If any penetration with the feeler gauge is possible, the joint should be regarded as defective.

NOTE: It is important to ensure that the surrounding wood is dry, otherwise a false impression of the glue line would be obtained due to closing of the joint by swelling.

In instances where pressure is exerted on a joint, either by the surrounding structure or by metal attachment devices such as bolts or screws, a false impression of the glue condition could be obtained unless the joint is relieved of this pressure before the glue line inspection is carried out.

The choice of feeler gauge thickness will vary with the type of structure, but a rough guide is that the thinnest possible gauge should be used. The figure opposite indicates the points where checks with a feeler gauge should be made.

FOR TRAINING PURPOSES ONLY!

© Lufthansa Technical Training

u

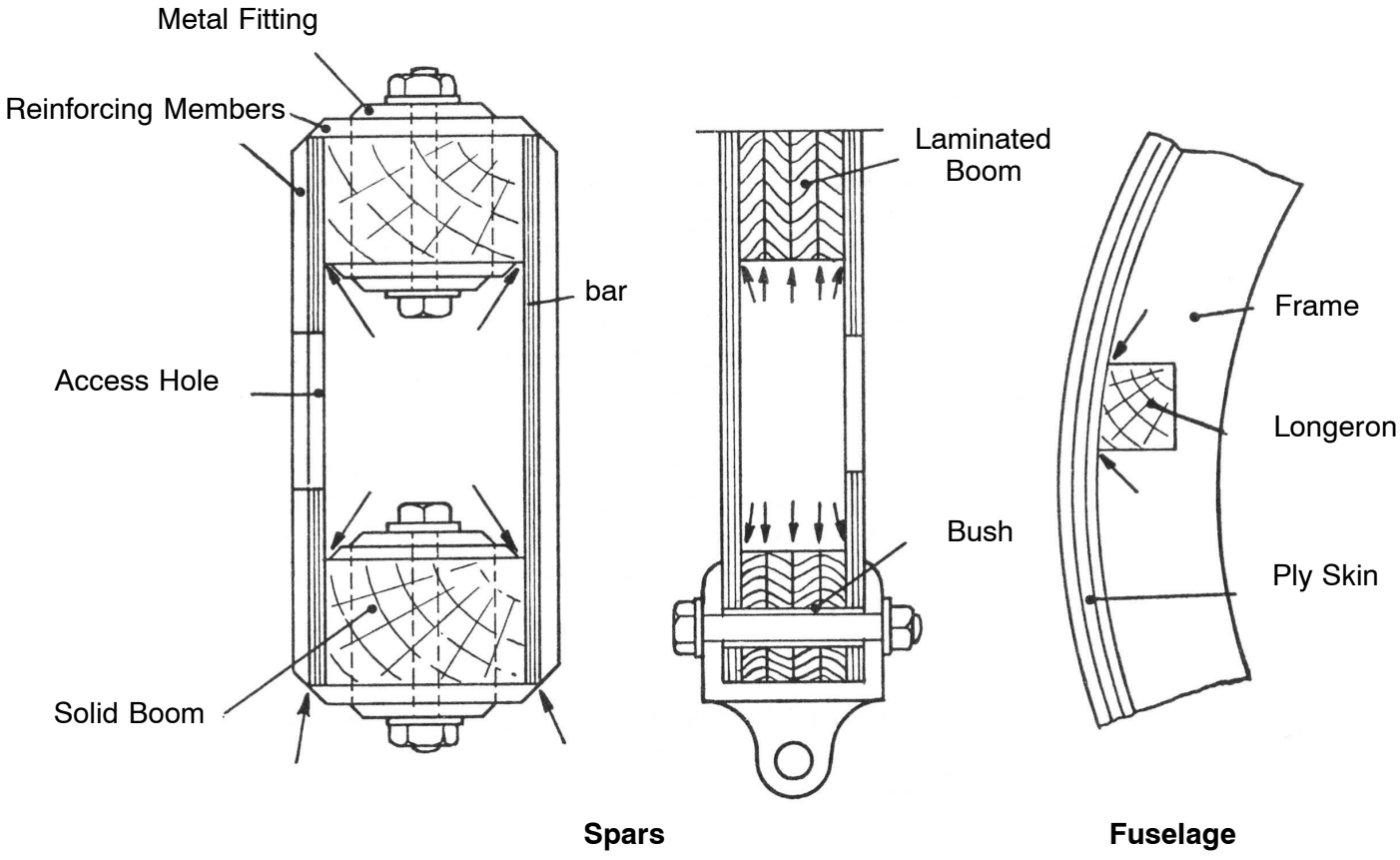

Arrows indicate positions to check with feeler gauge

Figure 75 Glue Line Checks

FOR TRAINING PURPOSES ONLY!

© Lufthansa Technical Training

INSPECTION OF WOODEN STRUCTURE (CONTD.)

Timber Condition

Dry rot and wood decay are not usually difficult to detect. Dry rot is indicated by small patches of crumbling wood.

A dark discolouration of the wood surface or grey streaks of stain running along the grain are indicative of water penetration.

Water Penetration of Structure

In some instances where water penetration is suspected, the removal of a few screws from the area in question will reveal, by their degree of corrosion, the condition of the surrounding joint.

- Slight corrosion of the screw due to the adhesive will occur following the original construction, therefore, the condition of the screw should be compared with that of a similar screw, removed from another part of the structure known to be free from water soakage.
- Plain brass screws are normally used for reinforcing glued wooden members, although zinc coated brass is sometimes used. Where hard woods such as mahogany or ash are concerned, steel screws are sometimes used. Unless otherwise specified by the aircraft constructor, it is usual to replace screws with new screws of identical length but one size larger.
- Experience of a particular aircraft will indicate those portions of the structure most prone to water penetration and moisture entrapment (e.g. at window rails or the bottom lower structure of entry doors), but it must be borne in mind that this is not necessarily indicative of the condition of the complete aircraft.
- Where drain holes have become blocked, water soakage will invariably be found. Drain holes should be cleared during routine maintenance.

FOR TRAINING PURPOSES ONLY!

© Lufthansa Technical Training

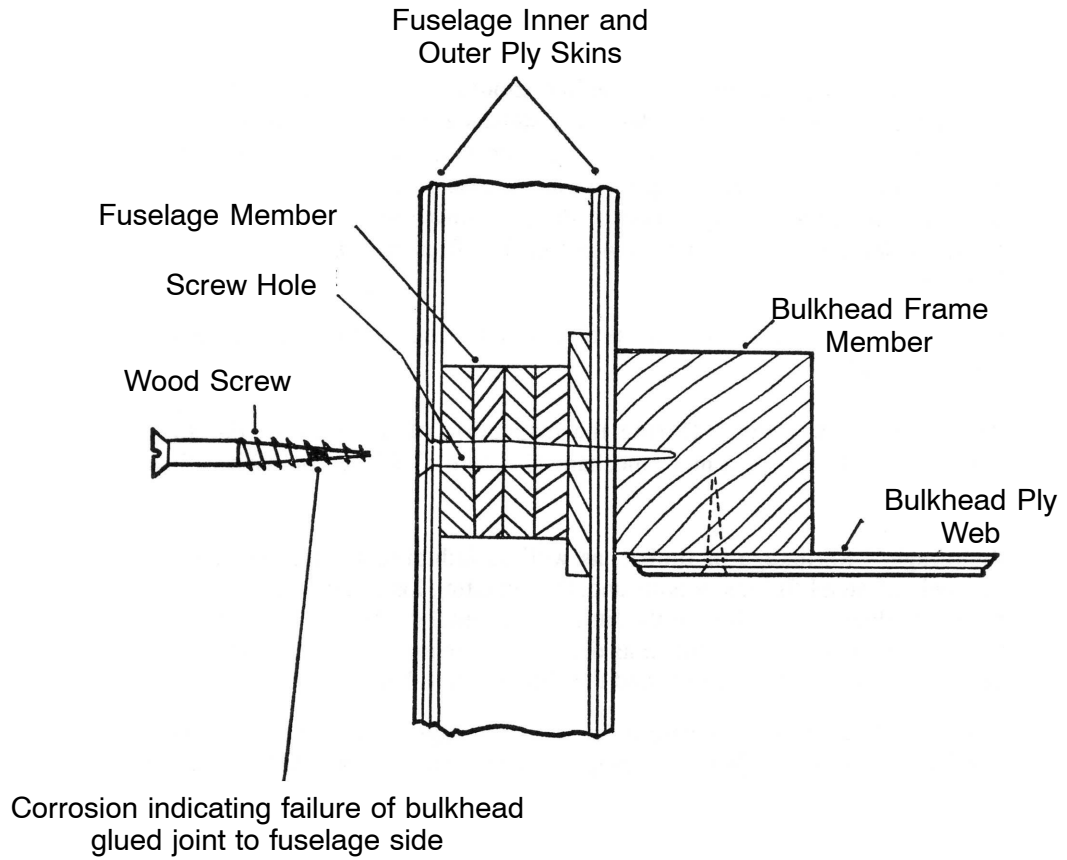

Figure 76 Check for Water Penetration

FOR TRAINING PURPOSES ONLY!

© Lufthansa Technical Training

Miscellaneous Defects

During the inspection of the aircraft, the structure should be examined for other defects of a more mechanical nature. Guidance on such defects is given in the following paragraphs.

- **Shrinkage**
  - Shrinkage of timber, as well as inducing stresses in glued joints, can cause looseness of metal fittings or bolts and, if fluctuating loads are present, can result in damage to the wood fibres at the edges of the fittings or around the bolt holes.
  - Shrinkage can be detected by removing any paint or varnish and attempting to insert a thin feeler gauge between the timber and the fitting or bolt head.
- **Elongated Bolt Holes**
  - Where bolts secure fittings which take load–carrying members, or where the bolts are subject to landing or shear loads, the bolt holes should be examined for elongation or surface crushing of the wood fibres. The bolts should be removed to facilitate the examination and, in some cases, the bolt itself may be found to be strained. Rectification of elongated bolt holes must be carried out in accordance with the approved Repair Manual, the usual method being to open out the holes and fit steel bushes.
- **Bruising and Crushing**
  - A check should be made for evidence of damage such as bruises or crushing of structural members, which can be caused, for example, by overtightening bolts. Repair schemes for such damage are governed by the extent and depth of the defect.
- **Compression Failures**
  - Compression failures, sometimes referred to as compression 'shakes', are due to rupture across the wood fibres. This is a serious defect which at times is difficult to detect and special care is necessary when inspecting any wooden member which has been subjected to the abnormal bending or compression loads which may occur during a heavy landing In the case of a member having been subjected to an excessive bending load, the failure will appear on the surface which has been compressed, usually at a position of concentrated stress such as at the end of a hardwood packing block; the surface subjected to tension will normally show no defects. The surface subjected to tension will normally show no defects. In the case of a member taking an excessive direct compression load, the failure will usually be apparent on all surfaces. Where a compression failure is suspected, a hand torch shone along the member, with the beam of light running parallel to the grain, will assist in revealing this type of failure.
- **Previous Repairs**
  - When examining a structure for signs of the defects mentioned above, particular attention should be paid to the integrity of repairs which may have been carried out previously.

Damage caused by a heavy landing may be found some distance away from the landing gear attachment points. Secondary damage can be introduced by transmission of shock from one end of a strut or bracing to its opposite end, causing damage well away from the point of impact. A thorough inspection of the existing paint or varnish at suspected primary or secondary impact points may reveal, by cracks or flaking, whether damage has actually occurred.

FOR TRAINING PURPOSES ONLY!

© Lufthansa Technical Training

THIS PAGE INTENTIONALLY LEFT BLANK

FOR TRAINING PURPOSES ONLY!

© Lufthansa Technical Training

CHARACTERISTICS, PROPERTIES AND TYPES OF WOOD AND GLUE

Selection and Construction of Timber Components

Introduction

A good basic knowledge combined with many years' experience in the handling of timber is essential for the accurate assessment of the characteristics and defects which make it either suitable or unsuitable for aircraft parts.

Seasoning

Timber which has been cut from selected trees is stacked, prior to shipment, for approximately 60 days. During this time, the timber loses much of its free moisture and it is in this condition that it should be transported.

Timber is usually seasoned in air–drying sheds for periods ranging from one to three years, or longer. If it is required for immediate use, it may be artificially seasoned (i.e., kiln–dried).

The process of seasoning reduces the moisture content of timber to a point where it is in equilibrium with the surrounding atmosphere and enables protective treatments to be applied more effectively.

FOR TRAINING PURPOSES ONLY!

© Lufthansa Technical Training

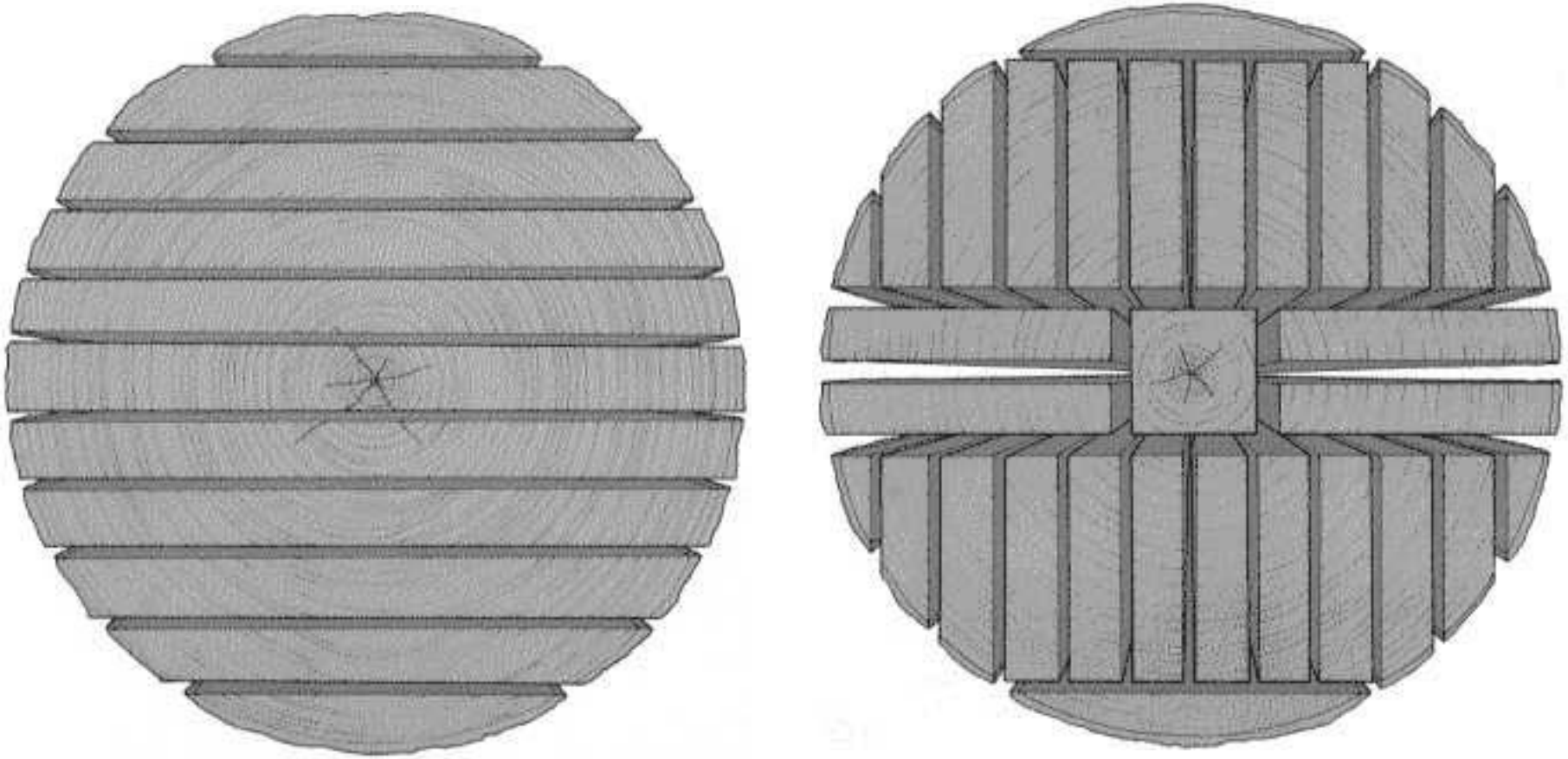

Horizontally sawed log

Log sawn in quater pieces

Figure 77 Division of Rough Material

FOR TRAINING PURPOSES ONLY!

© Lufthansa Technical Training

Characteristics of timber

After the timber has been properly seasoned, samples should be cut and tested to determine its suitability for use on aircraft.

Before taking the samples from a plank of timber, approximately 6 inches (15 cm) should be cut from the end and discarded as this piece may be drier than the remainder.

Determination of the moisture content

The moisture−content of the sample should be determined by weighing it and then drying it in an oven at a temperature of 100 - 105°C (212°F - 221° F) until two successive weigthings yield the same result.

Care should be taken to ensure that when the sample is split up, no material is lost and that the weighing is done promptly so as to avoid false results. The moisture content should be calculated from the following formula:

- $\frac{(W_1 - W_2)}{W_2} \times 100$

where W_1 = the weight of the sample prior to drying and

W_2 = the weight of the sample after drying.

A quicker method of determining the moisture−content of timber is by the use of the Marconi Moisture Meter. This instrument will record the moisture−content in a few seconds, whereas the method of weighing, drying and calculating takes much longer.

For general guidance, the correct moisture−content should be 15% with a tolerance of +/-2.

FOR TRAINING PURPOSES ONLY!

© Lufthansa Technical Training

The Felled Log
As the log dries out, its circumference shrinks most along the lines of its annual rings.

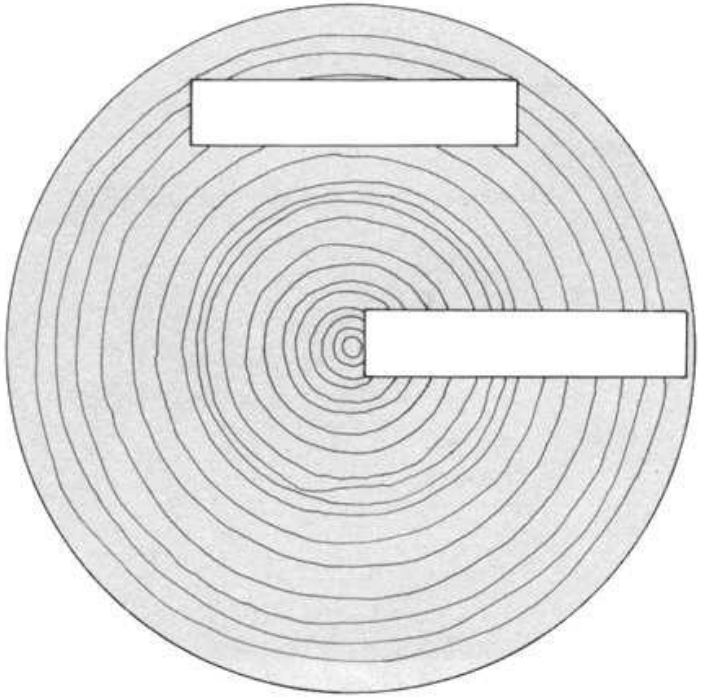



The Plain Sawn Plank
It will tend to move most across its width and roughly half as much through its thickness.



The Quarter Sawn Plank
Here the greatest movement will be in its thickness (and is relatively unimportant); it moves about half as much across its width.

Annual rings tend to become less curved when drying. There is a greater tendency towards distortion in a plain sawn plank than in a quarter sawn.

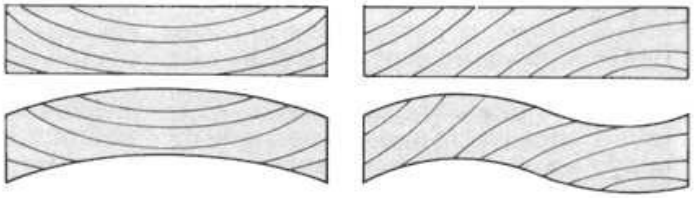

Figure 78 Movement in Wood Once Dried

FOR TRAINING PURPOSES ONLY!

© Lufthansa Technical Training

Conversion

After the bulk timber has been tested and graded, it may be converted into structural members for use on aircraft. This conversion should be done with every possible care, for much depends on the way in which timber is sawn.

- **Rift−Sawing**.
  - The process of cutting timber along the radius of the annular rings is known as rift−sawing. Rift−sawing and near−quarter−sawing are very much the same.
- **Tangential sawing**.
  - The process of cutting at a tangent to the annular rings is known as tangential−sawing. Tangential−sawing (slashing) produces visible grains.

The actual method of converting timber is best described by the use of an example as follows.

- Assuming that spar members of a rough finished size of 102 mm (4 inches) by 51 mm (2 inches) are required and a 102 mm (4 inch) rift−sawn plank of timber is available, it should be cut tangentially to give a size of 102 mm (4 inches) by 102 mm (4 inches).
- After that a radial cut will give rift−sawn pieces 102 mm (4 inches) by 51 mm (2 inches) (allowance should, of course, be made for the saw−cut).

The main advantage of rift−sawn timber is that it shrinks chiefly in one direction only, and does not warp very much.

FOR TRAINING PURPOSES ONLY!

© Lufthansa Technical Training

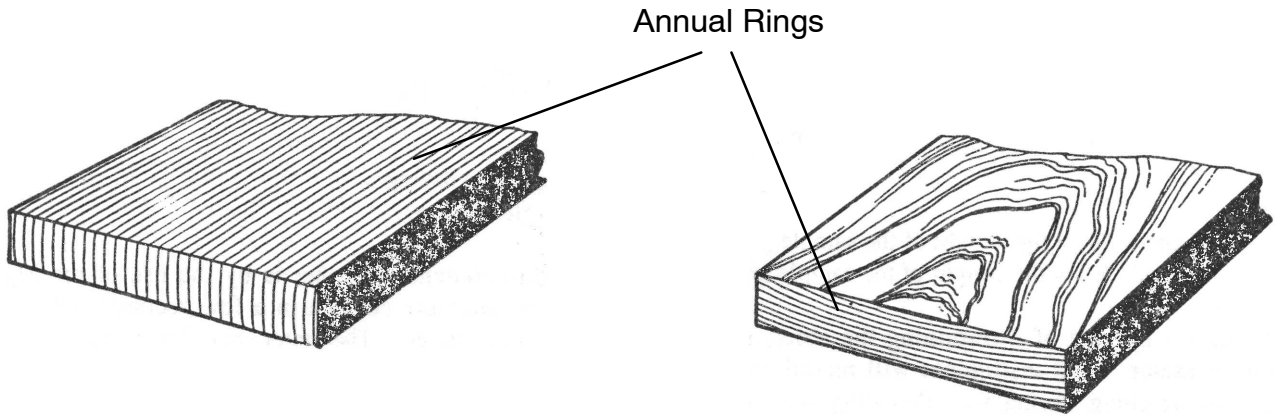

Figure 79 Cutting Timber

FOR TRAINING PURPOSES ONLY!

© Lufthansa Technical Training

Selection Criteria for Conversion

Defects

After timber has been converted it should be examined for defects. Some of the more common defects are outlined in the following paragraphs.

- **Dote–Disease**
  - This is the worst of all defects and does much damage to the wood. It is an inherent disease which only occurs at the base of the living tree. When the tree is felled it is cut at a point ten feet or more above the ground as a precaution against the possibility of dote. Converted pieces of timber should be examined not only on the sides but also on the ends; dote will be recognised by the presence of brownish yellow patches, somewhat similar to thin mineral oil spots. Dote is contagious and any infected wood should be burnt.
- **Decay or Rot**
  - A defect similar to dote disease can develop after a tree has been felled if the timber is exposed to excessive soaking and partial drying. Dry–rot fungus requires a certain amount of moisture to thrive on but once the disease is established it thrives on the moisture already in the wood. The decayed wood is brown in colour and appears as though it had been charred; the timber is rendered soft and dry, and will flake off easily.
- **Incorrect Grain Inclination**
  - The limit of grain inclination for spruce is 1 in 15 for grade A, and 1 in 12 for grade B. The inclination should be checked to ensure that the above limits are not exceeded. The most usual method of determining the inclination of the grain is by examining the flower–face of the timber to find the resin ducts. It will readily be seen whether they are straight or inclined. If the inclination exceeds the limits specified, the timber should be classified in a lower grade.
- **Heart–Shake**
  - This defect usually follows the course of a sap duct longitudinally, and is usually visible on the tangential surface. The use of a small size feeler gauge will assist in finding the depth of the shake. The defect should be cut out of the timber.
- **Ring–Shake**
  - This defect is indicated by a parting of the annular rings. Ring–shakes are usually caused by frost, particularly after a heavy rainfall. The defect should also be cut out of the timber.
- **Compression–Shake**
  - This defect appears on a cross–section and usually takes the form of a thin wavy line. Compression–shakes are most dangerous as they are a partial fracture of the timber and any future loads may cause the fracture to be completed.
- **Knots**
  - There are several kinds of knots which may be encountered when examining converted timber; these are the dead–knot, the bud–knot and the pin–knot. The presence of any of these knots can have a detrimental effect. Generally they should not be more than a quarter of an inch in diameter but no hard and fast rules can be specified; each case must be decided on its merits. Timber with ”clusters” of pin–knots in it should be rejected.
- **Pitch Holes**
  - There are two kinds of pitch holes, one being the horizontal type which usually appears at the base of a knot, and the other the vertical type which is sometimes referred to as a gum pocket. Gum pockets may either be ”alive” (the gum–seam has not dried out) or ”dead”, and in the case of the latter, the timber should be rejected. Tests on ”live” gum pockets have shown that the timber in the region of the gum pocket usually gives a better result than the remainder of the timber.
- **Blue Stain**
  - This defect only occurs in sapwood which should not be used in aircraft parts.

FOR TRAINING PURPOSES ONLY!

© Lufthansa Technical Training

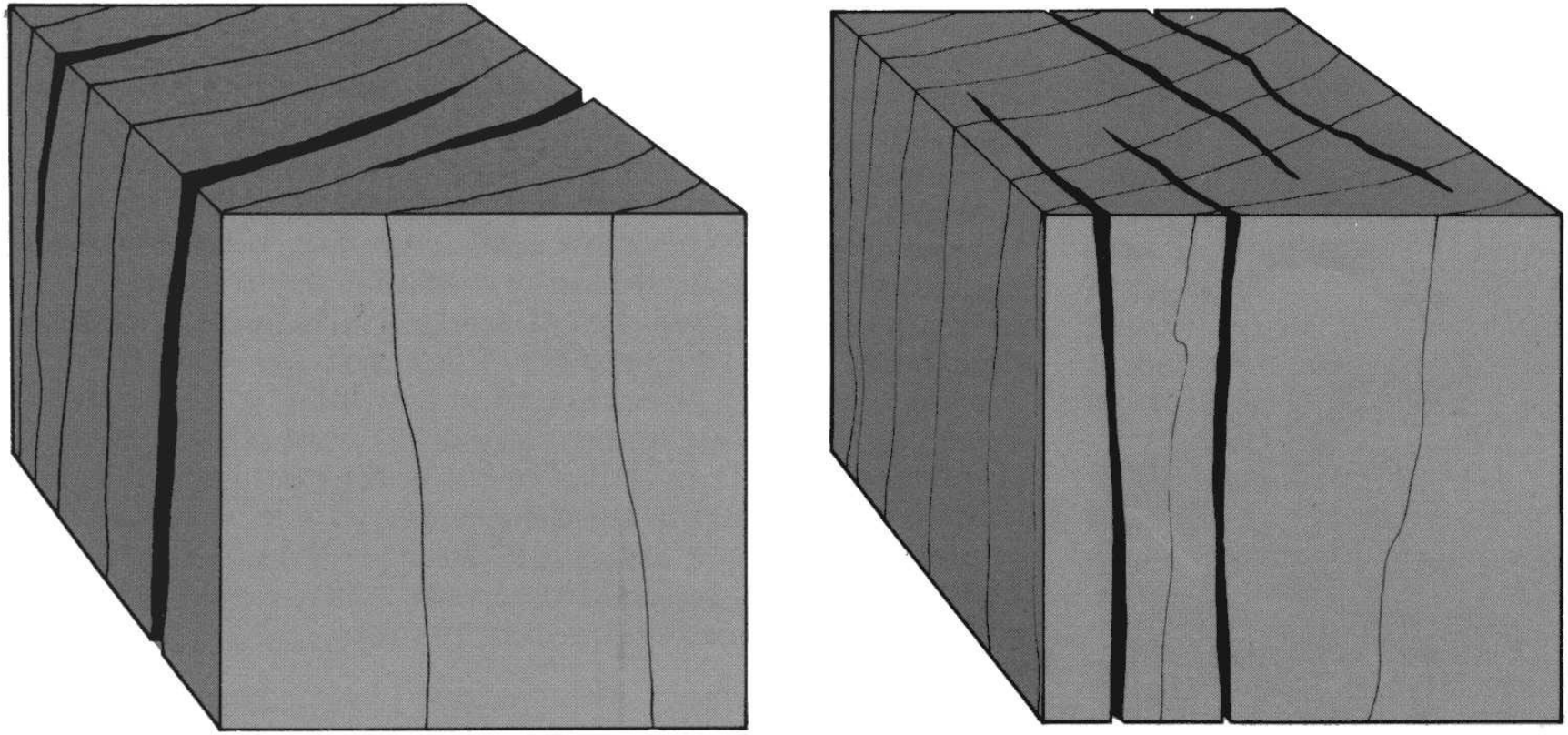

Pitch Pockets

Shakes

Figure 80 Wood Defects

FOR TRAINING PURPOSES ONLY!

© Lufthansa Technical Training

Repair Materials

Species of Wood	Strength Properties Compared to Spruce	Max Permissable Grain Deviation (Slope of Grain)	Remarks
Spruce	100%	1:15	Excellent for all uses. Considered as standard for this table.
Douglas Fir	Exceeds spruce	1:15	May be used as substitute for spruce in same or slightly reduced sizes providing reductions are substantiated. Difficult to work with hand tools. Some tendency to split and splinter during fabrication. Large solid pieces should be avoided due to inspection difficulties. Gluing satisfactory.
Noble Fir	Slightly exceeds spruce except 8% deficient in shear	1:15	Satisfactory characteristics with respect to workability, warping and splitting. May be used as direct substitute for spruce in same sizes providing shear does not become critical. Hardness somewhat less than spruce. Gluing satisfactory.
Western Hemlock	Slightly exceeds spruce	1:15	Less uniform in texture than spruce. May be used as direct substitute for spruce. Gluing satisfactory.
Pine, Northern White	85 - 96% those of spruce	1:15	Excellent working qualities and uniform in properties but somewhat low in hardness and shock-resisting capacity. Cannot be used as substitute for spruce without increase in sizes to compensate for lesser strength. Gluing satisfactory.
White Cedar, Port Orford	Exceeds spruce	1:15	May be used as substitute for spruce in same or in slightly reduced sizes providing reductions are substantiated. Easy to work with hand tools. Gluing difficult but satisfactory joints can be obtained if suitable precautions are taken.
Poplar, Yellow	Slightly less than spruce except in compression (crushing) and shear	1:15	Excellent working qualities. Should not be used as a direct substitute for spruce without carefully accounting for slightly reduced strength properties. Somewhat low in shock-resisting capacity. Gluing satisfactory.

FOR TRAINING PURPOSES ONLY!

© Lufthansa Technical Training

THIS PAGE INTENTIONALLY LEFT BLANK

FOR TRAINING PURPOSES ONLY!

© Lufthansa Technical Training

Synthetic Resin Adhesives

General

Synthetic resin adhesives are used extensively for joints in wooden structures to avoid the localised stresses and strains which may be set up by the use of mechanical methods of attachment (e.g. bolts, screws);

The strength of such structures depends largely on the effectiveness of the glued joints and cannot be verified by means other than the destruction of the joints. Acceptance has therefore, to be governed by adequate inspection at various stages throughout the gluing process and by assessment of the results obtained from representative test pieces.

Synthetic resin adhesive

Synthetic resin adhesives usually consist of two separate parts, the resin and the hardener.

The resin develops its adhesive properties only as a result of a chemical reaction between it and the hardener, and will not harden without it. With some adhesives, an inert filler may be added to increase viscosity and to improve gap–filling properties.

Preparation of Adhesives

Synthetic resins can be obtained in either liquid or powder form. In general, powder resins have the longer storage life, since they are less susceptible to deterioration which can result from high ambient temperatures.

- **Powder Resins**
  - Powder resins should be mixed with water in accordance with the manufacturer's instructions before they can be used in conjunction with a hardener and to obtain satisfactory results it is essential that they should be properly mixed. Once mixed, the resin should not be diluted unless this is specifically permitted by the manufacturer.
- **Liquid Resins**
  - Besides powder resins liquid resins are also available. The liquid resin is mixed with the hardener. Hardeners should not be permitted to come into contact with the resin except when the adhesive is mixed just prior to use, or, as is necessary with some adhesives, when the joint is assembled by coating one face with resin and the other with hardener

Condition	Temperature		
	70°F (21°C)	80°F (27°C)	90°F (32°C)
Mixture Pot Life (hours)	4–5	2.5–3.5	1–2
Maximum Assembly Time			
Open (minutes)	15	10	5
Closed (minutes)	25	15	8
Pressure Period (hours)	14	8	5
Assembly must be maintained at a temperature of 70°F or above to assure a satisfactory cure of the glue line.			

Powder Resin Glue Working Timetable

- **Maturation time**
  - In many instances, manufacturers specify a definite period of time which must elapse between the mixing and the application of the adhesive This time period is known as maturation time.
- **Storage**
  - Aside the limited pot life of the mixed adhesive the resin itself is also limited in time in its application, even when it is ideally stored. An adhesive should in no case be used when the shelf-life given by the manufacturer is expired. Powder resins which show some kind of sticking or corrosion of the box and liquid resins which look like gel or are very high viscose should be disposed, even if the expiring date has not been passed. The storage temperature should not be over 21°C.

FOR TRAINING PURPOSES ONLY!

© Lufthansa Technical Training

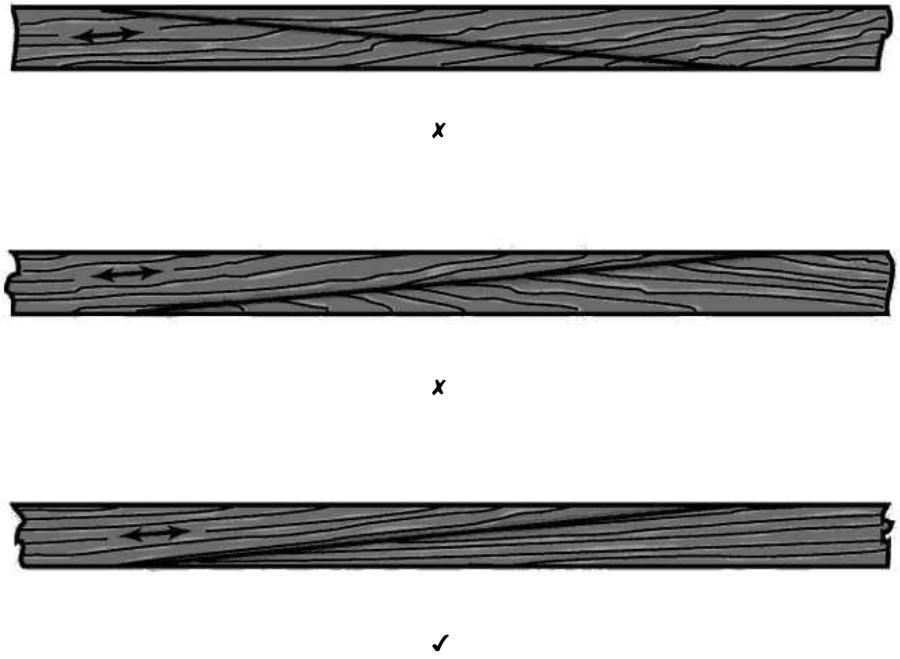

✗

✗

✓

Avoid end-grain joints when gluing wood.

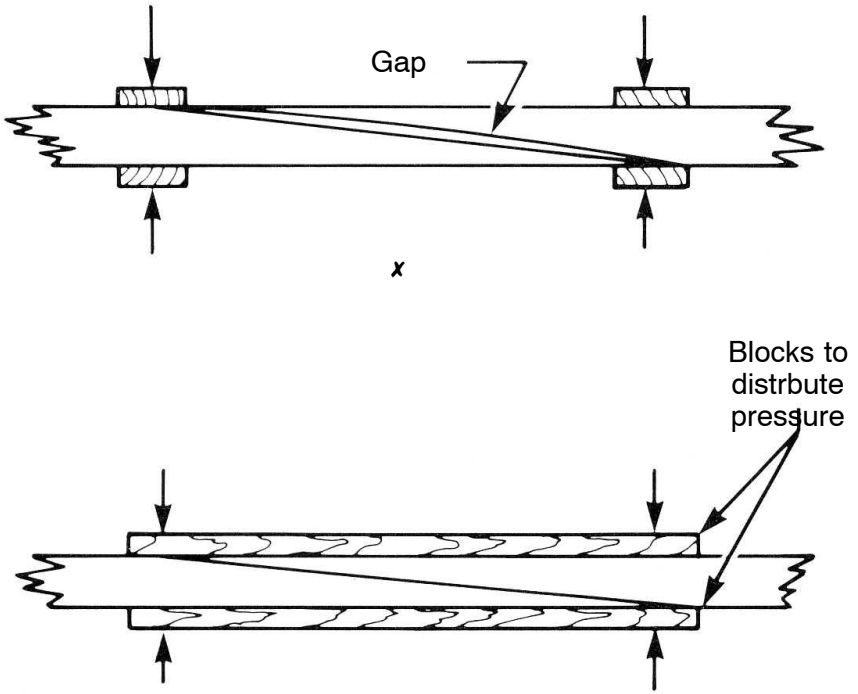

✗

✓

Pressure must be applied evenly over all of the surface of the glue joint.

Figure 81 Considerations when Gluing Wood

FOR TRAINING PURPOSES ONLY!

© Lufthansa Technical Training

Preparations of Surfaces

- **General**
  - The surfaces to be joined should be clean and free from grease, oil, wax, crayon, paint and varnish; it is advisable not to handle the joint faces once they have been prepared. Where old timber is to be re–used, all traces of the previous adhesive should be removed and the timber beneath cleaned; local staining of the wood by previous hardener or casein cement may be disregarded. Where any painting operations are to be carried out, all surfaces which are to be glued should be adequately masked.
- **Plywood Surfaces**
  - All areas of plywood surfaces to be glued should first be 'sanded' in order to remove surface glazing and loose fibres. Sanding should be done lightly and uniformly either in the direction of the grain or diagonally across it, using a medium grade of glasspaper; local scratching or roughening, use of too coarse a paper and undue pressure, should be avoided. The sanding should not be excessive otherwise the fit of the joint may be affected.
- **Timber Surfaces**
  - Timber surfaces should be suitably roughened so as to form a firm key for the adhesive and a medium grade of glasspaper or a wood scraper is suitable for this purpose. To form a strong efficient joint, it is essential that the mating surfaces should be a good fit. This is particularly important in the case of blind joints, the members of which may be chalked on their gluing surfaces before being assembled dry as a check on the fit; the chalk should be completely removed before application of the adhesive.

Conditions for Gluing

Synthetic resin adhesives are very sensitive to variations in temperature and the usable (pot) life of the adhesive, choice and proportion of hardener and clamping times, all depend largely on the ambient temperature at the time of gluing; it is, therefore, important to ensure that the manufacturer's instructions regarding these factors are followed.

- The timber to be glued should be allowed sufficient time to attain the temperature of the room in which the gluing is to take place; it should not be overheated or raised too quickly from a low temperature, since this affects the surfaces of the timber and reduces the efficiency of most synthetic resin adhesives. It is important, therefore, that timber should be kept clear of radiators and other sources of heat prior to gluing.

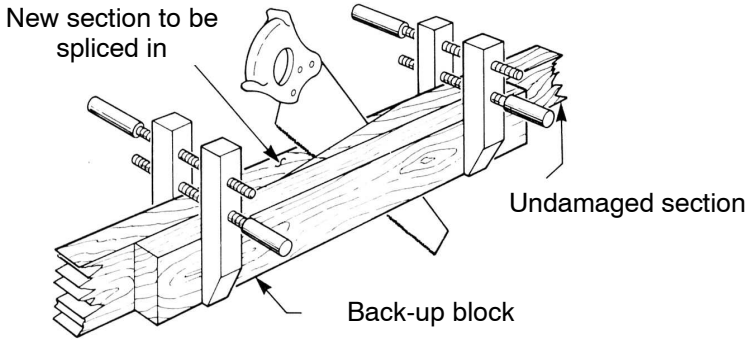

Correct method of cutting a wooden wingspar

FOR TRAINING PURPOSES ONLY!

© Lufthansa Technical Training

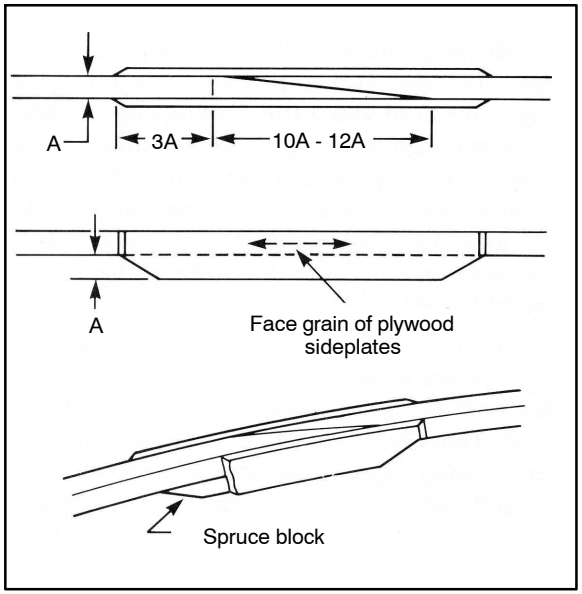

Rib cap strip splice

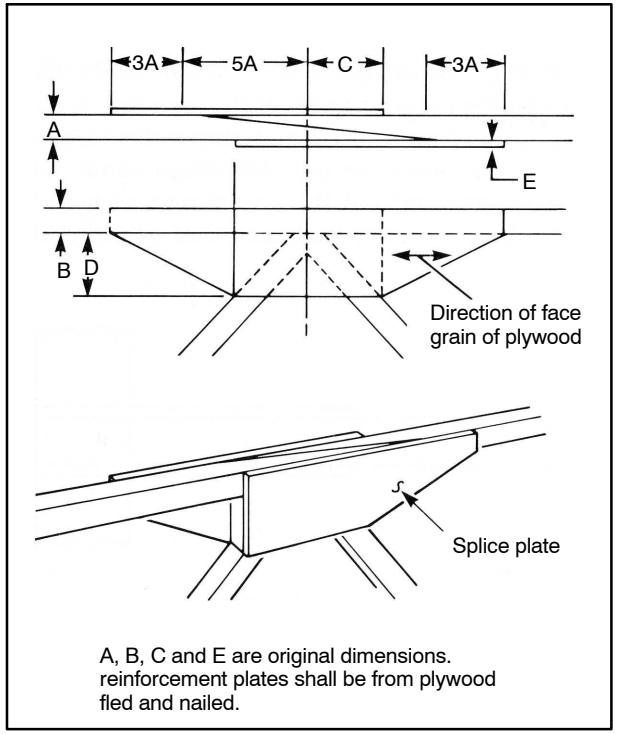

Rib splice spar over an upright member

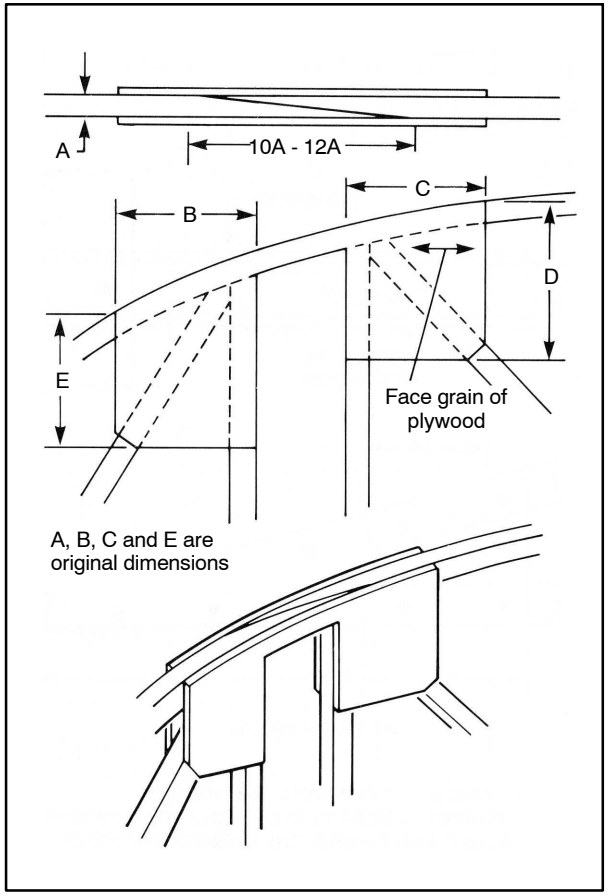

Rib cap strip splice over a spar.

Figure 82 Wing Rib Repairs

FOR TRAINING PURPOSES ONLY!

© Lufthansa Technical Training

Application of Adhesive

General

It is generally desirable to apply adhesive to both surfaces of a joint. This applies particularly where plywood is to be glued to a fairly robust member, where the glue line is likely to be variable or when it is not possible to apply uniform pressure to the joint after gluing.

Tools to apply adhesive

Ordinary glue spreaders are satisfactory for the application of synthetic resin adhesives, but those having slightly grooved rubber rollers give the best results. Brushes may also be used provided they are perfectly clean.

Amount of adhesive

The amount of adhesive required depends largely on the type of timber and the accuracy of machining; dense timbers require less adhesive than soft or porous types.

Side−grained surfaces may be satisfactorily glued with thin spreads, and while end−grain joints have virtually no structural value, generous spreads may be applied for gap filling and sealing purposes.

Difficult gluing conditions may sometimes occur when a soft timber is to be glued to one which is much denser, because the adhesive tends to flow into the more porous timber. In such instances, unless otherwise specified by the manufacturer of the adhesive, pre−coating and partial drying of the softer surface, prior to normal spreading, is recommended.

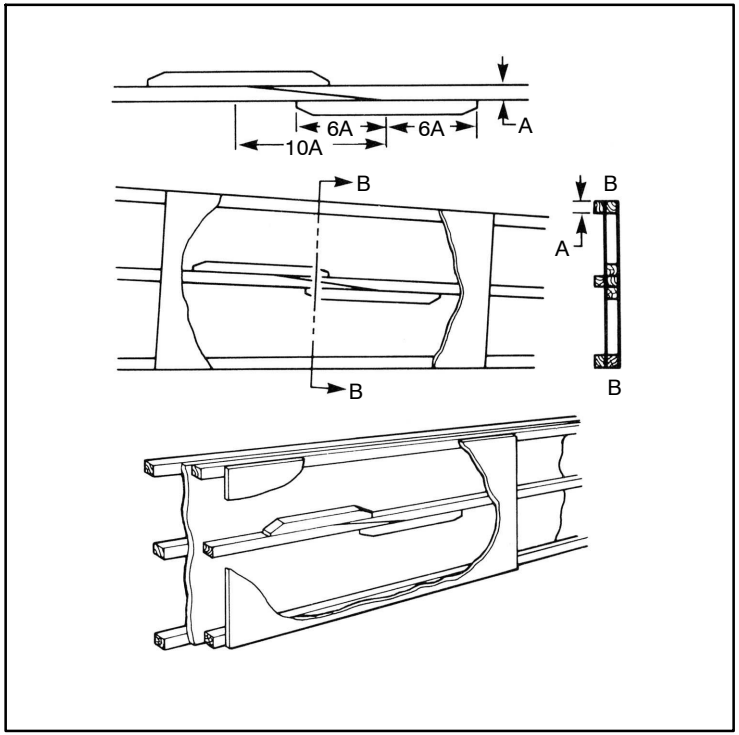

Repair of a built-up compression rib

FOR TRAINING PURPOSES ONLY!

© Lufthansa Technical Training

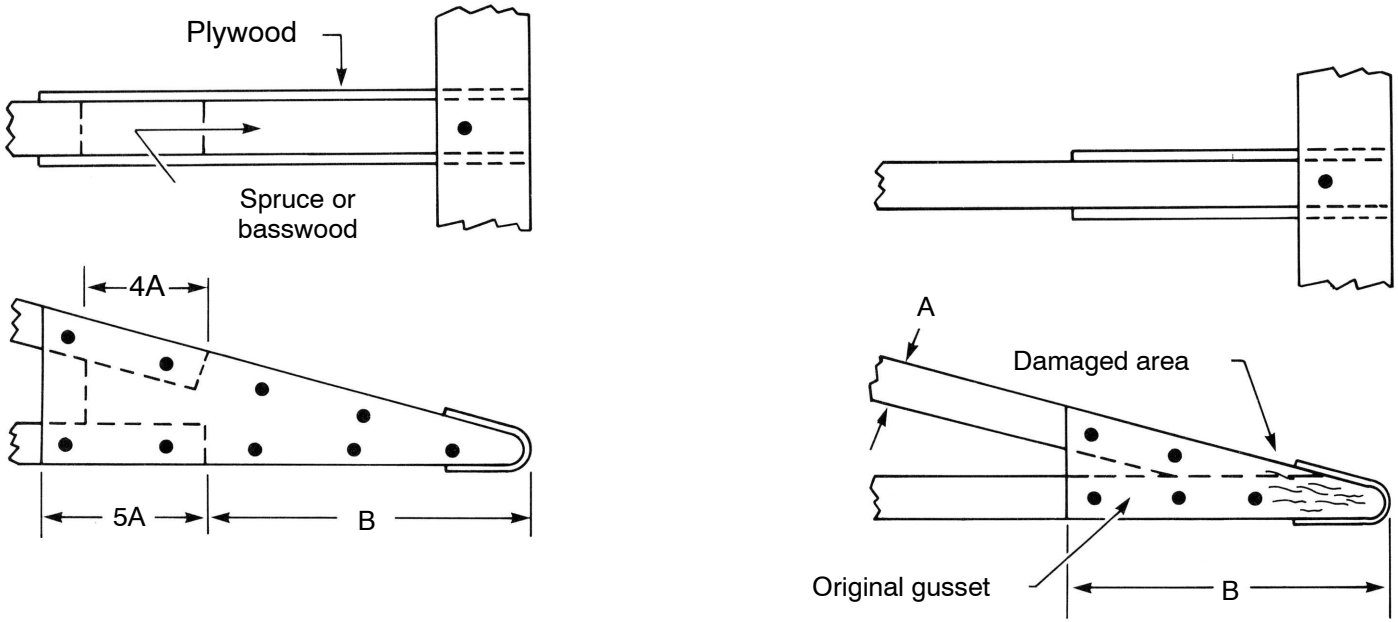

A and B are original dimensions.

Reinforcement plates shall be plywood glued and nailed.

The direction of the face grain must be the same as the original gusset.

Figure 83 Repair of a Trailing Edge

FOR TRAINING PURPOSES ONLY!

© Lufthansa Technical Training

Testing of Adhesive Bondings

General

Frequent tests should be made to ensure that joining techniques are satisfactory.

Wherever possible, tests should be carried out on off–cuts of actual components from each batch. Where off–cuts are not available tests should be carried out on representative test pieces glued up with each batch of mixed adhesive. In addition, the glue strength of component rejected for faults other than gluing should be checked periodically.

- **Test Samples**
  - The test samples should be cut from the timber used for the component and should not be less than 50 mm (2 in) long and 25 mm (1 in) wide with one member over–hanging the other by 12 to 18 mm 1/2 to 3/4 in). The glued test sample should, when conditioned, be put in a vice and the joint should be broken by leverage exerted on the overhanging member. The fractured glue faces should show at least 75 of wood fibres, evenly distributed over the fractured glue surfaces.
- **Wet Tests**
  - When specified, wet tests should be made for the purpose of testing the efficiency of the adhesive after immersing the test samples in water at different temperatures and for different times. Such tests are prescribed in British Standard 1204, but the results are only valid if BS 1204 test pieces are used. However, testing joints after immersion in cold water (15° -25° C (60° -77° F)) for 24 hours, will give a good indication of whether they are cured. Such tests should only be carried out on joints which have been conditioned for 2 to 3 weeks.

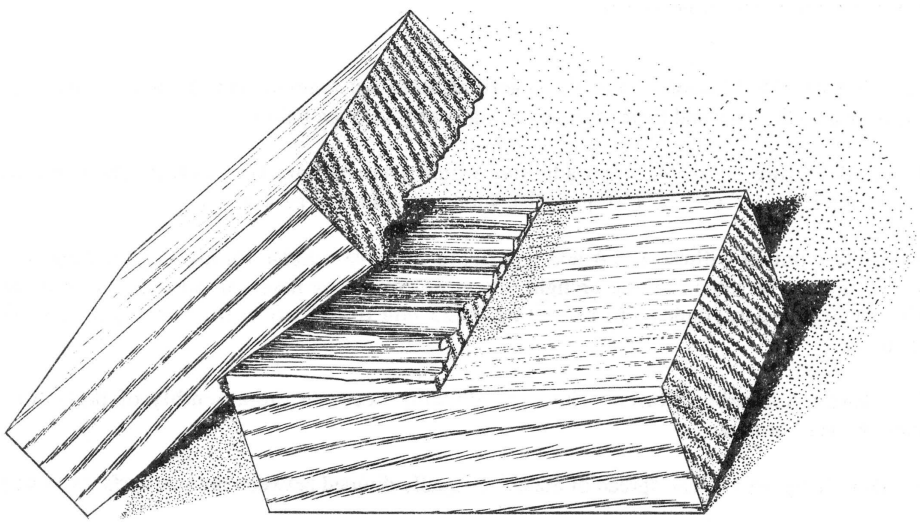

Broken test piece (>75% wood fibres)

FOR TRAINING PURPOSES ONLY!

© Lufthansa Technical Training

THIS PAGE INTENTIONALLY LEFT BLANK

FOR TRAINING PURPOSES ONLY!

© Lufthansa Technical Training

M6.3.3 FABRIC COVERING

CHARACTERISTICS, PROPERTIES AND TYPES OF FABRICS

Materials

General

Before the covering of any component is commenced, the structure must be inspected, all foreign matter removed and protective treatments (as prescribed in the relevant drawings) must be applied. Often it is necessary to install flying control cables, electric cables, fuel tanks and other systems before covering large components and these should be inspected as necessary and checked for security.

The most suitable conditions for the application of fabric are a room temperature of 16° C - 21° C (61° F - 70° F) and a relative humidity of not more than 70.

Fabrics

Aircraft fabrics are woven from spun threads or 'yarns'; those running lengthwise are termed the 'warp'; and those running crosswise are termed the 'weft'. The number of yarns per centimetre (inch) varies with different weights of fabric and is not necessarily the same in both warp and weft. The non−fraying edge of the fabric is termed the 'selvedge'.

Usage of different materials

- When an unsupported fabric cover is required, unbleached linen is normally used
- A light cotton fabric is generally used for covering wooden surfaces. This acts as a key to the doping scheme, giving added strength and improving surface finish.
- Natural fabrics like cotton or linen degrade during operation because of solar radiation, mold or air pollution and have to be replaced several time during an aircraft life, if needed. To increase the time periods between replacements of the fabric, artificial fabrics have been developed which are approved for special aircrafts in some countries. The most common artificial fabrics are polyester and glassfibre, which are sold under different business names.

FOR TRAINING PURPOSES ONLY!

© Lufthansa Technical Training

THIS PAGE INTENTIONALLY LEFT BLANK

FOR TRAINING PURPOSES ONLY!

© Lufthansa Technical Training

Fabric Tapes

Linen tapes and cotton tapes are available in various widths for covering leading edges, trailing edges and ribs, and for repair work. The materials are supplied with serrated edges, as illustrated in the figure opposite. Cotton tape is generally used on those members where chafing may occur between the structure and the fabric and is also used externally to protect the fabric against damage by the stringing cord.

Thread

Linen thread is normally used. For hand sewing threads with a minimum breaking strength of 3 kg (7 lb) used double, or threads with a minimum breaking strength of 7.25 kg (16 lb) used single, are suitable. For machine sewing threads with a minimum breaking strength of 4.5 kg (10 lb) is used.

Stringing

Flax cordage or braided nylon cord (coreless) is normally used for stringing.

Eyeleted Fuselage Webbing

On a number of older types of aircraft, cotton webbing braid with hooks, or lacing eyelets and kite cord, are used for securing the fuselage fabric.

Storage

All materials used for fabric covering should be stored at a temperature of about 20° C (68° F) in dry, clean conditions and away from direct sunlight.

CAUTION: IT IS VERY IMPORTANT THAT THE MANUALS OF THE AIRCRAFT MANUFACTURER OR THE FABRIC MANUFACTURER ARE FOLLOWED PRECISELY AND THAT ONLY THE SPECIFIED MATERIALS ARE USED.

FOR TRAINING PURPOSES ONLY!

© Lufthansa Technical Training

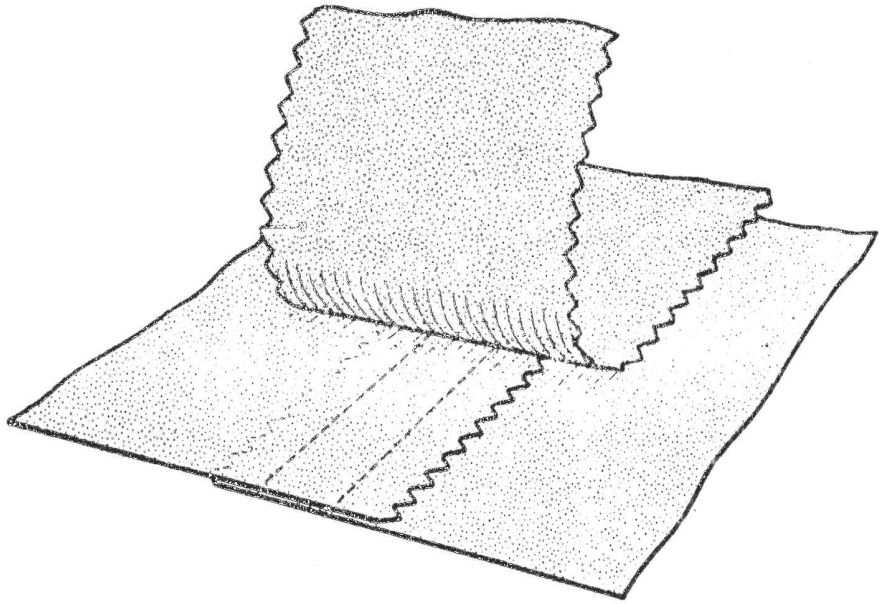

Figure 84 Lap Seam

FOR TRAINING PURPOSES ONLY!

© Lufthansa Technical Training

Preparation of Structure

General

The structure to be covered should be inspected. All comers or edges and any projections such as bolts or screw heads likely to chafe the fabric must be covered with tape. Where serious chafing may occur and a strong reinforcement is required, a canvas or leather patch may be sewn to a fabric patch, then doped into position.

In order to prevent dope from reacting with any protective treatment and to prevent fabric from adhering to wooden structure, all aerofoil members which will be in contact with the fabric are normally covered with adhesive cellulose or aluminium tape, or painted with dope−resistant white paint.

On some aircraft, which have a tubular metal fuselage frame, the fuselage shape is made up with wooden formers attached directly to the main framework and to these wooden formers are secured light longitudinal members onto which the fabric covering is doped. This secondary structure must be inspected for security and any sharp edges removed with fine glass paper.

Where stringing is likely to be chafed by parts of the structure, protection should be provided by wrapping such parts with cotton tape. Before the tape is applied the structure should be treated with varnish to protect it from corrosion should the tape become wet.

Internal controls and cables should be tightened to assume their normal positions and secured at the root rib to avoid chafing.

Covering Methods

General

An aircraft fabric may be fitted with the warp or weft running at 45° to the slip−stream, or in line with the slip−stream. The former (bias) method is generally considered to be stronger and more resistant to tearing, but the latter method is used on most light aircraft. The method used in a particular instance should follow that of the original manufacture unless otherwise approved.

Prefabricated Envelopes

A number of manufacturers produce fabric envelopes for re−covering various models of aircraft. Separate envelopes are made up for many parts and greatly simplify the task of re−covering. The envelopes are made loose enough to facilitate slipping them over the structure and to achieve the proper tautness after doping.

”Blanket” Method of Covering

With this method a bolt of fabric is used and covers are made−up on the site. Lengths of fabric, or a number of lengths joined side−by−side, being used to cover the aircraft structure.

FOR TRAINING PURPOSES ONLY!

© Lufthansa Technical Training

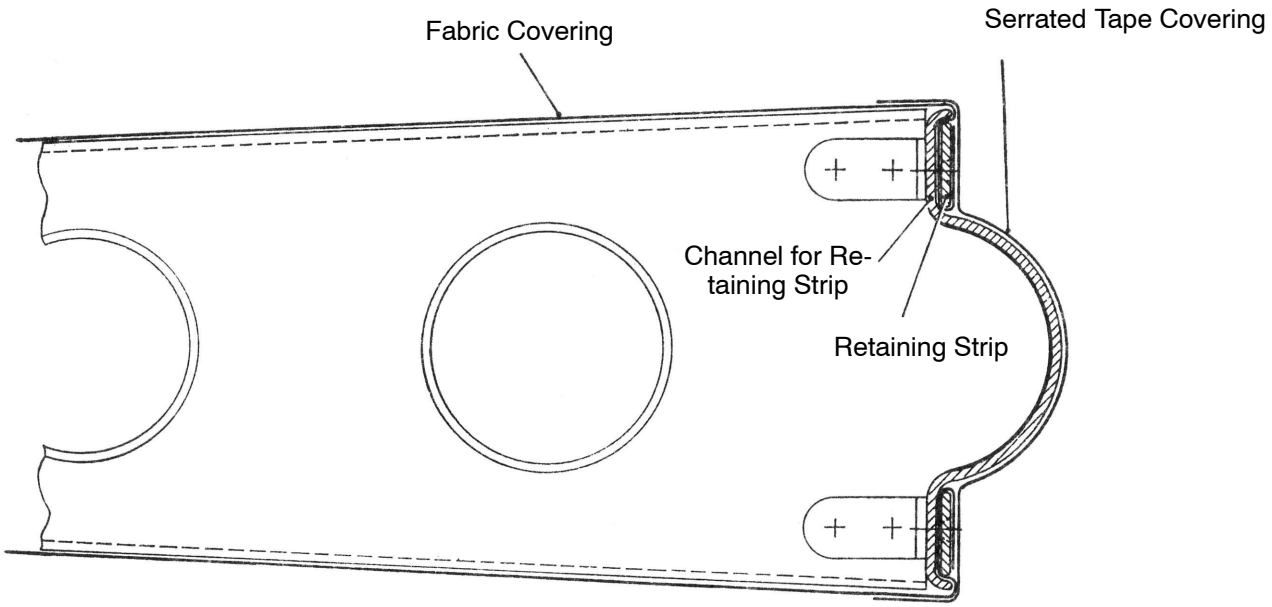

Figure 85 Attachment of Fabric by Strip

FOR TRAINING PURPOSES ONLY!

© Lufthansa Technical Training

Seams, Stitches and Stringing

Seams General

The seams should be parallel to the fore- and aft line of the aircraft. Seams which are laying on a bias are also acceptable.

The Balloon Seam

The balloon seam, sometimes referred to as the 'French Fell', is normally specified for all fabric joints. To make the seam, the edges of the fabric are folded back and are then fitted into each other, tacked together and then machine sewn with four stitches per centimetre (nine stitches per inch) in two parallel lines. After completion, the seam should be examined over a strong electric light to ensure that the inside edges of the fabric have not been missed during sewing.

The Lap Seam

The lap seam should only be used when specified by the manufacturer. Unless the selvedges are present, the edges of the fabric should be serrated with 'pinking' shears.

Hand Sewing

For repair work the herring–bone (or 'baseball') stitch and the boot stitch is used.

Overhand Stitch

The overhand stitch is used for trailing edges, wing tips, wing root ends and wherever a sudden change of section occurs. Sufficient excess fabric should be allowed for turning under before sewing is commenced; a 12 mm (0.5 in) turn–under is usually sufficient. An even gap of about 6 mm (0.25 in) (usually) should be allowed for pulling up the two edges to obtain the correct fabric tension, but this figure can only be determined finally by experience of the work in hand. The sewing should follow the contour of the component evenly to ensure a good finish after doping. The number of stitches should be three per centimetre (eight per inch), a lock stitch being included approximately every 50 mm (2 in).

FOR TRAINING PURPOSES ONLY!

© Lufthansa Technical Training

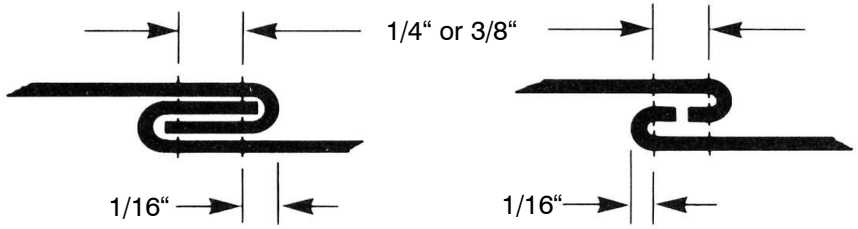

Folded Fell Seam **French Fell Seam**

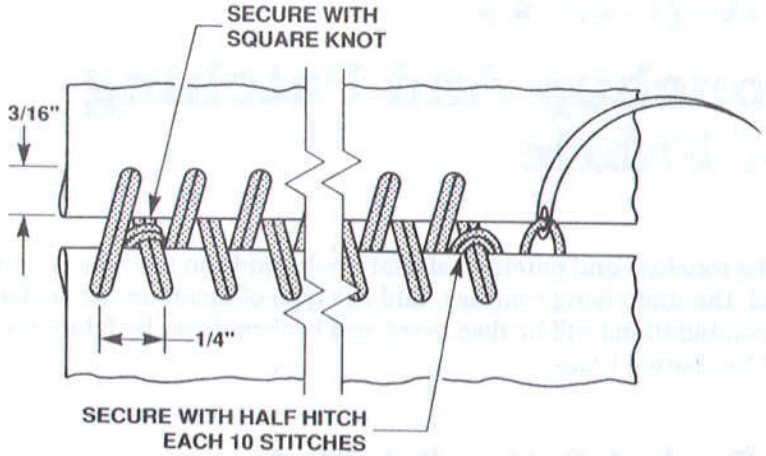

Herring-Bone- / Baseball Stich

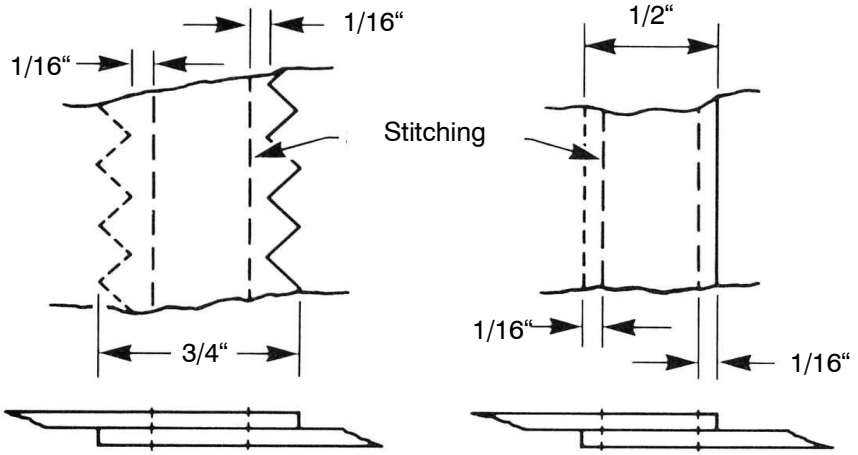

Plain Overlap Seam

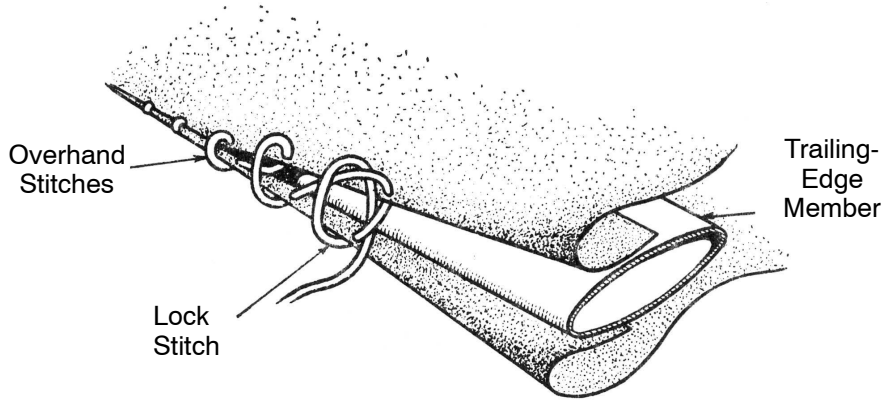

Overhand Stich

Figure 86 Seams

FOR TRAINING PURPOSES ONLY!

© Lufthansa Technical Training

Use of Beeswax

All threads used for hand sewing and all cord used for stringing (when not pre−waxed), should be given a liberal coating of beeswax. This protects the thread, facilitates sewing and reduces the likelihood of damaging the fabric or enlarging the stitch holes.

Stringing

Linen cord is normally used for stringing purposes and is generally applied in single strands as shown opposite. As an alternative, but only when approved by the manufacturer, doubled thread may be used during repair work.

When the fabric covering of the component has been completed, the stringing is capped with cotton tape over each rib, this works as a reinforcement for the stringing.

Using a stringing needle and commencing at the top surface, the stringing cord should be passed through the tape and fabric as close to the rib as possible, out through the bottom fabric and tape, round the lower rib boom and back up through both surfaces again. A double knot should be used to secure the first and last stringing loops and after each 450 mm (18 in). In between, single knots may be used.

The stringing pitch is normally 75 mm (3 in) but in the slip−stream area, or on aircraft of more than 910 kg (2000 lb) weight, the pitch is often reduced to 37 mm (1.5 in). Variations from these pitches will be stipulated in the relevant aircraft manuals.

When the stringing has been completed a strip of serrated tape, 37 mm (1.5 in) wide, should be doped over the stringing line on both surfaces, care being taken to ensure that no air is trapped under the tape and that the tape is securely attached to the main cover.

NOTE: The knots depicted in the figure opposite are typical but a different type of knot may be specified by the manufacturer.

Boom Stringing

This type of stringing is used on deep aerofoil sections. The procedure is similar to that described above, except that the cord is passed round the rib boom instead of round the entire rib. Top and bottom surfaces are therefore attached separately and the inside of each boom must be taped to prevent chafing of the stringing cord. Alternate rib and boom stringing is sometimes used on aerofoils of medium depth, ie 150 - 300 mm (6 -12 in).

Stringing Tension

Care must be taken to ensure that all stringing is maintained at a satisfactory tension and that it is not so tight as to cause distortion of the ribs.

Propeller area

For stringing purposes, the propeller area is considered to be the diameter of the propeller plus one rib on either side. In the case of multi−engined aircraft, the entire gap between the propeller, regardless of its width, is also considered to be propeller area.

FOR TRAINING PURPOSES ONLY!

© Lufthansa Technical Training

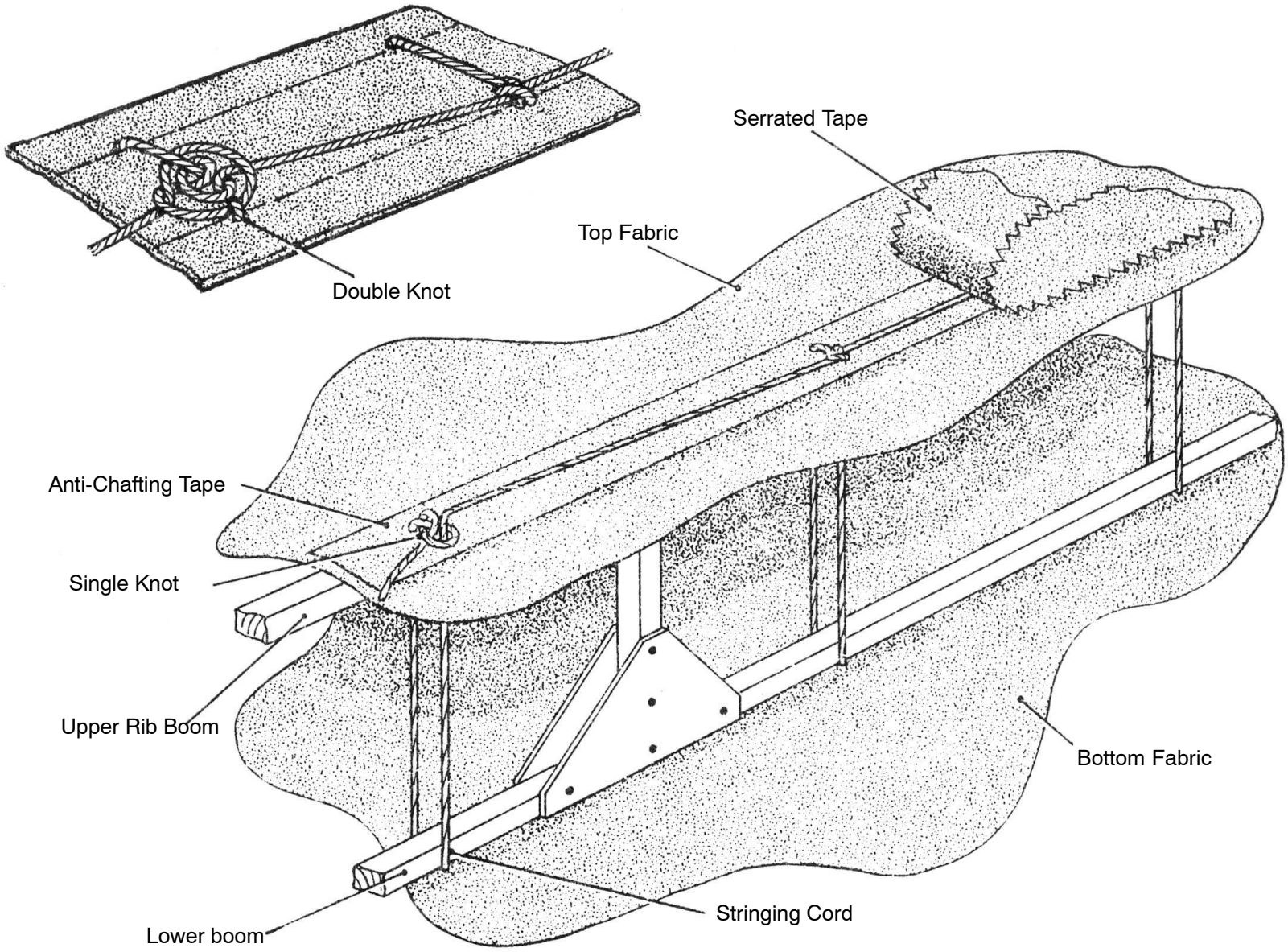

Figure 87 Typical Stringing

FOR TRAINING PURPOSES ONLY!

© Lufthansa Technical Training

Miscellaneous Methods of Fabric Attachment

General

In addition to the standard methods of fabric attachment previously described, other methods are sometimes employed. The most commonly used are outlined here.

Attachment by Strip

Attachment of the fabric by wrapping it around a light alloy strip or rod which is then secured in a channel or groove is sometimes used with metal structures.

Special Stringing

A variation of the method described in the previous paragraph, used for attaching fabric to metal ribs and known as 'special stringing', is shown on the next side.

Adhesives

On some small aircraft, where air loads are light, stringing is dispensed with on the wing and tail surfaces and the fabric is attached to the structure by means of a proprietary adhesive. This method produces a much smoother surface on the components and saves time during construction and repair.

Attachment of Fabric to Plywood

Dope is generally used for the attachment of fabric to plywood, but before the fabric is applied, the wood surface should be smoothed with fine glass paper and any cavities, such as those caused by the countersinking for screwheads, filled and allowed to set. The filler area should be reduced to an absolute minimum because of the reduced adhesion of the doped fabric in such areas.

Attachment of Fabric to Metal Surfaces

Where a light alloy is used as part of the structure of a mainplane the fabric is generally doped into position. Alternatively, a thermoplastic adhesive may be used. To ensure satisfactory adhesion of the fabric, the metal surfaces should be thoroughly cleaned and primed with an etch primer.

Attachment with „Martin Clips“ or sheet-metal-screws

If the original attachment is made up from Martin Clips or sheet-metal-screws they have to be used again. The structure has to be in a correct condition. A plastic washer and a fabric tape have to be put under every sheet-metal-screw.

FOR TRAINING PURPOSES ONLY!

© Lufthansa Technical Training

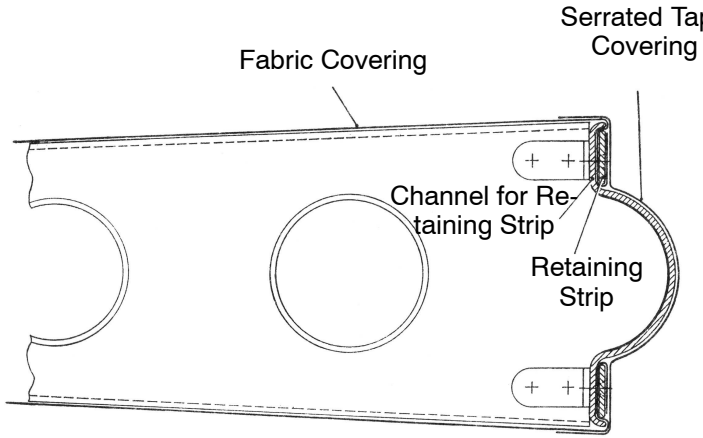

Attachment with stripes

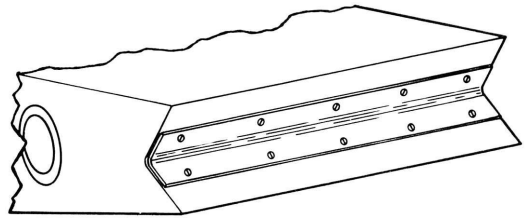

Attachment at the Trailing Edge

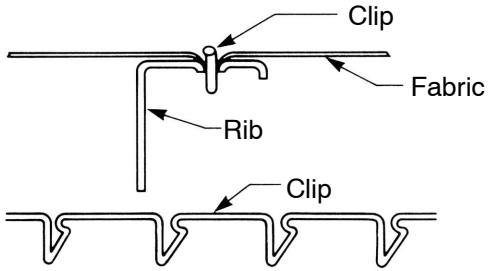

Attachment with Martin Clips

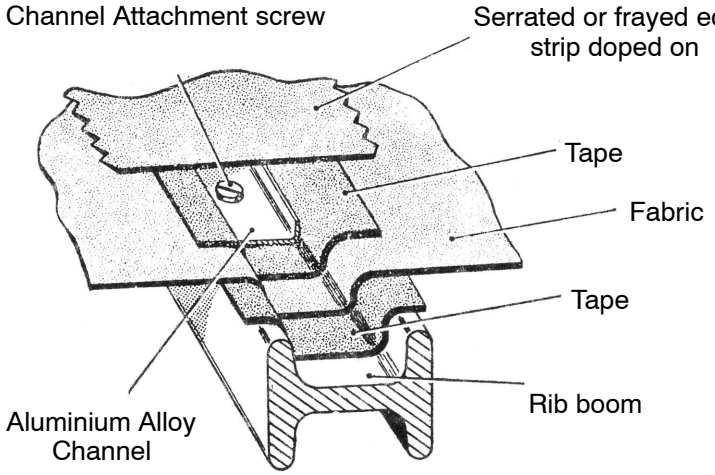

„Special“ Stringing

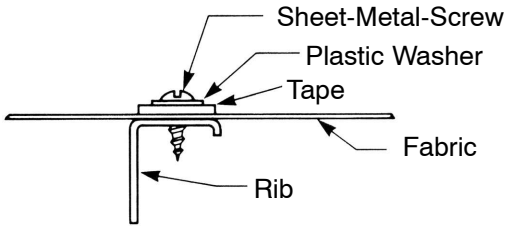

Attachment with Sheet-Metal-Screws

Figure 88 Fabric Attachment

FOR TRAINING PURPOSES ONLY!

© Lufthansa Technical Training

Drainage and Ventilation

General

Drainage and ventilation holes are necessary in fabric–covered components to minimise corrosion of the structure, rotting of the fabric, etc., and, to ensure maximum efficiency, it is important that they should be positioned as prescribed on the relevant drawing.

Drainage holes are usually positioned in the lower surface of components or wherever entrapment of moisture is possible, but when holes are used for ventilating purposes, eg to permit the air pressure inside the component to equalise with the surrounding air at various altitudes, the holes may be located in sheltered positions regardless of drainage qualities.

Drainage Eyelets

Drainage eyelets (grommets) are usually oval or circular in shape and are doped onto the surface of the fabric, but in some cases may be secured by stitching through pre–pierced holes in the eyelets before the finishing scheme is applied.

Shielded Eyelets

Shielded or shrouded eyelets (grommets) are sometimes used in special positions to improve either drainage or ventilation. On marine aircraft they are used to prevent the entry of sea spray. These special eyelets must only be used in specified positions and must not be used as an alternative to standard eyelets. It is also important that the shroud is facing in the correct direction, otherwise it will not be fully effective.

FOR TRAINING PURPOSES ONLY!

© Lufthansa Technical Training

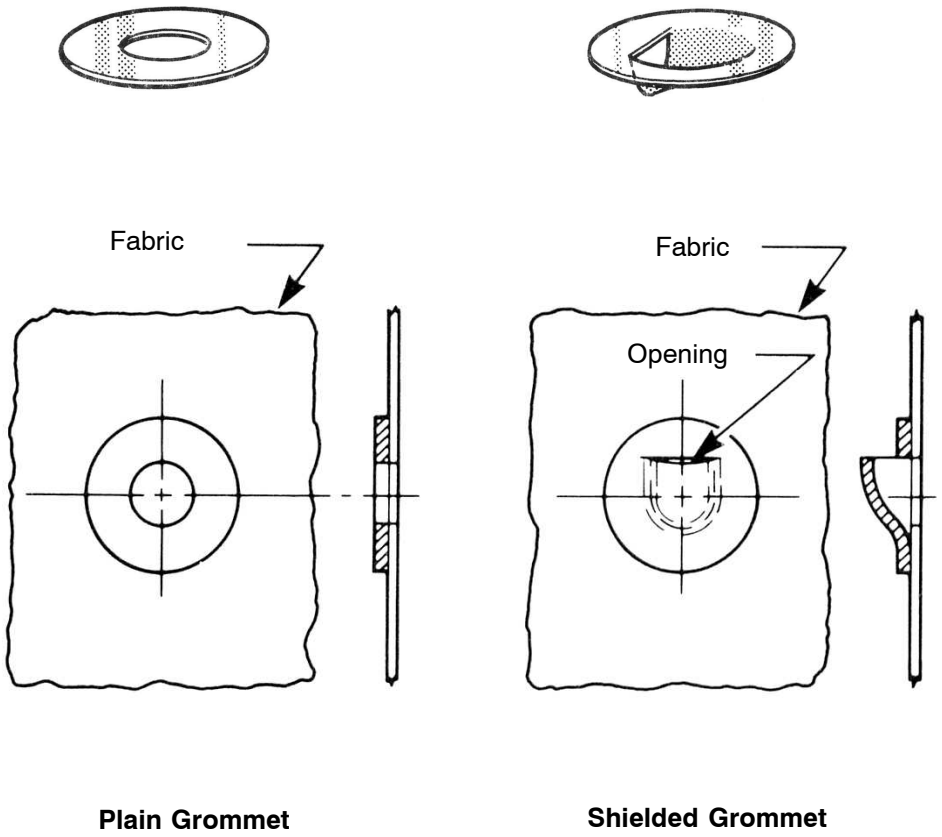

Plain Grommet **Shielded Grommet**

Figure 89 Drainage Eyelets (Grommets)

FOR TRAINING PURPOSES ONLY!

© Lufthansa Technical Training

Inspection Panels

General

For inspection and servicing purposes it is essential that access be provided at specified positions in all fabric coverings.

Wooden Frames.

These are light circular or square frames, made from celluloid sheet, which are doped onto the fabric cover at the required positions. The fabric is then cut away from inside the frames and a serrated edged fabric patch doped over the hole as shown opposite. The disadvantage of this type of panel is that a new patch must be doped on after each inspection and the finishing scheme re–applied.

Zip Panels

These consist of two zip fasteners sewn into the fabric in the form of a vee, the open ends of each fastener being at the apex of the vee. This type of access is suitable for positions where frequent inspection or servicing is necessary. Care should be taken to avoid clogging the zip segments when dope is applied to the fabric.

Spring Panels

A panel particularly suitable for use on light aircraft, is the spring panel which consists of a circular plastic ring and dished light alloy cover. The ring is doped into position in the same way as the Woods Frame and the fabric cut away from the inside. This access hole is closed with a dished cover and a clip.

FOR TRAINING PURPOSES ONLY!

© Lufthansa Technical Training

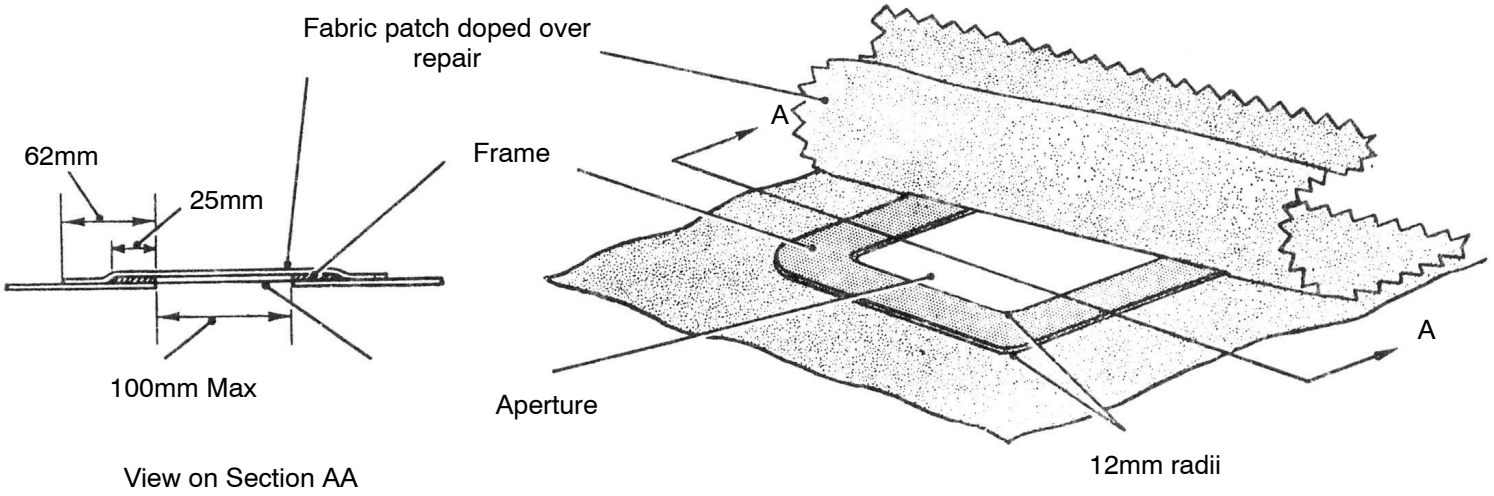

Inspection frame

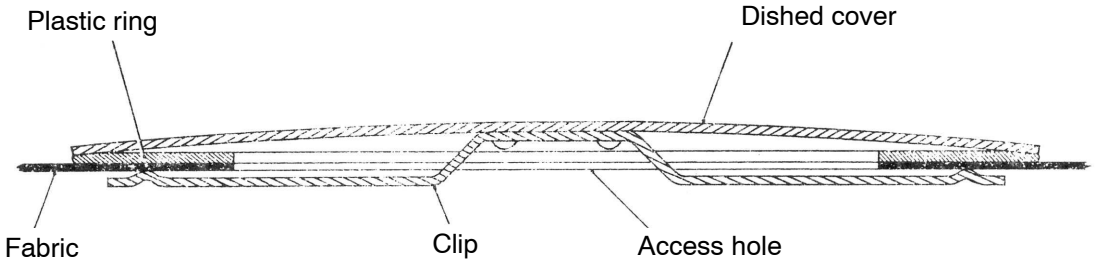

Cross-Section Spring Panel

Figure 90 Inspection Panels

FOR TRAINING PURPOSES ONLY!

© Lufthansa Technical Training

Dopes

Introduction

Fabric has been used from the early days of the aeroplane as a covering for fuselages and aerofoils. It still continues to provide good service for light aircraft but must be protected from deterioration by the application of a dope film. Natural fabrics, such as cotton or linen, deteriorate in use as a result of the effects of sunlight, mildew and atmospheric pollution. Man–made fibres resist some of these agents better than natural fabrics but still require protection. The dope film then achieves the following functions:

- Tautening of natural fabrics
- Waterproofing
- Airproofing
- Lightproofing.

Materials

The basic film consists of dope but other materials are used in its application, as described in the following paragraphs.

Dope-proof paint

Due to the nature of the solvents used in dope, many paints will be attacked and softened by it. Dope–proof paint is therefore used to coat structure which will be in contact with the doped fabric. In the case of wooden structure, spar varnish provides a good dope–resistant finish and an epoxy primer is suitable for metal structures.

Dopes

Dope consists of a number of resins dissolved in a solvent to permit application by brush or spray. This formulation is then modified with plasticisers and pigments to add flexibility and the required colour. There are two types of dope in use:

- cellulose nitrate (nitrate dope)
- cellulose acetate butyrate (butyrate or CAB dope)

The main difference between the two types of dope is the film base. In nitrate dope a special cotton is dissolved in nitric acid, whilst in butyrate dope cellulose fibres are dissolved in acetic acid and mixed with butyl alcohols. The plasticisers in the two dopes are also different, as are the resin balance and solvent balances. Dope must be stored under suitable conditions, and has a tendency to become acid with age.

Aluminium Dope

To make the fabric lightproof and so prevent damage from ultra–violet radiation, an aluminium dope is used. This is usually supplied ready mixed but can be prepared by mixing aluminium paste or powder in clear dope but it is essential that the materials are obtained from an approved supplier and mixed in accordance with the manufacturer's instructions.

Thinners

Dopes are formulated in such a way that the solid constituents are suspended in the appropriate solvents. It will normally be necessary to thin or reduce the dope to make it suitable for spraying. It is important that only the thinners recommended by the manufacturer of the dope is used. The amount of thinners is determined from the manufacturer's recommendations. A retarder, or anti–blush thinners, is a special type of thinners with slow–drying solvents. By drying more slowly they prevent the temperature drop and consequent moisture condensation that cause blushing in a dope finish.

FOR TRAINING PURPOSES ONLY!

© Lufthansa Technical Training

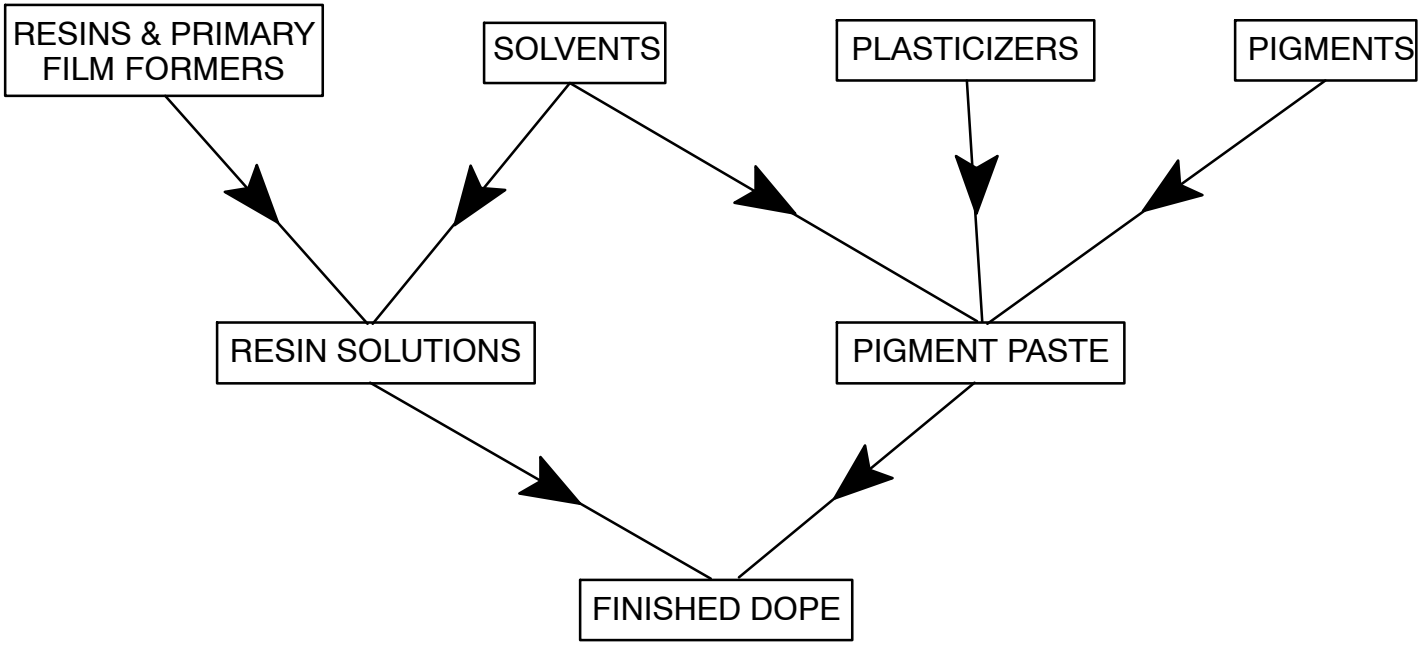

Figure 91 Dope Constituents

FOR TRAINING PURPOSES ONLY!

© Lufthansa Technical Training

Fungicides

Since natural fabrics can be attacked by various forms of mildew and fungus, it may be necessary to provide protection for cottons and linens when doping. This is achieved by having a fungicide added to the first coat of dope. The dope is usually supplied ready mixed but can be prepared by using a fungicidal paste obtained from an approved supplier. The fungicidal paste should be mixed with the clear dope in accordance with the manufacturer's instructions. Since mildew or mould form on the inside of the fabric, it is important to ensure that this first coat of dope completely penetrates the fabric.

WARNING: ALL FUNGICIDES ARE POISONOUS. TO PREVENT DAMAGES TO SOMEBODYS HEALTH IT IS IMPORTANT TO FOLLOW THE STANDARD SAFETY PRECAUTIONS CONCERNING THE WORK WITH TOXIC MATERIALS.

FOR TRAINING PURPOSES ONLY!

© Lufthansa Technical Training

THIS PAGE INTENTIONALLY LEFT BLANK

FOR TRAINING PURPOSES ONLY!

© Lufthansa Technical Training

Working with Dope

Safety precautions when working with dope

The storage and use of dopes is covered by various safety regulations, like:

- Dopes are highly flammable, because of the flammability of the solvents that are used. Furthermore the produced vapour is heavier than air.
- One of the most common causes of ignition is a spark produced by the discharge of static electricity. This has to be prevented by grounding the part.
- The mixture of spray of cellulose nitrate and zinc chromate can be self ignitable.
- The fumes created during the spraying process are hazardous to health as well as being a fire risk. Proper operator protection must be provided as recommended in the dope manufacturer's technical literature. At the first sign of any irritation of the skin or eyes, difficulty in breathing or a dry cough, the operator should stop work and seek medical advice.
- Electrical equipment to be used in the spray shop must be of such a nature that it cannot ignite the vapours that will be present.

Working conditions when applying dope

In order to accomplish a proper dope job, it is important to control both the temperature and humidity of the air in the spray shop. In addition to this it is necessary to maintain sufficient air flow through the shop.

Air temperature should be maintained between approximately 21° and 26° C (70° to 79° F) for best spraying results.

In addition to the proper control of air temperature, the humidity of the air must also be controlled. The desirable range of air humidity is 45 to 50. Satisfactory work can be produced with air humidity as high as 70 or as low as 20.

In order to produce a satisfactory dope film, it is vitally important that all brushes, spray equipment and containers should be scrupulously clean. It is important that oil and water traps in the air lines are properly cleaned and that air reservoirs are drained of accumulated moisture.

Preparation prior to doping

An inspection should be made of the fabric–covered component to verify the following points:

- The structure has been painted with dope–proof paint where required
- Correct and secure attachment of the fabric to the structure
- Correct allowance for tautening of the cover where this is of a natural fabric such as cotton or linen. If the cover is too slack, no amount of doping will rectify this. If it is too tight, a lightweight structure could easily be distorted
- All dust has been removed from the fabric
- The fabric has reached the temperature of the air in the spray shop.
- Plastics components, such as windows and windscreens, are adequately protected against solvent attack
- The dope has the correct temperature, it is mixed and then thinned to a suitable consistency for brush or spray application as appropriate.

FOR TRAINING PURPOSES ONLY!

© Lufthansa Technical Training

THIS PAGE INTENTIONALLY LEFT BLANK

FOR TRAINING PURPOSES ONLY!

© Lufthansa Technical Training

Application of Dope

Application to natural fabric

The best looking and most durable film is produced by using multiple coats of a dope that is low in solids. The dope scheme is a schedule listing the number and order of coats of each type of dope. Typical examples of schemes detailed in British Standard BS X26 are given in the tables here and opposite.

Priming Coats

This name is given to the first coats applied to the raw fabric. The first coat of dope provides the foundation for all the subsequent coats and as such its mechanical attachment to the fabric is very important. This mechanical attachment is formed by the dope encapsulating the fibres of the fabric. Nitrate dope has much better properties with regard to encapsulating the fibres and is therefore preferred for the first coat.

The dope should be thinned by 25 to 50 and applied by brush. The dope should be worked into the fabric to ensure adequate penetration, but not to the point where it drips through to the opposite surface. Since organic fabrics are subject to attack by mildew, a fungicide should be added to the dope used for this first coat.

After the dope has dried for a minimum of 1 hour, the tapes, drainage eyelets or grommets and inspection panel rings may be applied. A heavy coat of nitrate dope should be brushed on where required and the tape laid into it, working it down to the surface and rubbing out any air pockets as the tape is laid. A further coat of clear dope is brushed over the top of the tapes.

Filling coat on natural fabric

When the first butyrate coat has fully dried, the fabric will feel rough due to the short fibre ends (the nap) standing up. This nap should be very lightly sanded off, using dry sandpaper, to leave a smooth finish. The surface should then be rinsed clean with water and dried thoroughly.

Two full wet cross–coats of butyrate dope should now follow; a cross–coat is a coat of dope sprayed on in one direction and then covered with a second coat at right angles to it before the first coat dries. These in turn should be followed with one good cross–coat of aluminium dope after lightly sanding the clear dope to encourage adhesion. The aluminium coat is in its turn lightly wet sanded to produce a smooth surface and the residue rinsed off with water.

Finishing Coats

The finishing coats of pigmented butyrate dope may now be sprayed on. The number of coats will be determined as a balance between quality and cost but should not be less than three. A high gloss finish is obtained by lightly sanding each coat when dry and spraying multiple thin coats rather than several thick coats. The use of a retarder in the colour coats will allow the dope to flow out and form a smoother film. The final coat should be allowed to dry for at least a month before it is polished with rubbing compound and then waxed. The surface should be waxed at least once a year with a hard wax to reduce the possibility of oxidation of the finish.

FOR TRAINING PURPOSES ONLY!

© Lufthansa Technical Training

LOW TAUTNESS SCHEME BS X26

Dope	Weight		Normally obtained in the following number of coats
	g/m²	oz/yd²	
(a) Transparent tautening dope	68	2.0	3 or 4
(b) Aluminium non-tautening finish	34	1.0	2
(c) Pigmented non-tautening finishes	34	1.0	1 or 2
(d) Transparent non-tautening finish	34	1.0	1 or 2

NOTE: where an aluminium finish is required, it is necessary to apply only (a) and (b), followed by (d) if required.

MEDIUM TAUTNESS SCHEME BS X26

Dope	Weight		Normally obtained in the following number of coats
	g/m²	oz/yd²	
(a) Red oxide tautening dope	68	2.0	3
(b) Aluminium tautening finish	34	1.0	2
(c) Pigmented non-tautening finishes	34	1.0	1 or 2
Where an aluminium finish is required, the scheme should be:-			
(d) Red oxide tautening dope	102	1.0	1 or 2
(e) Aluminium non-tautening finish	34	3.0	4
Where a glossy finish is required, follow with:-		1.0	2
(f) Transparent non-tautening finish	34	1.0	1 or 2

HIGH TAUTNESS SCHEME BS X26

Dope	Weight		Normally obtained in the following number of coats
	g/m²	oz/yd²	
(a) Red oxide tautening dope	25.5	0.75	1
(b) Transparent tautening dope	161	4.75	6 or 7
(c) Aluminium tautening dope	34	1.0	2
(d) Pigmented non-tautening finishes	34	1.0	1 or 2
Where an aluminium finish is required, the scheme should be:-			
(e) Red oxide tautening dope	25.5	0.75	1
(f) Transparent tautening dope	195	5.75	8
(g) Aluminium non-tautening finish	34	1.0	2
Where a glossy finish is required, folow with:			
(h) Transparent non-tautening finish	34	1.0	1 or 2

NOTE: A tolerance of +/- 20% is permissable on any of the weights given in these tables.

Application to polyester-fibre fabric

Polyester–fibre fabrics are being increasingly widely used for covering aircraft because of their long life and resistance to deterioration. It is normal to still see the polyester-fibre fabric after applying the various coatings of dope.

The application of dope to polyester fabrics just differs from the application to natural fabrics in the following priming coats.

Priming Coats

Although all dopes have a tautening effect to fabrics, the application to polyester-fibres is not done to achieve this effect. Polyester–fibre fabrics are heat shrunk when the structure is covered. Unlike natural fibres the polyester filaments are not wet by the dope, so the mechanical bond is quite compilicated.

FOR TRAINING PURPOSES ONLY!

© Lufthansa Technical Training

For a good bonding the fibres have to be totally encapsulated by the first coat of dope. The first coat must be nitrate dope thinned in the ratio of two or three parts of dope to one part of thinners.

Certain additives are approved by the material manufacturer for use with the first coat for improving adhesion to the fabric. However, since polyester is not organic, there is no need for a fungicide to be added to the first coat of dope.

Application to glassfibre fabric

Glass−fibre fabric has a loose weave which tends to make it difficult to apply to aircraft structures. To overcome this problem it is pre−treated with butyrate dope.

The application of dope to glassfibre fabrics just differs from the application to natural fabrics in the following priming coats.

Priming Coats

Nitrate dope must not be used under any circumstances with this type of fabric. When the first coat of clear butyrate dope is sprayed on, it has to be checked that the dope is not blown through the fabric. After the first coat has dried, further coats of butyrate dope should be sprayed on, each a little heavier than the one before it, until the weave fills and the fabric tautens; this may take as many as five coats. Tapes, drainage eyelets or grommets and inspection rings are applied in a coat of butyrate dope.

FOR TRAINING PURPOSES ONLY!

© Lufthansa Technical Training

THIS PAGE INTENTIONALLY LEFT BLANK

FOR TRAINING PURPOSES ONLY!

© Lufthansa Technical Training

INSPECTION METHODS, TYPES OF DEFECTS AND REPAIR OF FABRIC COVERING

Checking of Fabric

General

Several factors like the type of operation, climate or storage conditions have a large influence on the deterioration of the fabric covering.

In addition the covering will not deteriorate uniformly. That is why the fabric coverings have to be checked at the periods specified in the Maintenance Schedule.

Portable Tester

The fabric is tested with a spring pre-loaded penetrating cone. When inspecting fabric, the tester should be held at 90° to the surface and pressure applied towards the fabric in a rotary motion, until the sleeve flange touches the surface. The degree to which the cone has penetrated the fabric is indicated by the length of plunger showing above the sleeve and this is marked either by coloured bands or a graduated scale.

The test should be repeated at various positions and the lowest reading obtained should be considered representative of the surface as a whole.

All punctures produced by the tester should be repaired with a 50 mm or 75 mm (2 in or 3 in) diameter doped fabric patch.

Laboratory tests

If the result of the portable tester is unsatisfactory, samples of fabric should be sent to a laboratory where they are bursting strength tested according to the specification of the type of fabric. These tests require the use of samples approximately 87 mm (3.5 in) in diameter.

In these laboratories tensile strength tests specified for new fabrics are also made and require the use of samples each 62 mm x 300 to 400 mm (2.5 in x 12 to 16 in).

FOR TRAINING PURPOSES ONLY!

© Lufthansa Technical Training

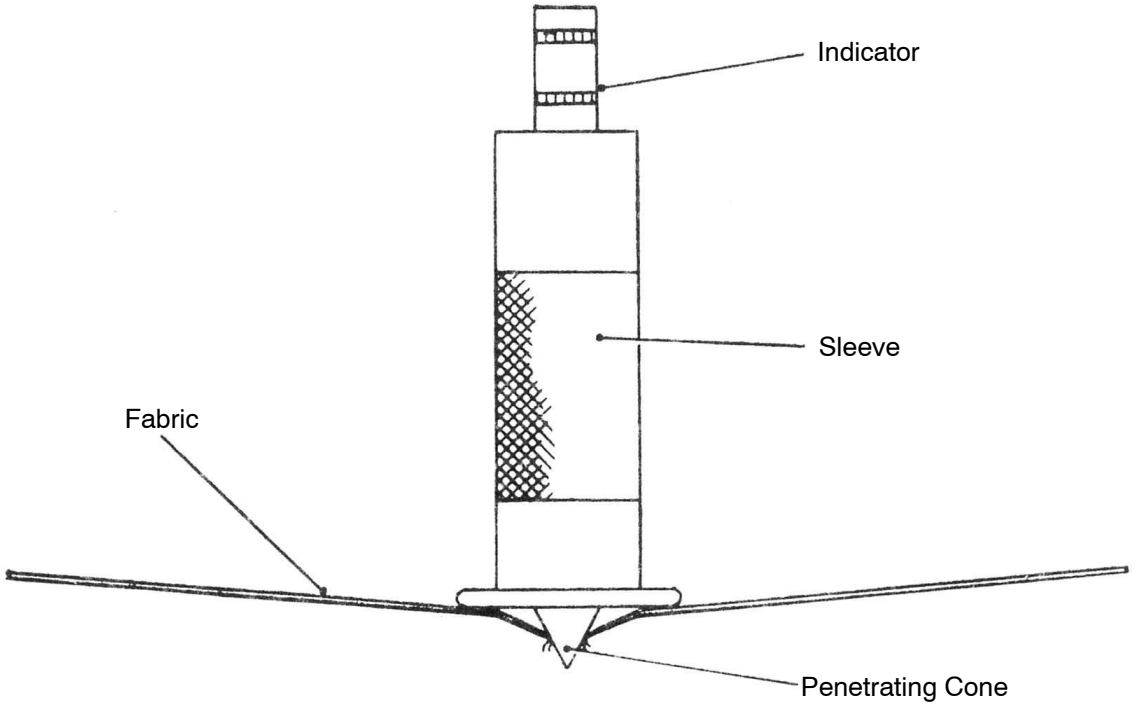

Figure 92 Portable Tester

FOR TRAINING PURPOSES ONLY!

© Lufthansa Technical Training

Repairs to Fabric Coverings

General

If the fabric has been damaged extensively, it is usually impractical and uneconomical to make satisfactory repairs by sewing and patching. The extent and location of damage to the fabric that may be repaired will be detailed in the repair section of the aircraft manual concerned

However, the replacement of large fabric panels, particularly on one side of a component, may lead to distortion of the structure and it may be advisable to completely re−cover the component.

Cuts and tears in fabric are often caused by foreign objects. Any damaged structure should be made good and fabric repairs carried out according to the type of damage

The internal structure should be inspected for loose objects such as stones, remains of birds, insects, etc, and any structural damage made good.

Using thinners, all dope should be removed from the fabric surrounding the damaged area before any stitching is carried out, since doped fabric will tear if any tension is applied to the repair stitches.

Repairs by stitches

The herring−bone stitch (also known as the 'ladder' or 'baseball' stitch) should be used for repairing straight cuts or tears which have sound edges.

- There should be a minimum of two stitches to the centimetre (four stitches to the inch) and the stitches should be 6 mm (0.25 in) from the edge of the cut or tear.
- The stitches should be made with a lock knot every 150 mm (6 in).
- After the stitching has been completed, 25 mm (1 in) wide serrated tape should be doped over the stitching.
- A square or rectangular fabric patch should then be doped over the whole repair, ensuring that the edges of the patch are parallel to the warp and weft of the fabric covering and that they overlap the repair by 37 mm (1.5 in).
- The original doping scheme should then be restored.

Repairs by wood frames

Repairs to cuts and tears with jagged edges can be repaired by using the Woods frame method described for inspection panels previously. Repairs of up to 50 mm (2 in) square may be made, provided they are clear of seams or attachments by a distance of not less than 50 mm (2 in).

- The affected area should be cleaned with thinners or acetone.
- The Woods frame should be doped into position surrounding the damaged fabric and, if the frame is of the square type, the edges should be parallel to the weft and warp of the covering.
- When the dope has dried, the damaged portion of the fabric should be cut out and the aperture covered by a fabric patch.
- If wood frames are not readily available they can be made from cellulose sheet 0.8 mm (0.030 in) thick with minimum frame width of 25 mm (1 in).

FOR TRAINING PURPOSES ONLY!

© Lufthansa Technical Training

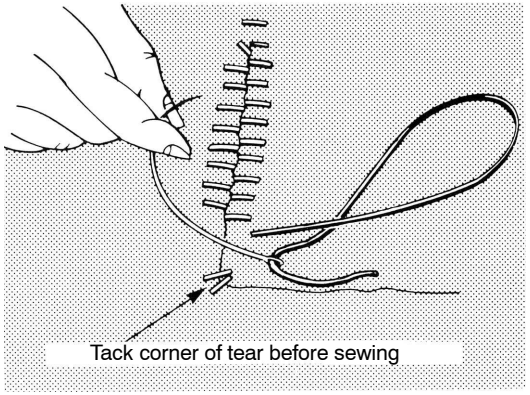

1. Sew up the tear.

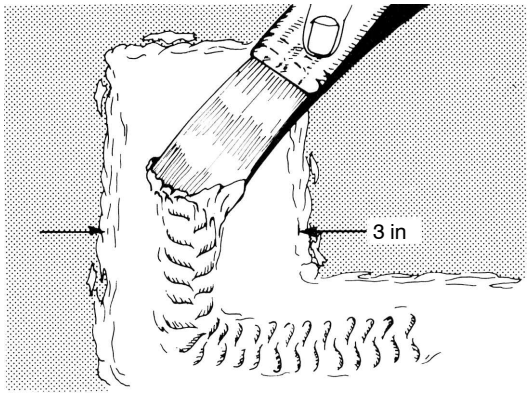

2. Apply dope to sewn area.

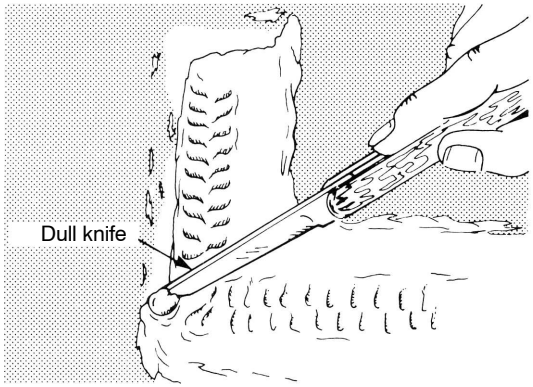

3. Scrape off old dope.

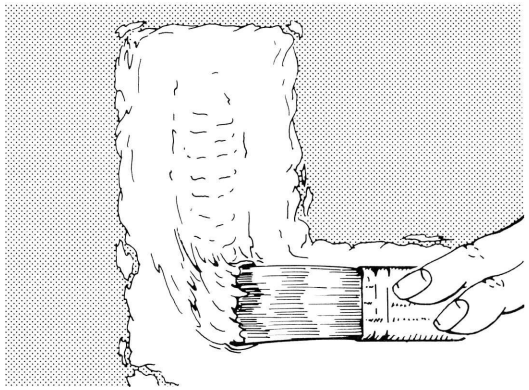

4. Apply new dope.

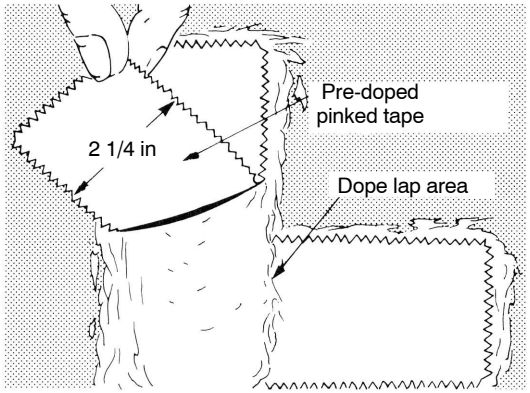

5. Press down patching tapes.

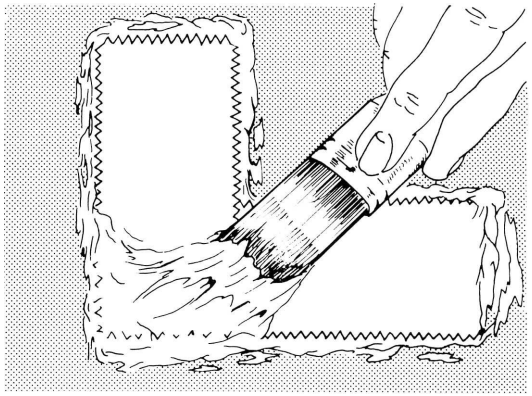

6. Dope entire patch.

Figure 93 Repairs by Stitches

FOR TRAINING PURPOSES ONLY!

© Lufthansa Technical Training

REPAIRS TO FABRIC COVERINGS (CONTD.)

Repair by Darning

Irregular holes or jagged tears in fabric may be repaired by darning provided the hole is not more than 50 mm (2 in) wide at any point. The stitches should follow the lines of the warp and weft and should be closely spaced as shown in the adjacent figure. The whole repair should be covered with a serrated fabric patch in the usual way, with an overlap of 37 mm (1.5 in) from the start of the dam.

Repair by Insertion

For damage over 100 nun (4 in) square, insertion repairs are generally used, either of the two methods described below being suitable.

„Normal Insertion Repair“

- The damaged area of the fabric should be cut out to form a square or rectangular hole with the edges parallel to the weft and warp.
- The comers of the hole should then be cut diagonally, to allow a 12 mm (0.5 in) wide edge to be folded under the fabric.
- This should be held in position with tacking or hemming stitches.
- The patch should be made 25 mm (1 in) larger than the cut–out area and its edges should be folded under for 12 mm (0.5 in) and tacked in position. In this condition the size of the insertion patch should be similar to, or slightly smaller than, that of the cut–out area.
- The insertion patch should be held in position inside the cut–out area with a few tacking stitches and then sewn in position using a herring–bone stitch.
- A 25 mm (1 in) wide tape should then be doped over the seams.
- For small repairs a square or rectangular cover patch, with frayed or serrated edges, should be doped in position ensuring that the patch overlaps the edge of the tape by 31 mm (1.25 in). Where the size of the insertion patch is more than 225 mm (9 in) square, a 75 mm (3 in) wide fabric serrated tape is often used.
- The original finish should then be restored.

FOR TRAINING PURPOSES ONLY!

© Lufthansa Technical Training

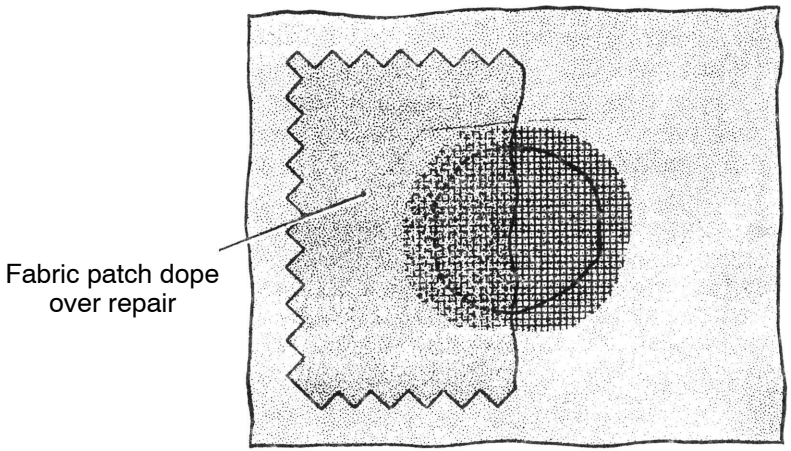

Repair by darning

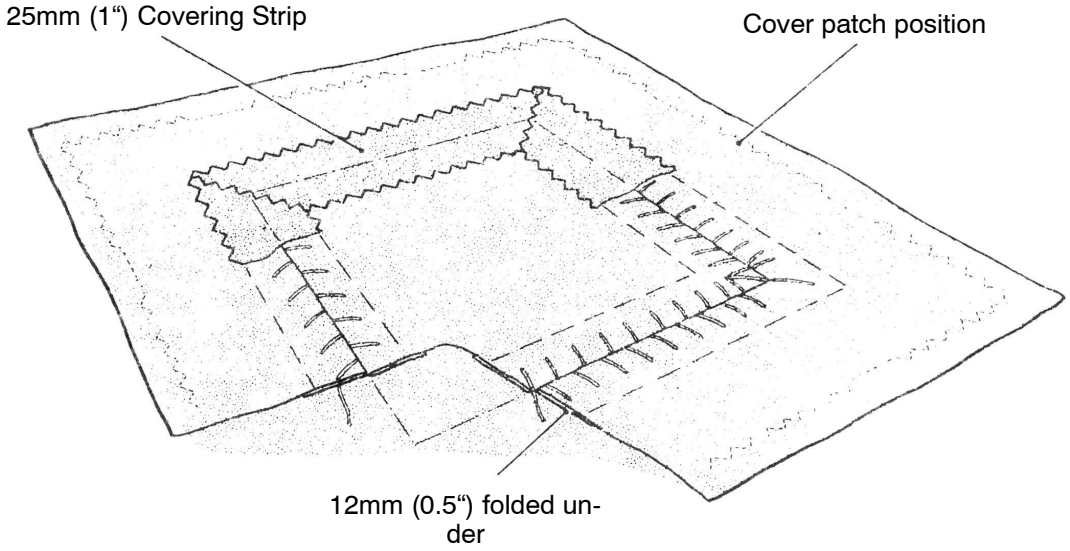

„Normal Insertion“ Repair

Figure 94 Repair by Darning or „Normal Insertion“

FOR TRAINING PURPOSES ONLY!

© Lufthansa Technical Training

„Alternative Insertion Repair“

- This consists of cutting away the damaged fabric as described previously.
- The edges of the aperture as well as the edges of the insertion patch are turned upwards.
- The insertion patch is attached to the fabric cover by stitching along the folded–up edges as near to the contour of the component as practicable (i.e. about 1 mm (0.0625 in) above the surface) using the boot stitch
- The edges are then doped down.
- The repair covered with a doped–on fabric patch.

„Boot Stitch“

A single, well–waxed linen thread should be used for the boot stitch. The stitches should be made as shown in the figure adjacent and the ends of both threads tied together in a lock knot every 150 mm (6 in), and at the end of a seam.

FOR TRAINING PURPOSES ONLY!

© Lufthansa Technical Training

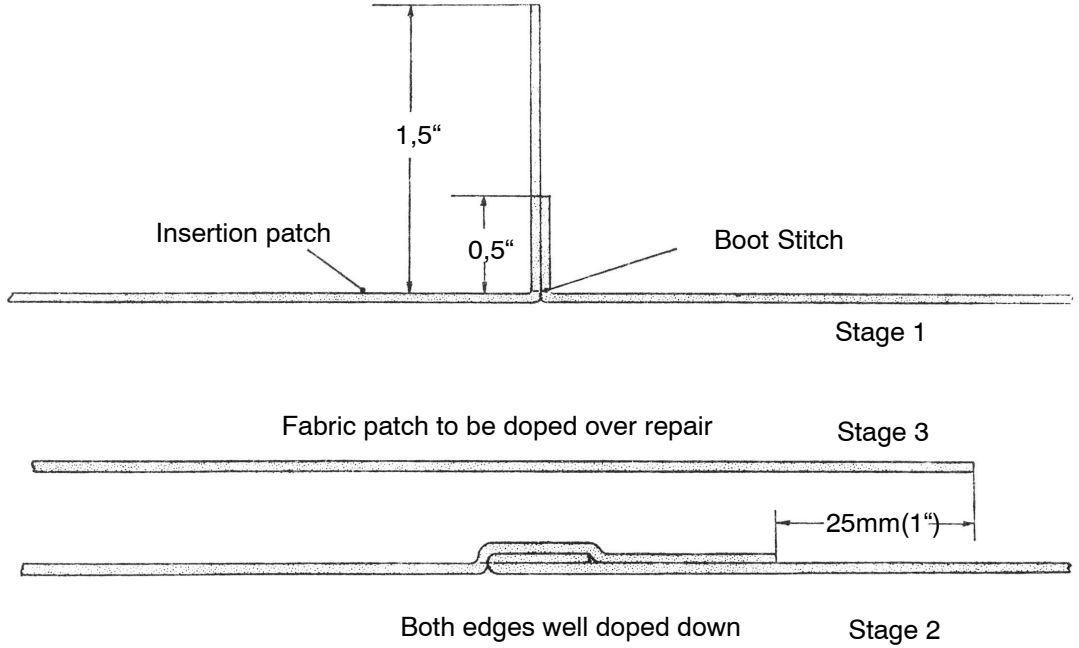

Figure 95 Alternative Insertion Repair

FOR TRAINING PURPOSES ONLY!

© Lufthansa Technical Training

M6.4 CORROSION

FORMATION BY CHEM.– AND GALVANIC PROCESSES, MICROBIOLOGICAL & STRESS

Corrosion General

INTRODUCTION

Definition

In the standardization, corrosion (from the latin: corrodere, „gnawing away“), is defined as an undesirable, natural reaction of materials with substances in their environment.

This reaction leads to a measurable change of the material and causes function-impairment of the component or system made of this material.

Corrosion of Metallic Materials

Corrosion of metals occurs due to the tendency of most metals, to return to their natural state, by combining with the atmospheric oxygen.

The reason for this is, that metals have been eliminated from chemical compounds by applying high energies, and seek to turn back into them.

Noble metals, such as gold and platinum, do not corrode since they are chemically pure in their natural state.

Pure aluminium does not have the tendency to corrosion either, but does not have the required strength to be used in strutural aircraft construction and is therefore only used in combination with other matals, as an alloy.

Due to the fact that metals have a crystalline structure, corrosion can occur on the surface of these grains, which are less resistant. This happens at the boundaries between grains, resulting in intercristalline corrosion.

The different metals and alloys have a wide range of corrosion resistance, which has to be considered when chosing the material.

The tendency of most metals to corrode creates one of the major problems in manufacturing and maintenance of aircraft. This particularly applies to areas where adverse environmental or weather conditions exist.

FOR TRAINING PURPOSES ONLY!

© Lufthansa Technical Training

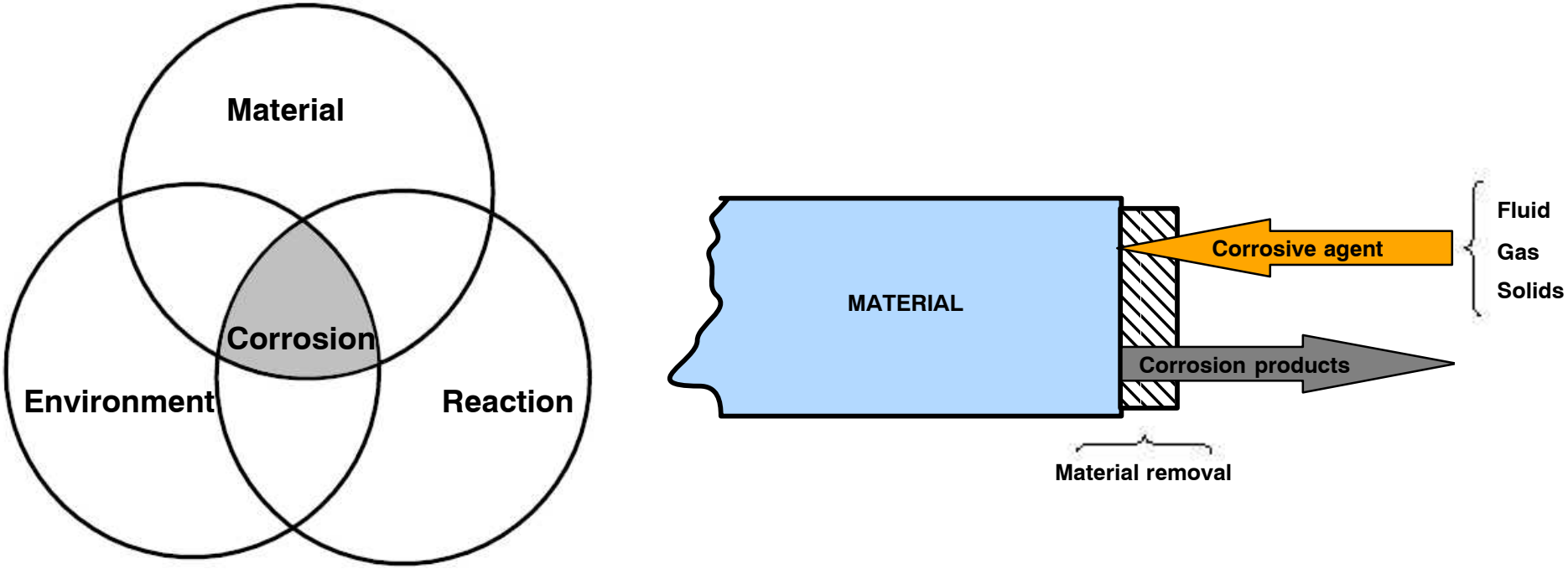

Figure 96 Corrosion on Metals

FOR TRAINING PURPOSES ONLY!

© Lufthansa Technical Training

Occurance and Growth of Corrosion

Introduction

Most metals are subject to corrosion, but corrosion can be minimized by the use of corrosion-resistant metals and suitable finishes (alodine, anodized aluminium, primer), for materials which are not corrosion-resistant.

The principal material used in airframe structure is high-strength aluminium alloy sheet coated (clad) with a pure aluminium coating (ALclad) which is highly resistant to corrosion attack.

Occurance of Corrosion

However, due to the accumulation of airborne salts and/or industrial pollutants together with an electrolyte (e.g. moisture), even clad material will corrode after some time.

In addition, undesired contamination by leaked liquids, such as hydraulics, lavatory-/galley-spillage, cargo, etc, happens on the aircraft.

Growth of Corrosion

Once the ALclad surface is broken, rapid deterioration of the high-strength aluminium alloy beneath occurs. The spreading of the corrosion increases exponentially.

Influence Factors of Corrosion

The following factors influence metal corrosion and the rate of corrosion:

- Type of metal and/or metal combination
- Anode and cathode surface areas (in galvanic corrosion)
- Temperature
- Heat treatment and grain direction of the crystalline structure of the metal.
- Presence of electrolytes (hard water, salt water, battery fluids etc) and their aggressiveness.
- Presence of different concentrations of the same electrolyte
- Presence of oxygen.
- Presence of biological organisms.
- Mechanical stress on the corroding metal.
- Time of exposure to a corrosive environment.

Preventive Measures

Other corrosion-sensitive metals commonly used in airframe structure (such as non-clad high-strength aluminium alloys, steel and magnesium alloys) require special preventive measures to guard against corrosion.

- Steel (except most stainless steels) and other metals, such as brass and bronze, require cadmium plating, zinc plating and aluminium coating etc.
- Aluminium alloys are usually anodized (a chemical coating), or aluminium applied plating, then primed and possibly top-coated with paint.
- Magnesium and magnesium alloys are highly susceptible to corrosion attack, especially where airborne salts and/or industrial pollutants are present and require special chemical and electro-chemical treatments and paint finishes.

FOR TRAINING PURPOSES ONLY!

© Lufthansa Technical Training

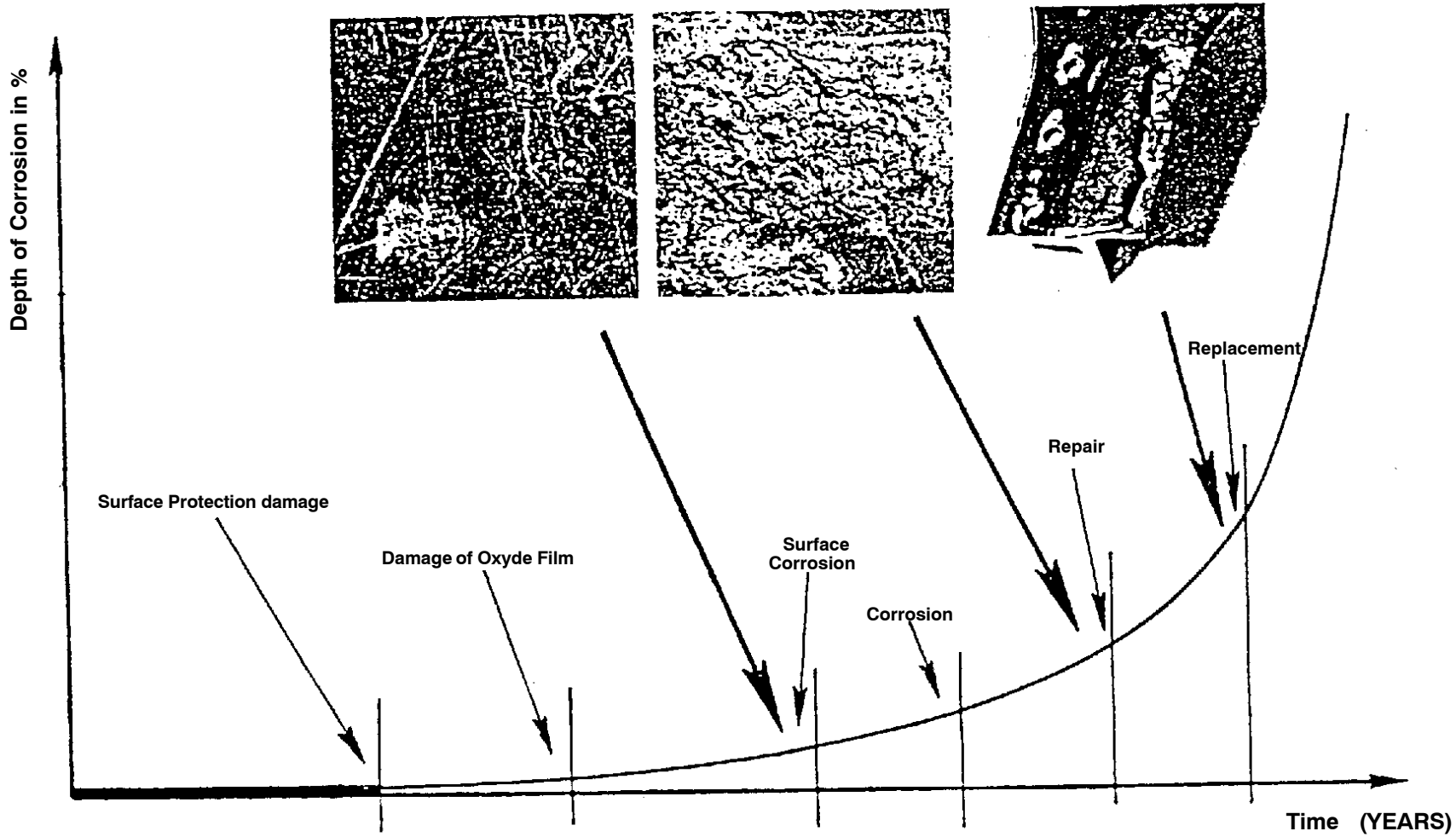

Figure 97 Origin and Expansion of Corrosion

FOR TRAINING PURPOSES ONLY!

© Lufthansa Technical Training

General Corrosion Processes

General

For the creation of corrosion products, chemical and physical conversion processes are necessary. These physiochemical interactions of metal and its evironment lead to a change in the characteristics of the metal, which leads to a loss of the metallic character.

Electrochemical Reaction

The corrosion processes of the electrochemical reaction take place at the surface of the electrode (metal) under the influence of an electrolyte (electrically conductive fluid), e.g. water, acids, lyes or saline solutions. This creates a half cell.

The corrosion process created by this, includes two chemical changes:

- Anodic changes occur at the affected metal.

  At this, positively charged metal-ions are emitted to the electrolyte, and leave behind negatively charged electrodes in the metal, which means that the metal atom oxidizes.
- at the same time, cathodic changes occur at the corrosion media.

  At this, the dissolved ions take in electrons and deposit as metal atoms on the electrode surface, which means that the metal ions are reduced.

Galvanic Cell

Because the electron potential of a single half cell is not immediately measurable, it can only be measured as stress difference between two half cells.

At this, a galvanic cell is formed, which consists of two half cells of a nobel metal and a base metal, which serve as eletrodes and are each in a sulfate solution (electrolyte).

A voltage is generated between the two electrodes, whose size depends on the material of the electrodes. The galvanic cell made of copper and zinc, for example, generates a voltage of 1,13 volts.

The current flowing in a galvanic cell, which was created as mentioned above, can even be technically used, e.g. for a battery.

FOR TRAINING PURPOSES ONLY!

© Lufthansa Technical Training

Electrode reaction

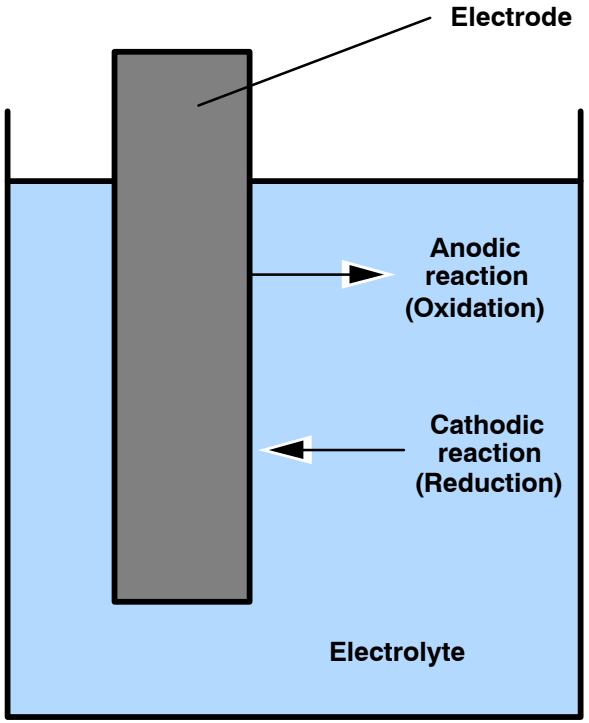

Oxidation: emitting of electrons

Reduction: absorbing of electrons

Galvanic element

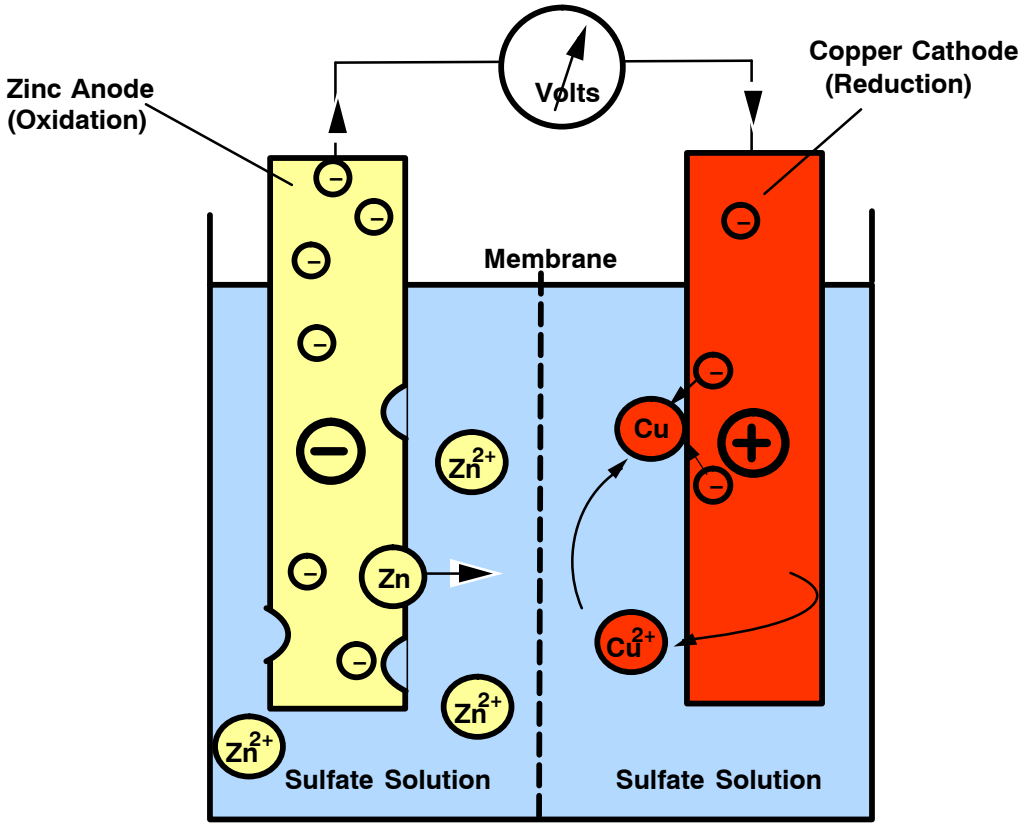

Figure 98 Electrode Reaction and Galvanic Element

FOR TRAINING PURPOSES ONLY!

© Lufthansa Technical Training

GALVANICALLY INDUCED CORROSION

Oxidation

Almost all metals have the tendency to combine with atmospheric oxygen in the course of time. Hereby, minerally metal oxides (oxide, hydroxide, or sulfate), are created. Therefore, this is also called oxidation. The hereby created metal oxides are closely related to ores bauxit, from which the metal has been derived before, in terms of material.

Some materials, such as stainless steel, pure aluminium and titanium, can form a metal oxide layer on their surface due to oxygen uptake, which is gas-tight and so firmly bonded to the metal, that any further oxidation comes to a standstill.

Materials such as aluminium or magnesium alloys, however, form a metal oxide layer, which is incoherent, open-pored, and loose (amorphous). Therefore, oxygen can further intrude here and continue the corrosion process, which leads to massive damage of the material.

Chemical Corrosion

Especially technical acids such as sulphuric acid, sulphurous acid and other aggressive industrial products, which often occur in the atmosphere, are the reason for chemical corrosion in the airframe area.

Corrosive media hereby primarily affect the metallic surfaces of textured sheets and components directly, which means that the corrosive media reacts with the material of the component. This happens without the presence of a electrolyte.

Electrochemical Corrosion

Another reason for other, sometimes severe occurance of corrosion on aircraft is electrochemical corrosion, which is galvanic dissolution. Electrochemical corrosion occurs most common between adjacent components, whose metals have different electrochemical potential, under the simultaneous influence of an electrically conductive fluid or moisture, which is called electrolyte.

Especially for alloyed metalls, such as aluminium-zinc-alloys, electrochemical corrosion between the alloying partners can have dangerous effects (intergranular corrosion).

FOR TRAINING PURPOSES ONLY!

© Lufthansa Technical Training

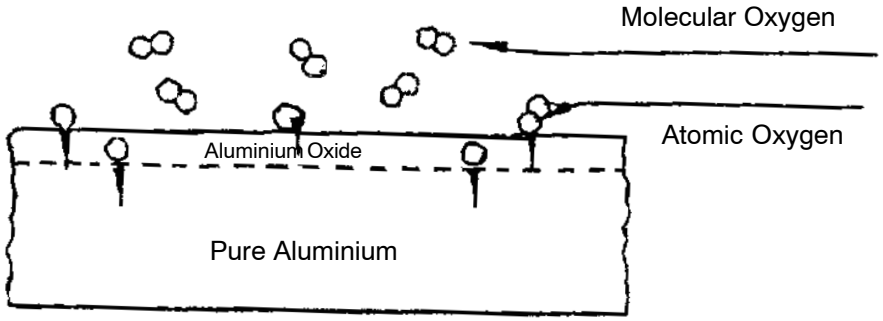

OXIDATION

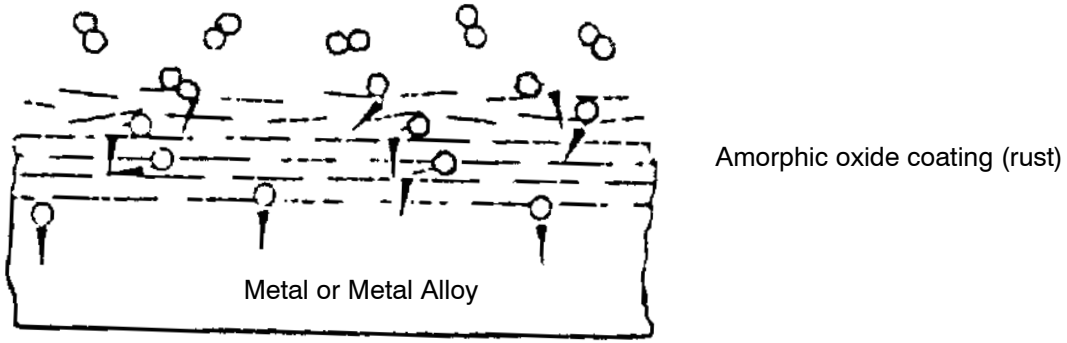

CHEMICAL CORROSION

Figure 99 Chemical Corrosion

FOR TRAINING PURPOSES ONLY!

© Lufthansa Technical Training

MICROBIOLOGICALLY INDUCED CORROSION

Biological Corrosion

Biological corrosion, also called microbes corrosion, is caused by a direct chemical attack of the metabolic products of microorganisms.

At this, microorganisms such as algas, mushrooms or bacteria are settling on solid surfaces, which, step by step, form a solid biofilm by their further propagation. The metabolic products of these microorganisms contain aggressive substances, such as hydrogen sulfide, sulfuric acid or nitric acid, and are therefore able to corrode the affected component surfaces directly and chemically decompose them.

This type of corrosion is a big problem, especially in tanks and fuel systems, because the concentration of microorganisms and their end products can clog even pipes, pumps and filters.

CORROSION INDUCED BY MECHANICAL STRESS

Stress Corrosion

When mechanical forces act on a component, this can lead to corrosion, which is then called stress corrosion.

At this, static loads and/or dynamic tensile loads acting on a metallic component can lead to this type of corrosion, if the component is also subjected to a corrosive medium.

It can be distinguished in:

- static loads = e.g. residual stress of the material
- dynamic load = alternating loads which act on a component

In particular, special production processes, such as extrusion and forging, can lead to the occurance of residual stress in a metallic component, which promote corrosion.

FOR TRAINING PURPOSES ONLY!

© Lufthansa Technical Training

MICROBIAL CORROSION

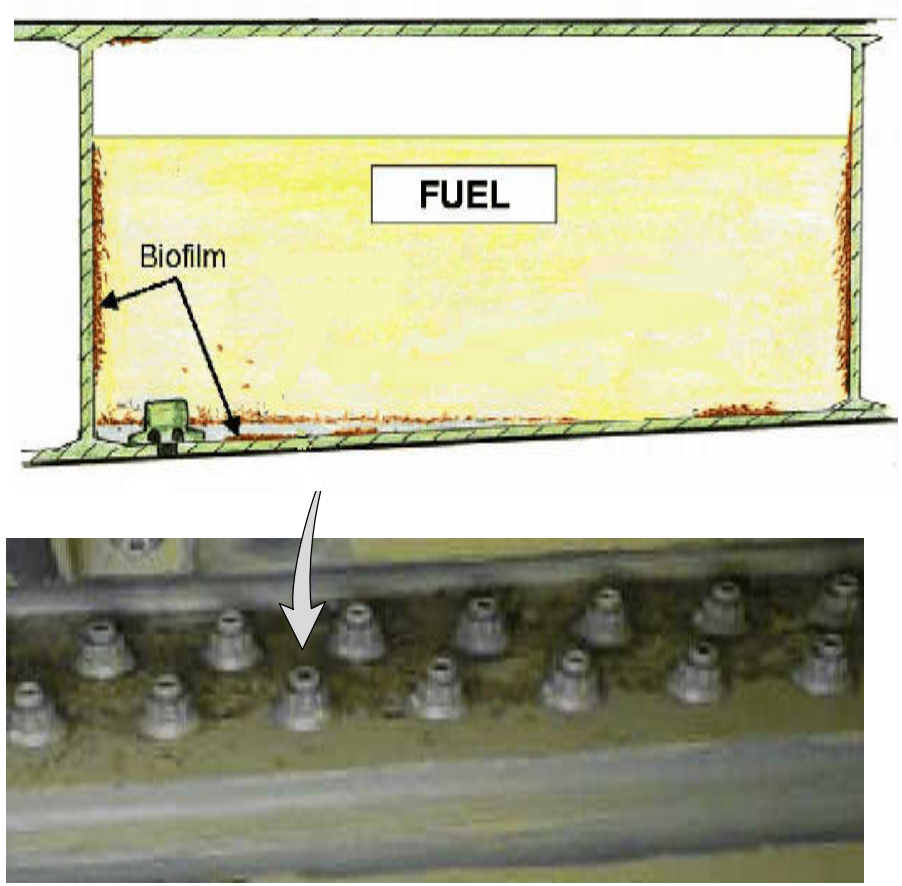

STRESS CORROSION

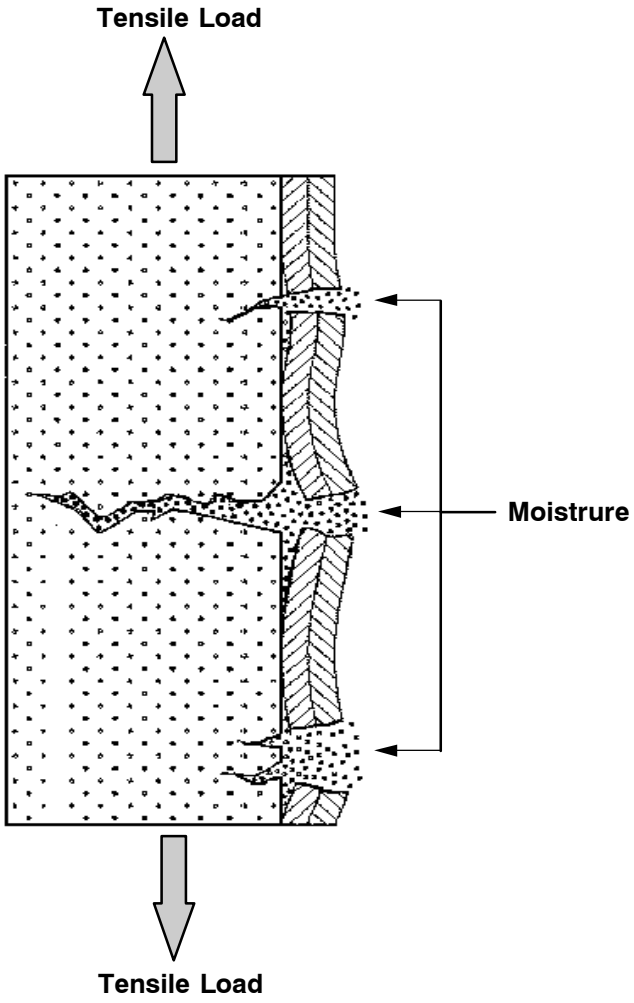

Figure 100 Microbial and Stress Corrosion

FOR TRAINING PURPOSES ONLY!

© Lufthansa Technical Training

CORROSION, -TYPES, -IDENTIFICATION, -CAUSES, -SUSCEPTIBILITY AND MATERIAL TYPES

Corrosion Identification on Metals

Steel

Corrosion of steel is easily recognized because the corrosion product is red rust.

When iron-based alloys corrode, dark corrosion products usually form first on the surface of the metal. These products are protective. However, if moisture is present, this ferrous oxide coating is converted to hydrated ferric oxide, which is red rust. This material will promote further attack by absorbing moisture from the air.

The most practical means of controlling corrosion of steel is complete removal of the corrosion products by mechanical means and by maintaining the protective coating system (usually a plating, often combined with a paint system).

Aluminium

Aluminium and its alloys exhibit a wide range of corrosion such as crevice, exfoliation, stress and fretting corrosion.

Both bare and clad aluminium alloys resist corrosion in non−marine areas. Where airborne salts and/or industrial pollutants are present, all aluminium alloys require protection.

The corrosion product of aluminium is a white-grey powdery material which can be removed by mechanical polishing or brushing with materials softer than the metal.

General surface attack of aluminium penetrates slowly but is accentuated with the presence of dissolved salts. Considerable attack can usually take place before serious loss of structural strength.

FOR TRAINING PURPOSES ONLY!

© Lufthansa Technical Training

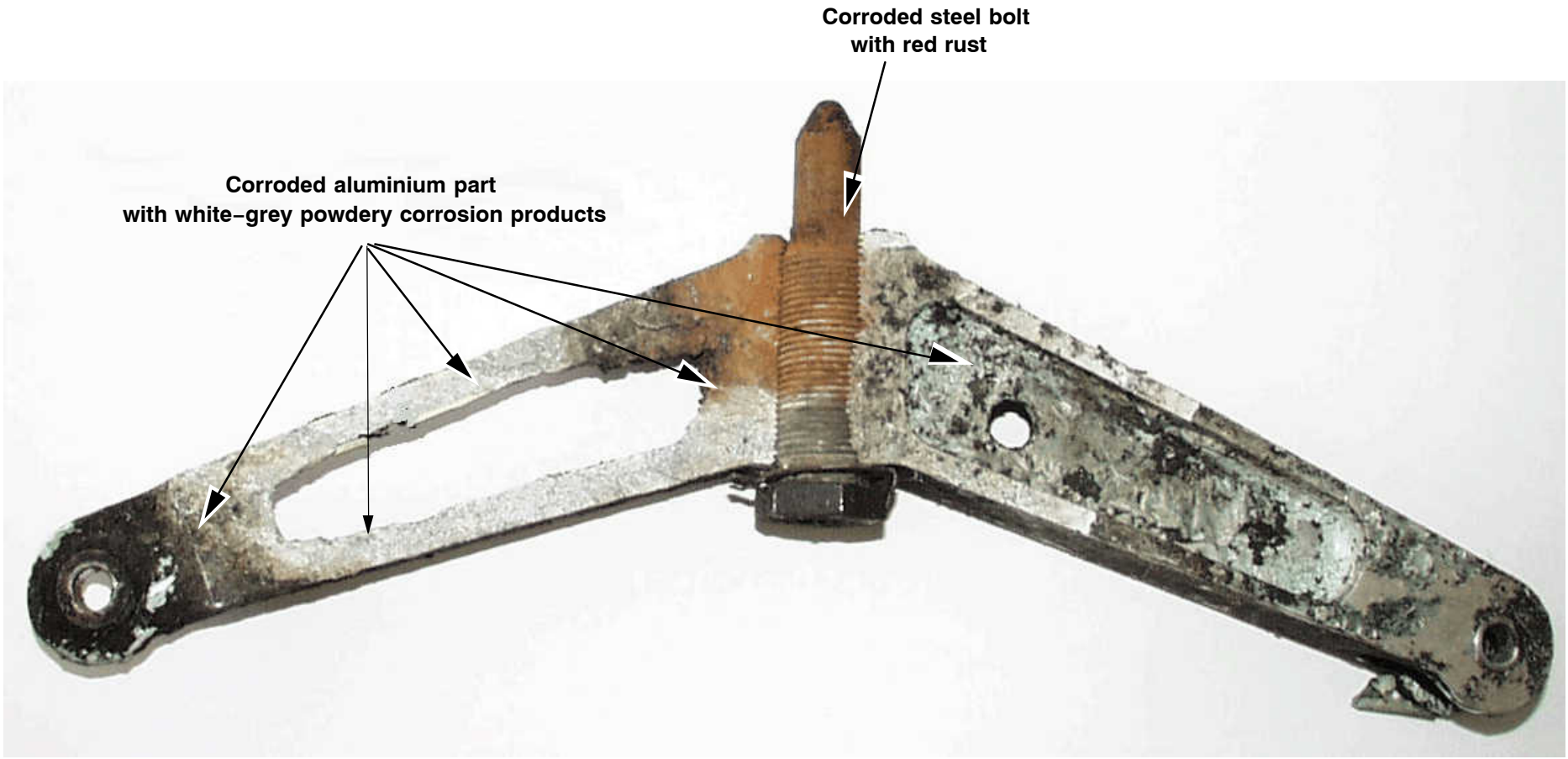

Figure 101 Corrosion of Steel and Aluminium

FOR TRAINING PURPOSES ONLY!

© Lufthansa Technical Training

Filiform Corrosion

Filiform corrosion is a special form of crevice corrosion which occurs on metal surfaces having an organic coating system.

It is identified by its characteristic worm–like trace of corrosion products beneath the paint film. Filiform occurs when the relative humidity of the air is 78-90% and the surface is slightly acid.

If filiform corrosion is not removed, the corrosion can lead to intergranular corrosion, especially around fasteners and at seams. Filiform corrosion can be removed by using Al-oxide-blasting or by grinding.

Causes for Filiform Corrosion

This particular type of corrosion evidences itself in the form of fine molelike trenches under the paint that spread out from the Fastener, Butt Joint or Coating Break in Filiform or threadlike manner.

Most instances of filiform corrosion involve mild surface corrosion with no structural damage. Since it presents an undesirable appearance, steps must be taken to prevent further development.

The proper treatment involves removal of paint blisters and inspection of the area with a magnifying glass to determine extent of corrosion. All corrosive products must be removed and the area must be resealed with protective coatings.

If corrosion exists under a fastener head, the affected fastener must be removed, the area cleaned and a new fastener must be installed after application of alodine and corrosion inhibitive primer.

FOR TRAINING PURPOSES ONLY!

© Lufthansa Technical Training

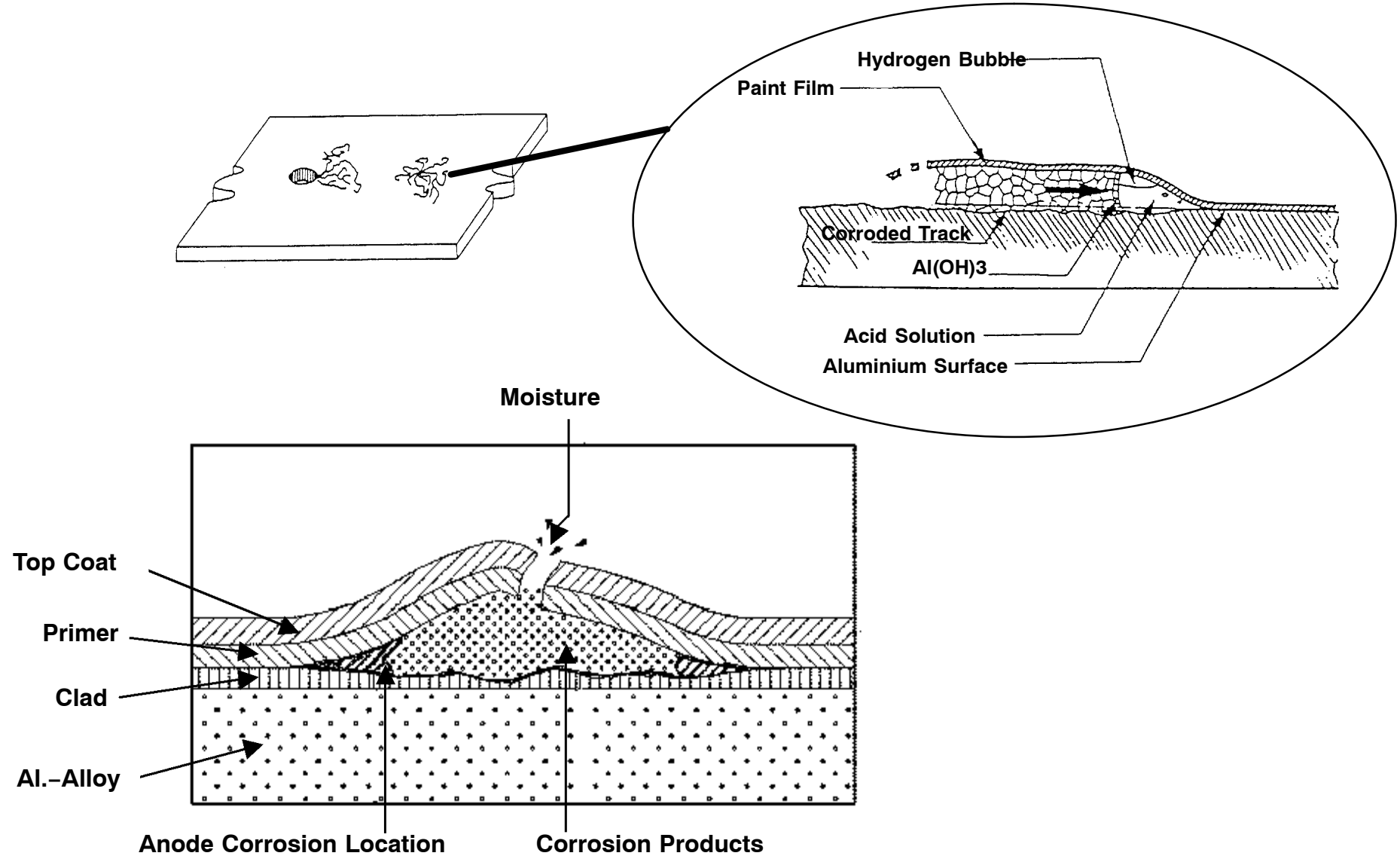

Figure 102 Filiform Corrosion

FOR TRAINING PURPOSES ONLY!

© Lufthansa Technical Training

Stress Corrosion

Stress corrosion is an intergranular cracking of the metal which is caused by a combination of stress and corrosion.

Stress may be caused by internal or external loading. Internal stresses are produced by non-uniform deformation during cold working, by unequal cooling from high temperatures and by internal structural rearrangement involving volume changes.

Internal stresses are induced when a piece of structure is deformed during an assembly operation (e.g. during pressing in bushings, shrinking a part for press-fit, installing interference bolts, installing rivets, etc).

Concealed stress is more important than design stress corrosion as it is difficult to identify before it has overcome the design safety factor. The level of stress varies from point to point within the metal.

Stresses near the yield strength are generally necessary to promote stress corrosion cracking.

Environments

Specific environments have been identified which cause stress corrosion cracking of certain alloys.

- Salt solutions and sea-water may cause stress corrosion cracking of high strength heat-treated steel and aluminium alloys. Methyl alcohol-hydrochloric acid solutions will cause stress corrosion cracking of some titanium alloys.
- Magnesium alloys may stress-corrode in moist air. Stress corrosion may be reduced by applying protective coatings, stress relief heat treatment, using corrosion inhibitors or controlling the environment.
- Shot-peening a metal surface increases resistance to stress corrosion cracking by creating compressive stresses on the surface which should be overcome by applied tensile stress before the surface sees any tension load.

FOR TRAINING PURPOSES ONLY!

© Lufthansa Technical Training

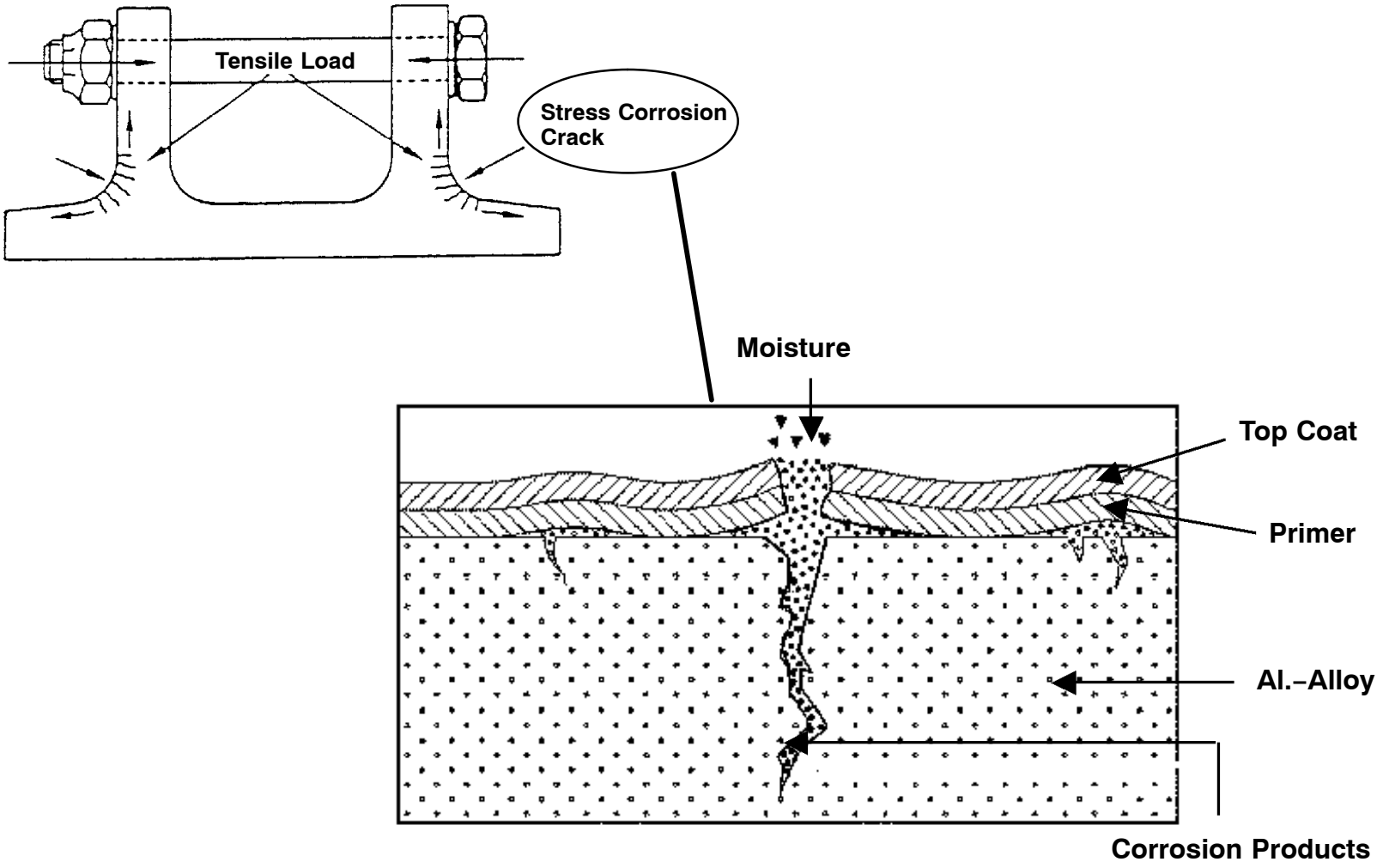

Figure 103 Stress Corrosion

FOR TRAINING PURPOSES ONLY!

© Lufthansa Technical Training

Electrochemical Corrosion

In the figure opposite we have a piece of aluminium alloy (such as alloy 2024, of which most aircraft structure is made). In this material, copper is alloyed with aluminium and the microscopic grains of the copper and the aluminium serve as the cathode and the anode for our explanation.

Aluminium is more negative than copper and will act as the anode in the galvanic action that takes place. Within the metal itself, the forces are such that there will be no flow of electrons between the two alloying agents until an external path is provided to form a complete circuit. This path is provided by the electrolyte, which may be a surface film of moisture containing such pollutants as acids, salts or other industrial contaminations.

In our illustration we will stick with a little hydrochloric acid in the atmosphere.

The electrode potential difference between the aluminium and the copper grains causes positive ions to exist within the aluminium.

When the electrolyte film covers the surface, the aluminium ions attract chlorine ions from the hydrochloric acid and form aluminium chloride, the corrosive salt. Hydrogen ions will be attracted to the copper by the electrons from the aluminium. These hydrogen ions will become neutralized and form molecules (H_2) which leave the surface as a free gas.

Corrosion has formed on the anodic aluminium but no corrosion products are evident on the copper, the cathode.

This type of electrochemical attack produces pits filled with the corrosive salts, and is usually rather localized. However, if the entire surface is covered with a strong electrolyte, there will be so much more corrosion that it will produce a more-or-less uniformly-damaged area. This type of corrosion is called a direct chemical attack.

FOR TRAINING PURPOSES ONLY!

© Lufthansa Technical Training

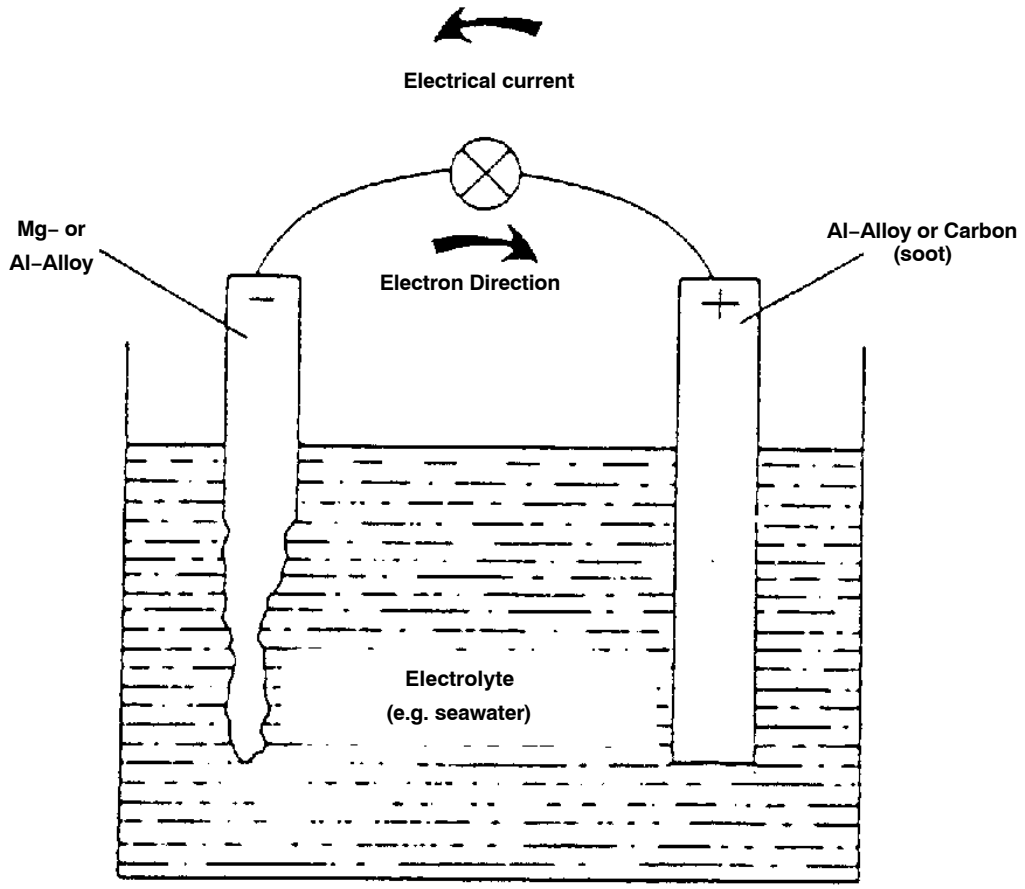

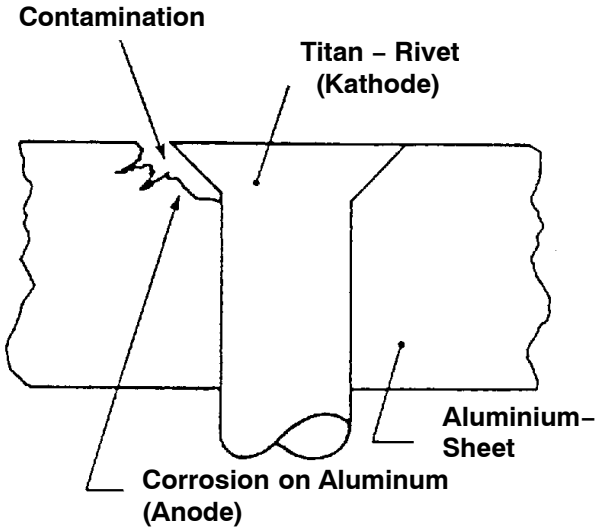

Figure 104 Electrochemical Corrosion

FOR TRAINING PURPOSES ONLY!

© Lufthansa Technical Training

Electrochemical Series for Metal

One of the basic characteristics of metals is their electrode potential. This simply means that when two dissimilar metals are placed in an electrolyte, there will exist between these two metals an electrical potential or voltage. This force will cause the electrons in the more negative material to flow to the less negative material - the cathode - if a conductive path is provided.

ARRANGED IN ORDER OF ELECTRODE POTENTIAL (NOBILITY)

(MOST ANODIC – WILL GIVE UP ELECTRONS MOST EASILY)

- MAGNESIUM
- ZINC
- CLAD 7075 ALUMINIUM ALLOY
- COMMERCIALLY PURE ALUMINIUM (1100)
- CLAD 2024 ALUMINIUM ALLOY
- CADMIUM
- 7075–T6 ALUMINIUM ALLOY
- 2024–T3 ALUMINIUM ALLOY
- MILD STEEL
- LEAD
- TIN
- COPPER
- STAINLESS STEEL
- SILVER
- NICKEL
- CHROMIUM
- GOLD

(MOST CATHODIC – LEAST CORROSIVE)

NOTE: ANY METAL APPEARING BEFORE ANOTHER IN THIS SERIES IS ANODIC TO ANY METAL WHICH FOLLOWS IT, AND WILL BE THE ONE CORRODED WHEN THEY ARE SUBJECT TO GALVANIC ACTION.

FOR TRAINING PURPOSES ONLY!

© Lufthansa Technical Training

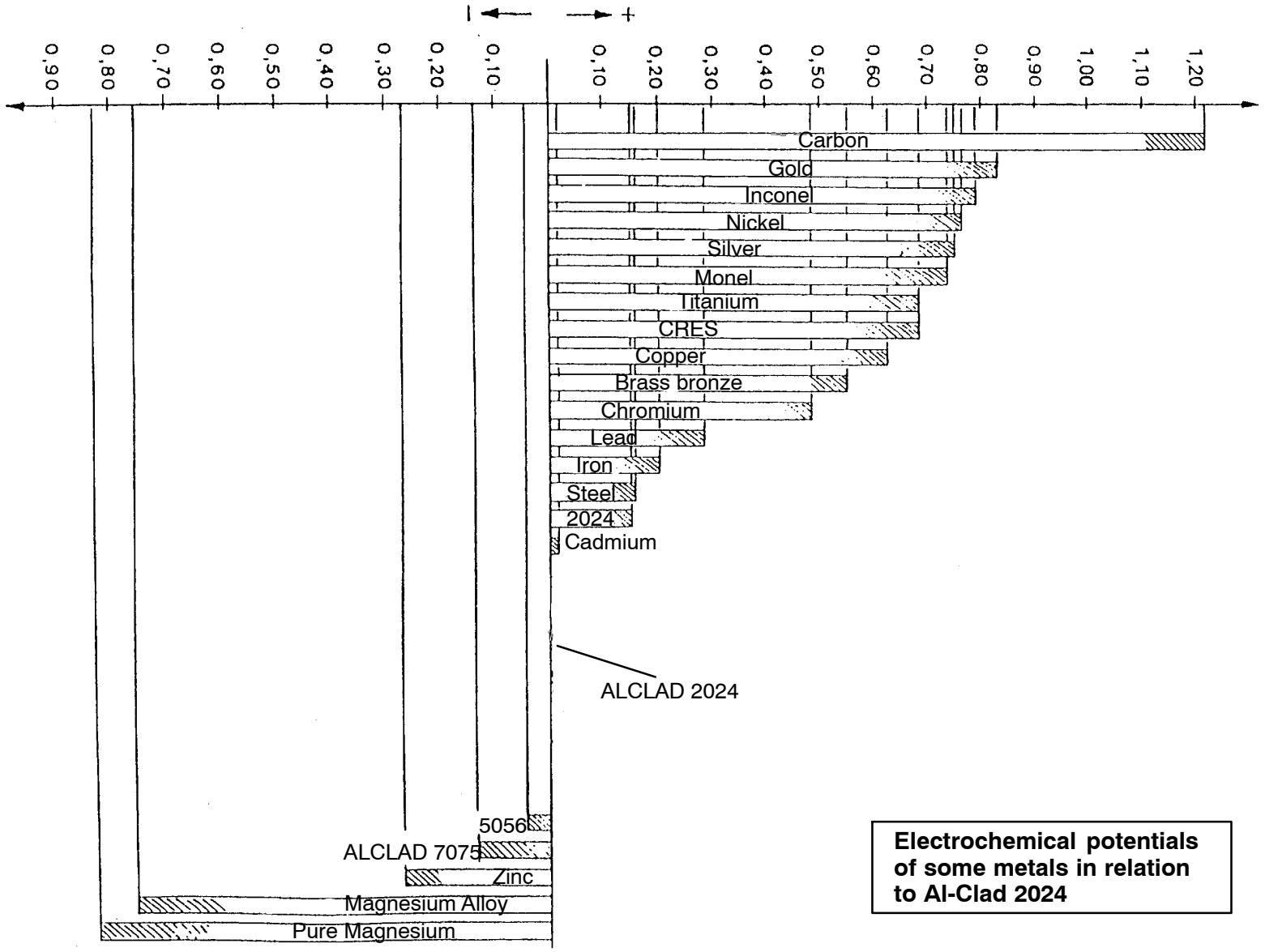

Figure 105 Electrochemical Series

FOR TRAINING PURPOSES ONLY!

© Lufthansa Technical Training

Galvanic Corrosion

General

Galvanic corrosion occurs when two dissimilar metals make electrical contact in the presence of an electrolyte. Metals of one group corrode when they are held in contact with those in another group. The further apart the groups, the more active the corrosion.

Causes for galvanic corrosion

For example, aluminium would corrode very quickly when coupled with carbon in a humid atmosphere, but aluminium would corrode very slowly in contact with cadmium.

The rate of galvanic corrosion also depends on the size of the parts in contact. If the surface area of the corroding metal (the anode) is smaller than the surface area of the less active metal (the cathode), corrosion will be rapid and severe.

When the corroding metal is larger than the less-active metal, corrosion will be slow and superficial. For example, an aluminium fastener in contact with a relatively inert monel structure may corrode severely, whilst a monel bracket secured to a large aluminium member would result in a relatively superficial attack on the aluminium sheet.

FOR TRAINING PURPOSES ONLY!

© Lufthansa Technical Training

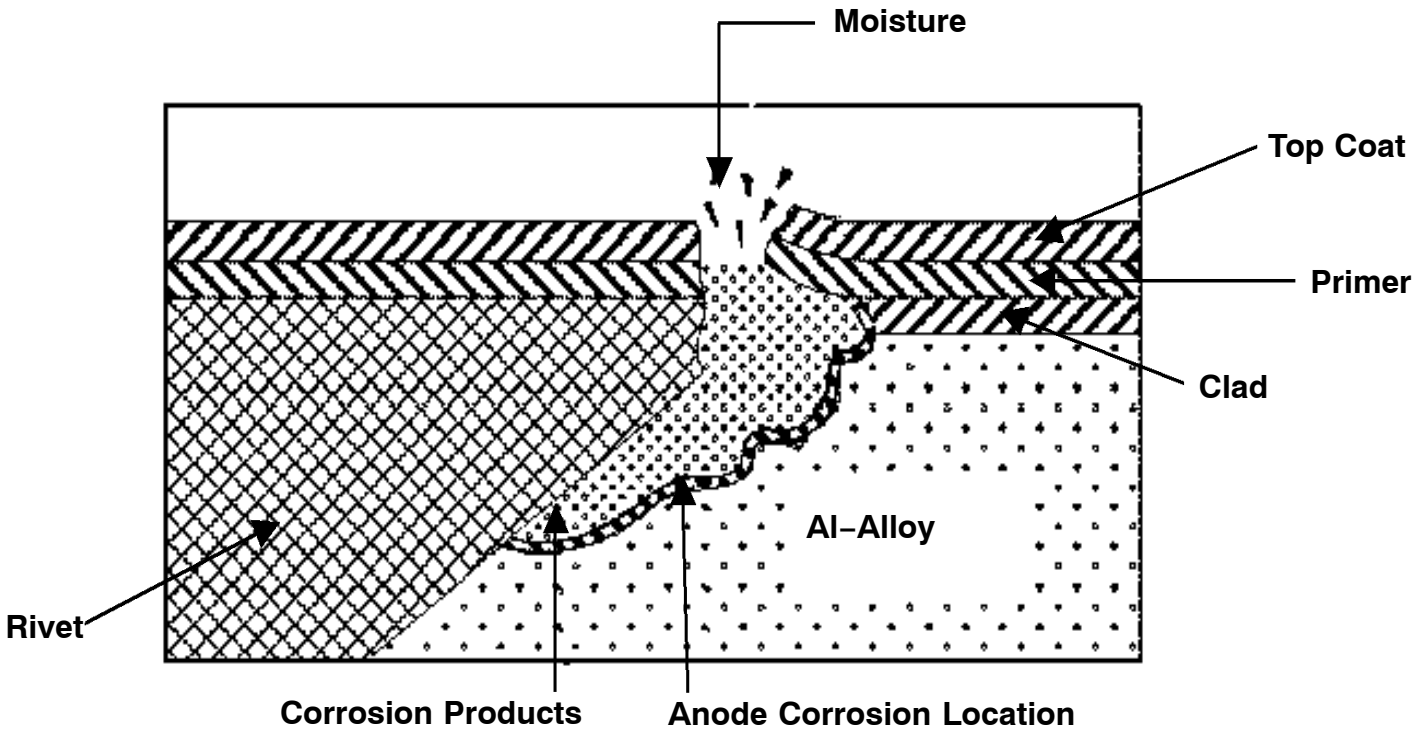

Figure 106 Galvanic Corrosion

FOR TRAINING PURPOSES ONLY!

© Lufthansa Technical Training

Pitting Corrosion

The most common type of corrosion on aluminium and magnesium is pitting. Pitting first appears as a white, powdery deposit. It starts on the surface of a material and then extends vertically into the material.

This type of corrosion is dangerous because of the vertical extension, which decrease the material strength. You do not get a large indication of this type of corrosion on the material surface.

This corrosion can be the starting point for intergranular corrosion. Contamination during the alloying process, swarf or electrolyte liquids can cause pitting.

FOR TRAINING PURPOSES ONLY!

© Lufthansa Technical Training

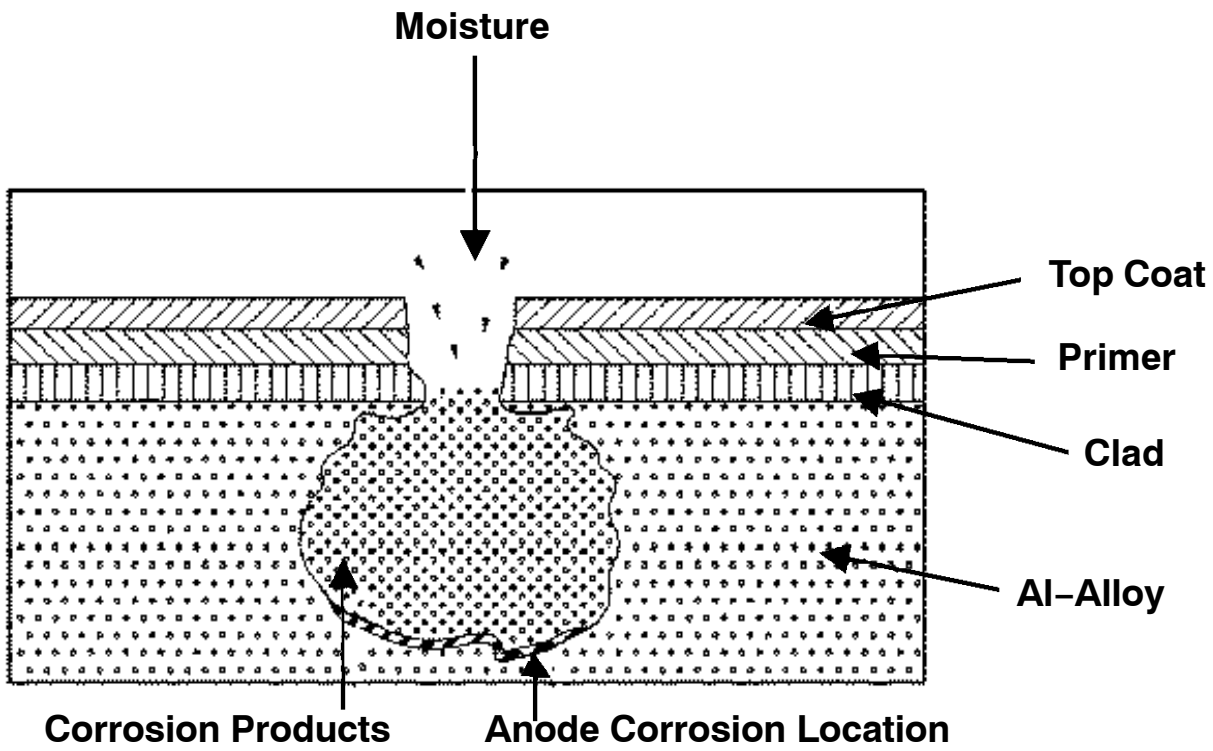

Figure 107 Pitting Corrosion

FOR TRAINING PURPOSES ONLY!

© Lufthansa Technical Training

Intergranular Corrosion

General

Intergranular corrosion is an attack on the grain boundaries of a metal.

Each of these tiny grains has a clearly defined boundary, which from a chemical point of view, differs from the metal within the grain center.

The grain boundary and grain center can react with each other as anode and cathode when in contact with an electrolyte or conductive medium.

Causes for Intergranular Corrosion

Intergranular Corrosion will appear in areas were the cladding is damaged due to scratches or other damages. Another point of interest might be a wrong heat-treatment procedure of the alloy.

This wrong manufacturing processes will produce small cavities between the boundaries. When the metal is subjected to changes in temperature an accumulation of condensed water will be the result and the corrosion will occur rapidly.

Intergranular corrosion may also result from change in the original heat-treatment condition caused by exposure to high temperature produced during grinding or machining during overhaul.

FOR TRAINING PURPOSES ONLY!

© Lufthansa Technical Training

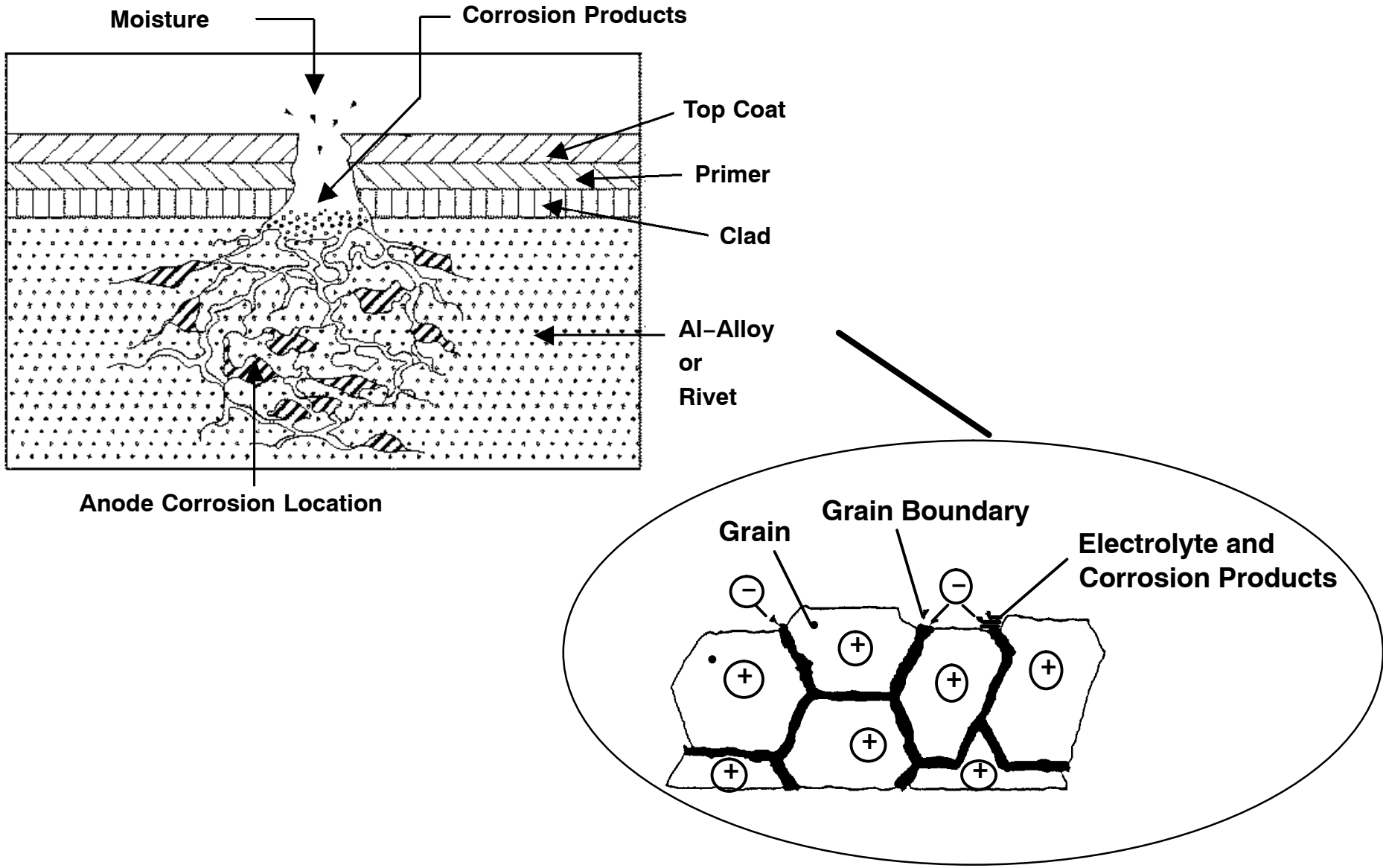

Figure 108 Intergranular Corrosion

FOR TRAINING PURPOSES ONLY!

© Lufthansa Technical Training

Exfoliation Corrosion

General

Exfoliation corrosion is an advanced form of intergranular corrosion which exhibits itselfs by lifting up the surface of a metal by the force of expanding corrosion products accumulating at the grain boundaries just below the surface.

Causes of Exfoliation Corrosion

Exfoliation Corrosion is mostly seen on extruded sections where the grain thickness is usually less than in rolled form, exfoliation also occurs in sheet stock.

The corrosion rate is usually accelerated by the presence of a dissimilar metal such as steel fastener and a corrosive electrolyte such as salt water.

FOR TRAINING PURPOSES ONLY!

© Lufthansa Technical Training

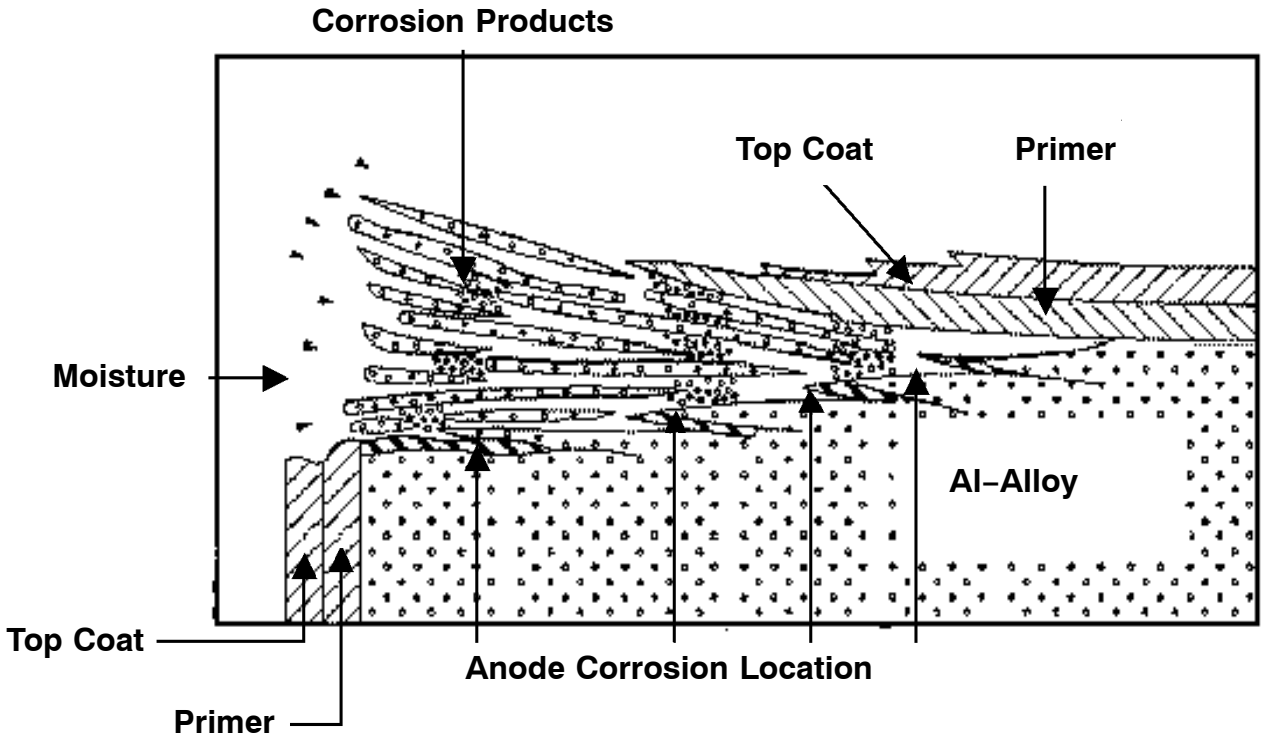

Figure 109 Exfoliation Corrosion

FOR TRAINING PURPOSES ONLY!

© Lufthansa Technical Training

Fretting Corrosion

General

Fretting corrosion is the result of rubbing contact between two heavily loaded surfaces, one of which must be metallic.

Causes of Fretting Corrosion

The rubbing movement, which may be very minute (in some cases elastic movement only), destroys any natural protective film and also removes particles of metal from the surface.

The removed particles form an abrasive which aggravates the effect of rubbing action, thus the surface is being continually removed to expose fresh metal to corrosive attack.

This form of corrosion can eventually cause cracking fatigue.

FOR TRAINING PURPOSES ONLY!

© Lufthansa Technical Training

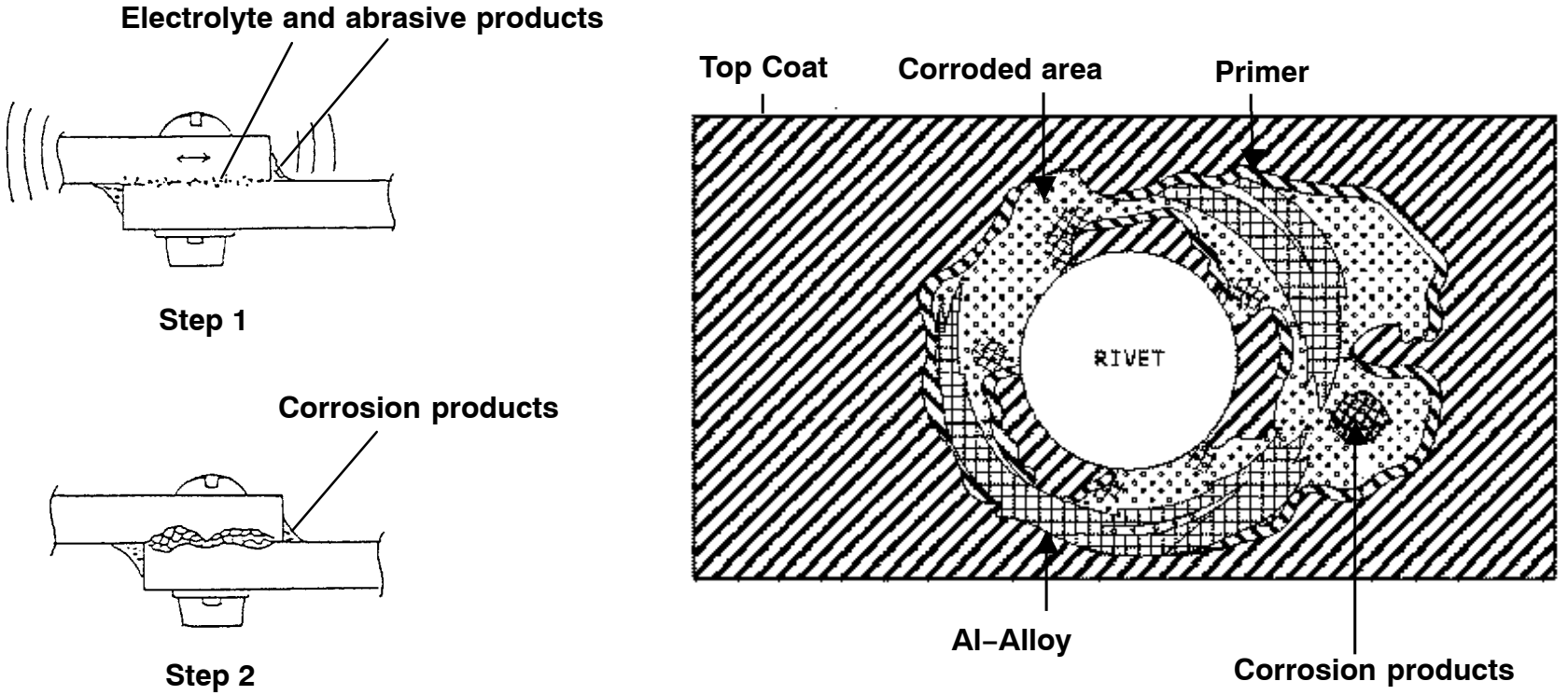

Figure 110 Fretting Corrosion

FOR TRAINING PURPOSES ONLY!

© Lufthansa Technical Training

Microbial Corrosion

General

Microbial corrosion in integral fuel tanks is caused by bacteria, fungi or yeast in unclean kerosene-type jet engine fuel.

Causes for Microbial Corrosion

Organisms commonly existing in the soil are carried by the air and ground water and may be found growing in the water layer that may exist in a fuel tank. A slimy mat of sludge-like deposit is formed, which may exclude oxygen and permit the existence of other organisms.

The corrosion mechanism is not fully understood yet, although several organisms are known to be capable of penetrating the top coating in a tank, permitting other bacteria and their metabolic products to attack the aluminium directly

Microbial formations can be prevented by providing for complete water drainage of tanks by periodic monitoring of the fuel distribution system and by filtering and dewatering fuel during final transfer.

If contamination of A/C fuel/fuel tank is detected during check, a biocide (kathon or biobor) treatment is necessary.

FOR TRAINING PURPOSES ONLY!

© Lufthansa Technical Training

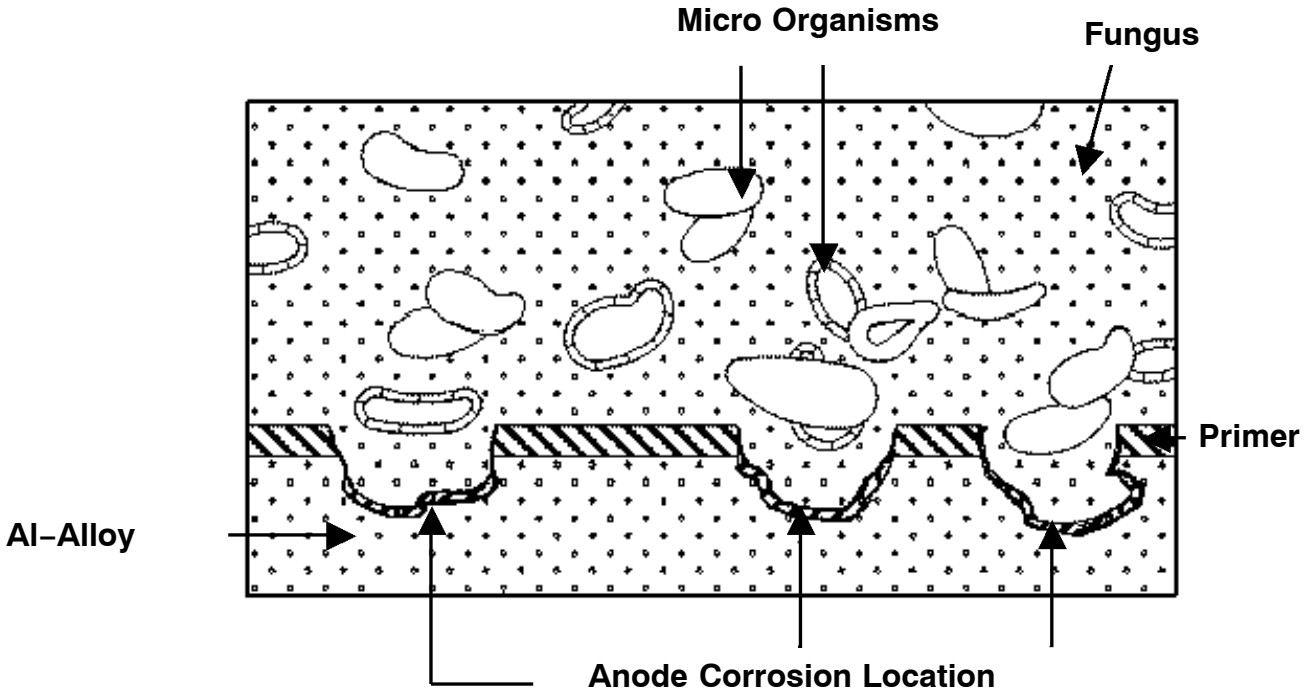

Figure 111 Microbial Corrosion

FOR TRAINING PURPOSES ONLY!

© Lufthansa Technical Training

Crevice Corrosion

General

Crevice corrosion occurs between two materials that come into contact. The metals may be similar or dissimilar or in some cases one of the parts may be nonmetallic.

Causes for Crevice Corrosion

The crevice provides an entrapment area for high concentrations of corrosive substances which aid the corrosive action. A potential difference can built up inside the crevice caused by a higher oxygen concentration (noble) in the external area than in the middle of the crevice.

Crevice corrosion can be prevented by completely sealing the faying surfaces from corrosive materials and using correct fastener-spacings.

FOR TRAINING PURPOSES ONLY!

© Lufthansa Technical Training

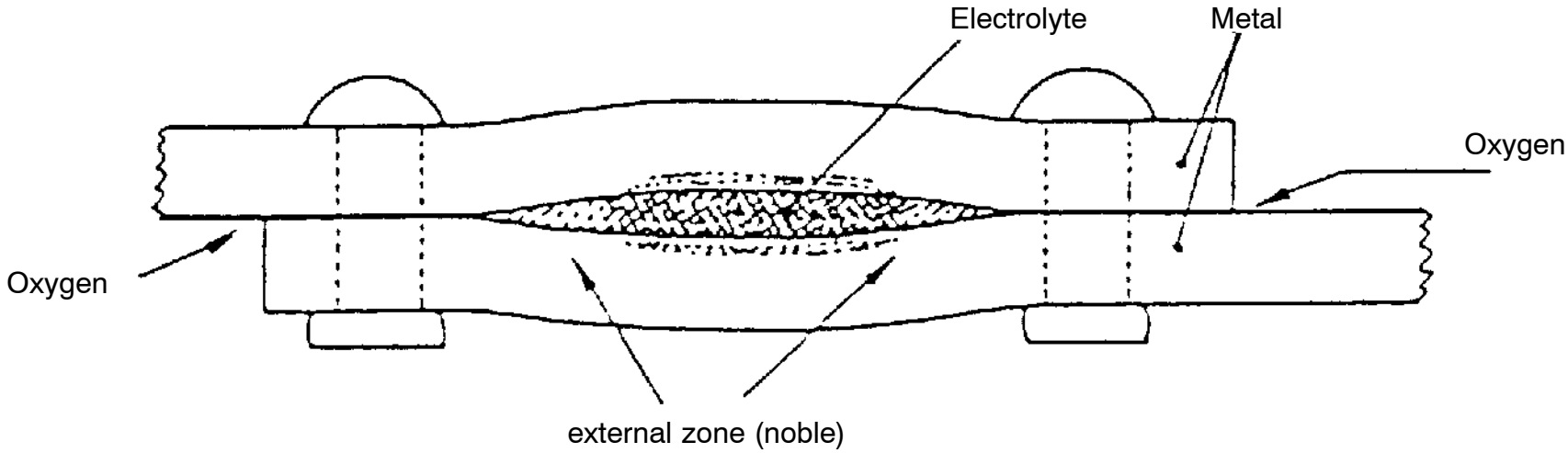

Figure 112 Crevice Corrosion

FOR TRAINING PURPOSES ONLY!

© Lufthansa Technical Training

M6.5 FASTENERS

INTRODUCTION

List of Common Abbreviations

ABS	Airbus Standard
AFRP	Aramide Fibre Reinforced Plastic
AN	Airforce Navy (USA)
AMM	Aircraft Maintenance Manual
BAC	Boeing Aircraft Corporation
CFRP	Carbon Fibre Reinforced Plastic
CRES	Corrosion Resistant Steel
FWD	Forward
DAN	Deutsche Airbus Norm
GFRP	Glass Fibre Reinforced Plastic
HL	Hi-Lok
in (IN)	Inch
KSI	Kilopound per Square Inch
L/H (LH)	Left Hand
m (M)	Meter
mm	Millimeter
MS	Military Standard (USA)
NAS	National Aerospace Standard (USA)
NSA	Normalisation Sud Aviation (French)
R/H (RH)	Right Hand
rpm (RPM)	Revolutions Per Minute
SRM	Structural Repair Manual
TL	Taper-Lok

List of Conversions

Inch to Millimeter conversion

1in = 25,4 mm

Fahrenheit to Celsius conversion

°C = (°F - 32) x 0,555

Celsius to Fahrenheit conversion

°F = °C x 1,8 + 32

FOR TRAINING PURPOSES ONLY!

© Lufthansa Technical Training

General

The installation of fasteners is one of the usual procedures used to attach components or assemblies to aircraft structures.

Aluminium solid rivets are mainly used. To attach high-strength components and assemblies only aluminium alloy rivets are used.

Steel, titanium or monel fasteners are used for joints in high-temperature areas and for applications in composite (CFRP) structures.

Differences are made between fastener types according to their application:

- Rivets (solid)
- Special Fasteners:
  - Threaded Pin Fastener (Hi-Lok, Hi-Lite, Bullnose)
  - Swaged Pin Fastener (Lockbolt)
  - Taper-Lok
  - Bolts
- Blind Fasteners:
  - Pull-Through Fastener (blind rivets)
  - Huck, Avdel
  - Cherrymax, Chobert
  - Blind Bolts

For each type, further difference is made with reference to type of manufactured head, for example:

- Universal
- Hexagonal
- 12 points
- countersink head.

Data in this section is based on applicable standards and specifications of related vendors.

FOR TRAINING PURPOSES ONLY!

© Lufthansa Technical Training

Special Fasteners

General

These fasteners have a close-tolerance shank or pin and a collar or nut which forms the closing tail.

NOTE: When using these fasteners in CFRP structure, special nuts or collars must be used. These will be specified in the applicable repair procedure.

Special fasteners are divided into two groups because of their different strengths:

- Fasteners for shear application
- Fasteners for tension application.

Threaded Pin Fasteners (Hi–Lok, Hi–Lite, Bullnose)

The threaded pin is a two–part fastener. These two parts are:

13.A pin with a head at one end and a thread at the other end, and

14.a threaded collar or nut with a hexagonal drive.

Pins are available with a protruding or countersunk head in the following materials:

- Pin made out of steel or titanium alloy.
- Collar or nut made out of aluminium alloy, corrosion–resistant steel or steel alloy.

Swaged Pin Fasteners (Lockbolt)

Swaged Pins are two–part fasteners. These two parts are:

1. A headed pin with locking grooves, a break–off groove and pull grooves,
2. a collar.

Pins are available for shear or tensile strength applications.

These fasteners are available with a protruding or countersunk head in the following materials:

- Pin made out of steel alloy, titanium or aluminium alloy
- collar made out of aluminium alloy.

Taper–Lok Fasteners

The Taper–Lok is a two–part fastener. These two parts are:

1. A tapered bolt with a threaded end,
2. a self–locking nut with an integral washer.

Taper–Lok fasteners are available with a protruding or countersunk head made out of titanium or steel alloy.

Bolts

The bolt is a two–part fastener consisting of:

1. a headed bolt with a threaded end and
2. a corresponding locking nut.

Bolts are available with the following head-types:

- Protruding
- Hexagonal
- 8 points
- 12 points or
- Countersunk.

They are available made out of the following materials:

- Bolt of corrosion–resistant steel, steel alloy or titanium.
- Nut of corrosion–resistant steel, steel alloy or titanium.

FOR TRAINING PURPOSES ONLY!

© Lufthansa Technical Training

THIS PAGE INTENTIONALLY LEFT BLANK

FOR TRAINING PURPOSES ONLY!

© Lufthansa Technical Training

M6.5.1 SCREW THREADS

SCREW NOMENCLATURE, THREAD TYPES, STANDARD THREADS, MEASURING SCREW THREADS

Thread Molding

Introduction

A screw thread is the ridge left when a groove is cut into a cylindrical or conical surface. If the groove is formed on the external surface, the ridge is called an external or male thread, whereas the thread formed inside a cylinder or cone is said to be an internal or female thread.

A thread formed on a cylinder is known as a straight or parallel thread, whilst that cut onto a conical part is called a taper thread. When cut in a clockwise direction the thread is said to be right hand; when cut in an anti–clockwise direction the thread is left hand. Most screws are right hand.

Features

Screw threads play an important part in all equipment maintenance and an appreciation of the principal terms and features associated with threads is essential when making screw threads and when using threaded parts.

- **Form**. The form of a screw thread is the shape of one complete contour of the thread between corresponding points on the thread crest.
- **Crest**. This is the prominent point of the thread; whether an external or internal thread, it is the top of the thread.
- **Root**. The root is the bottom point of the thread groove, whether the thread is external or internal (male or female).
- **Flank**. The flank is the slope of the thread between root and crest.
- **Thread Angle**. This is the angle between two adjacent flanks.
- **Major Diameter**. The major diameter of a parallel screw thread is the diameter of the crest for male threads and the root diameter for female threads.
- **Minor Diameter**. This is the root diameter of a male thread and the crest diameter of an internal or female thread.
- **Depth**. This is the radial distance between root and crest.
- **Pitch**. The pitch of a screw thread is the distance between corresponding points on adjacent thread forms in the same axial plane.
- **Lead**. The lead of a screw thread is the distance that the moving member of a mating pair advances axially when turned one complete revolution. The lead of a single start thread is the same as the pitch.

Single and Multiple Threads

When formed by one continuous groove, a thread is said to be single or single start. The majority of threads used for adjustment and fastening are single start, and the lead is equal to the pitch (P) of the thread.

Multiple start threads consist of two or more ridges left by grooves cut side by side. In this way the axial travel or lead of the thread is increased without changing the pitch. For example, a nut engaged with a double–start thread will travel twice as far in one complete turn as one engaged with a single start thread of the same pitch.

In multiple start threads, the lead is equal to the pitch of the thread multiplied by the number of starts.

FOR TRAINING PURPOSES ONLY!

© Lufthansa Technical Training

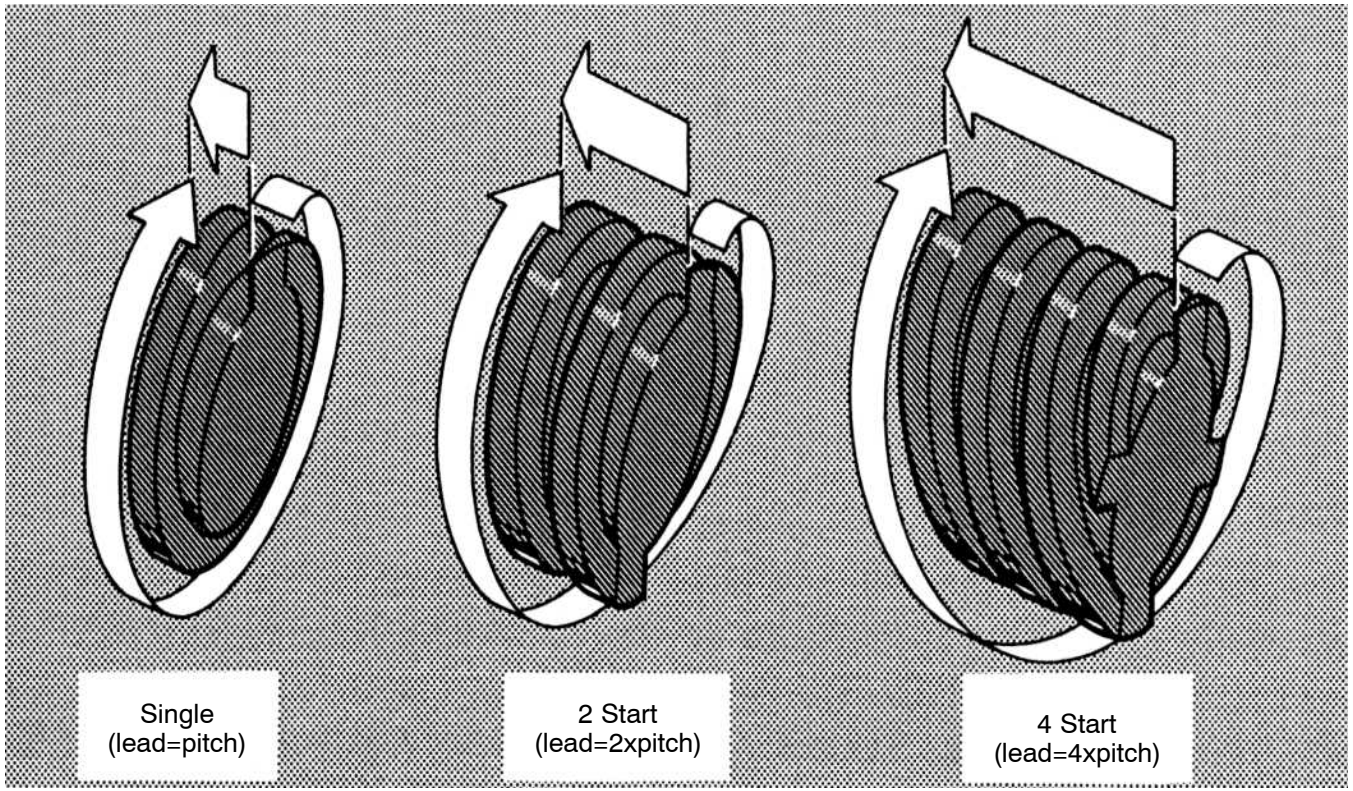

Figure 113 Single- and Multiple-Start Threads

FOR TRAINING PURPOSES ONLY!

© Lufthansa Technical Training

THIS PAGE INTENTIONALLY LEFT BLANK

FOR TRAINING PURPOSES ONLY!

© Lufthansa Technical Training

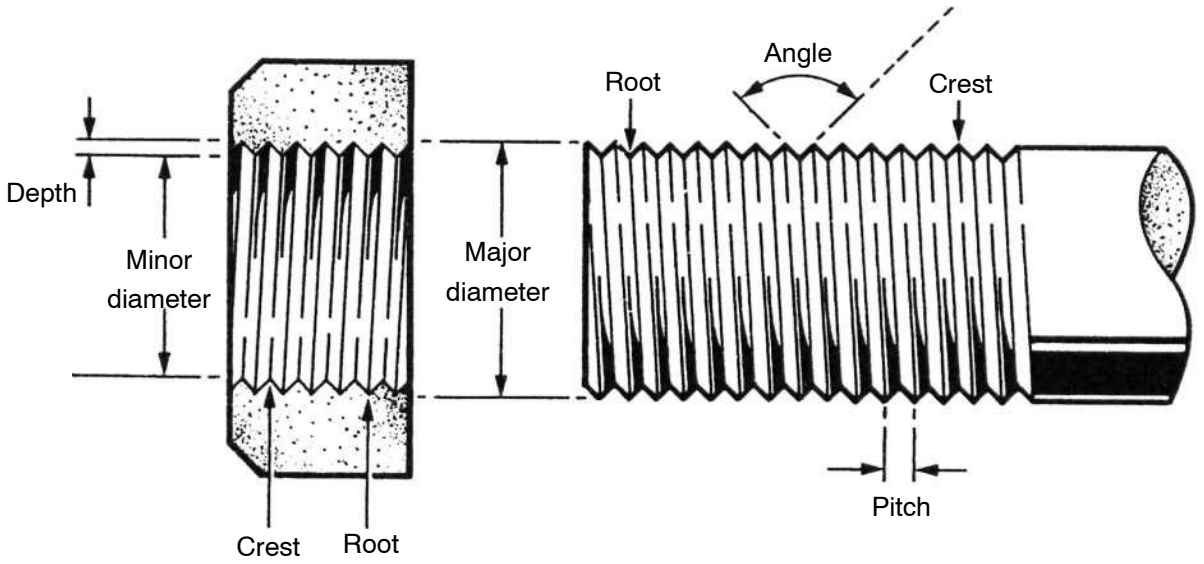

Internal (female) thread

External (male) thread

Figure 114 Denomination of Thread Parts

FOR TRAINING PURPOSES ONLY!

© Lufthansa Technical Training

Thread Standards

Screw–threaded parts have become essential in machine assembly and are used universally as fastening devices.

Originally, all screw parts producing companies had their own thread forms, which caused a non-interchangeability of screw parts.

Obviously, some sort of standardization was needed, even though it was accepted that a single screw thread, with a fixed pitch for a given diameter, would not be satisfactory in all circumstances. A further objection to a single screw form arose from the use of British, American and metric systems of measurement.

Thread Standards

For many years the principal British systems have been British Standard (BS) and British Association (BA), whilst in Canada and the United States the American National (AN) has been the main screw thread used.

The individual national threads have now been largely replaced by a common screw thread designed to simplify the interchange of threaded parts; this is the **Unified** thread.

A metric version of the Unified thread is being developed by the International Organization for Standardization (ISO).

British Standard Thread Forms

There are three British Standard thread forms in general use: British Standard Whitworth (BSW), British Standard Fine (BSF), and British Standard Pipe (BSP).

- **BSW**. This is the British Standard coarse thread which is recommended for all general purpose work in a wide range of metals and plastics. The large Whitworth thread form makes it particularly suitable for dismantling and assembly of parts. It has a symmetrical thread with an angle of 55° and is rounded equally at the root and crest.
- **BSF**. This is basically a finer version of the Whitworth thread form. The smaller thread provides a finer form of adjustment and greater resistance to vibration in all fastening devices. For a given diameter, a BSF screw will always have more turns per inch (TPI) than a BSW screw and, because of its resistance to vibration, it has been much used on British aircraft, mechanical transport and mobile equipment.
- **BSP**. This is another fine–pitch adaptation of the Whitworth thread form. It is used for pipeline couplings where the fine pitch ensures that sufficient uncut metal remains on the wall of a pipe to guarantee a strong connection. The thread may be tapered to assist in making a pressure–tight joint. The taper is based upon the internal diameter of the pipe.
- **BA** (British Association). This fine–pitch thread is used for sizes below 1/4in diameter only; it is widely used for smaller mechanical and electrical parts in aircraft and mechanical transport.

  Unlike other standard threads, BA sizes are expressed numerically. The popular size range is from 0 to 10; the larger the number, the smaller is the thread.

  The BA differs from BSW and BSF in having a thread angle of 47.5^{o}, although the feature of equal rounding for root and crest is retained. The largest size (0 BA) has a major diameter of 0.236 in. The BA thread is metric.
- **ANC** and **ANF** (American National Coarse and Fine). These two American standard threads approximate to the BSW and BSF threads respectively. They perform a similar function in American engineering and may be encountered in machines of American origin.

  The thread form is quite different from the British thread and in some ways is more like a metric thread. The flattening of the crest and root in the ANC is not equal; modern manufacturing methods also produce thread crests which are, to some extent, rounded rather than flat.
- **Unified**. The basic thread form of the unified series incorporates features from both American and British national threads. Although the American and British specifications for the unified thread differ slightly, the differences do not cause a lack of interchangeability of threaded parts. The series has three versions of the basic thread form which are designed to cover all engineering requirements; these are:
  - UNC – Coarse thread
  - UNF – Fine thread
  - UNEF – Extra fine thread.

  Components having unified threads are identified by a symbol or machine marking; the markings vary with the part and method of manufacture.

FOR TRAINING PURPOSES ONLY!

© Lufthansa Technical Training

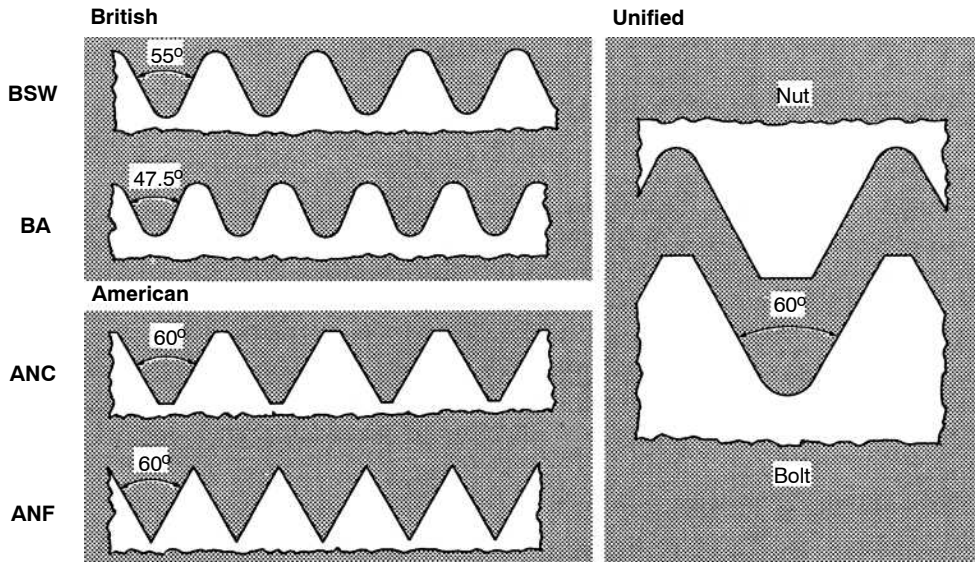

Standard Thread Systems

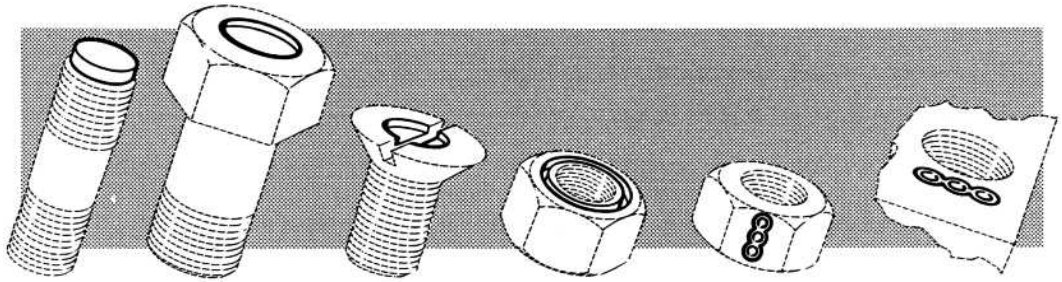

Examples of Unified Marking

Figure 115 Threads

FOR TRAINING PURPOSES ONLY!

© Lufthansa Technical Training

Determination of Unified threads

In the Unifed system the thread diameters are given up to a diameter of 1/4 inch as a key number and over 1/4 inch as a fraction in the first place of the determination.

A second number indicates the number of pitches in one inch of the axial thread length.

Example 10 - 32:

The 10 is the thread key number and represents a diameter of 3/16 inch.

The 32 represents the number of thread pitches per axial thread length.

Example 1/4 - 28:

The 1/4is the diameter in inch.

The 28, represents the number of thread pitches in one inch axial thread length.

FOR TRAINING PURPOSES ONLY!

© Lufthansa Technical Training

THREAD TYPE		DIAMETER	
UNF - Series	UNC - Series	in Inch	in mm
- 0 80	———	0600	1.524
- 1 72	- 1 64	.0730	1.854
- 2 64	- 2 56	.0860	2.184
- 3 56	- 3 48	.0990	2.514
- 4 48	- 4 40	.1120	2.844
- 5 44	- 5 40	.1250	3.175
- 6 40	- 6 32	.1380	3.505
- 8 36	- 8 32	.1640	4.165
- 10 32	- 10 24	.1900	4.826
- 12 28	- 12 24	.2160	5.486
- 1/4” 28	- 1/4” 20	.2500	6.350
- 5/16 24	- 5/16” 18	.3125	7.937
- 3/8” 24	- 3/8” 16	.3750	9.525
- 7/16” 20	- 7/16” 14	.4375	11.112
- 1/2” 20	- 1/2” 13	.5000	12.700
- 9/16” 18	- 9/16” 12	.5625	14.287
- 5/8” 18	- 5/8” 11	.6250	15.875
- 3/4” 16	- 3/4” 10	.7500	19.050
- 7/8” 14	- 7/8” 9	.8750	22.225
- 1” 14	- 1” 8	1.0000	25.400

FOR TRAINING PURPOSES ONLY!

© Lufthansa Technical Training

Thread Pitch

Coarse and Fine Pitch

Two screw threads may have similar major diameters and thread forms, yet have different depths of thread. The screw which has a deeper thread cut into its surface will have fewer threads per inch (of its axial length) and is said to have a coarser pitch than the shallow thread. A coarse pitch thread has a greater lead than a fine pitch thread of the same major diameter.

In a coarse pitch pair (eg nut and bolt), the axial movement for each revolution is greater than that produced by a fine pitch pair of the same major diameter.

The increased axial movement is obtained at the expense of the minor diameter of the male screw which is smaller in the coarse pitch pair and, therefore, weaker than its fine–pitch counterpart.

In general, a fine–pitch screw has a stronger root portion, tighter grip, finer adjustment and is more resistant to shaking loose when subjected to vibration than a coarse–pitch screw of a similar major diameter.

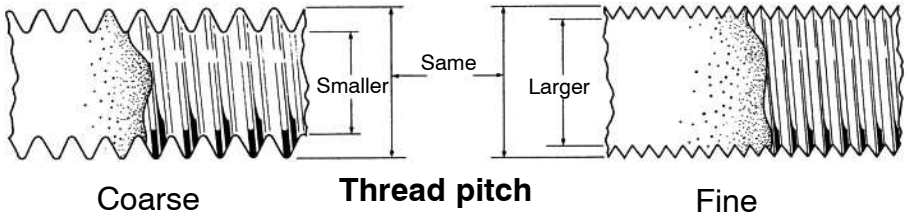

Screw Pitch Gauges

Screw pitch gauges are used to determine the pitch of a thread quickly and exactly.

- Select a screw pitch gauge of the correct thread form.
- Keep the leaf parallel to the thread axis.
- Check that the gauge leaf fits the thread accurately.
- Read the required pitch directly from the leaf that accurately matches the thread.

Thread Profile

The shape (or profile) of a screw thread depends mainly upon the function of the screw.

The symmetrical 'Vee' thread is the most common thread form and is a shape designed to combine strength with ease of engagement. The angle of the 'Vee', and minor characteristics of the thread form, vary according to the system to which the thread belongs.

The Square, Buttress and Acme threads, which are primarily transmission threads, are widely used in lifting tackle, screw–jacks and parts of heavy industrial machinery.

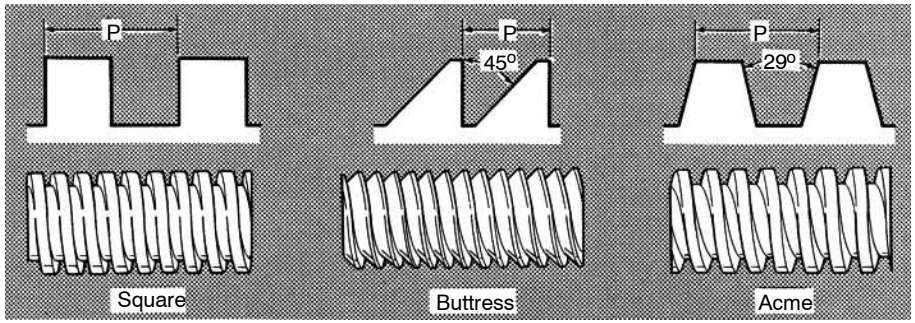

Transmission Threads

FOR TRAINING PURPOSES ONLY!

© Lufthansa Technical Training

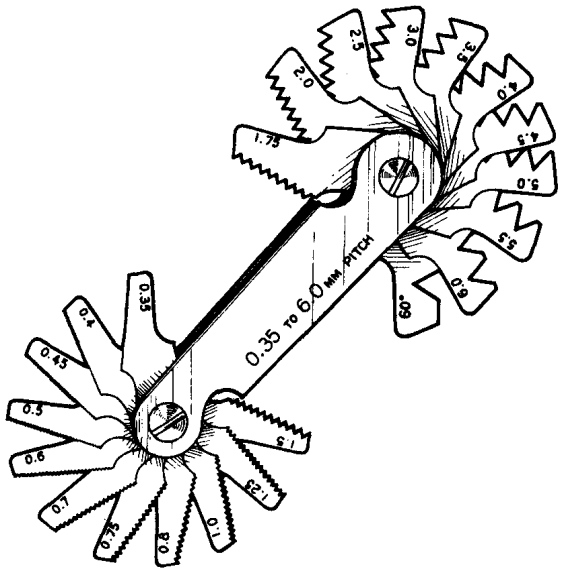

Screw Pitch Gauge

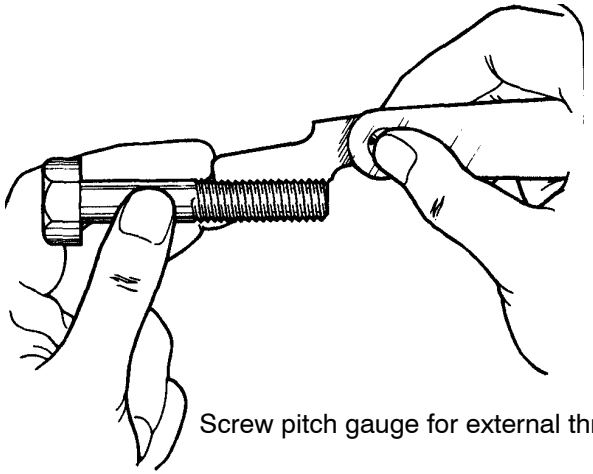

Screw pitch gauge for external threads

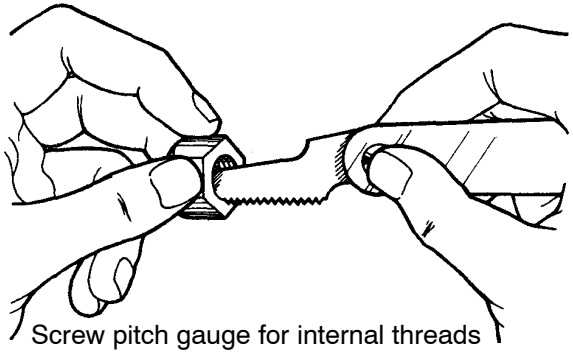

Screw pitch gauge for internal threads

Figure 116 Screw Pitch Gauge

FOR TRAINING PURPOSES ONLY!

© Lufthansa Technical Training

M6.5.2 BOLTS, STUDS AND SCREWS

SPECIFICATION, IDENTIFICATION AND MARKING OF BOLTS AND NUTS

Bolts, Screws and Tension Screws

Introduction

Power and/or hand tools may be used to install and remove bolts, screws and nuts. If a specific type of tool is required it will be given in the particular topic where relevant.

Install bolts and screws, where practical, with the head either uppermost or foremost. In this position there is less risk of the bolt/screw falling out if it becomes loose.

If not specified in a repair procedure, or by the original position of the fastener, install nuts so that not less than1/32 in (0.8 mm) of the bolt or screw extends through the nut. If the bolts or screws are chamfered, the full chamfer must extend through the nut.

The torque values for fasteners are given in SRM Chapter 51.

FOR TRAINING PURPOSES ONLY!

© Lufthansa Technical Training

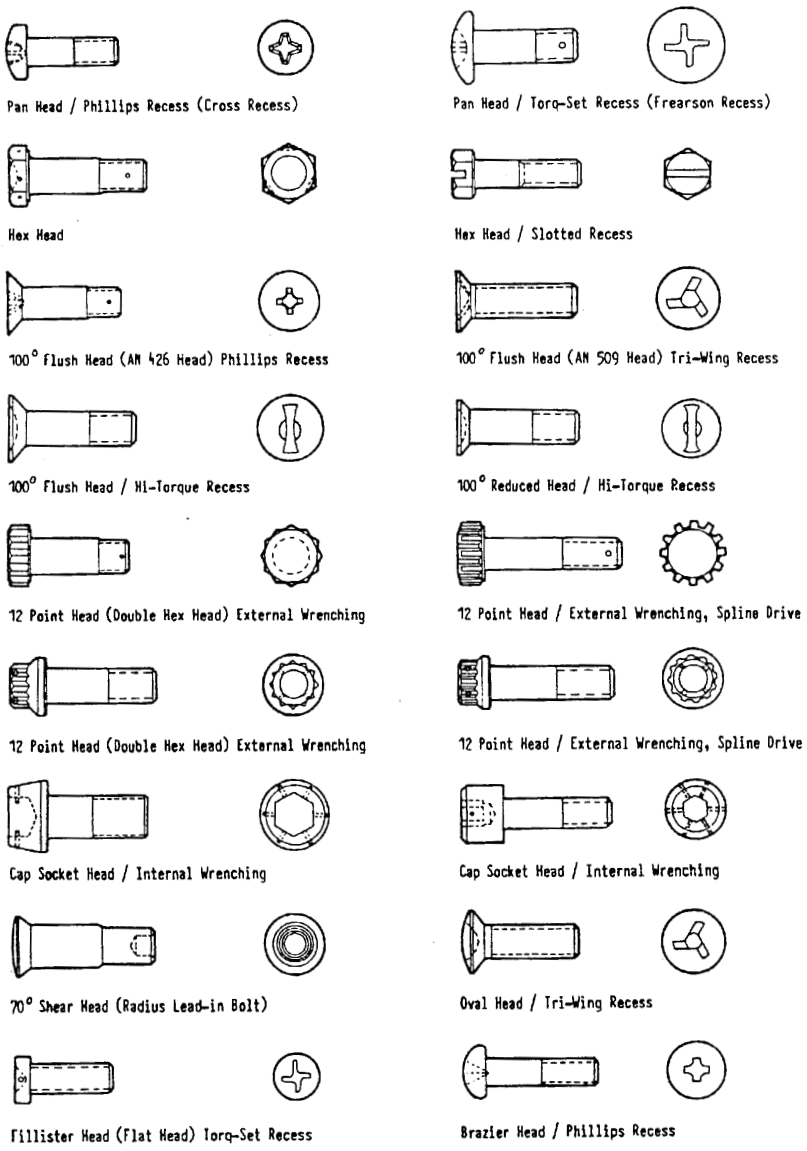

Tensile (ksi)	Shear	Style and Part Number	Description	Material	Companion Locknut	Temperature Application To
160	96	MS 20004 thru MS 20024	Internal Wrenching	Alloy Steel	42FW 42FLW	450°F
160	96	MS 21262	Self-Locking, Cap	Alloy Steel	—	250°F
160	96	MS 24675 thru MS 24678	Drilled Head, Cap	Alloy Steel	32FL	450°F
160	—	NAS 563 thru NAS 572	Hex, Full Thread	Alloy Steel	42FW 42FLW	450°F
160	96	NAS 1223 thru NAS 1235	Hex Head, Self Locking	Alloy Steel	—	250°F
160	95	NAS 1266 thru NAS 1270	Hex Head	6Al-4V Titanium	48FLW FN T20	500°F
300	180	EWB 30	12-Point	Alloy Steel	FN 30	450°F
300	180	EWB 930	12-Point	Alloy Steel	FN 930	900°F
260	156	EWB 26	12-Point	Alloy Steel	FN 26 FNF 26	450°F
260	156	EWB 926	12-Point	Alloy Steel	FN 926	900°F
220	132	EWB 22	12-Point	Alloy Steel	EWN 22 FNF 22 FNH 22	450°F
220	132	LWB 22	12-Point	Alloy Steel	FN 22	450°F
220	132	EWB TM9	12-Point	Alloy Steel	EWN TM9	900°F
220	132	LWB 922	12-Point	Alloy Steel	FN 922	900°F

Figure 117 Types of Fastener Heads and Recesses

FOR TRAINING PURPOSES ONLY!

© Lufthansa Technical Training

Identification

Aircraft bolts can be identified by the code marking on the bolt head.

The markings according to US standards denote the bolt manufacturer, the material from which the bolt is made and whether the bolt is a standard type or a special purpose bolt.

FOR TRAINING PURPOSES ONLY!

© Lufthansa Technical Training

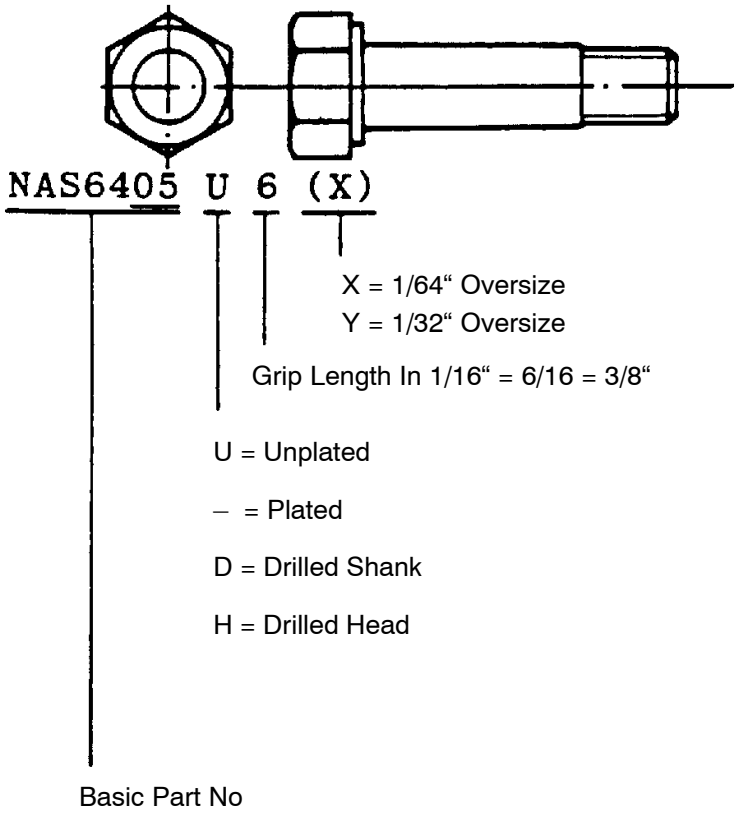

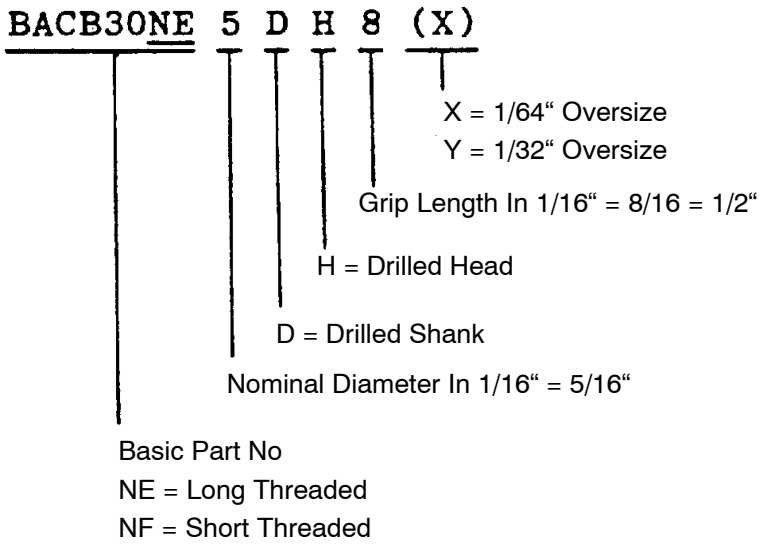

Example

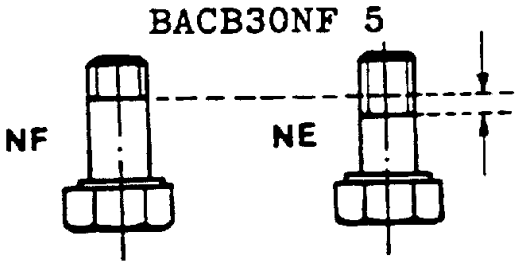

Figure 118 Screw Identification

FOR TRAINING PURPOSES ONLY!

© Lufthansa Technical Training

Installation of Bolts

In materials with a thickness greater than 2.4mm it is acceptable to have 2 pitches of screw-thread contained within the hole.

If the material thickness is less than 2.4mm then no threads may be contained within the hole.

A maximum of three washers may be used to adjust grip length. (one under the head, to protect the structure from damages caused by rotations of the head and maximal two under the nut to adjust the length).

FOR TRAINING PURPOSES ONLY!

© Lufthansa Technical Training

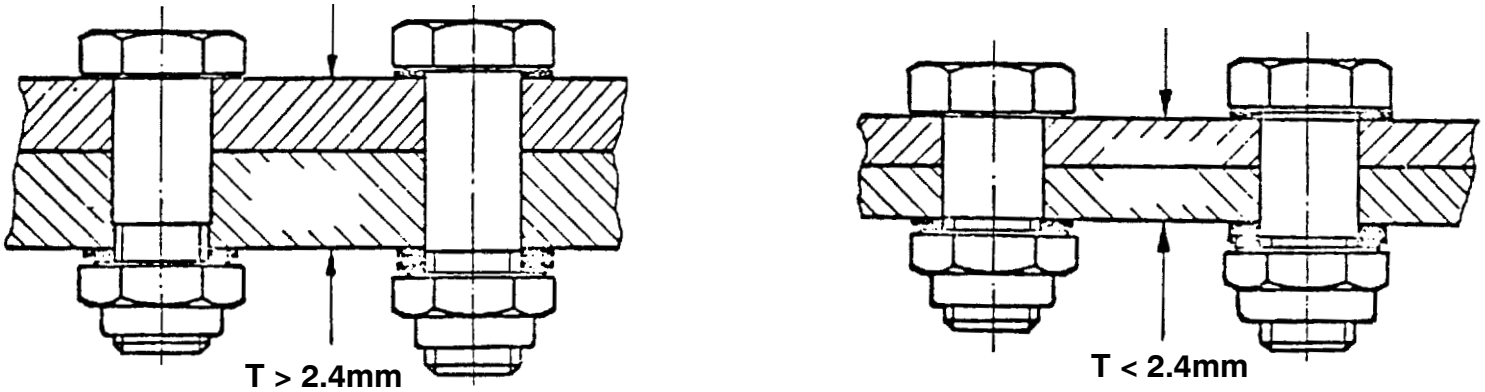

Figure 119 Installation of Bolts

FOR TRAINING PURPOSES ONLY!

© Lufthansa Technical Training

Studs

Introduction

A stud is a piece of rod, threaded at each end with a plain portion in the middle.

Unlike a bolt, a stud has no head. Therefore, its fitting (and removal) requires special tools or techniques.

Fitting

Various methods are employed to fit studs. Amongst these methods are:

- Stud Box,
- Stud insertion tool, and
- Lock Nuts.

Stud Box

This is simply a piece of hexagonal metal bar, drilled and tapped through its axial centre-line.

3. The stud is screwed into one end and a standard set screw into the other.
4. The end of the screw is brought firmly into contact with the end of the stud to lock the items into one unit.
5. The stud can now be screwed tightly into its housing by using a spanner on the hexagon.

Once fitted, the stud box is removed by undoing the locking set screw to free the box, which can then be unscrewed from the stud.

Stud Insertion/Removal Tool

The stud is started into its thread by hand and then the inserting tool is placed over the protruding end until the plain shank of the stud enters the tool. A locating screw on the outer end of the tool is adjusted to position the tool correctly. The stud and tool can now turn together.

Lock Nuts

Two nuts are screwed onto the outer thread of the stud and locked firmly together by using two spanners. The stud is then screwed firmly into its housing by using a single spanner on the outer nut.

FOR TRAINING PURPOSES ONLY!

© Lufthansa Technical Training

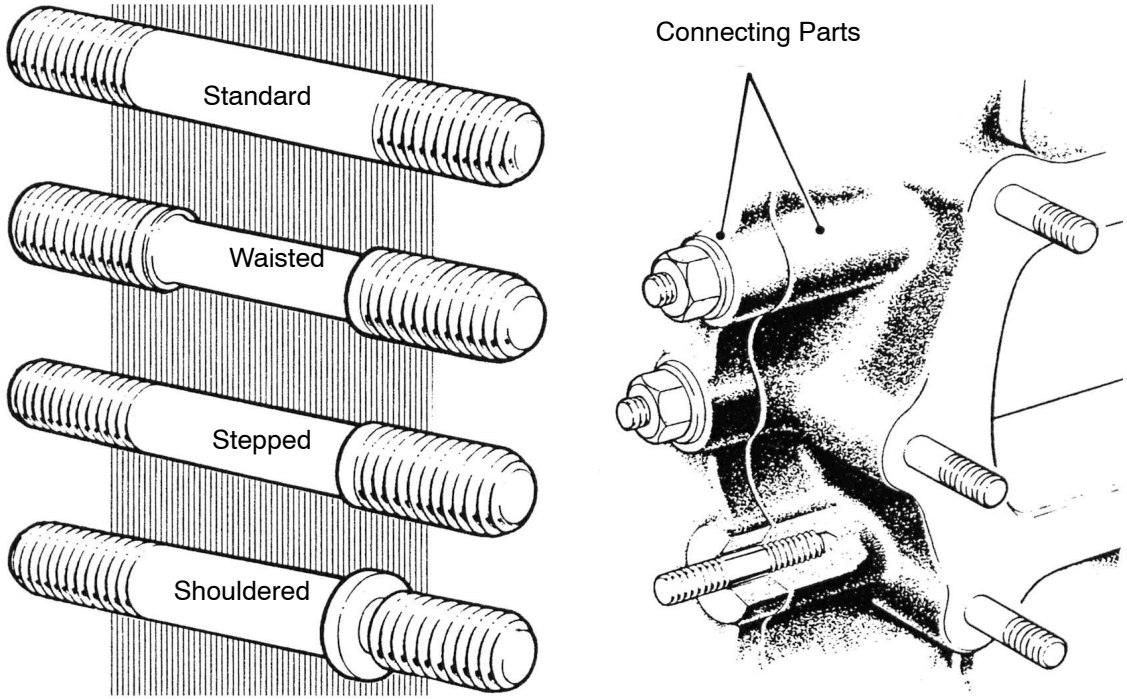

Figure 120 Examples of Studs and Their Use

FOR TRAINING PURPOSES ONLY!

© Lufthansa Technical Training

Stud Box

This is simply a piece of hexagonal metal bar, drilled and tapped through its axial centre-line.

1. The stud is screwed into one end and a standard set screw into the other.
2. The end of the screw is brought firmly into contact with the end of the stud to lock the items into one unit.
3. The stud can now be screwed tightly into its housing by using a spanner on the hexagon.

Once fitted, the stud box is removed by undoing the locking set screw to free the box, which can then be unscrewed from the stud.

Stud Insertion/Removal Tool

The stud is started into its thread by hand and then the inserting tool is placed over the protruding end until the plain shank of the stud enters the tool. A locating screw on the outer end of the tool is adjusted to position the tool correctly. The stud and tool can now turn together.

Lock Nuts

Two nuts are screwed onto the outer thread of the stud and locked firmly together by using two spanners. The stud is then screwed firmly into its housing by using a single spanner on the outer nut.

FOR TRAINING PURPOSES ONLY!

© Lufthansa Technical Training

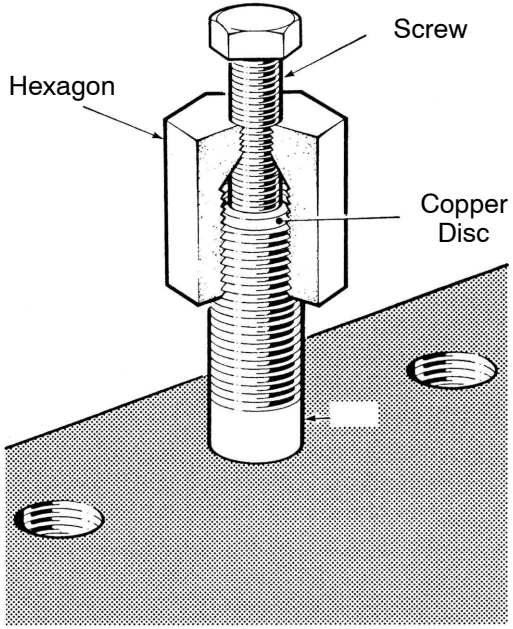

Stud Box

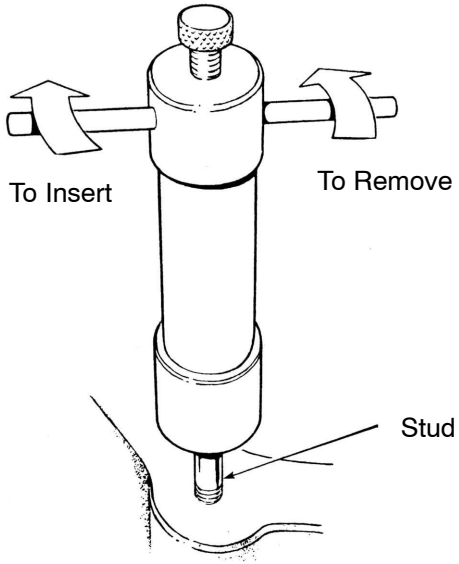

Stud Insertion/
Removal Tool

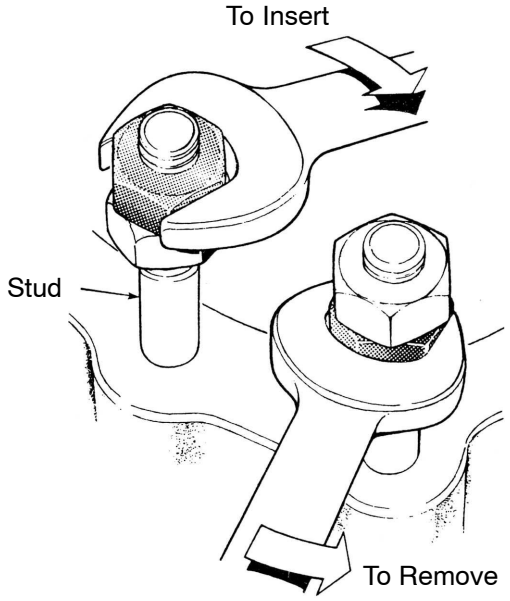

Lock Nuts

Figure 121 Stud Insertion/Removal

FOR TRAINING PURPOSES ONLY!

© Lufthansa Technical Training

Stud Removal

The condition of the stud dictates the method of removal. If it is undamaged, the stud can be removed as described previously. However, if the stud is damaged, removal should be carried out using one of the following methods.

Filed Flats

Providing there is sufficient stud protruding, flats are filed and a spanner or tap-wrench used to unscrew the stud (see opposite).

Ezi-Out

If the stud is broken level with or below the surface, drill as large a hole in the stud as possible (without encroaching on the stud threads) and remove the stud using an Ezi-Out screw-extractor.

FOR TRAINING PURPOSES ONLY!

© Lufthansa Technical Training

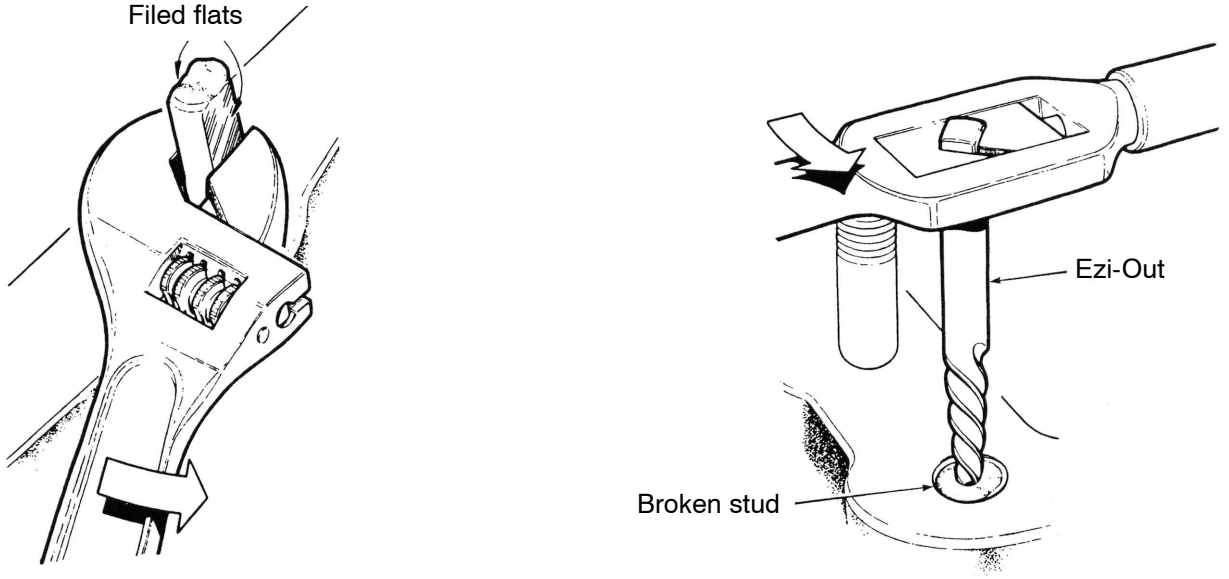

Figure 122 Stud Removal

FOR TRAINING PURPOSES ONLY!

© Lufthansa Technical Training

Self-Tapping Screws (Sheet Metal Screw)

These are used extensively to secure thin-gauge sheet-metal parts where nuts and bolts are either impractical or too expensive.

When screwed into a hole of the correct diameter they form their own thread. The screw head may be slotted or cross recessed.

FOR TRAINING PURPOSES ONLY!

© Lufthansa Technical Training

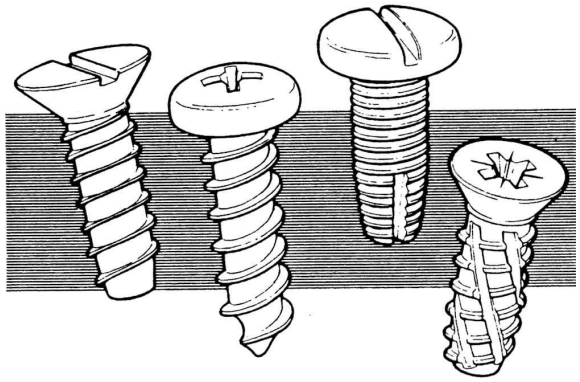

Figure 123 Self-Tapping Screws

FOR TRAINING PURPOSES ONLY!

© Lufthansa Technical Training

Nuts

General

Nuts for aircraft bolts and screws are manufactured in many sizes and shapes:

- Non–self–locking nuts
- Locking nuts
- High–temperature self–locking nuts
- Low–temperature self–locking nuts.

NON–SELF–LOCKING NUTS

These are used with drilled–shank hex–head bolts, clevis bolts, eye bolts or rivets and is designed to lock cotter pin or wirelocking.

Shear Castle Nut

Used only for shear load on clevis bolts.

These nuts are available in cadmium–plated nickel steel, corrosion–resistant steel and in 2024 aluminium alloy.

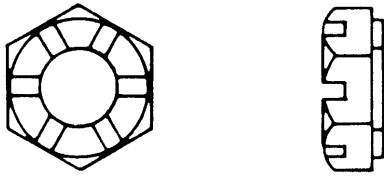

Shear castle nut
for shear loads

Castle Nut

These nuts are designed to fit on standard airframe bolts and may be used when the bolt is subjected to either shear or tensile loads. They are made from the same material as the shear castle nut.

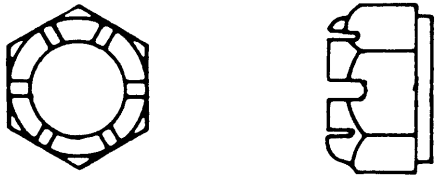

Castle nut for shear
and tensile loads

Slotted Engine Nut

This nut is designed for use on an aircraft engine and is not approved for airframe use. It is made of heat–treated steel.

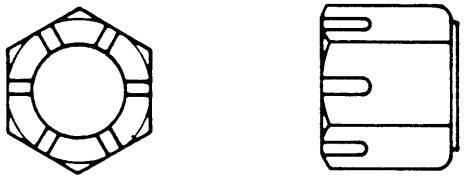

Slotted engine nut, just
for engine application

Wing Nut

Wing nuts are intended for use on hose clamps and battery connections, etc, where the desired tightness is ordinarily obtained by the use of fingers. They are made of either cadmium-plated steel or brass.



Wing nut

FOR TRAINING PURPOSES ONLY!

© Lufthansa Technical Training

Locking Nuts

Lock Nut

A lock nut is a thin, plain nut which is tightened down firmly onto the main, plain nut. This friction wedges the threads to prevent them both slackening.

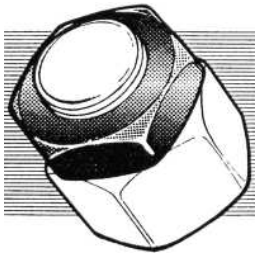

Nyloc stiffnuts

This nut has an unthreaded nylon insert permanently housed at the outer end. As the bolt threads engage the insert, the nylon is compressed into them, setting up a friction which prevents the nut unscrewing.

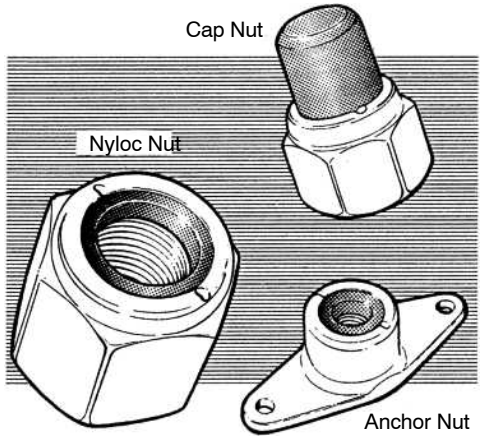

Nyloc Stiffnuts

Oddie stiffnuts

Oddie stiffnuts have six tongues at their outer end which are bent inwards to form a circle slightly less in diameter than the minor diameter of the bolt thread. As the bolt passes through the nut the tongues are pushed upwards, applying a locking load onto the bolt thread.

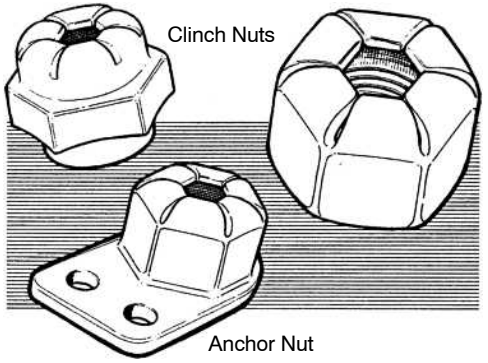

Oddie stiffnuts

Aerotight und Philidas Stiffnuts

These nuts have slotted locking extensions which are closed during manufacture to put the screw-thread out of alignment. As the bolt engages and realigns the extension thread, a grip is produced which provides a friction lock.

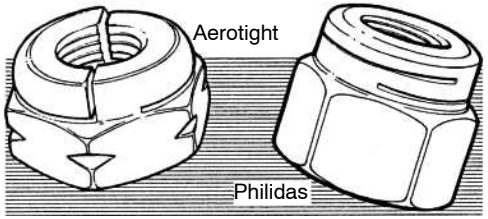

Aerotight and Philidas Stiffnuts

FOR TRAINING PURPOSES ONLY!

© Lufthansa Technical Training

Anchor Nuts

A floating type anchor nut is used when a slight range of movement is necessary to ensure the bolt can locate.

A strip nut is used when a row of anchor stiffnuts is required. In this arrangement the stiffnuts are fitted at equal intervals along a channel strip which itself is riveted to the blind side of the structure.

FOR TRAINING PURPOSES ONLY!

© Lufthansa Technical Training

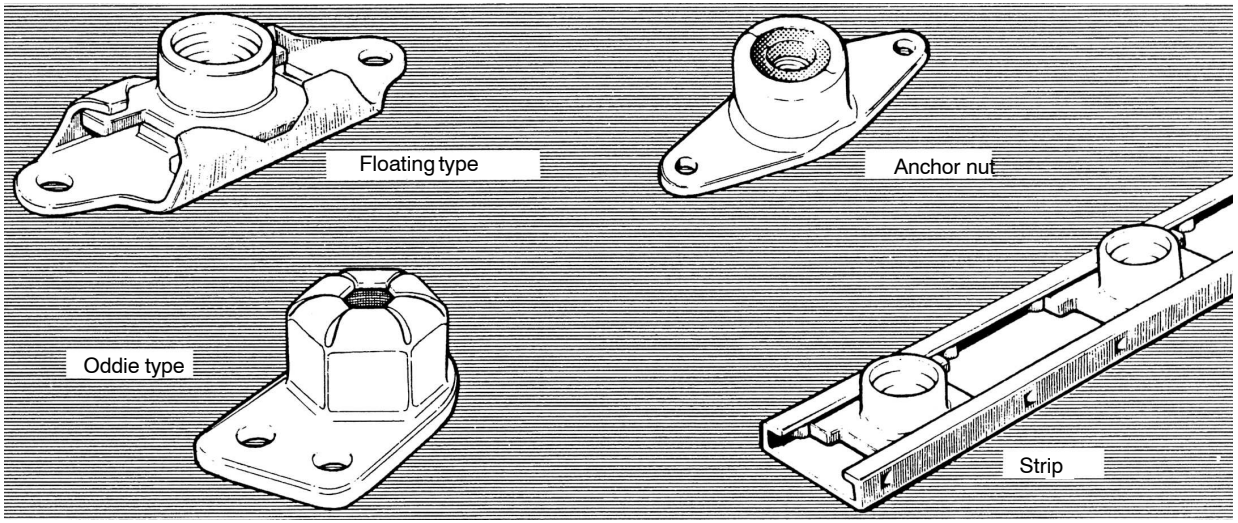

Figure 124 Anchor Nuts

FOR TRAINING PURPOSES ONLY!

© Lufthansa Technical Training

HIGH–TEMPERATURE SELF–LOCKING NUTS

In applications where temperatures exceed 121°C (25O°F), all-metal locknuts are used.

All–metal locknuts are constructed with either the threads in the locking insert out–of–phase with the load–carrying section, or with a saw–cut insert with a pinched–in thread in the locking section. The locking action of the all–metal nut depends upon the resiliency of the metal when the locking section and loadcarrying section are engaged by screw threads.

They are made out of steel alloy, CRES or CRES silver-plated.

Silver-plated nuts should not be used in contact with titanium.

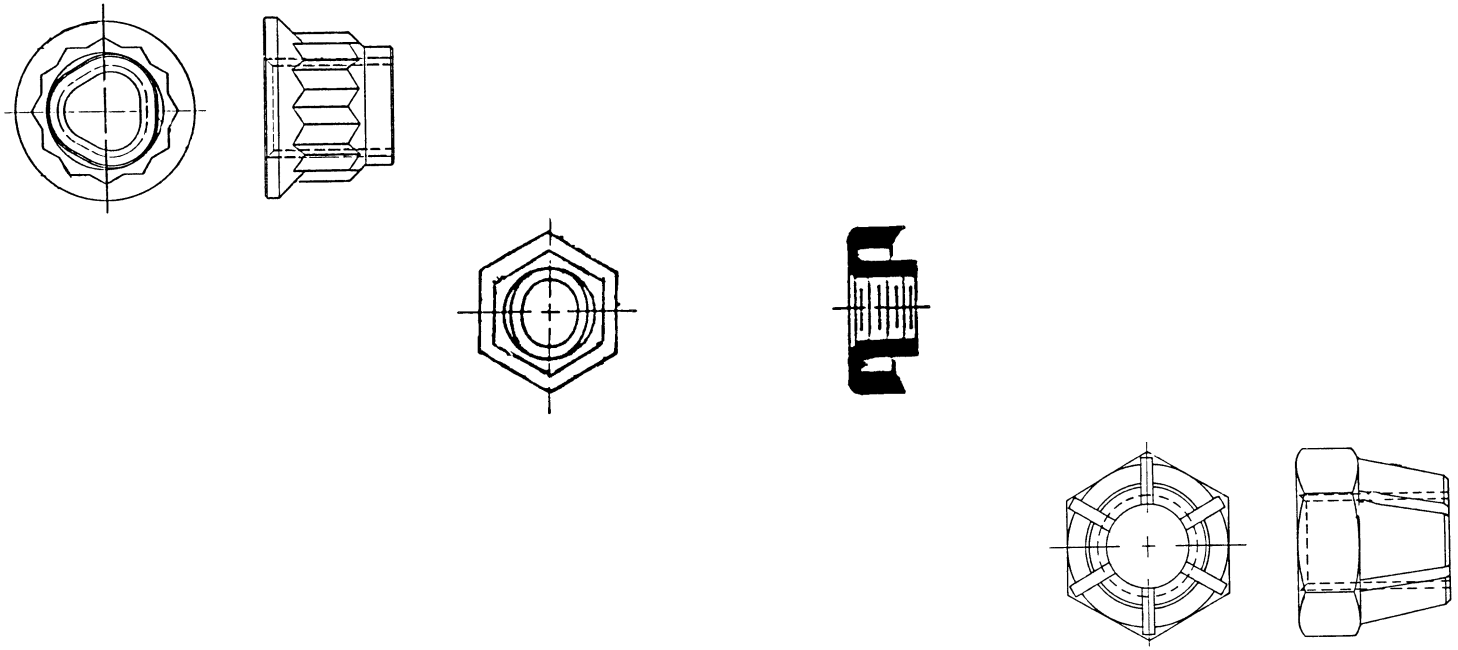

FOR TRAINING PURPOSES ONLY!

© Lufthansa Technical Training

LOW–TEMPERATURE SELF–LOCKING NUTS

These should not be used in any location where the temperature will exceed 121° C (250° F).

Fibre- or nylon-locknuts are constructed with an unthreaded fibre–locking insert held securely in place. The fibre or nylon has a smaller diameter than the nut, and when a bolt or screw is entered, it taps into the insert, producing a locking action.

After the nut has been tightened, ensure the rounded or chamfered end bolts, studs or screws extend at least one thread or chamfer through the nut. Flat end bolts, studs or screws should extend at least 1/32 inch through the nut.

If fibre–type self–locking nuts are reused, inspect the fibre carefully to ensure it has not lost its locking friction or become brittle. Do not reuse locknuts.

Bolts 5/16 inch diameter and over with cotter-pin holes may be used with self–locking nuts but only if free from burrs around the holes. Bolts with damaged threads and rough ends are not acceptable. Do not tap the fibrelocking insert.

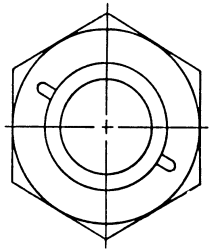

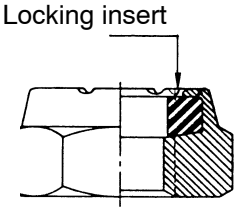

FOR TRAINING PURPOSES ONLY!

© Lufthansa Technical Training

Heli-Coil Inserts

Many screws and bolts are driven into threads cut into castings made of such soft metals as aluminium, magnesium or plastic. Rather than allowing these soft materials to wear each time the screw is inserted or removed, the holes are protected with Heli−Coil inserts.

Heli-Coil inserts are available for all thread standards. These inserts are manufactured from round wire which is converted into a diamond-shaped cross-section having a tolerance of .0005mm (0.0002 in) across the flats.

This precision wire is formed into a spiral coil which has a driving tang and a notch to facilitate removal of the tang after the insert is screwed into a Heli−Coil tapped hole.

Two types of Heli−Coil inserts are available.

- The standard type provides a free running thread
- The screw-lock type provides a resilient internal locking thread.

Heli−Coil inserts permit each thread to ”adjust” to the screw. In threaded assemblies there is always the possibility of lead and angle errors between mating members. Heli−Coil inserts are self−adjusting to compensate for such errors and thereby assure that all threads are fully engaged.

Heli−Coil Inserts assure full load distribution throughout the entire length of the thread because all threads are fully engaged. In an ordinary threaded assembly the first thread carried 45−50% of the load.

Wire thread inserts have a tang at the inner end to facilitate fitting with a special tool; this tang may be removed after installation if required.

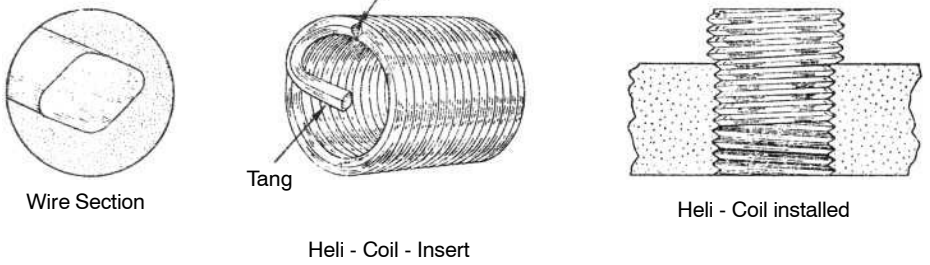

FOR TRAINING PURPOSES ONLY!

© Lufthansa Technical Training

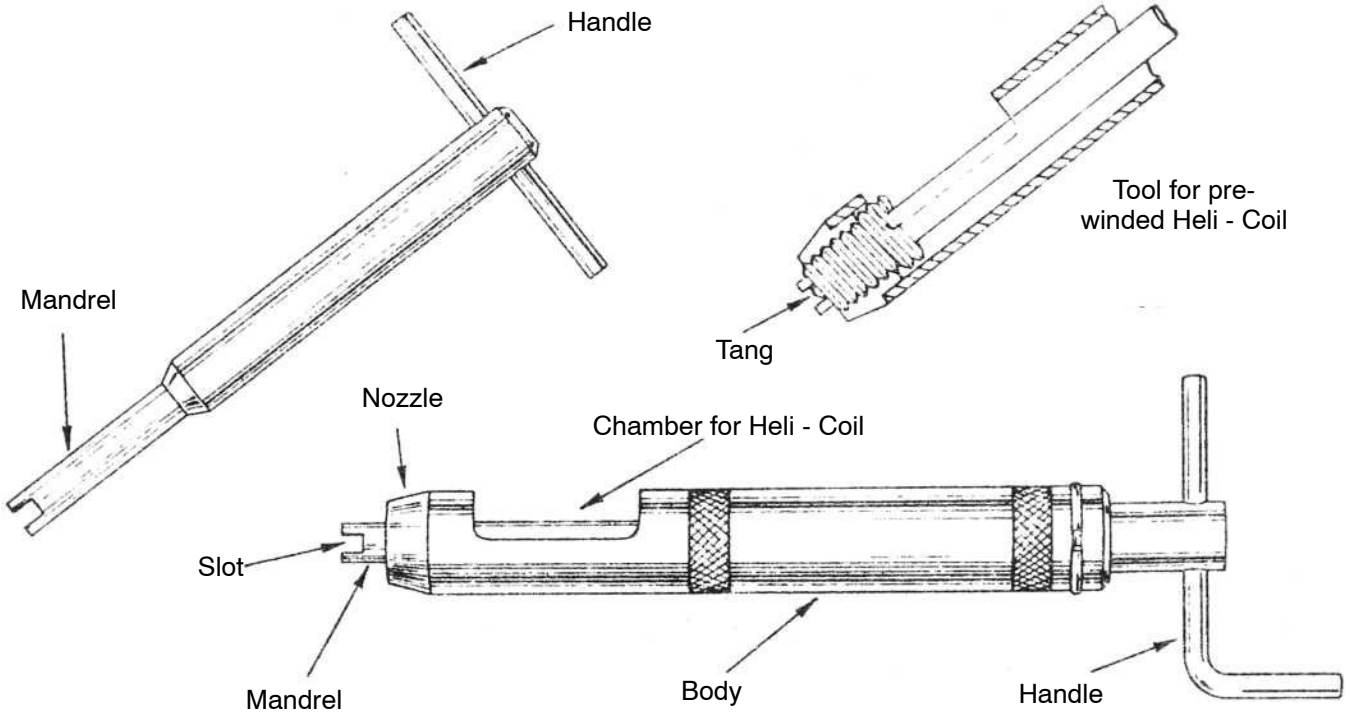

Figure 125 Heli-Coil Insertion

FOR TRAINING PURPOSES ONLY!

© Lufthansa Technical Training

Installation

Since the internal and external threads on a thread insert have the same number of threads per inch and the internal thread is designed to be of standard size, then a special-size tap is required to cut the threads into which the insert is fitted. These special taps and checking gauges are provided by the insert manufacturers.

- **Drilling**. The hole for the insert should be drilled to the diameter and depth specified in tables supplied by the insert manufacturer, the depth being calculated from the fitted length of the insert, plus the thread runout, plus a half pitch gap at each end of the insert.

  Care should be taken to ensure that the hole is drilled in the correct location and square to the surface, and that all swarf is removed before tapping. In some cases, particularly when the hole is near to the edge of the component, it may be necessary to check for cracks by a specified non−destructive testing method.

- **Thread Tapping**. The thread should be tapped with a special tap provided by the insert manufacturer, a straight−fluted tap being used for hand-tapping and a spiral−fluted tap for machine-tapping where this is possible.

  Normal workshop practices should be used for tapping, with special emphasis on cutting the thread coaxially with the hole.

  Lubricant should be used according to the type of metal being cut, e.g. a light mineral oil is generally recommended for tapping light alloys.

- **Thread Gauging**. After the insert thread has been cut it should be cleaned of all swarf and foreign matter. The thread should then be checked with a special GO/NO-GO plug gauge provided by the insert manufacturer to ensure that the thread is satisfactory.

  Any thread imperfections indicated by tightness of the GO gauge should be removed by further use of the original tap or, if this is ineffective, by use of a new tap.

- **Fitting the Insert**. An insert should be screwed into the hole by the use of either an inserting key or an inserting tool of the prewind type, depending upon which is recommended for the particular insert. A different sized key or tool is provided for each size of insert.
  - The inserting key should be used by sliding the insert onto it so that the tang is engaged in the driving slot at its forward end; the assembly should then be applied to the tapped hole, compressing the insert downwards with the thumb and forefinger of one hand while turning the key with the other hand; no downward pressure should be applied on the key. The insert will find into the thread and should be installed so that the outer end of the insert is at least half a pitch below the surface of the component.
  - When a prewind tool is used, the insert should be placed in the chamber with the tang towards the nozzle and the mandrel pushed forward through the insert to engage the tang in the slot.

    The mandrel should be rotated clockwise and pushed gently forward to engage the insert coil in the nozzle threads, rotation being continued until the insert is about to emerge from the outer end of the nozzle.

    The tool should then be placed squarely over the tapped hole and the handle rotated to transfer the insert from the tool into the tapped hole; no forward pressure should be used.
  - Unless otherwise stated, inserts should be installed so that the outer coil is at least half a pitch below the component surface.
  - Absolute cleanliness of the tapped hole and freedom from burrs is essential to prevent distortion of an insert. When jointing compound or anti−corrosive compounds are specified, they should be applied strictly according to the relevant instructions and surplus compound should be removed as specified after installing the insert.

FOR TRAINING PURPOSES ONLY!

© Lufthansa Technical Training

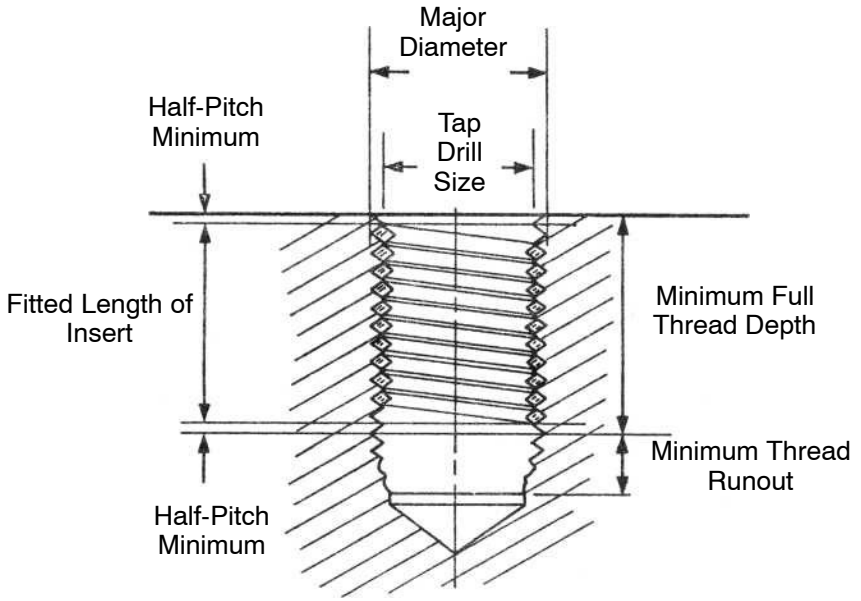

Installation data for Heli - Coil Inserts

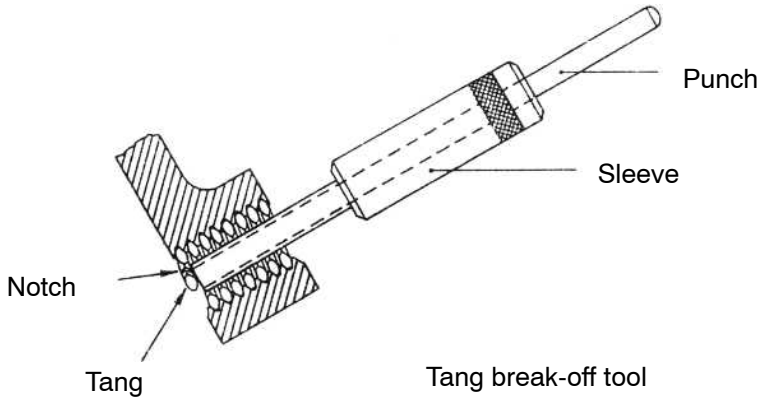

Tang break-off tool

Figure 126 Heli-Coil Installation Data

FOR TRAINING PURPOSES ONLY!

© Lufthansa Technical Training

- **Tang Removal**. It is not always necessary to remove the tang of a wire thread insert, but removal may be specified in some cases for screw clearance or product appearance, both in blind holes and through-holes.

  A tang in a through-hole is removed by use of the inserting key used as a punch, with the tang outside the engaging slot, or by use of a special punch. A sharp blow with a hammer on the key or punch will fracture the wire at the notch where the tang joins the coil.

  To remove the tang from an insert fitted in a blind hole, long round−nosed pliers are required; the tang should be bent backwards and forwards through the insert bore until it fractures at the notch and can be removed.

FOR TRAINING PURPOSES ONLY!

© Lufthansa Technical Training

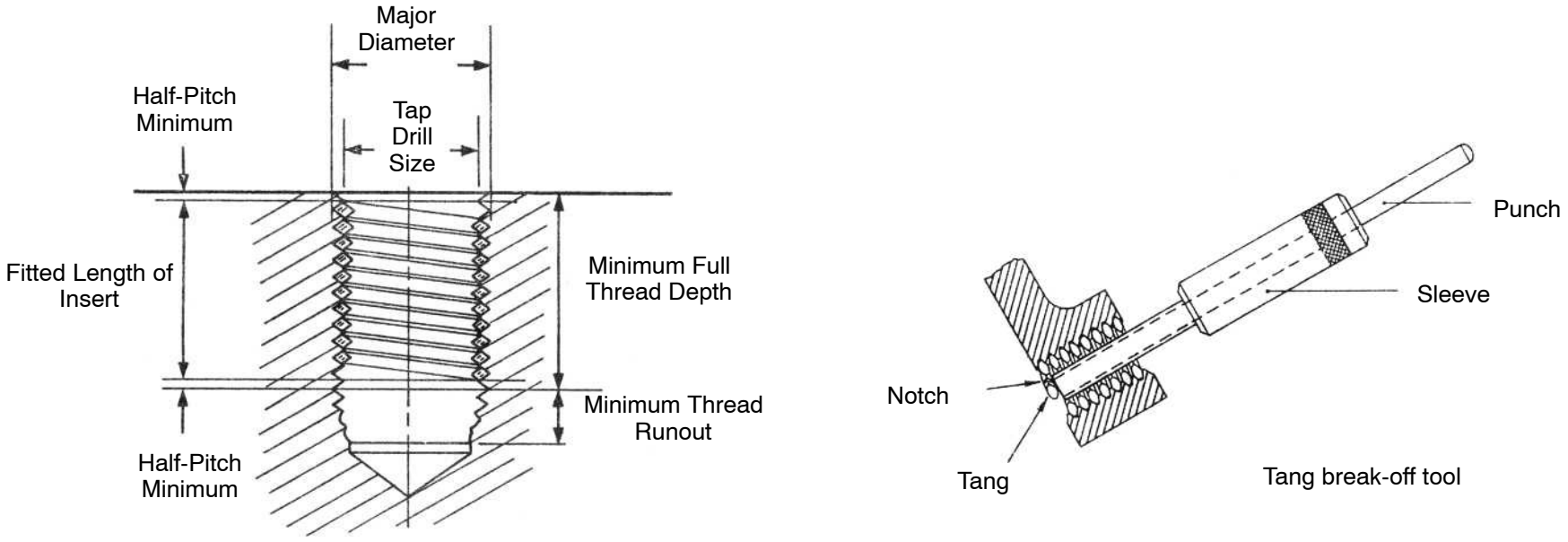

Installation data for Heli - Coil Inserts

Figure 127 Heli-Coil Installation Data

FOR TRAINING PURPOSES ONLY!

© Lufthansa Technical Training

Insert Removal

Under normal circumstances, particularly when fitting instructions have been carefully carried out, the removal of inserts should be unnecessary. However, if an insert has to be removed because of bad fitting, damage or wear, this can be done by bending the top coil inwards to form a rough tang and unscrewing the insert with the insertion tool or a pair of pliers.

Some manufacturers recommend the use of a tapered left–hand tap of appropriate size, which grips the top coils internally and unwinds the insert when rotated. Other manufacturers provide a range of extractor tools which are fitted with hardened and tempered blades; the blade will bite into the inner surface of the insert, which can then be unscrewed.

After removal of an insert, the threads in the hole should be carefully examined for damage before fitting a new insert.

FOR TRAINING PURPOSES ONLY!

© Lufthansa Technical Training

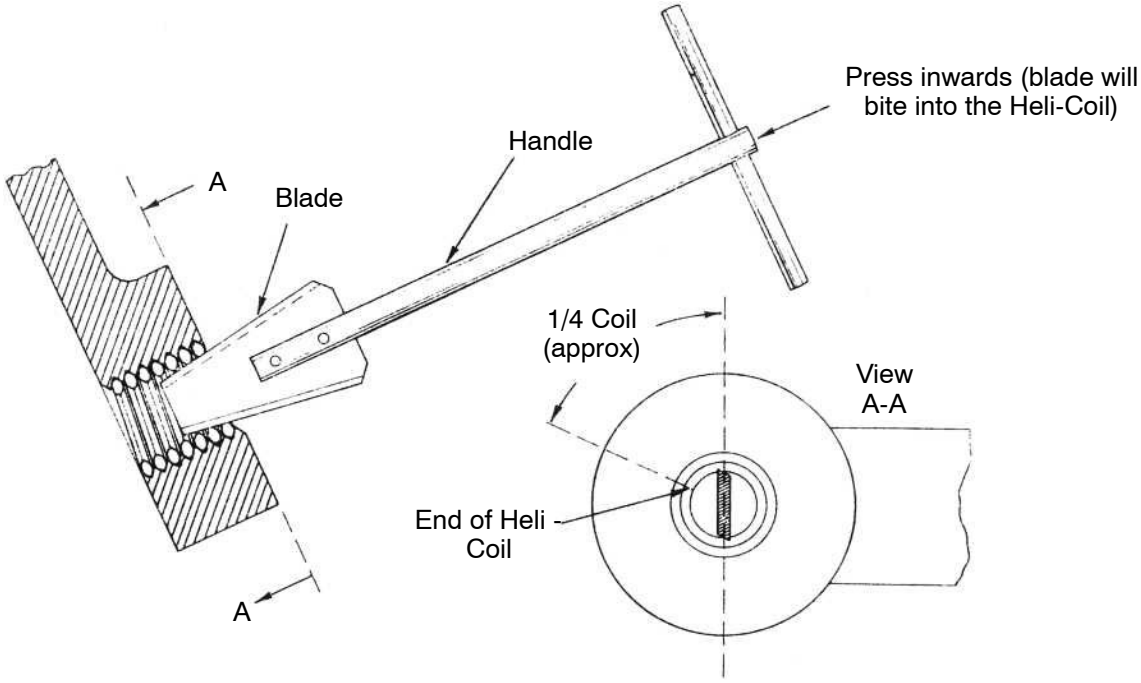

Figure 128 Typical Heli-Coil Extractor Tool

FOR TRAINING PURPOSES ONLY!

© Lufthansa Technical Training

M6.5.3 LOCKING DEVICES

TAB&SPRING WASHERS, LOCKING PLATES, SPLIT PINS, COTTER PINS, WIRELOCKING AND QUICK RELEASE FASTENERS

Safetying Methods

General

Safetying is the process of securing all aircraft bolts, nuts, screws, pins and other fasteners so that they do not work loose due to vibration. A familiarity with the various methods and means of safetying equipment on an aircraft is necessary in order to perform maintenance and repair.

There are various methods of safetying aircraft parts.

The most widely-used methods are:

- Wirelocking
- Cotter (split) pins
- Lock-washers
- Locking plates
- Snap–rings (circlips) and
- Self–locking nuts.

FOR TRAINING PURPOSES ONLY!

© Lufthansa Technical Training

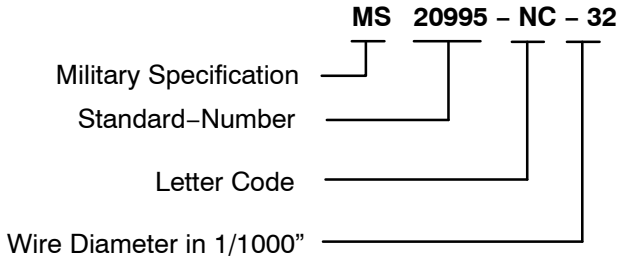

Letter Code	Material	Alloy Elements
C	CRES	19% Chromium 9% Nickel
F	Carbon Steel –Zinc plated–	0.18 to 0.23% Carbon
N	Ni Cr Fe – Alloy	Ni Base with 15.5% Cr and 8% Fe
NC	Ni Cu - Alloy (Monel)	Ni Base with 30% Cr

Figure 129 Material for Lockwire Application

FOR TRAINING PURPOSES ONLY!

© Lufthansa Technical Training

Nuts, Bolts and Screws

Wire Locking

Nuts, bolts and screws may be locked using either the single- or double-twist methods. The double-twist method is the most common method of wirelocking. The single-wire method may by used on small screws in a closely-spaced closed geometrical pattern, on parts in electrical systems and in places that are extremely difficult to reach.

FOR TRAINING PURPOSES ONLY!

© Lufthansa Technical Training

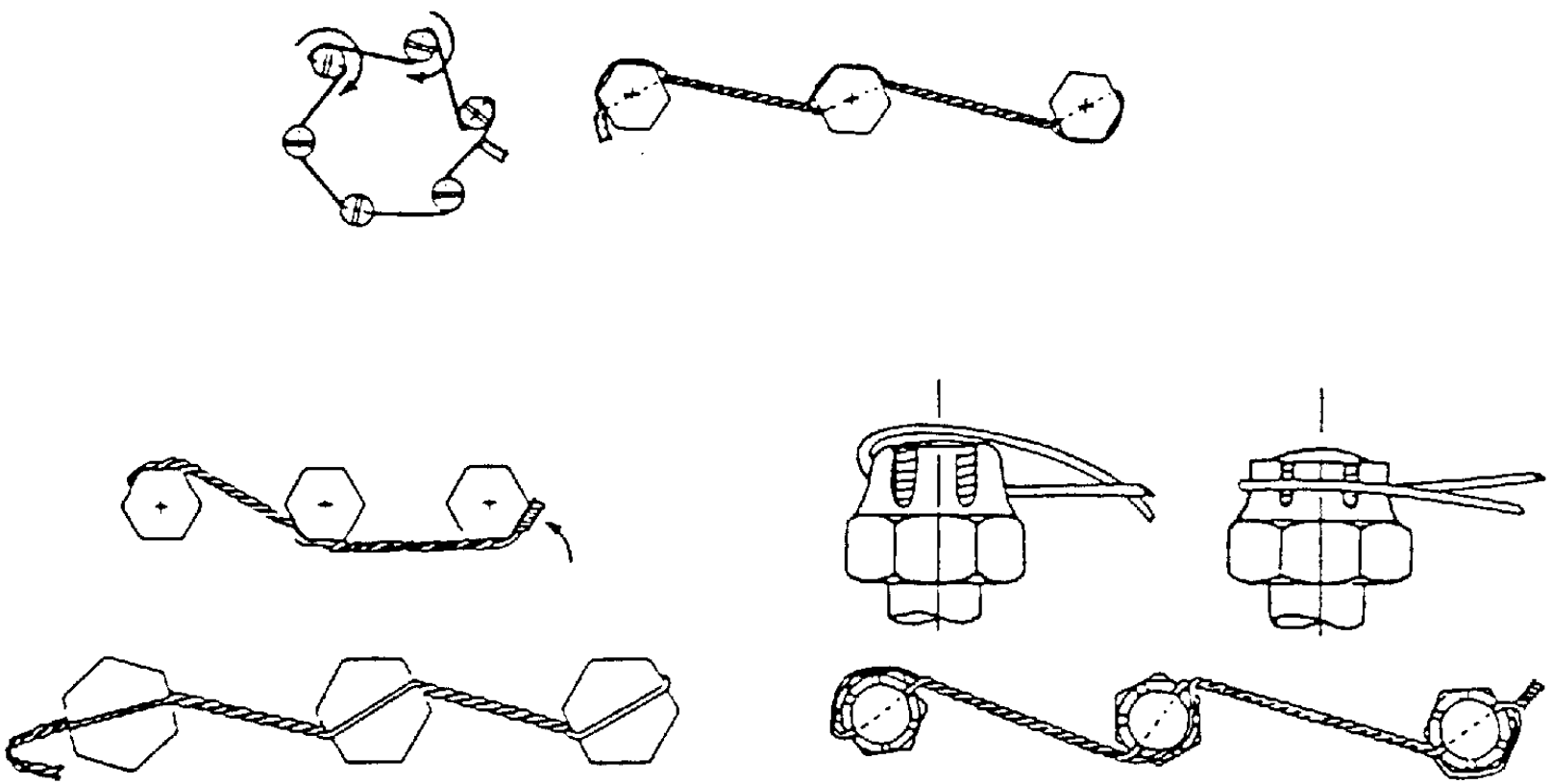

Figure 130 Examples for Wirelocking

FOR TRAINING PURPOSES ONLY!

© Lufthansa Technical Training

Wirelocking

Wirelocking is the most positive and satisfactory method of safetying cap−screws, studs, nuts, bolt−heads, and turnbuckle barrels which cannot be safetied by any other practical means. It is a method of wiring together two or more units in such a manner that any tendency of one to loosen is counteracted by the tightening of the wire.

FOR TRAINING PURPOSES ONLY!

© Lufthansa Technical Training

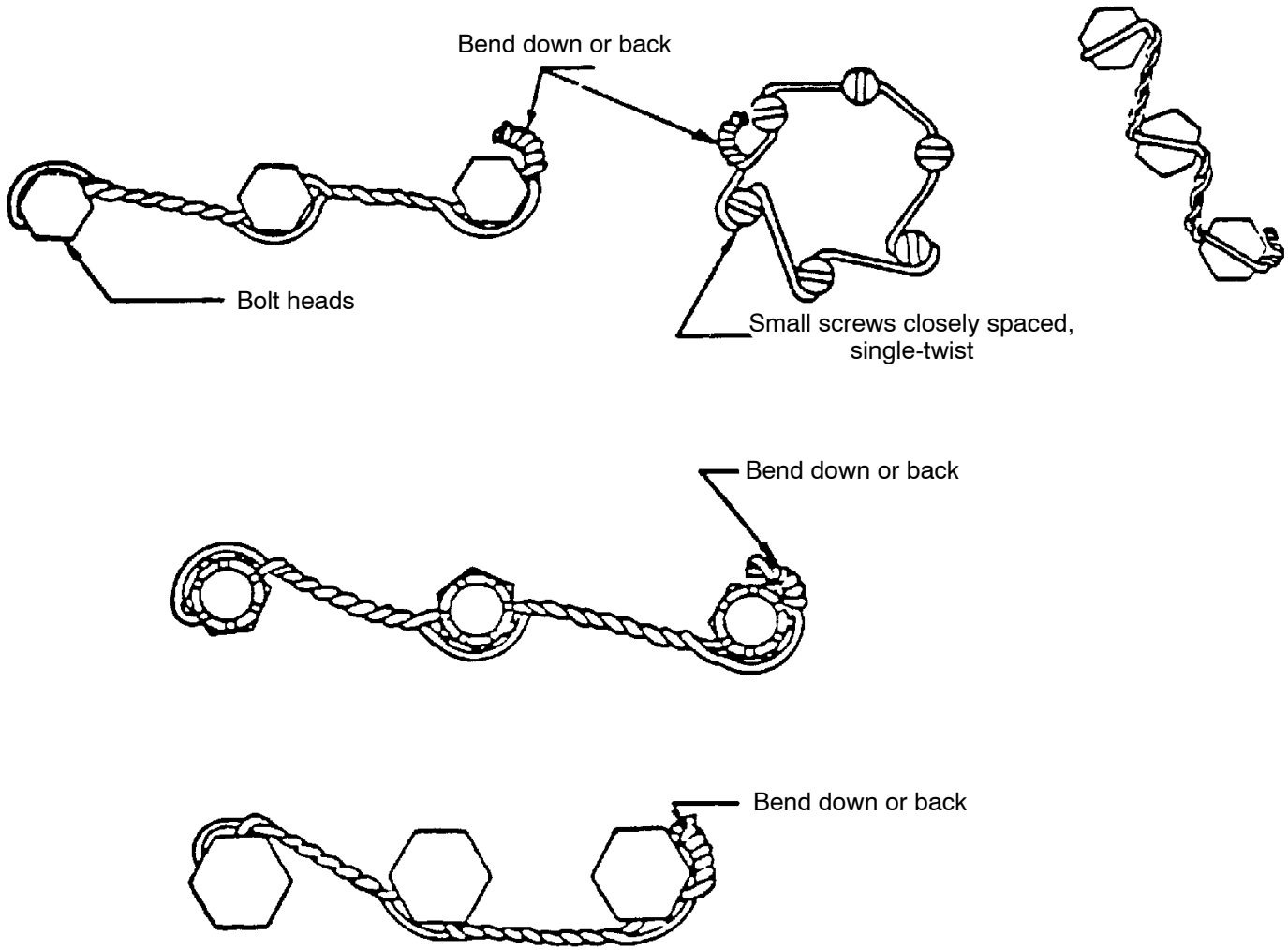

Figure 131 Locking of Screws (1)

FOR TRAINING PURPOSES ONLY!

© Lufthansa Technical Training

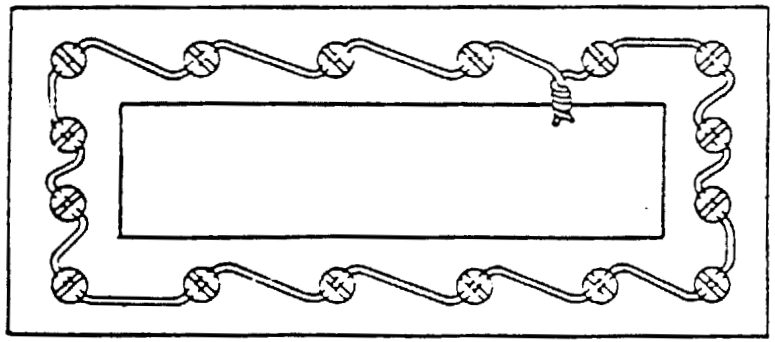

Small screws in closely spaced geometrical pattern (single-wire method)

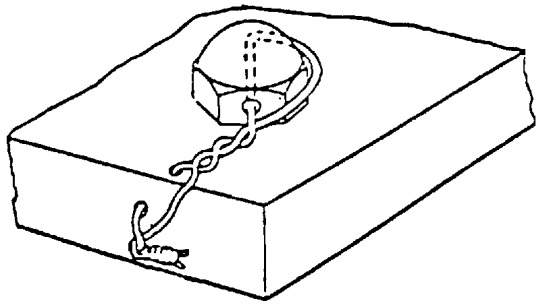

Wirelocking of a single bolt (double-twist method)

Note wirelocking shown is installed for right-hand threads; routing must be opposite for left-hand threads.



Screw heads (double-twist)

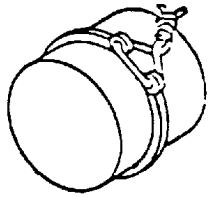

External snap (single-wire method)

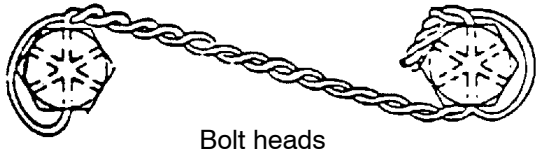

Bolt heads (double twist)

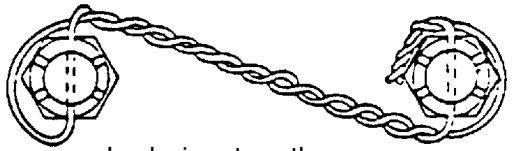

Lockwire at castle nuts

Figure 132 Locking of Screws (2)

FOR TRAINING PURPOSES ONLY!

© Lufthansa Technical Training

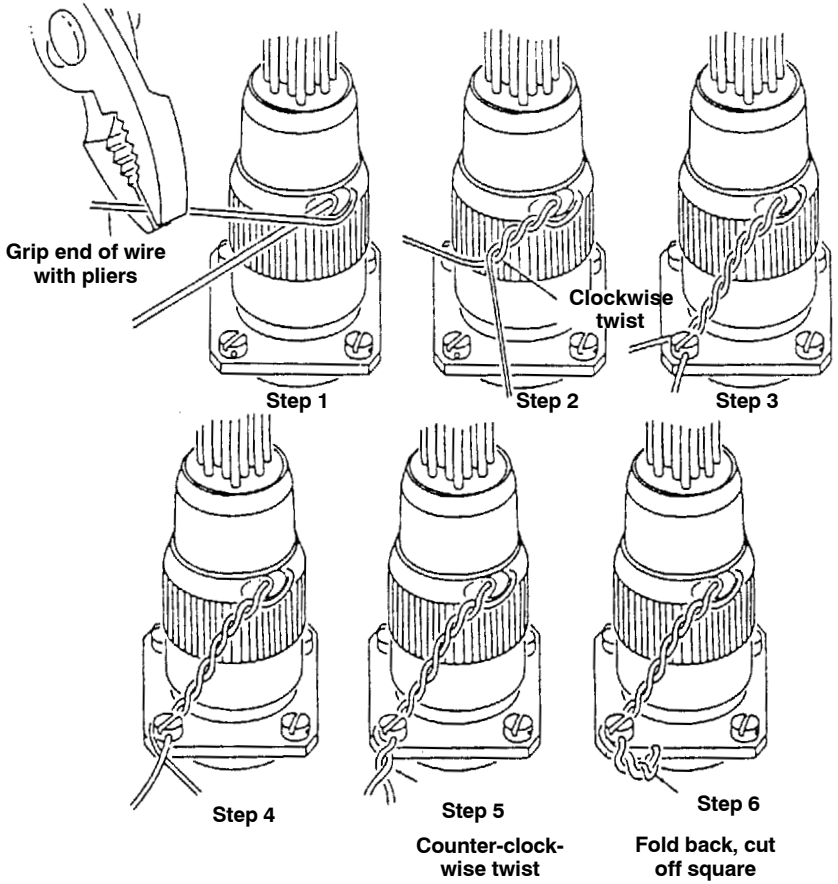

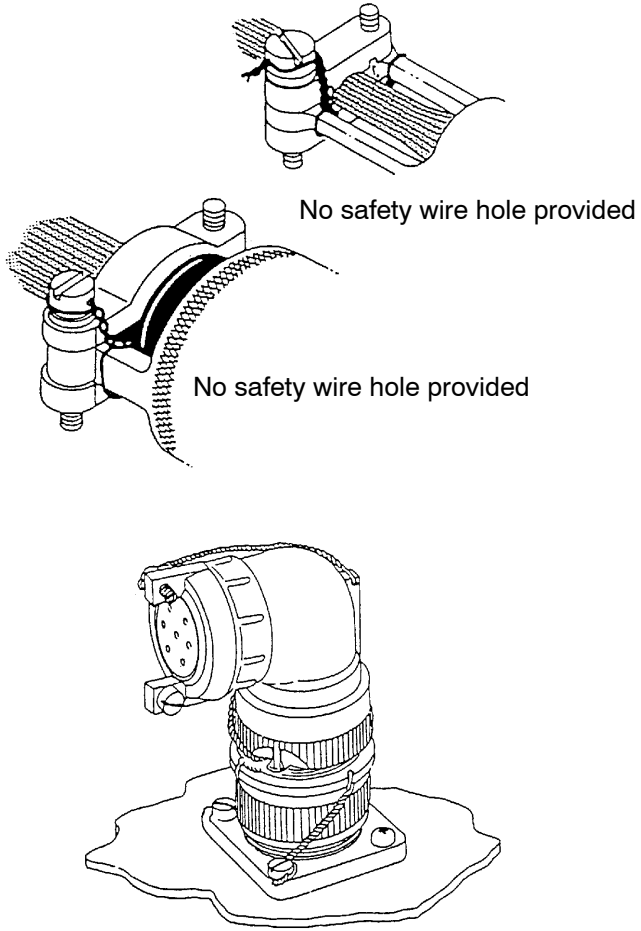

Figure 133 Locking of Electric Connectors

FOR TRAINING PURPOSES ONLY!

© Lufthansa Technical Training

Locking devices - washers

Various methods exist, depending on their application and the whim of the design authority, for locking nuts and bolts with washers.

Spring Washer

This is either a single coil or square section spring with sharp corners or a double-coil spring. It is fitted beneath the nut so that when the nut is tightened the spring is compressed, setting up a friction and thus preventing the nut from vibrating loose.

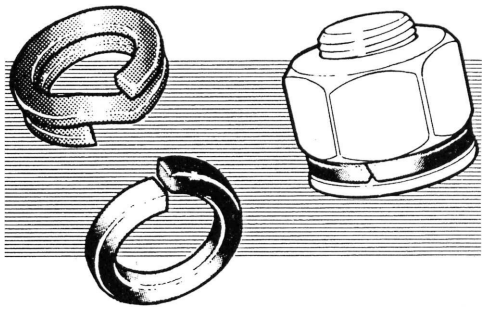

Spring washer

Tab Washer

This is a metal washer with two or more tabs, suitable for use with plain nuts. One tab is bent against one of the flats of the nut and the other is bent over an edge of the component or fitted into a slot or hole machined in the component.

It is not permissible to straighten the tabs and re-use the washer.

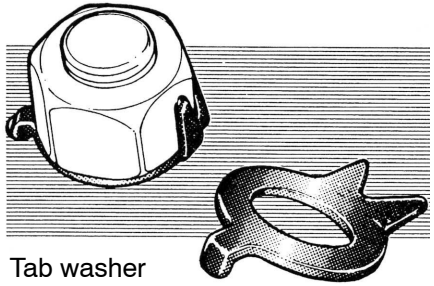

Tab washer

Shakeproof Washer

This is a spring steel washer with slanting serrations on its internal or external circumferences. The angle of the serrations is such that the nut is able to ride over them whilst being tightened, but any tendency to unscrew will be resisted by the sharp edges of the serrations biting into the underside of the nut (similar to a ratchet).

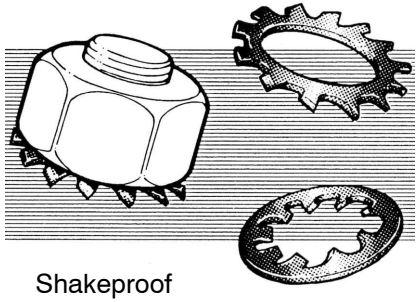

Shakeproof washer

FOR TRAINING PURPOSES ONLY!

© Lufthansa Technical Training

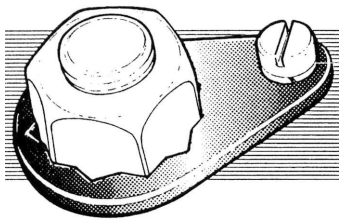

Locking plate

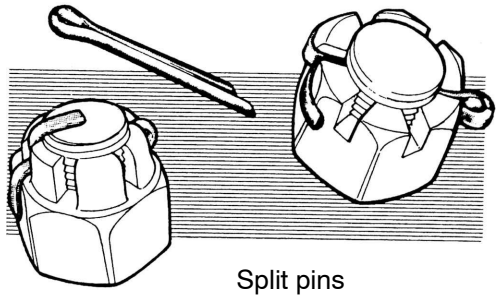

Split pins

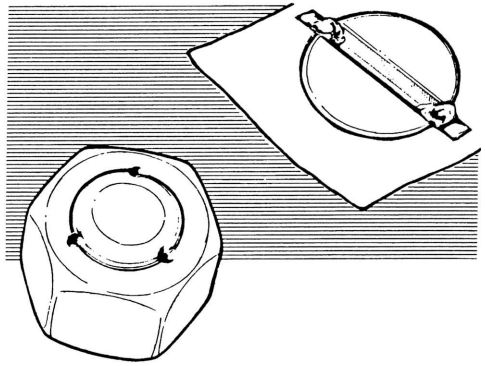

Center punching / burring

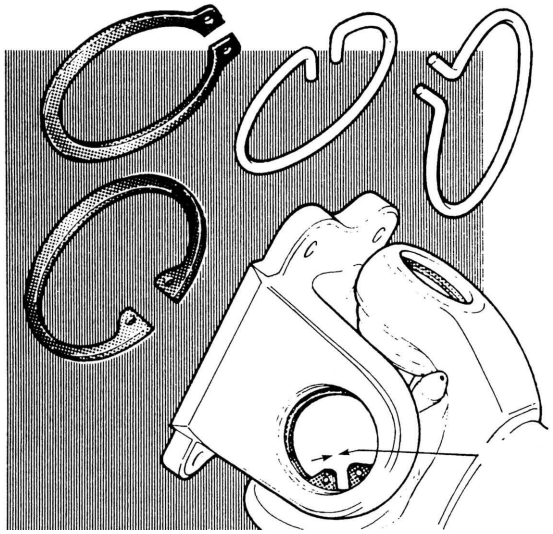

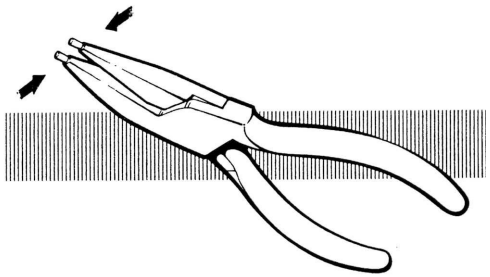

Circlips



Pal Nut

Figure 134 Other Locking Devices

FOR TRAINING PURPOSES ONLY!

© Lufthansa Technical Training

Quick-release fasteners

Pip Pin

This is a simple and secure, non-threaded fastener, allowing the rapid installation and removal of parts without tooling. Available as a simple locating pin (detent pin) and a locking version (double-acting).

4. **Ring pull detent pin**. A single ball locates the pin, no positive lock. The simplest option for location purposes. Simply push to insert, and pull to remove. Fitted with a 'keyring' loop.



5. **Double acting steel pin**. To release the ball lock mechanism, the ring handle can be pushed in or pulled out (double acting), moving a centre core, thus releasing the two balls, allowing the pin to be extracted. Instantaneous self locking, Vibration resistant, easy application.



Camloc

The Camloc fastener is built up from four basic elements:

- Receptacle,
- grommet,
- retaining ring and
- stud assembly.

The receptacle consists of an aluminium alloy forging mounted in a stamped sheet metal base. The receptacle assembly is riveted to the access door frame, which is attached to the structure of the aircraft.

The grommet is a sheet metal ring held in the access panel by the retaining ring.

Grommets are available in two types; the flush type and the protruding type. In addition to serving as the grommet for the hole in the access panel, it also holds the stud assembly.

The stud assembly consists of

- a stud,
- a cross pin,
- a spring and
- a spring cup.

The assembly is designed so that it can be quickly inserted into the grommet by compression of the spring. Once installed in the grommet, the stud assembly cannot be removed unless the spring is again compressed.

FOR TRAINING PURPOSES ONLY!

© Lufthansa Technical Training

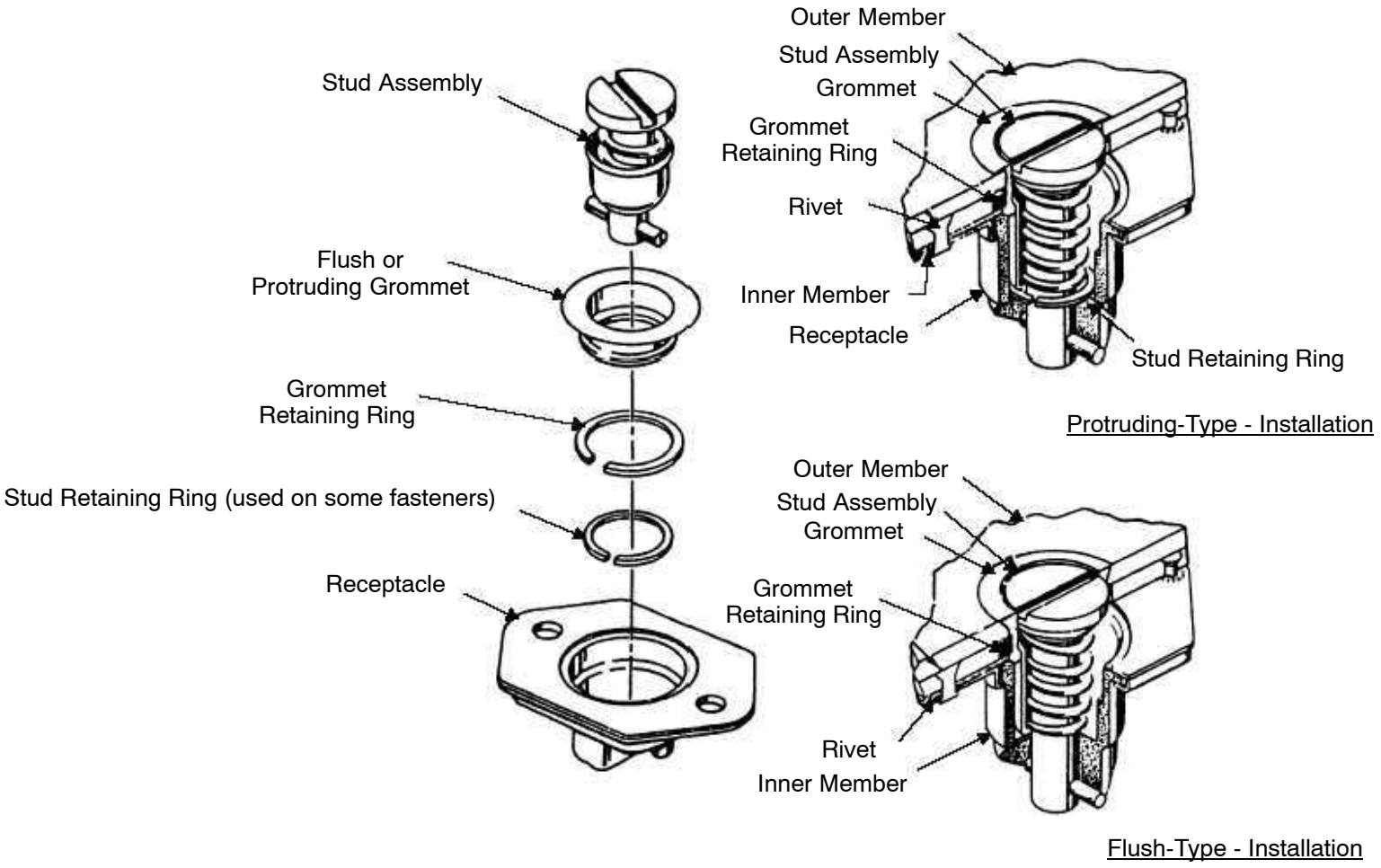

Figure 135 Camloc Fastener

FOR TRAINING PURPOSES ONLY!

© Lufthansa Technical Training

Dzus

Dzus fasteners are available in two types:

- One is the light−duty type, used on box covers, access hole covers, and lightweight fairing.
- The second is the heavy−duty type, which is used on cowlings and heavy fairings.

The main difference between the two types of Dzus fastener is a grommet, used with the heavy−duty fasteners. Otherwise their construction features are about the same.

The figure opposite, left, shows the parts making up a light−duty Dzus fastener. Notice that they include a spring and a stud. The spring is made of cadmium−plated steel wire and is usually riveted to an aircraft structural member. The stud comes in a number of designs (as shown in views A, B, and C) and mounts in a dimpled hole in the cover assembly.

Airloc

The figure opposite, right, shows the parts that make up an Airloc fastener.

Similar to the Camloc fastener, the Airloc fastener consists of a receptacle, stud, and cross pin. The stud is attached to the access panel and is held in place by the cross pin. The receptacle is riveted to the access panel frame.

Two types of Airloc receptacles are available:

- the fixed type and
- the floating type.

The floating type makes for easier alignment of the stud in the receptacle.

Several types of studs are also available. In each instance the stud and cross pin come as separate units so that the stud may be easily installed in the access panel.

FOR TRAINING PURPOSES ONLY!

© Lufthansa Technical Training

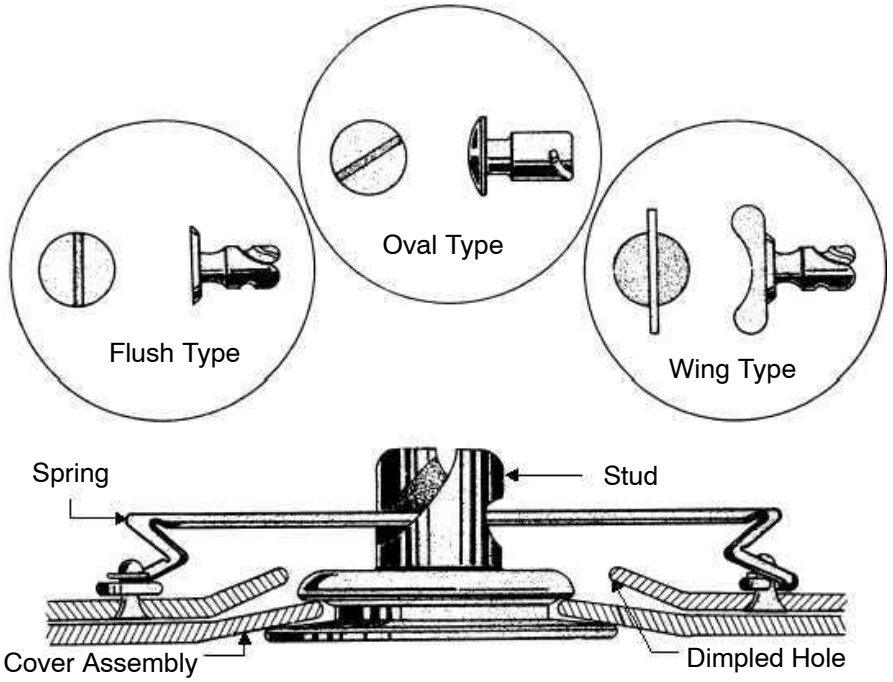

Dzus Fastener

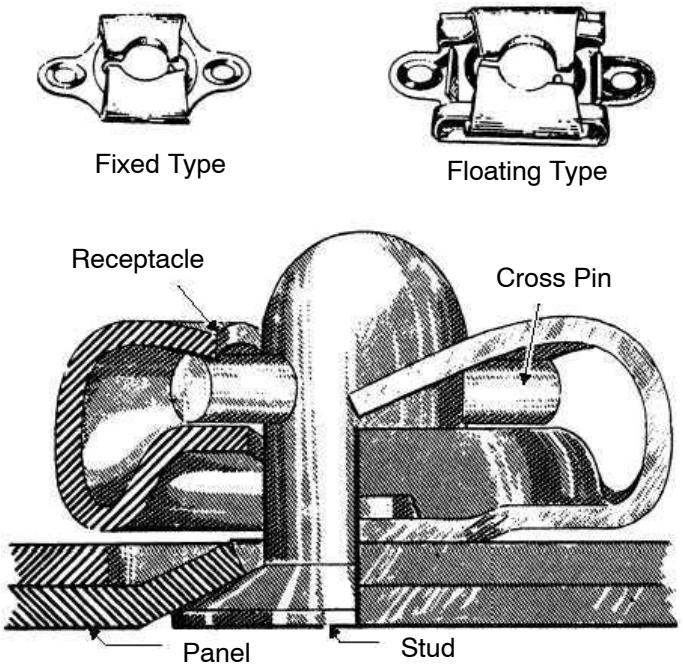

Airloc Fastener

Figure 136 Dzus and Airloc Fasteners

FOR TRAINING PURPOSES ONLY!

© Lufthansa Technical Training

Cotter Pins

Cotter pins are used to secure bolts, screws, nuts and pins. Some cotter pins are made of low−carbon steel, while others consist of stainless steel, and thus are more resistant to corrosion.

Stainless steel cotter pins are used in locations where non-magnetic material is required. Regardless of shape or material, use all cotter pins for the same general purpose: safetying.

The figure opposite shows three types of cotter pins and how their size is determined.

NOTE: Whenever uneven−prong cotter pins are used, the length measurement is to the end of the shorter prong.

Cotter pin installation is shown opposite.

- Use castellated nuts with bolts that have been drilled for cotter pins.
- Use stainless steel cotter pins.
- The cotter pin should fit neatly into the hole, with very little sideplay.

The following general rules apply to cotter pin safetying:

- Do not bend the prong over the bolt end beyond the bolt diameter (cut it off if necessary).
- Do not bend the prong down against the surface of the washer (again, cut it off if necessary).
- Do not extend the prongs outward from the sides of the nut if you use the optional wraparound method.
- Bend all prongs up to a certain radius - sharp-angled bends invite breakage.
- Tap the prongs lightly with a mallet to bend them.

FOR TRAINING PURPOSES ONLY!

© Lufthansa Technical Training

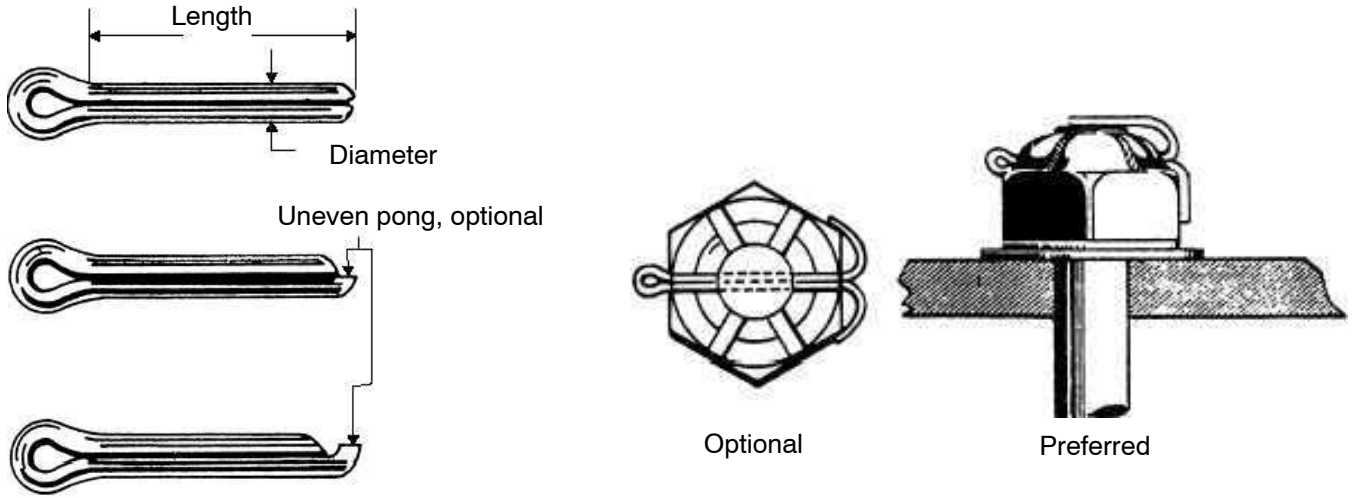

Figure 137 Cotter Pins

FOR TRAINING PURPOSES ONLY!

© Lufthansa Technical Training

Keys

Introduction

The name key is given to a specially−shaped piece of metal that is used to transmit a drive at considerable mechanical power from a shaft to a hub, or vice versa, when the mating surfaces are otherwise smooth.

The key is a solid piece of metal that is wedged between the parts, or fitted into matching recesses (or keyways) in the shaft and hub.

A key is of rectangular or square section, uniform in width, and of either uniform or tapered thickness. It is produced in many variations, depending upon the situation and the load to be transmitted. In general, keys are used only in circumstances which do not call for frequent separation of the parts.

Taper Keys

The agreed engineering standard is for a taper of 1 part in 100 on the thickness, with the tapering surface of the key matching the recess (or keyway) cut into the bore of the hub.

Several types of taper key are in common use:

- **Hollow Saddle Key**. This type of key is hollowed (shaped) to fit the radius of the shaft. When driven into position, its taper provides a friction drive between hub and shaft that is capable of transmitting a moderate load. There is no keyway cut into the shaft and, therefore, hollow keys are not suitable for heavy loads.
- **Flat Saddle Key**. This rectangular or square-section key is driven into a keyway in the hub and bears upon a flat on the shaft. It provides a more positive drive than that achieved by the hollow saddle key.
- **Gib−Headed Key**. This taper key is fitted into keyways which are machined partly in the shaft and partly in the hub. An important feature of fitting keys into these keyways is that the keyways must be perfectly aligned before fitting the key. With this in mind, it may be necessary to use a slave key when assembling the parts together; never rely upon the key to align the keyways as it is driven in.

  These keys and their keyways are capable of transmitting a much greater driving load than are the saddle-type keys. The head of the Gib−headed key is used as a means of removing the key when it is not possible to drift the key out from the opposite side.
- **Feather Key**. This type of key is used when axial movement is required between the hub and the shaft. An example of the use of a feather key is when a gear or a pulley must slide along a shaft whilst continuing to transmit drive. The keyway in the hub is cut to allow the key the minimum side and top clearance needed to provide a sliding fit.
- **Woodruff Key**. This key is made in the shape of a segment of a parallel−sided disc −similar to the capital letter D. It fits into a shaped cavity in the shaft which conforms closely to the profile of the key, and into a uniform keyway in the hub to provide a push fit on the sides with clearance along the top flat face of the key. The advantage of the Woodruff key is that it is suitable for fitting to either parallel or taper shafts.

FOR TRAINING PURPOSES ONLY!

© Lufthansa Technical Training

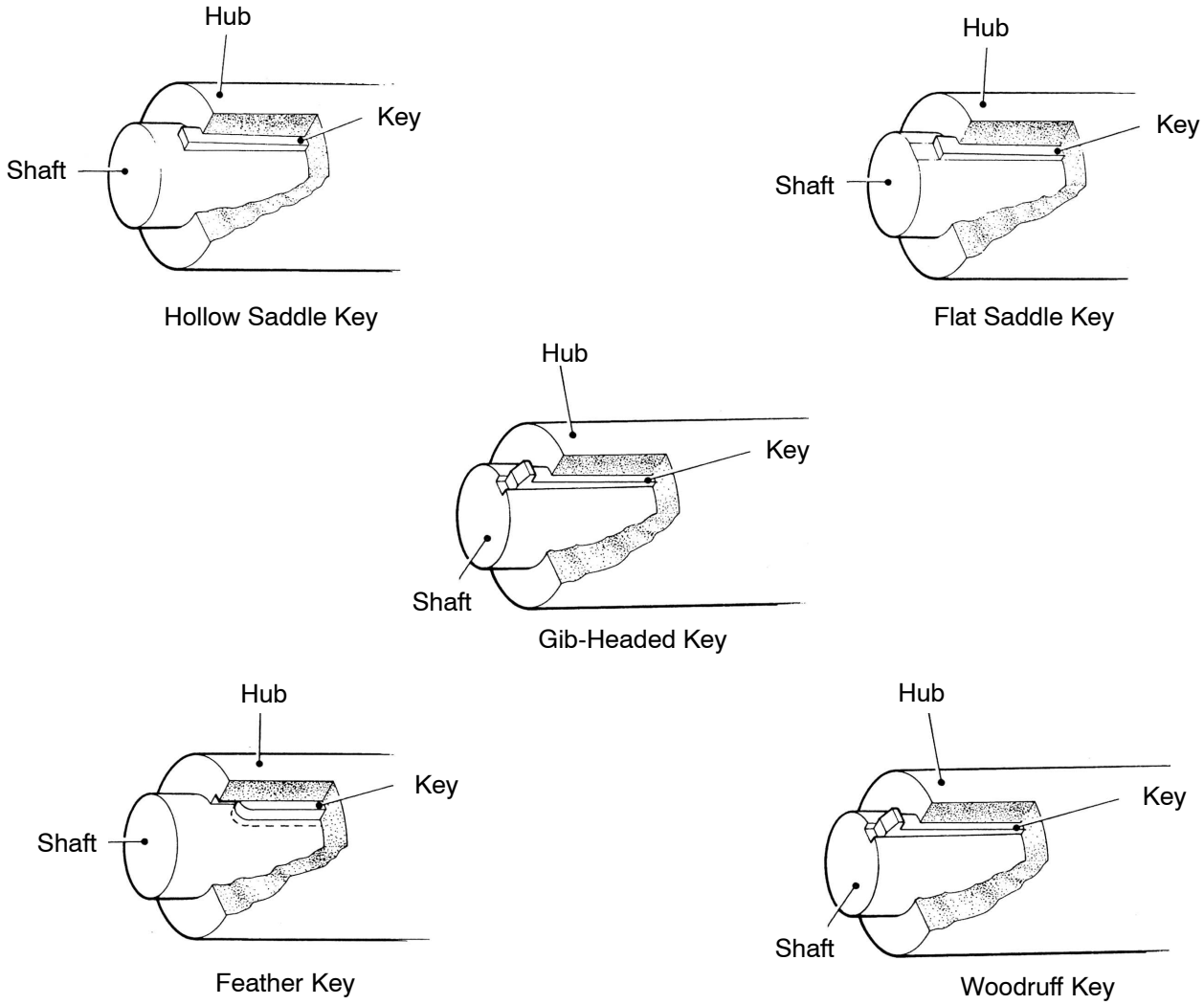

Figure 138 Keys

FOR TRAINING PURPOSES ONLY!

© Lufthansa Technical Training

M6.5.4 AIRCRAFT RIVETS

SOLID AND BLIND RIVETS, SPECIFICATION AND IDENTIFICATION, HEAT TREATMENT

Rivets (Solid Rivets)

General

The upset head of a solid rivet is formed by deformation of the shank.

Aluminium Alloy Rivets

Rivets made of US material 1100 are used in the ‘as fabricated’ (e.g. without heat treatment) condition. They are used to attach aluminium alloy components where a low–strength rivet is sufficient to hold the load.

Rivets made of US material 2017, 2117 and 7050 are heat treated by the manufacturer, no further treatment is necessary. They are used to attach aluminium alloy components where a medium strength is necessary.

NOTE: Rivets made from US material 2017 can also be installed after heat treatment, but this must be specified in a specific repair (For Heat Treatment refer to SRM chapter 51).

Rivets made of US material 2024 are supplied in -T4 condition. They are used to attach aluminium alloy components where high strength is necessary. These rivets are to be heat treated (Refer to SRM chapter 51).

Monel Rivets

Monel rivets, without heat treatment before use, are used in steel, titanium or aluminium alloy riveted assemblies.

Titanium Rivets

Titanium rivets are rivets with a cylindrical or a partially tapered shank. No heat treatment is necessary for this type of rivet.

Selection of the Correct Rivet

When repairing aircraft structure, it must be restored to the condition of structural integrity and aerodynamic shape that was needed for its original certification.

When selecting a rivet, the shear strength of the rivet must match the bearing strength of the material being riveted, with the bearing strength being slightly higher than the shear strength.

A commonly-used rule of thumb for selecting the rivet size is to choose a rivet whose diameter is at least 3 times the thickness of the thickest sheet being joined.

FOR TRAINING PURPOSES ONLY!

© Lufthansa Technical Training

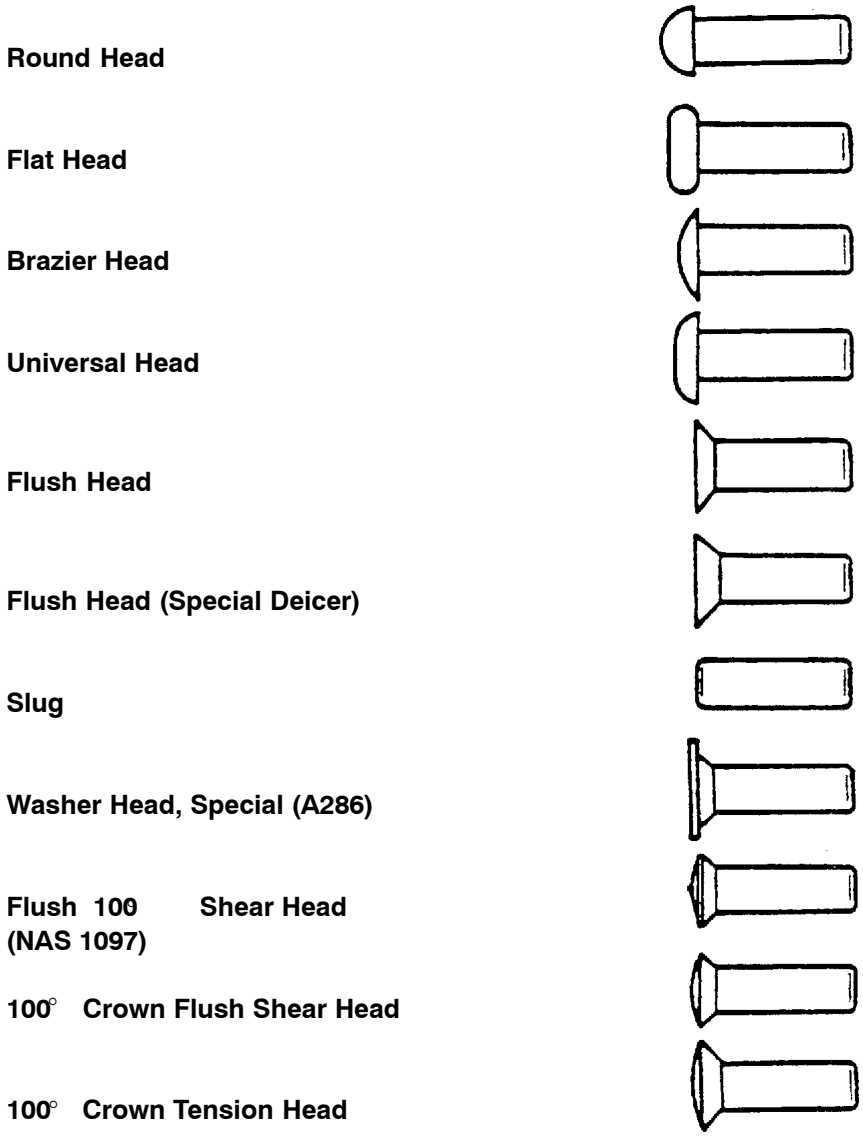

Figure 139 Head Types of Solid Rivets

FOR TRAINING PURPOSES ONLY!

© Lufthansa Technical Training

Rivet Materials

1100 Aluminium (A)

This is commercially pure aluminium, and a rivet made of this material is too soft and does not have the strength required for structural applications on aircraft. These rivets are designated by the letter A, and there is no identifying mark on their head. A–type rivets are used only in non–structural parts of an aircraft such as fairings and furnishings inside the cabin.

2117 Aluminium Alloy (AD)

There are more rivets of 2117 aluminium than any other alloy, and these rivets have sufficient strength for structural use. Since they do not need to be heat–treated (as do some of the other types of structural rivets) they can be driven in the condition they are received from the supplier.

AD rivets are identified by a **small dimple** in the centre of their head.

2017 Aluminium Alloy (D)

D–rivets are identified by a **raised dot** in the centre of their head.

They are the most often used rivet in Boeing airplanes. D–rivets are available as standard rivets and as shear head rivets. Shear head rivets (BAC R 15 CE.D) have smaller heads than ordinary 100–degree countersink rivets. They are generally used to attach the fuselage skin to the stringers.

NOTE: Do not REWORK shear head rivets.

NOTE: On Airbus aircraft it is permitted to heat-treat D-riVets before installation and store them in a freezer. (See DD- rivets)

2024 Aluminium Alloy (DD)

DD–rivets are made of heat–treated aluminium alloy and they are so called icebox rivets.

They are identified by **two raised dashes** on their heads.

They are placed in cold storage (–10°F or lower) immediately after the heat-treating operation to prevent them from becoming too hard to drive. This type of rivet is used where high strength is required.

Icebox rivets must be completely driven within 20 minutes after removal from the freezer or dry ice; they are not to be returned to cold storage once they have been removed.

5056 Aluminium Alloy (B)

Some aircraft parts are made of magnesium, and to avoid a dissimilar metal contact that could lead to corrosion, magnesium structure is riveted with 5056 rivets which contain about five percent magnesium as an alloying agent.

These rivets are identified by a raised cross on their head.

Shear head rivets are also available.

Corrosion–Resistant Steel (F)

Rivets of this material are used for fastening corrosion–resistant steel sheets for such applications as fire–walls and exhaust shrouds. They do not have any marking on their head.

Monel (M) (Nickel Alloy)

Monel rivets are identified with two recessed dimples or a raised **r** in their head and are used in some instances in place of corrosion-resistant steel rivets, where their somewhat lower shear strength is not detrimental.

Titanium (T)

Titanium rivets are identified by a raised **V** or **T** on their head and are used for fastening Steel Alloy and Titanium Alloy.

FOR TRAINING PURPOSES ONLY!

© Lufthansa Technical Training

RIVET MATERIAL	CODE	HEAD MARK	HEAT TREAT
1100 Aluminium Alloy	A	 No Mark	No
2117 Aluminium Alloy	AD	 Dimpled	No
2017 Aluminium Alloy	D	 Teat	No
2017 Aluminium Alloy	DU	 Raised Double Dash + Teat	Yes
2024 Aluminium Alloy	DD	 Raised Double Dash	Yes
7050 Aluminium Alloy	FV	 Corrugated Head	No
5056 Aluminium Alloy	B	 Raised Cross	No
Corrosion Resistant Steel	F	 No Mark	No
Monel	M	 Dimpled	No
Monel	M	 Raised r	No
Titanium	T	 Raised V	No
Titanium	T	 Raised T	No

Figure 140 Rivet Head Identification Markings

FOR TRAINING PURPOSES ONLY!

© Lufthansa Technical Training

Special Rivets

Thin sheet rivet

Since thin sheets used at the fuselage must not not be countersunk so deep, a flush rivet with a very small flush head has been developed, the so called shear head rivet.

The head of the rivet is slightly arced and has a special head mark.

Tank sealing rivets

Especial accurately manufactured AD- and DD- rivets are used in the tank area as sealing rivets (They are called CLOSE TOLERANCE RIVETS in the USA.).

These rivets are available with a Universal -, a 100°-flush head and a 82°-flush head.

FOR TRAINING PURPOSES ONLY!

© Lufthansa Technical Training

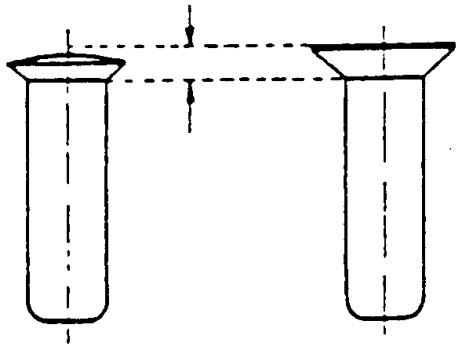

Shearhead rivet 100°

Flushhead rivet 100°

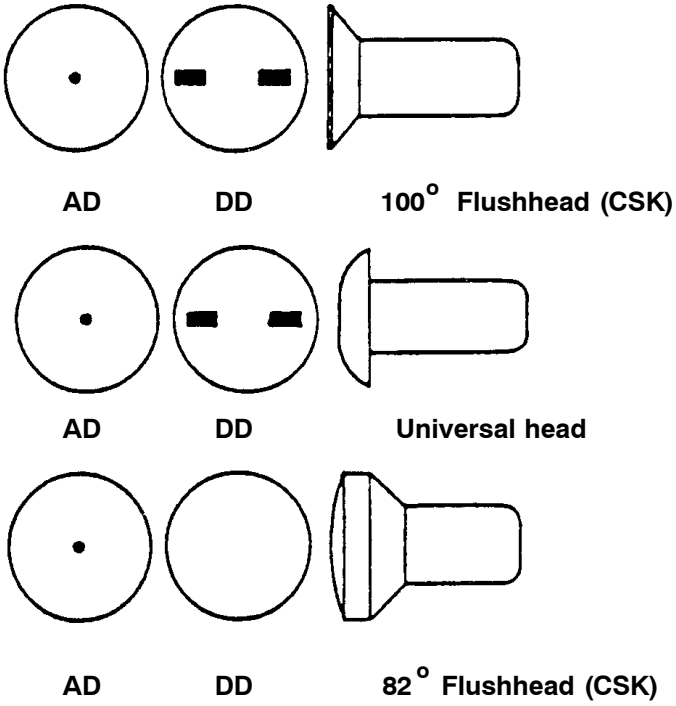

Figure 141 Rivet Heads

FOR TRAINING PURPOSES ONLY!

© Lufthansa Technical Training

THIS PAGE INTENTIONALLY LEFT BLANK

FOR TRAINING PURPOSES ONLY!

© Lufthansa Technical Training

Basic general for solid rivets

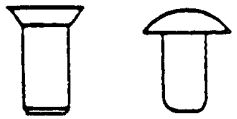

MS 20470 AD 5 – 12

Military Standards Number for AL rivets with Universal head
MS 20426 = 100 Flush head

Material designation

Rivet diameter 1/32" (5/32") Example

Griplength 1/16" (12/16") Example



NAS 1097 AD 5 – 12

National Aerospace Number for AL rivets with countersink
100°flush shear head

Material designation

Rivetdiameter 1/32 (5/32") Example

Griplength 1/16" (12/16") Example

Figure 142 Part Number Example

FOR TRAINING PURPOSES ONLY!

© Lufthansa Technical Training

Heat Treatment of Al-Rivets

Some rivets materials have to be heat treated befor using them in the manufacturing process.

This process is called **Solution Annealing**. The material is annealed at **495°C** for a certain time, and after that it is quenched in **20°C** cold water.

In this state the material is ductile for about 20 to 180 minutes (opposite table) and can be deformed without high loads and crystal damage.

After that period an autonomous hardening begins until the material reaches its end strength!

All rivets of the materials **3.1324, 2017, 2017A and 2024 - Alloys**, which are not used directly after the solution annealing process, have to be **stored** at **–18°C**.

At this temperature the rivets can be stored for **up to 7 days.**

At - 20°C the storage time can be increased up to 20 days.

As soon as the rivets are removed from the freezer, the autonomous hardening process of the material begins (opposite table).

FOR TRAINING PURPOSES ONLY!

© Lufthansa Technical Training

STANDARD	MATERIALS	HEAT TREATMENT YES/NO	SOAKING TEMPERATURE C (F)	SOAKING TIME <1> (minutes)		MAXIMUM QUENCHING TEMPERATURE C (F)	MAXIMUM QUENCH DELAY <2> (sec.)	MAXIMUM HANDLING TIME <3> (minutes)
				MIN.	MAX.			
MS20426DD	2024	YES	495 ± 5 (923 ± 9)	30	45	25 (77)	15	20
MS20470A	110	NO						
MS20470AD	2117	NO						
MS20470D	2017	<4>	495 ± 5 (923 ± 9)	30	45	25 (77)	15	90
MS20470DD	2024	YES	495 ± 5 (923 ± 9)	30	45	25 (77)	15	20
NAS1097AD	2117	NO						
NAS1097D	2017	<4>	495 ± 5 (923 ± 9)	30	45	25 (77)	15	90
NAS1097DD	2024	YES	495 ± 5 (923 ± 9)	30	45	25 (77)	15	20
NAS1241AD	2117	NO						
NAS1241D	2017	<4>	495 ± 5 (923 ± 9)	30	45	25 (77)	15	90
NAS1241DD	2024	YES	495 ± 5 (923 ± 9)	30	45	25 (77)	15	20
NAS1242AD	2117	NO						
NAS1242D	2017	<4>	495 ± 5 (923 ± 9)	30	45	25 (77)	15	90
NAS1242DD	2024	YES	495 ± 5 (923 ± 9)	30	45	25 (77)	15	20

Work Conditions for the Heat Treatment

Table 1

<1> The soaking time starts when the minimum soaking temperature is achieved.

<2> Quench delay is the time between opening the furnace or removing the rivets from the salt bath and the complete immersion of the load into the quenching medium.

<3> The time, within which the rivets must be upset, at room temperature 25 °C (77 °F).

<4> The repair procedure will state the heat treatment condition in which the 2017 rivets are to be installed. If not specified, the rivets are to be installed without heat treatment.

<5> 2017A rivets must be heat treated unless otherwise stated.

Figure 143 Heat Treatment of Rivets

FOR TRAINING PURPOSES ONLY!

© Lufthansa Technical Training

CHERRY-BUCK TITANIUM SHEAR PIN

This rivet is a one piece system, similar to the rivets noted before.

But compared to the mentioned rivets before, the CHERRYBUCK is build up from two different metals:

- Head and cylindrical shaft: Ti6Al4V (AMS 4967)
- Tapered part of the shaft: Ti/Cb (AMS 4982)

The upper part of the rivet is heat treated up to 95 KSI, to carry high shear loads.

The lower, tapered, ductile part (Titan/Columbium) forms the closing head.

This rivet is used as a substitute for Hi Lok and Lockbolts in the production of the passenger floor frame of the A330/340 for riveting robots, and saves up to 40% of weight without any loss of shear strength!

FOR TRAINING PURPOSES ONLY!

© Lufthansa Technical Training

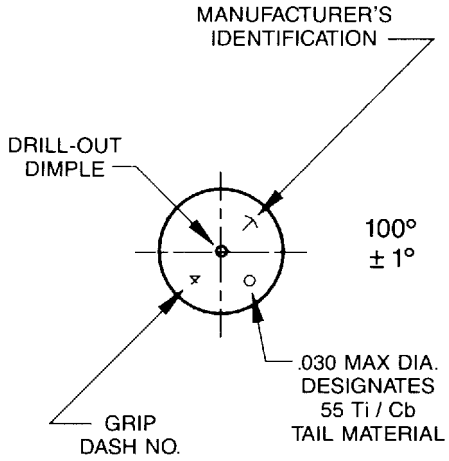

CODE LETTER	FINISH
None	None
D	I.V.D. Aluminum Coating per MIL-C-83488, Class 3 Type II
E	Aluminum Coating per NAS4006
WA	Color Anodize - Blue

PART NUMBER EXAMPLE

CSR925-6 D-4 R

- Special 1/32″ grip range-see grip length tables for individual fasteners
- Maximum grip in 1/16″ increments
- Finish code letter
- Nominal diameter in 1/32″ increments
- Basic part number

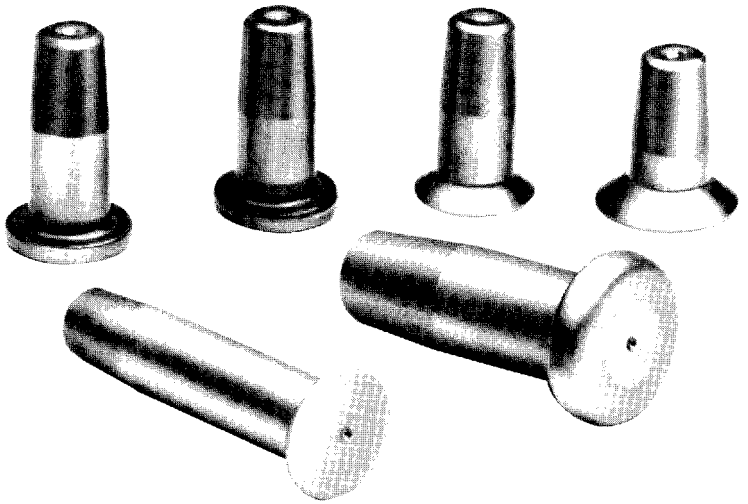

Figure 144 Cherrybuck - General

FOR TRAINING PURPOSES ONLY!

© Lufthansa Technical Training

Hi-Lok und Hi-Lite

General

There are two parts of the Hi-Lok and Hi-Lite (pin threaded) fastener:

6. a threaded pin with a head (universal or countersink)
7. a collar with an internal thread, an external hexagonal drive and an external shear groove.

The pin has a hexagonal recess in the threaded end. This recess permits the use of an Allen wrench to hold the pin during installation. The hexagonal drive end of the collar breaks off at the shear groove when the collar is installed to its correct torque value.

In some areas with a limited clearance, self-locking nuts and washers are used instead of collars. When used on wings, a washer is not used, reducing the risk of a fuel leak.

When pin (threaded) fasteners are used to join structure with outer surfaces that are not parallel, the conditions that follow are applicable:

- When standard aluminium alloy collars (ASNA2O28, DAN11, NSA5075 and NSA5O75W) are used, an out-of-parallel condition up to 3.0 degrees is acceptable.
- When standard CRES collars (ABS0258, ASNA2036, DAN12, HL73, HL86 and HL87) are used, an out-of-parallel condition up to 0.5 degrees only is acceptable.

NOTE: In these conditions, the axis of the fastener hole must be perpendicular to the surface on which the fastener head will seat.

- If the conditions above will be exceeded, the applicable self-aligning collar and washer must be used. When permitted, suitable self-aligning standard nuts and washers can be used.

Conditions as mentioned above are not applicable to the wing structure. For the wing structure, the conditions that follow are applicable:

- When standard steel nuts are used, spot-facing is necessary when the outer surfaces are more than 0.5 degree out of parallel.
- When standard aluminium alloy nuts are used, spot-facing is necessary as follows:
  - for 5/16 in. (8,0 mm) diameter pin (threaded) and the outer surfaces are more than 1,5 degree out of parallel
  - for 3/8 in. (9.5 mm) and larger diameter pin (threaded) and the outer surfaces are more than 1.0 degree out of parallel.

Pins (threaded) and collars are usually supplied lubricated (Schmackes/Cethylalkohol) and this lubricant must not be removed.

Pin (threaded) fasteners are usually installed in interference-fit holes. However, a clearance fit hole (unless specified differently) must be used if one or more of the structural members to be attached are made of:

- Steel
- Stainless steel
- Titanium.

Before the installation of pin (threaded) fasteners, ensure that:

- all the necessary pins and collars or nuts are of the correct type
- the pins and collars or nuts are made of the correct material
- the pins and collars or nuts have the correct surface protection and/or lubrication
- the pins have the correct grip length
- the thread of the pin has the same diameter as the collar or nut applicable to the pin.

Install the pin (threaded) fasteners with power or hand tools.

The correct hand tools are available from the various pin manufacturers (an example is shown in a figure later on) but a hand tool can be made locally with a ratchet handle tool made of hardened steel. It is necessary to modify this tool as follows:

- remove the ball in the square drive
- drill a hole for the Allen wrench through the square drive.

FOR TRAINING PURPOSES ONLY!

© Lufthansa Technical Training

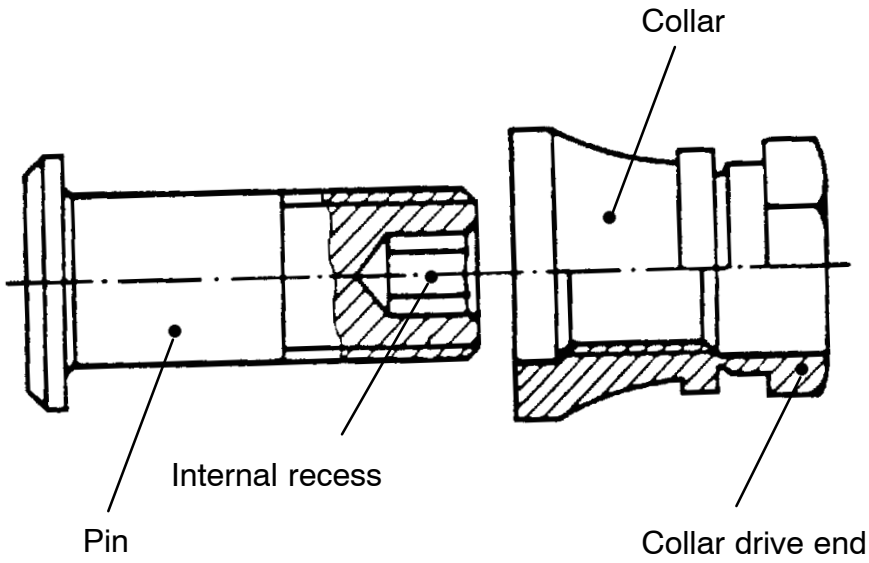

Figure 145 Standard Hi-Lok

FOR TRAINING PURPOSES ONLY!

© Lufthansa Technical Training

Commonly used Collars

In some cases the assembly of Collars, e.g. through the lack of space, is not possible.

In this circumstances the application of self-locking nuts ”BAC N 10 JC” for steel - and titan - Hi Loks is permitted.

In order to protect the structure a washer has to be applied, whereas the material of the washer must be the same as the material of the structure.

HI-LOK COLLARS

Material	Diameter	Supplier Part Number	Colour of Collars
2024	**Standard** and 1/64” Oversize	HL 79	Red
2024	1/32” Oversize	HL 84	Blue
2024	3/64” Oversize	HL 279	Black
CRES	**Standard** and 1/64” Oversize	HL 87	Cadmium Plate
CRES	1/32” Oversize	HL 393	Cadmium Plate
CRES	3/64” Oversize	HL 287	Cadmium Plate

FOR TRAINING PURPOSES ONLY!

© Lufthansa Technical Training

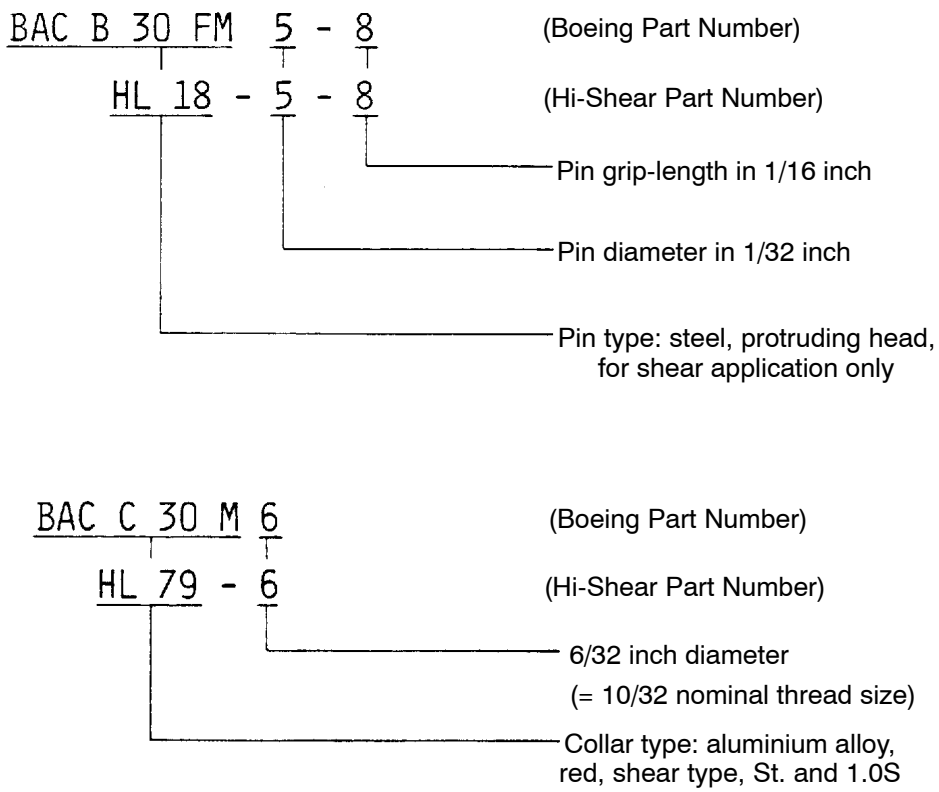

Figure 146 Hi-Lok Part Number

FOR TRAINING PURPOSES ONLY!

© Lufthansa Technical Training

The Principle Functionality of Hi-Lite Fasteners

In conventional aerospace fastener designs, the pin thread run-out area and the mating collar/nut counterbore depth do no useful work in terms of load-carrying.

In fact, this particular portion of the system can, for the most part, be considered “extra” material that, where possible in the interests of weight savings, should be reduced to a minimum.

All standard-thread-length pins require a 2-pitch maximum thread run-out in the transition thread-to-shank zone measured from the grip plane.

The fundamental advantage of the Hi-Lite system is that the operation normally considered necessary for a reduced transition area and thus shorter thread length is completely eliminated.

The coloured portion shows thread-length saved when comparing standard pin lengths with the 1 pitch maximum thread run-out on the Hi-Lite reduced transition zone.

The Hi-Lite fastener system achieves full performance along with reduced weight from a completely formed, shorter, work-hardened thread that extends into the transition zone of the pin to within 1 pitch of the grip plane. Hi-Lite carries all the benefits built into standard thread length pins with their 2-thread pitch such as Hi-Lok (the familiar pin/collar system employed on airborne assemblies throughout the industry).

It is the short thread length which provides considerable savings. On a comparison basis with the standard Hi-Lok, for example, Hi-Lite weighs in with an advantage as high as 15%.

FOR TRAINING PURPOSES ONLY!

© Lufthansa Technical Training

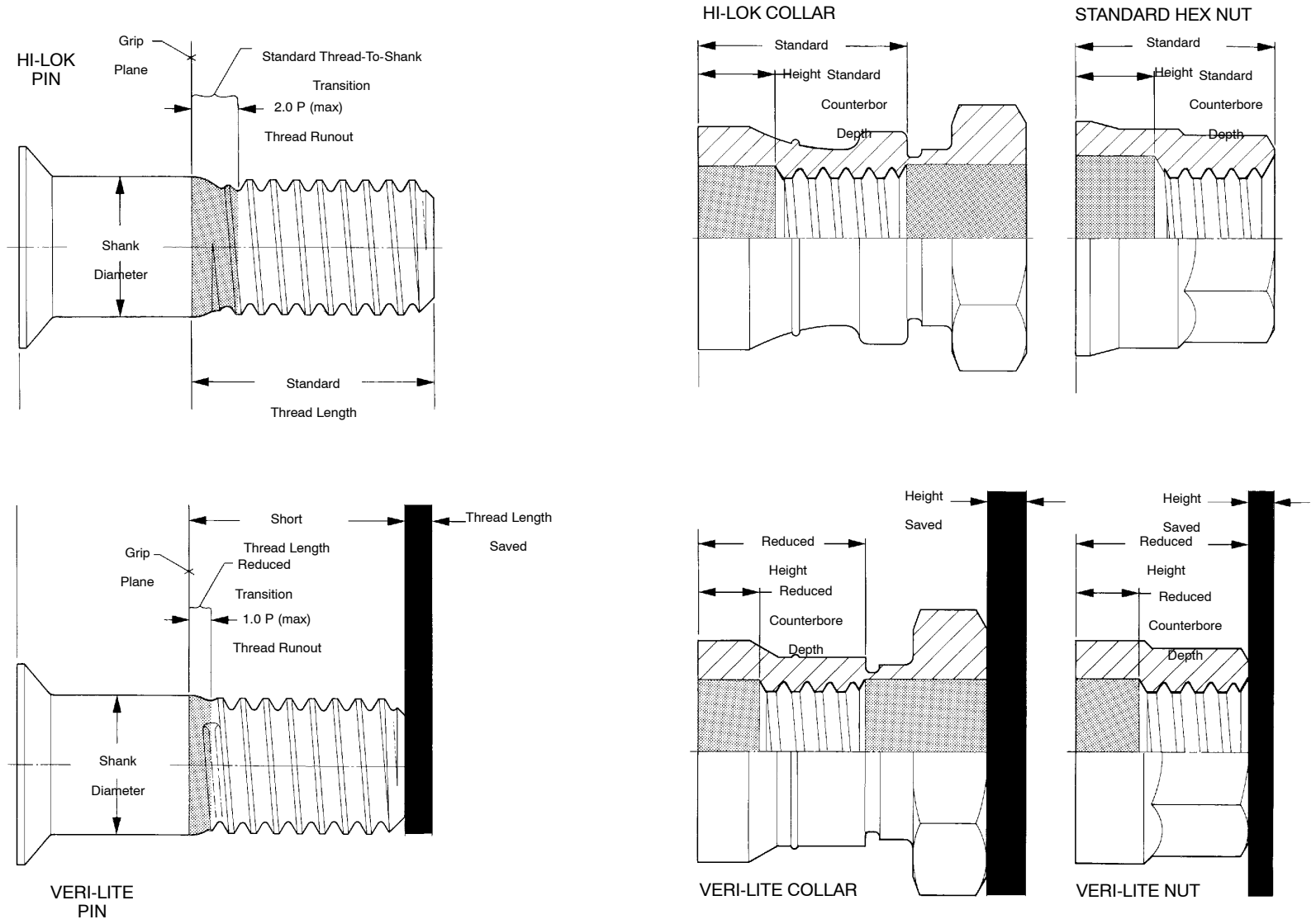

Figure 147 Hi-Lok/Hi-Lite Comparison

FOR TRAINING PURPOSES ONLY!

© Lufthansa Technical Training

HI TIGUE Fasteners

Hi Loks which have instead of “HL“ **“HLT”** punch marked on the head, are Hi Lok Fatique Fasteners, they are used with special dimensional tolerances of the bore.

FOR TRAINING PURPOSES ONLY!

© Lufthansa Technical Training

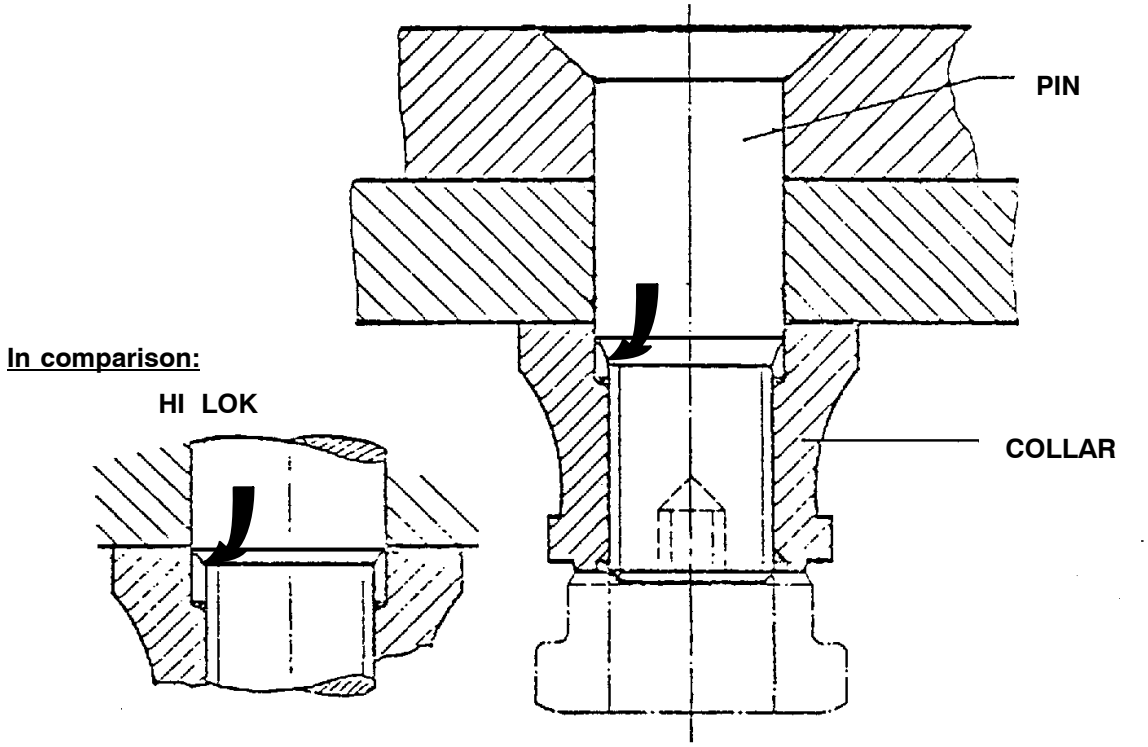

NOTES:

1. THE PIN MATERIAL IS ALLOY STEEL, AND THE FINISH IS TYPE II CADMIUM PLATING FOR ALL PINS
2. VENDOR IDENTIFICATION :
   VOI–SHAN=DEPRESSED VS IN ADDITION TO BASIC PART NUMBER.
   HI–SHEAR = DEPRESSED BASIC PART NUMBER AS SHOWN ABOVE.
3. HLT 325, 328, AND 329 ARE 180 KSI TENSION AND 108 KSI SHEAR STRENGTH.

   ALL OTHERS ARE 160 KSI TENSION AND 95 KSI SHEAR STRENGTH.

   HLT 346, 348, AND 349 ARE 220 KSI TENSION AND 132 KSI SHEAR STRENGTH.

   HLT 169 IS 140 KSI TENSION STRENGTH.

STANDARD HI LOK PINS		1/64" OVERSIZE	1/32" OVERSIZE
			
HLT 348	PROTUDING TENSION HEAD H – 11 STEEL ALLOY	HLT 448	HLT 648
			
HLT 349	100 FLUSH (AN 509) TENSION HEAD, H – 11 STEEL ALLOY	HLT 449	HLT 649

Figure 148 HI TIGUE Fastener with Flush Head

FOR TRAINING PURPOSES ONLY!

© Lufthansa Technical Training

Taper-Lok

General

A Taper-Lok fastener is a tapered bolt with a threaded end and a self-locking nut. The nut is also threaded and includes its own washer. The use of this fastener is almost the same as that of a standard nut and bolt.

Taper-Loks are used in those areas of the structure where a high fatigue performance is required. The Taper-Lok helps to achieve this performance because it has a constant interference fit in the tapered hole in the structure. This causes a good compression of the structure material around the fastener hole, and a balanced stress pattern.

An additional feature of the Taper-Lok is the good sealing effect that is given by the tapered interference fit.

The taper of the bolt, and the hole to which it is fitted, is small. It is only 6.35 mm (0.25 in) for each linear foot (12 in), a ratio of 1 in 48.

The Taper-Lok bolt is a light bolt with good strength property. Bolts are available for tension or shear uses.

Taper-Lok bolts are usually supplied with a special lubricant on them. The special lubricant must not be removed before the bolt is installed.

Before the Taper-Loks are installed in a repair, ensure that:

- They are made of the correct material
- They have the correct type of head
- They are of the correct diameter
- They are of the correct grip length
- The nuts are of the correct type.

It is very important to tightly clamp the parts together when they are prepared for the installation of Taper-Loks.

Taper-Lok bolts can be installed with hand or power tools.

It is very important to prepare the hole for a Taper-Lok to the highest possible precision. If this is not done, it could have a detrimental effect on the fatigue life of the structure.

NOTE: It is recommended that only approved operators install taper–lok bolts.

The holes for bolts with prominent roundheads need to have a chamfer.

NOTE: If a hole that has been used before is found damaged or oversize, it must be repaired to use the correct oversize bolt (Refer to SRM Chapter 51).

The data given in the head-marking table will help the operator to identify the correct bolt to fit in a hole of specified dimensions (nominal diameter and grip length).

The Taper-Loks of different nominal diameters are divided into grip-length groups. Thus bolts of the same nominal diameter can be found for use on materials of different thickness. Part numbers on the head and end of the bolt are used to identify a bolt.

FOR TRAINING PURPOSES ONLY!

© Lufthansa Technical Training

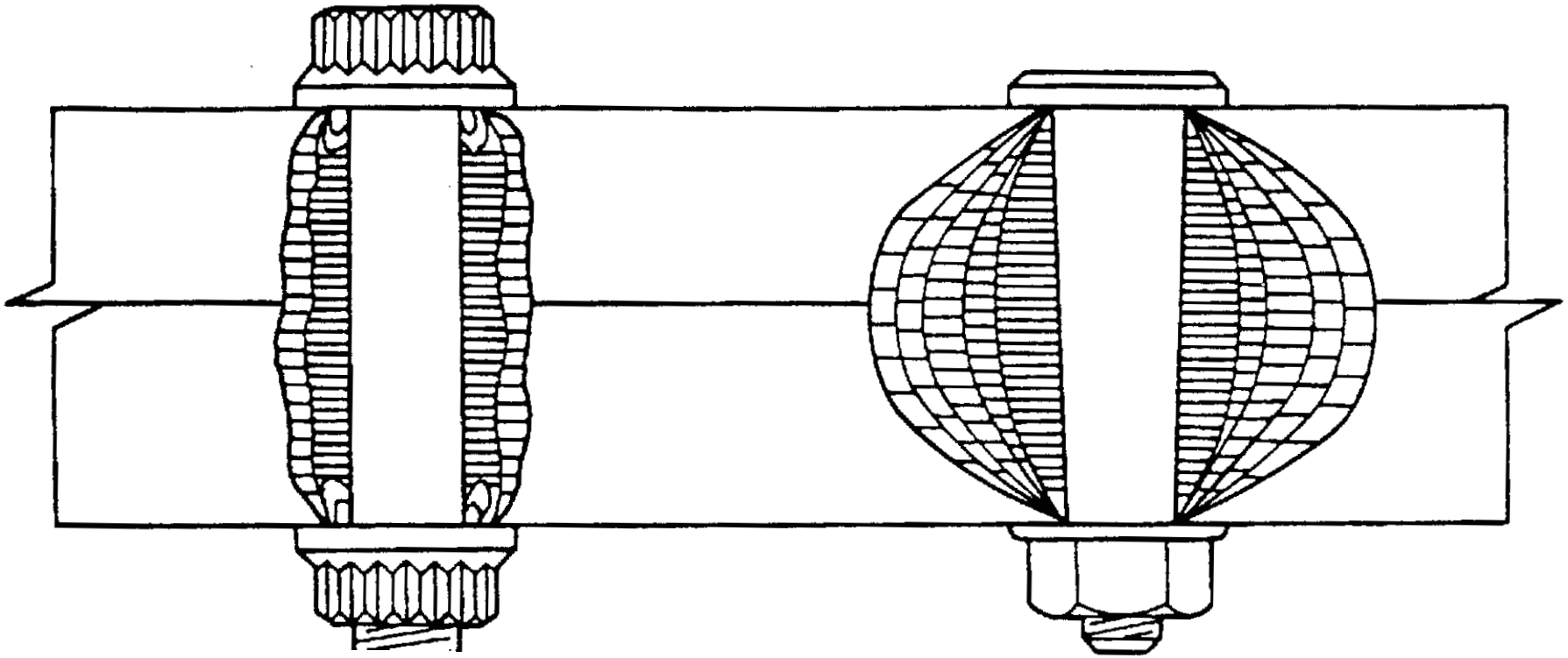

Example of the stress pattern in an assembly with a standard bolt (imbalanced stress)

Example of the stress pattern in an assembly with a Taper-Lok bolt (balanced stress)

Figure 149 Hi-Lok vs. Taper-Lok, Stress Pattern

FOR TRAINING PURPOSES ONLY!

© Lufthansa Technical Training

Taper-Lok Head Marks

Material:

H = H-11 Steel Alloy, 220 - 240 KSI
HB = H-11 Steel alloy, 240 - 260 KSI
HC = H-11 Steel Alloy, 260 - 290 KSI
CB = A-286 Heat Resistant Alloy, 110 KSI min. shear
V = 6Al4V Titanium Alloy, 95 KSI

FOR TRAINING PURPOSES ONLY!

© Lufthansa Technical Training

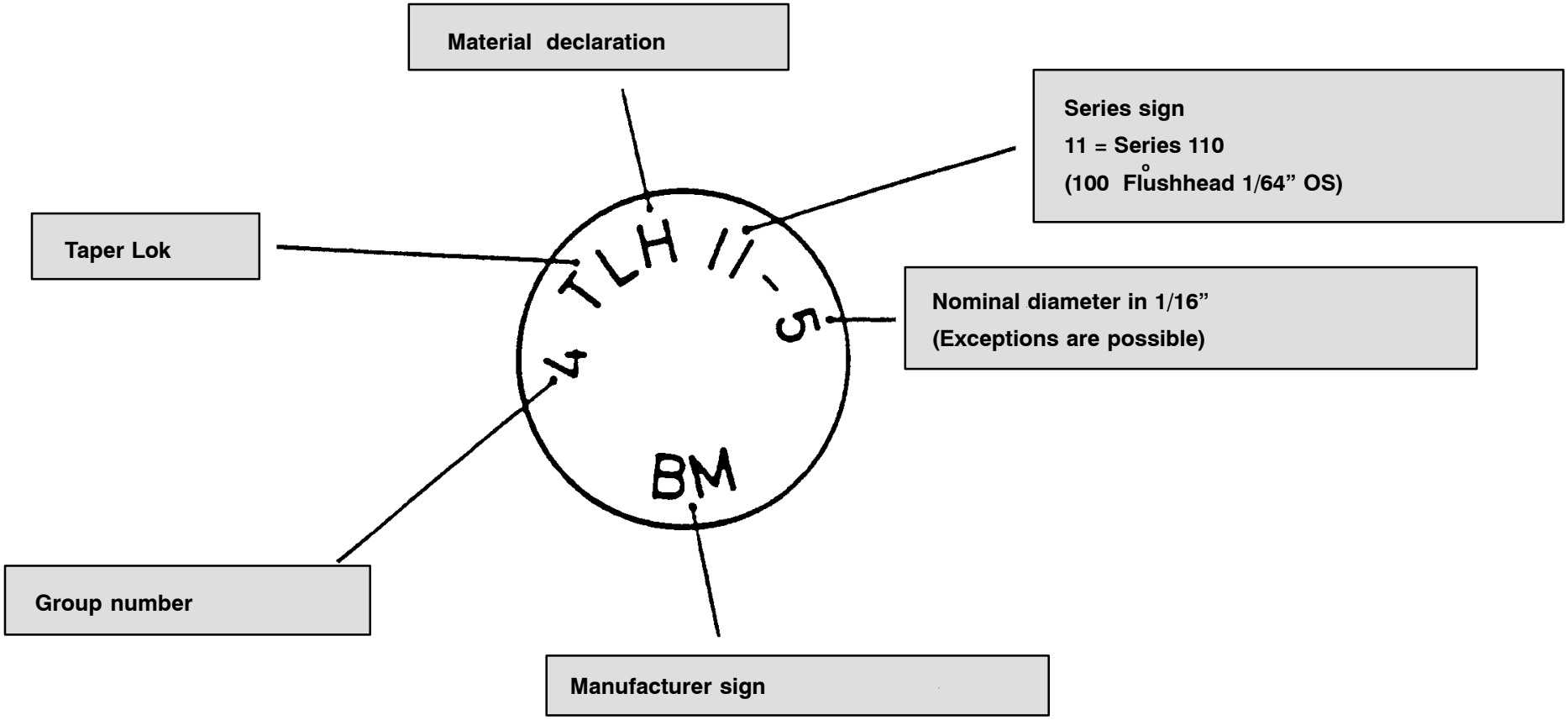

Figure 150 Head Marking (TL)

FOR TRAINING PURPOSES ONLY!

© Lufthansa Technical Training

Lockbolts

General

A Lockbolt (pin swaged) fastener is a two-piece assembly consisting of:

8. A pin with a protruding or countersink head. The shank of the pin includes grooves on to which a collar is swaged, a tension break-off groove and pull-grooves. The pull-grooves are only used for installing the pin (swaged)
9. A collar that is swaged on to the locking grooves on the pin shank to secure the pin (swaged) when it is installed.

NOTE: It is important that the collars are put on the pins with the collar facing the correct way.

- Only corrosion-resistant steel (CRES) or titanium pins are used for repair work.
- A correctly-installed Lockbolt gives a strong but light-weight fastener, and is available for tension or shear requirements.
- Pins are installed in clearance- and transition-fit holes when they are used to repair steel or titanium structure.
- Pins are installed in clearance-fit holes in structures that are a combination of aluminium alloy and steel or titanium, unless otherwise specified in a repair procedure.

NOTE: If the hole size is only given for the steel or titanium in the combination above, then the hole in the aluminium alloy part is an interference fit.

- Pins are supplied lubricated. This lubricant must not be removed before they are installed unless otherwise specified in an engineering document.
- Repair parts must be temporarily secured with grip-pins or other suitable tools before the fasteners are installed.
- When it is not possible to install a Lockbolt because of limited space a Hi-Lok (Refer to SRM chapter 51) is an acceptable alternative.
- Where Lockbolts are installed in structure with surfaces that are not parallel, the limits that follow apply:
  - for CRES tension-type pins, an angle up to 7 degrees is acceptable
  - for titanium tension-type pins, an angle up to 5 degrees is acceptable, except in the wing structure where the limit is 3 degrees
  - for aluminium tension-type pins, an angle up to 3 degrees is acceptable,.
- All cutting tools (drills, reamers and countersinks) used to prepare the hole for a pin must be in good condition, to ensure that the surface of the hole is smooth.
- Before installing pins, ensure that the pins and collars are as specified in the repair procedure.
- Collars for pins can only be swaged with a suitable power tool.
- The various manufacturers of Lockbolt pins and collars use different part-numbering methods. It is recommended that these items are stored in containers that show the applicable part number and type of item.
- The identification number for pins (swaged) and collars is given in the SRM chapter 51.
- Unless otherwise specified, pins are ‘wet-installed’ with sealant.

Before you install Lockbolt pins, ensure that the holes are clean, smooth and prepared in accordance with SRM chapter 51.

When an existing hole is damaged or oversize, install the next oversize pin.

FOR TRAINING PURPOSES ONLY!

© Lufthansa Technical Training

Tension lockbolt



Shear lockbolt



Blind lockbolt

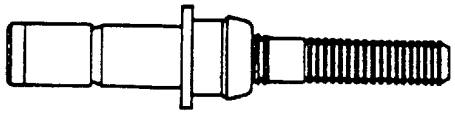

Figure 151 Lockbolts

FOR TRAINING PURPOSES ONLY!

© Lufthansa Technical Training

Installation Procedure of Lockbolts

Three different procedures are used to install Lockbolt pins. These procedures are related to the type of fit (interference, transition or clearance) that is required, and the type of structure (thick or thin) in which the pins (swaged) will be installed. The procedures are given in the SRM, chapter 51 as follows:

- Interference or transition fit in any structure
- Clearance fit in thin structure
- Clearance fit in thick structure.

FOR TRAINING PURPOSES ONLY!

© Lufthansa Technical Training

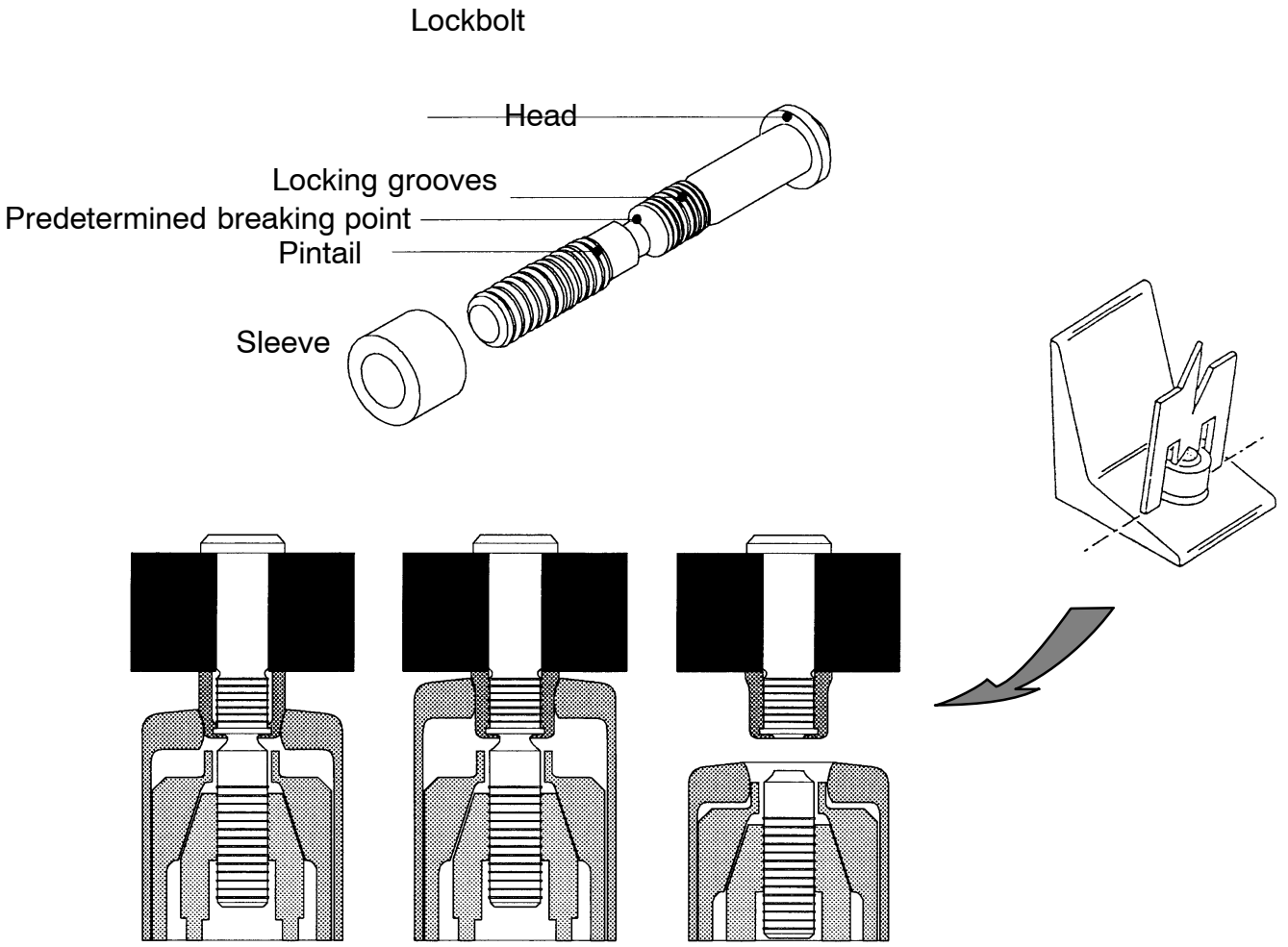

Figure 152 Installation Sequence

FOR TRAINING PURPOSES ONLY!

© Lufthansa Technical Training

Blind Rivets

Introduction

There are locations in an aircraft structure, which are very hard to reach for riveting - it is impossible to set a rivet snap at the other site of the rivet (backside not visible). For this reason fastening material has been developed, which deforms its back when a tension load applied at the front; No access to the „Blind side" is needed.

MECHANICALLY LOCKED BLIND RIVETS

Huck

In 1943 the American engineer Louis C. Huck invented the mechanically locked blind rivet (and the corresponding tool). It first was introduced for the production of the B−24 bombers.

Cherry

The Cherry Company developed its own version of a mechanically locked blind rivet, the Cherrylock. Cherry economically more successful than Huck. That is why it is likely, that you meet Cherry rivets more often.

Tools

Despite they are nearly identical in form, dimension and strength, Cherry - and Huck - rivets can only be applied with their particular tools; a Huck-rivet can not be set with a Cherry - rivet gun, and vice versa. The original Huck-rivets were set in a two step process. This required a complicated pre-working process.

Hereupon a rivet has been developed, which only needed a one step setting process. Even if the preparation of the rivet gun has been simplified, the operator has to keep in mind that two rivet types are existing, which are used in different methods. The attempt to set a one step rivet with a two step rivet gun (or the other way around) always end in a destroyed rivet. Cherry - rivets are only available in the two step version. The tool preparation is very simple.

Huck− and Cherry - rivet guns use different nozzles for different rivet diameters. For Universal− or Flushhead rivets there are also different nozzles.

FOR TRAINING PURPOSES ONLY!

© Lufthansa Technical Training

Imex Pop – rivet (flushhead)

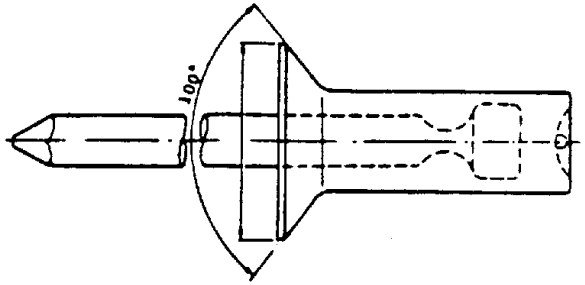

Avdel Blind rivet

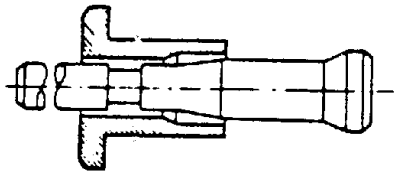

Figure 153 Blind Rivet General

FOR TRAINING PURPOSES ONLY!

© Lufthansa Technical Training

Cherrylock Blind Rivet

General

In the following text two types of blind rivets which are used for repair work on the aircraft will be described:

- Standard Cherrylock
- Cherrylock Bulbed

These blind rivets are supplied as one piece and consist of three parts:

- A tubular body that has a head at one end. Two types of head are available: a 100° countersink head and a protruding head.
- A pin that goes through the body. The pin has a head opposite the body head. It also has a lock-groove, a break-off groove and pull-grooves. There is also a driving anvil on the pin. This makes sure that the lock-collar sits correctly, and that the pin always breaks off at the break-off groove.
- A lock-collar on the pin. When the blind rivet is installed, the collar is swaged into the lock-groove on the pin and in the head. This makes sure that the pin is locked into the body.

To identify the correct blind rivet for a repair, or a replacement, refer to SRM chapter 51.

These blind rivets are supplied with a layer of lubricant on them. Do not clean them, or touch them more than is necessary, before they are installed.

Do not install blind rivets that are not in a satisfactory condition. Discard any that are not.

You can use hand or power operated tools to install blind rivets. These tools must have the correct heads attached to them.

It is recommended that you do a test procedure on some unwanted materials before you install blind rivets. Do the test on materials that are the same type and thickness as the repair materials. Use blind rivets that are the same head type, diameter and grip-length, as those for the repair.

After you have installed a blind rivet, the end of the pin can be above the rivet head. You can mill the pin until it is in line with the top of the rivet head.

Cherrylock

The standard Cherrylock rivet (or 'Wiredraw') is available in three different head types:

- Universal
- 100° Countersunk
- 100° Countersunk (shallow) (for thin-sheet applications).

Rivet diameters are nominal size, ie

- 1/8in
- 5/32in
- 3/16in

Rivet sleeves are available in four different materials:

- 5056 aluminium alloy
- 2017 aluminium alloy
- Monel
- A-286 CRES

Bulbed Cherrylock

Bulbed Cherrylock are only available in diameters 1/64in oversize from the normal nominal sizes.

Head types available are:

- Universal
- 100° Countersunk
- Unisink (a combination of countersunk and Universal)
- 156° Countersunk (for honeycomb materials)

This is very useful if rivet holes have become worn during rivet removal and gives the flexibility of fitting a larger diameter rivet without needing to open up the hole to the next nominal diameter (which may be critical in maintaining sufficient land).

Rivet sleeves are available in three different materials:

- 5056 aluminium alloy
- Monel
- Inconel 600

FOR TRAINING PURPOSES ONLY!

© Lufthansa Technical Training

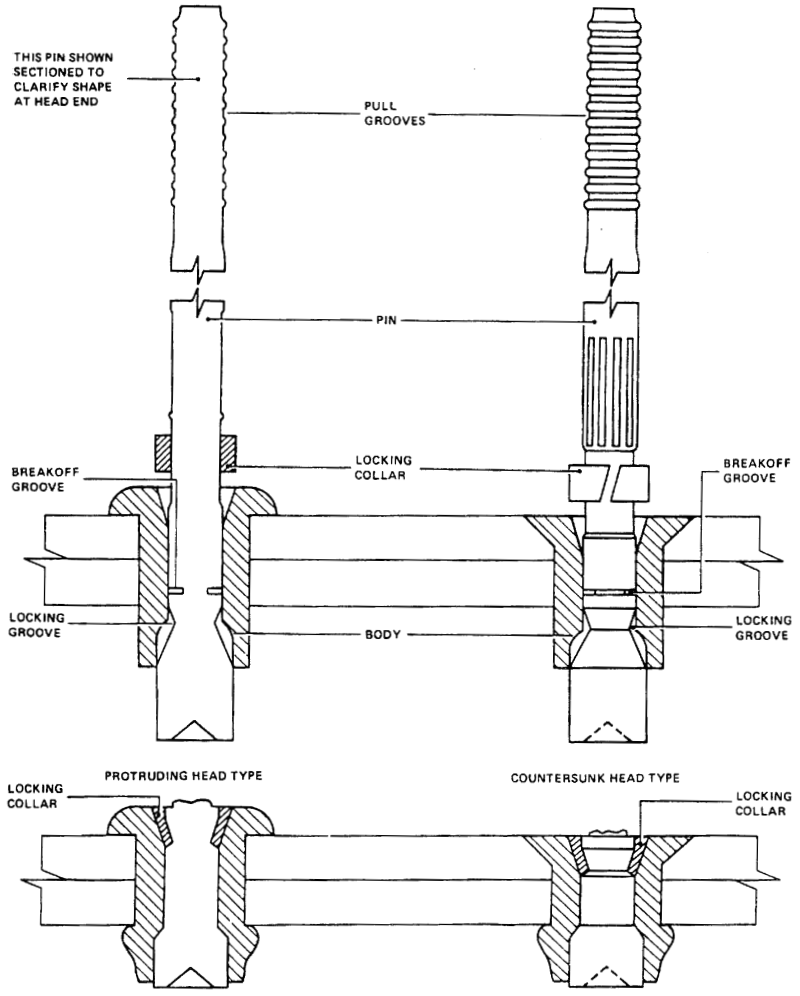

CHERRYLOCK

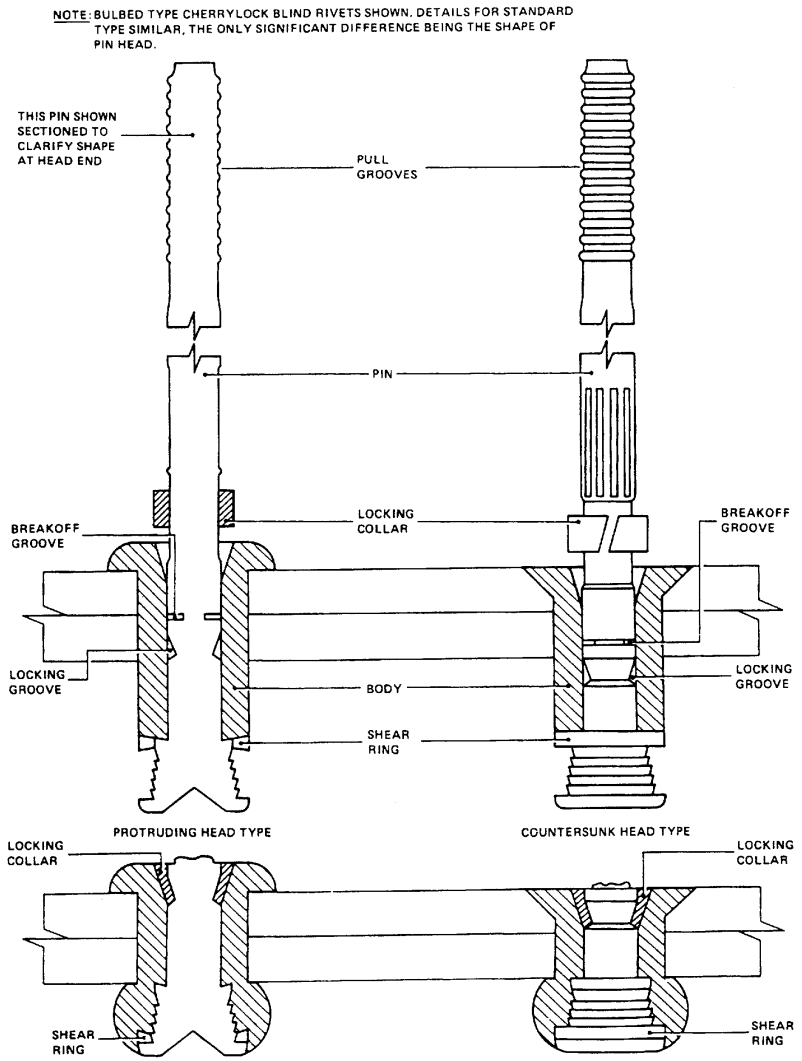

CHERRYLOCK BULBED

Figure 154 Cherrylock and Cherrylock Bulbed

FOR TRAINING PURPOSES ONLY!

© Lufthansa Technical Training

Cherrylock Bulbed - Rivet Formation

10. As the stem is pulled through the rivet sleeve, a bulb begins to form on the blind side and draws the sheets of metal together.
11. The stem swells the sleeve into the hole and the shear ring creates the bulb shape of the tail.
12. The locking collar is pushed down to mechanically lock the fastener in place and the stem shears at the break notch.

FOR TRAINING PURPOSES ONLY!

© Lufthansa Technical Training

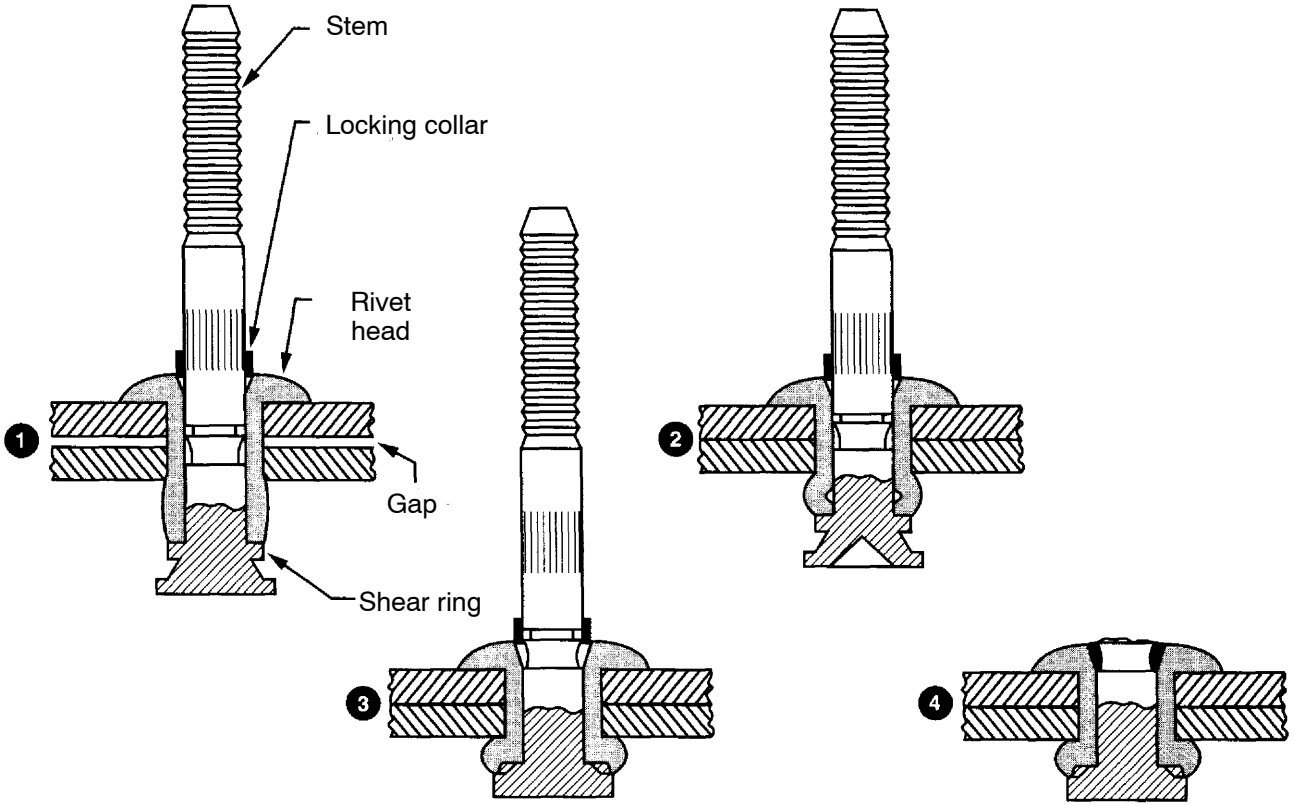

Figure 155 Cherrylock Bulbed

FOR TRAINING PURPOSES ONLY!

© Lufthansa Technical Training

Cherrymax Blind Rivet

General

A relatively recent development by Cherry is the CherryMAX rivet. Its incorporation of a sacrificial integral driving anvil means that tooling is simplified. The same operating head in the riveting gun can fit a range of different diameter rivets. The driving anvil reduces wear to the operating head of the rivet gun.

Several different types of riveting gun can be used to fit CherryMAX rivets. One in particular (the G750A) is a hand-gun that does not need a compressed air supply to operate; very useful for a 'quick-fix' in the field.

This blind rivet consists of three parts:

- A tubular body that has a head at one end. Two types of head are available: a 100° countersink head and a protruding head.
- A pin that goes through the body. The pin has a head opposite the body head. It also has a lock-groove, a break-off groove and pull-grooves. There is also a driving anvil on the pin. This makes sure that the lock-collar sits correctly, and that the pin always breaks off at the break-off groove.
- A lock-collar on the pin. When the blind rivet is installed, the collar is swaged into the lock-groove on the pin and in the head. This makes sure that the pin is locked into the body.
- The big advantage in comparison to the Cherrylock is, that with one toolflush-, halfround and blind rivets can be set.

To identify the correct blind rivet for a repair, or a replacement, refer to SRM chapter 51.

These blind rivets are supplied with a layer of lubricant on them. Do not clean them, or touch them more than is necessary, before they are installed.

Do not install blind rivets that are not in a satisfactory condition. Discard any that are not.

You can use hand or power operated tools to install blind rivets. These tools must have the correct heads attached to them.

It is recommended that you do a test procedure on some unwanted materials before you install blind rivets. Do the test on materials that are the same type and thickness as the repair materials. Use blind rivets that are the same head type, diameter and grip-length, as those for the repair.

After setting the blind rivet the shaft end can reach over the rivet head. The overhang can be filed down to the rivet head.

FOR TRAINING PURPOSES ONLY!

© Lufthansa Technical Training

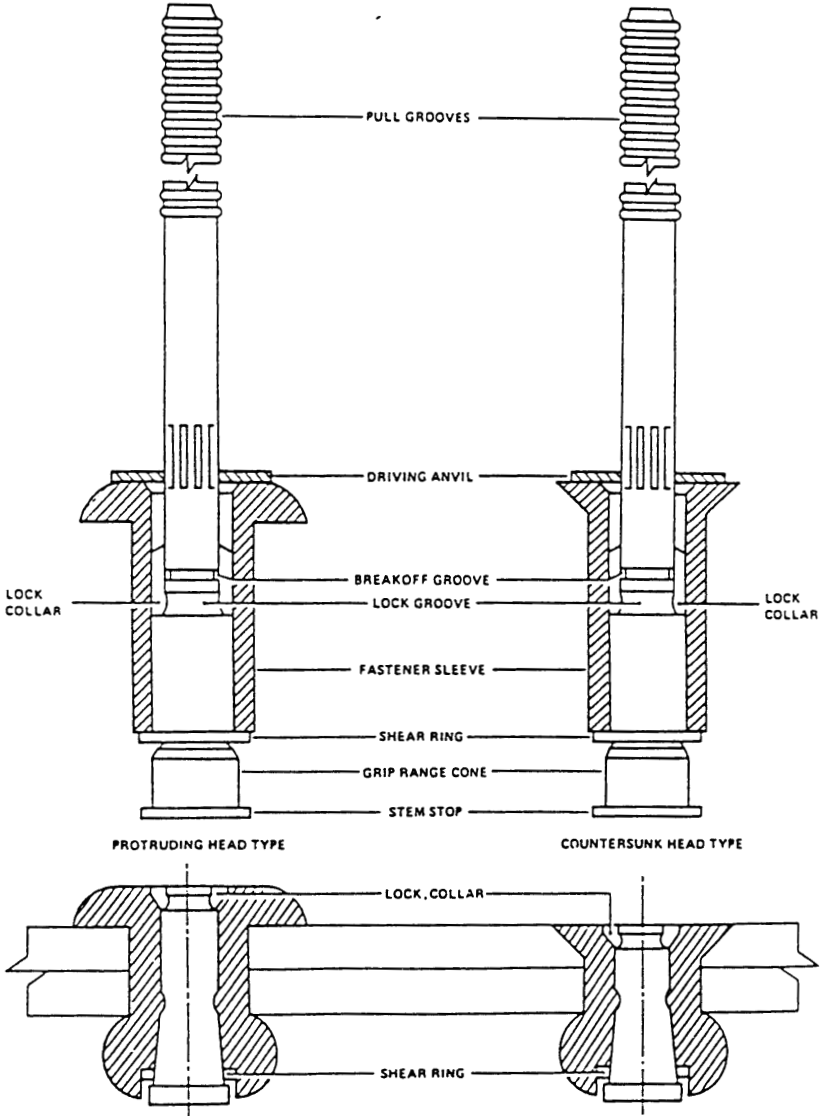

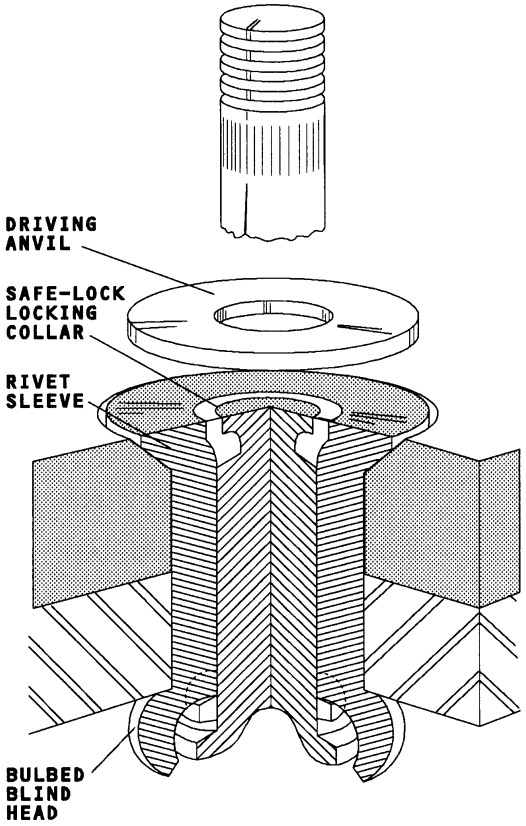

Figure 156 CherryMAX

FOR TRAINING PURPOSES ONLY!

© Lufthansa Technical Training

CherryMAX–Rivet Formation

13. As the stem is pulled through the rivet sleeve, a bulb begins to form on the blind side and draws the sheets of metal together.
14. Once the bulb is formed, the shear ring breaks at a predetermined tension and the locking collar is driven into place by the driving anvil.
15. The stem shears at the break notch and the driving anvil is discarded.

FOR TRAINING PURPOSES ONLY!

© Lufthansa Technical Training

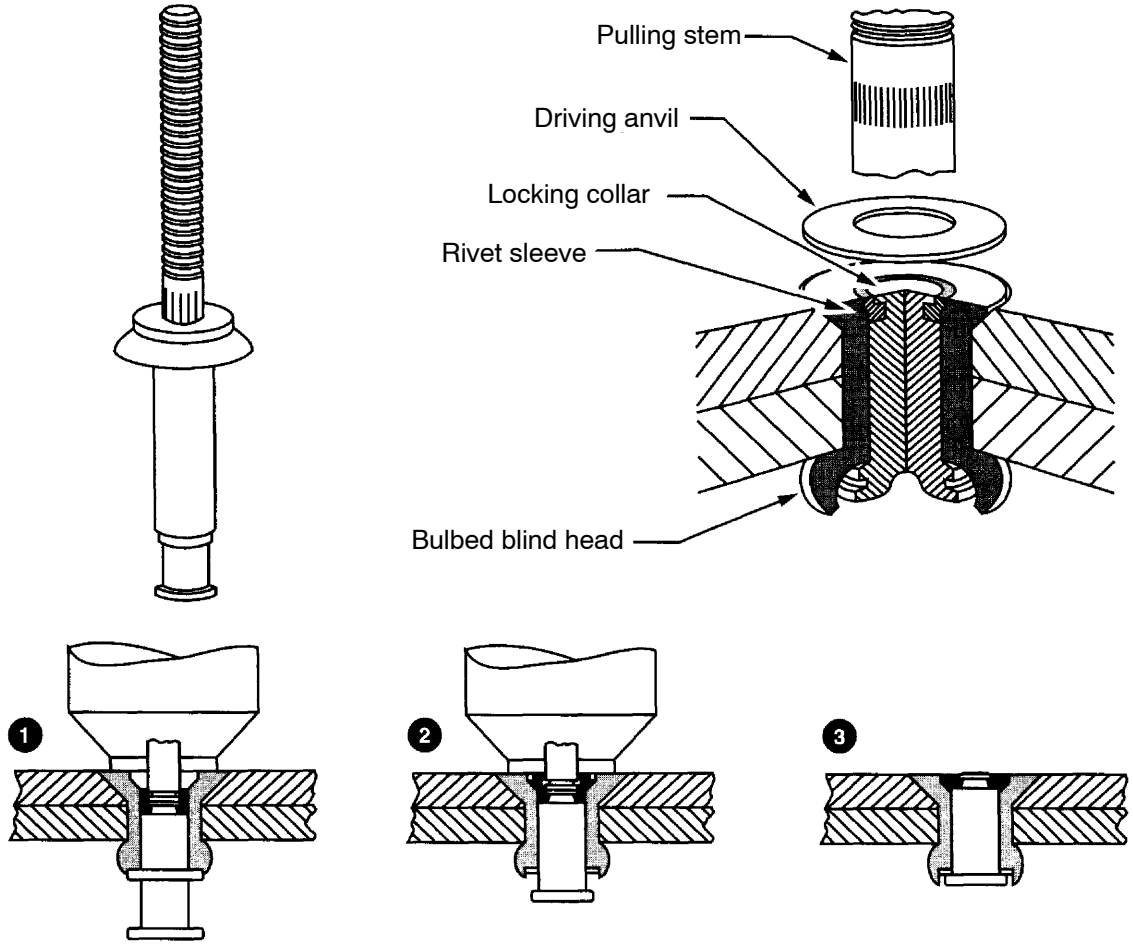

Figure 157 CherryMAX Setting Steps

FOR TRAINING PURPOSES ONLY!

© Lufthansa Technical Training

Olympic-Lok Rivets

Introduction

An Olympic-Lok rivet is a light, 3–piece mechanically-locked, blind rivet. It carries its stem lock integral to the manufactured head.

When installing, the lock-ring is pressed into a groove on the pulling stem just as the rivet completes drawing the metal sheets together.

WARNING: POST-INSTALLATION, NEVER FILE THE STEM OF AN OLYMPIC-LOK FASTENER; IT WILL WEAKEN THE MECHANICAL LOCK.

Head Styles

The Olympic-Lok is available in three head styles:

- Universal (protruding)
- 100° flush countersunk
- 100° flush shear.

Material

There are eight different alloy combinations of:

- 2017–T4
- A-286
- 5056
- Monel.

Lock spindles are made from the same material as their sleeves.

Tooling

As with Huck and Cherry blind fasteners, although almost identical in shape, size and strength to them, Olympic rivets can only be fitted with their own tooling; you cannot use a Huck or Cherry gun.

FOR TRAINING PURPOSES ONLY!

© Lufthansa Technical Training

RV 1200 Series - Protruding-Head Style
RV1201 Series - Countersunk-Head Style

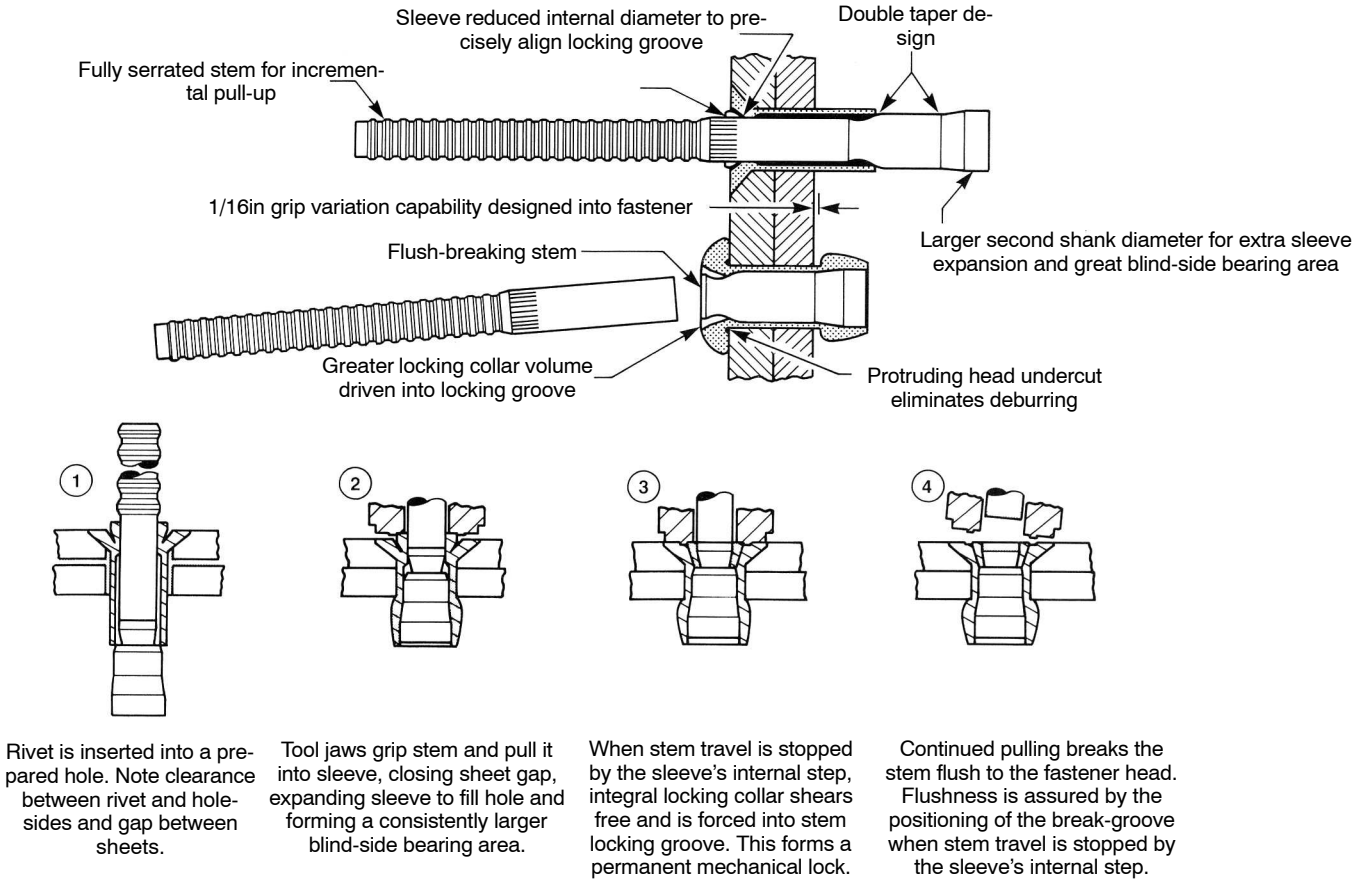

Figure 158 Olympic-Lok Rivets

FOR TRAINING PURPOSES ONLY!

© Lufthansa Technical Training

Rivnuts

Introduction

A rivnut is a combination of a rivet and a nut, resembling a hollow rivet with threads inside its shank. It is used when it is necessary to attach anything with a screw to thin sheet metal.

Fitting

A hole is drilled through the skin and the rivnut is slipped into the hole and upset with a special puller so that it grips the skin.

When the installation tool is unscrewed, it leaves the threaded receptacle in the structure.

A key on the rivnut fits into a slot cut into the edge of the hole to prevent the rivnut rotating when the screw is inserted or removed.

FOR TRAINING PURPOSES ONLY!

© Lufthansa Technical Training

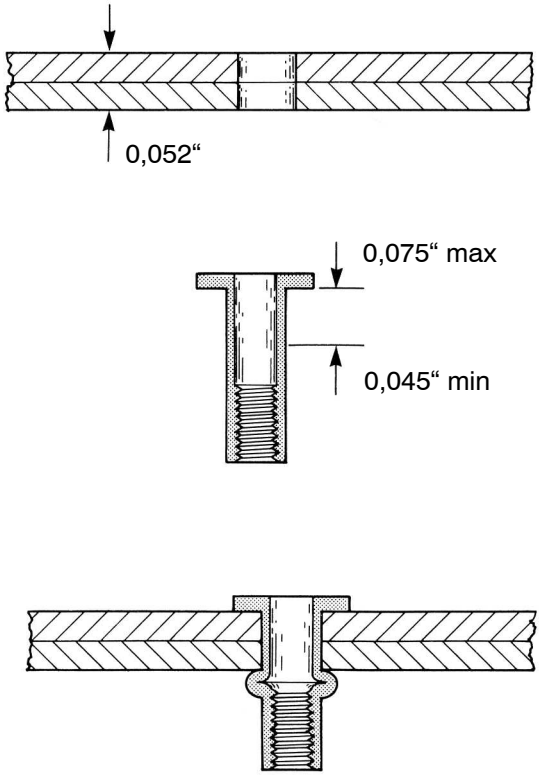

Figure 159 Riv-Nut

FOR TRAINING PURPOSES ONLY!

© Lufthansa Technical Training

JO-BOLT

General

The Jo-Bolt is a high-strength blind fastener for structural areas, when access to one side of the work is impossible but also higher loads must be carried. For example: Torsion Boxes of Door Areas Airbus A300/A310.

The Jo-Bolt consists of three factory-assembled parts:

- a nut/collar made of aluminium alloy or alloy steel
- a threaded alloy steel bolt
- a sleeve made of steel

The head styles available for the jo-bolts are the 100–degree flush head and the hexagon protuding head.

FOR TRAINING PURPOSES ONLY!

© Lufthansa Technical Training

JO BOLTS

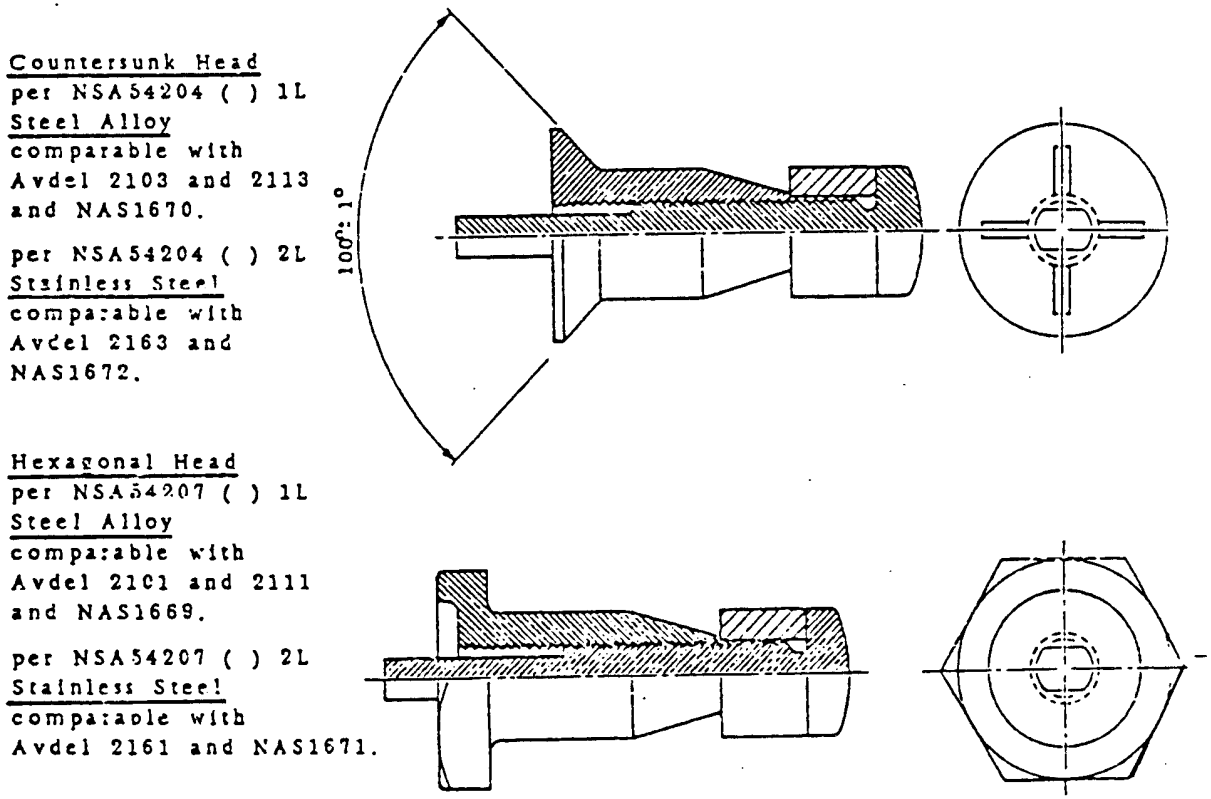

Figure 160 Jo Bolt

FOR TRAINING PURPOSES ONLY!

© Lufthansa Technical Training

THIS PAGE INTENTIONALLY LEFT BLANK

FOR TRAINING PURPOSES ONLY!

© Lufthansa Technical Training

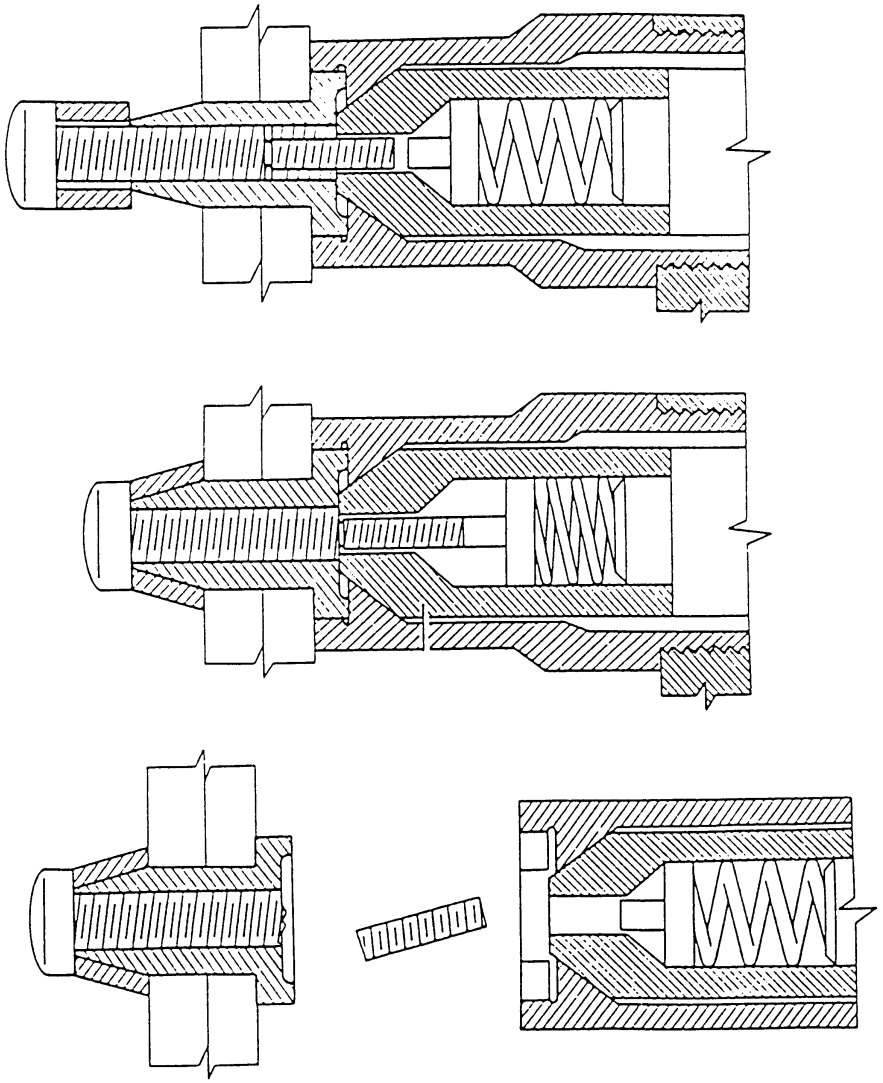

Figure 161 Jo Bolt Driving Sequence

FOR TRAINING PURPOSES ONLY!

© Lufthansa Technical Training

Determination of Rivet Length

General

When determining the length of a fastener for installation, the combined thickness of the material to be joined must be known. This measurement is known as ”grip length”.

Work Sequence

- Put the grip scale (gauge) in the hole.
- Hook the gauge on to the rear face of the material. Make sure that the materials are clamped and there is no gap.
- Read the material thickness of the material on the front face of the gauge.

A Selection of Grip Gauges from different manufacturers

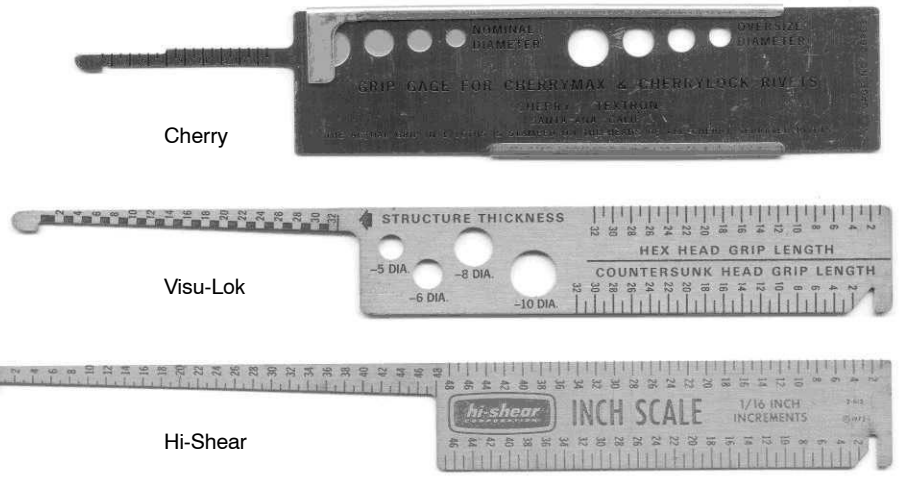

FOR TRAINING PURPOSES ONLY!

© Lufthansa Technical Training

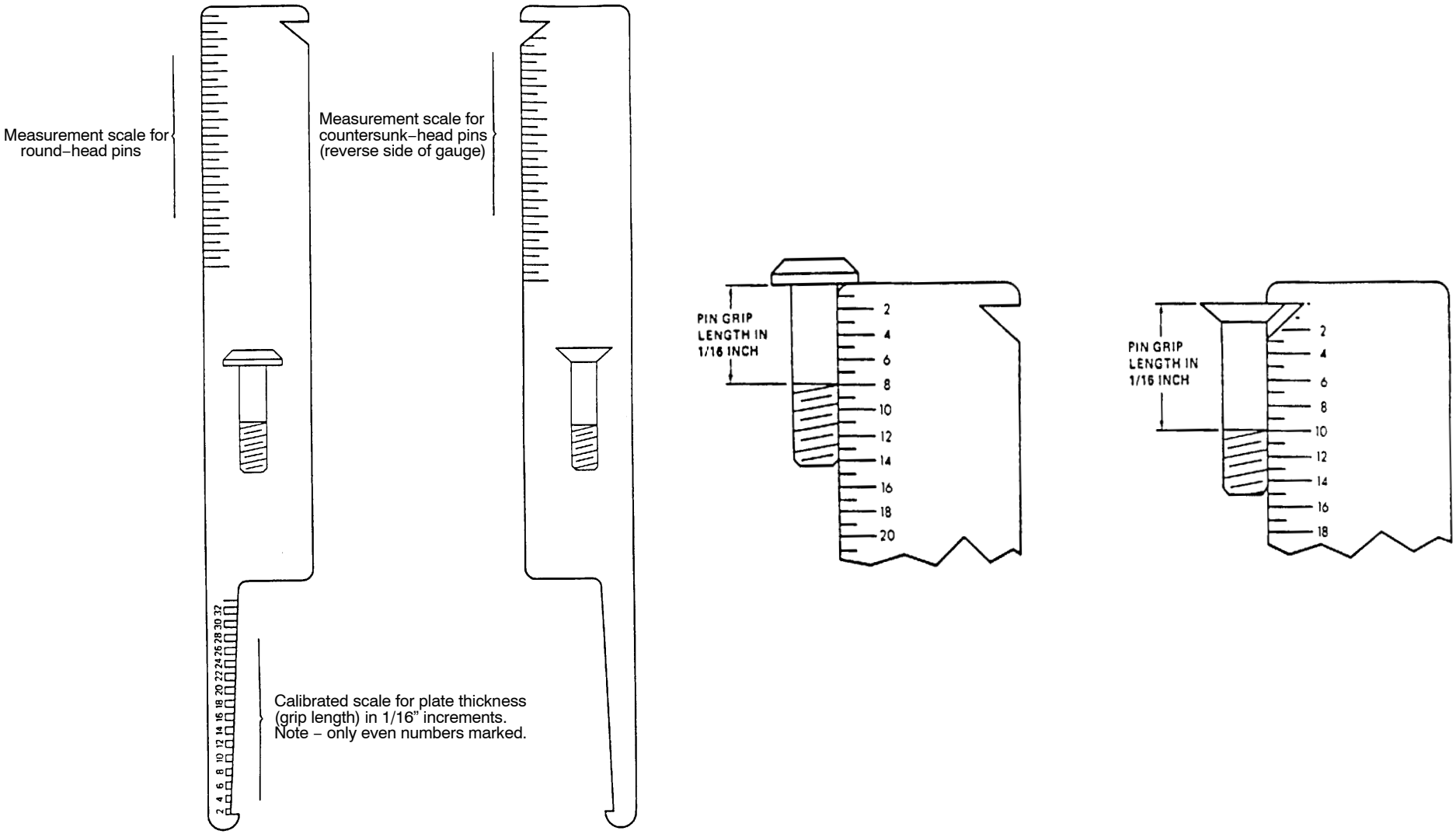

Figure 162 Hi-Lok Grip Scale

FOR TRAINING PURPOSES ONLY!

© Lufthansa Technical Training

THIS PAGE INTENTIONALLY LEFT BLANK

FOR TRAINING PURPOSES ONLY!

© Lufthansa Technical Training

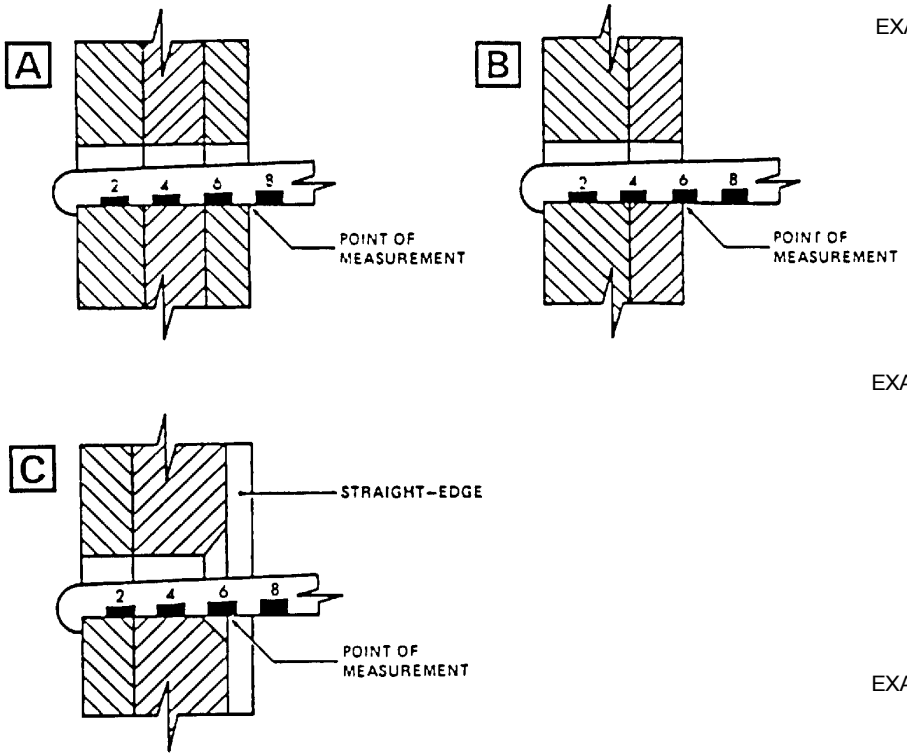

EXAMPLE A: The point of measurement is situated between the 6 and 8 graduations. Use a fastener with a grip length of 7.

EXAMPLE B: The point of measurement is opposite the 6 graduation. Use a fastener with a grip length of 6.

EXAMPLE C: The point of measurement is over a countersink. Ensure that the thickness is measured at the top of the countersink. If necessary, used a straight–edge.

NOTE If the point of measurement is on a line, use the lower figure.

Figure 163 Rivet Length Determination

FOR TRAINING PURPOSES ONLY!

© Lufthansa Technical Training

M6.6 PIPES AND UNIONS

RIGID AND FLEXIBLE PIPES, STANDARD UNIONS, IDENTIFICATION

Rigid and Flexible Pipes

Introduction

A tube assembly consists of the tube and both tube fittings. Tube assemblies are differentiated according to their use as low, medium and high pressure tube assemblies.

Lines must be able to connect to the connections exactly matching the axis and be free of tension so that they maintain the necessary seal over longer operating periods.

Working pressure general

Commonly, hydraulic systems are devided into high-, medium- and low pressure systems, depending on their intended purpose.

- At pressures of over 1500 PSI (105 bar) we speak of **high** pressure lines,
- under 1500 PSI (105 bar) **medium** pressure lines
- suction and return lines we speak of **low** pressure lines.

HP- and LP-Hydraulic Systems on Aircrafts

Hydraulic systems work with a system pressure of 3000 PSI (206 Bar).

An exception makes the A380. In order to move the large control surfaces, high forces are needed. This can be done by either increasing the tube diameter or the system pressure. So the system pressure was increased up to 5076 PSI (350 bar) due to weight saving.

The aircraft manufacturers differ between high pressure and low pressure lines:

- **HP-Tubes** are tubes with a system pressure above 1500 PSI
- **LP-Tubes** are tubes with a system pressure below 1500 PSI (in general return lines with a pressure of 50 - 70 bar)

Materials

Extruded tube material of various non-corrosive steels (CRES), aluminium and titanium alloys is available.

Steel lines are increasingly being used as pressure lines, even if this could be accomplished with aluminium lines. The reason for this is the greater operating safety and the longer life expectancy.

Medium and low pressure lines are preferably made of aluminium alloys for weight-saving.

Lines in the engine area, where there is danger of fire, and in the landing gear area, where there is danger of being hit by stones, must principally be made of steel. Titanium lines are still the exception; they can be used due to reasons of weight or as ”flexible metal pipes” instead of hoses.

Line dimensions

A tube line is built up out of a tube and two fittings. Tube sizes are given in nominal diameter (=outside diameter) and wall thickness. The determination of the diameter is made in 1/16 inch.

The higher the quality of material that is selected for a line, the easier it is to achieve the same operational pressure with reduction of the wall thickness and thus less flow resistance due to the larger inner diameter.

FOR TRAINING PURPOSES ONLY!

© Lufthansa Technical Training

NOMINAL DIAMETER		THICKNESS					
		STAINLESS STEEL 21.6.9		LIGHT ALLOY 6061.T6.		TITANIUM Ti 3AL 2.5V	
in.	mm	in.	mm	in.	mm	in.	mm
1/4	6.35	0.016	0.41	0.035	0.89	0.016	0.40
3/8	9.53	0.020	0.51	0.035	0.89	0.019	0.48
1/2	12.70	0.026	0.66	0.035	0.89	0.026	0.66
5/8	15.88	0.033	0.84	0.035	0.89	0.032	0.81
3/4	19.05	0.039	0.99	0.035	0.89	0.039	0.99
1	25.40	0.052	1.32	0.048	1.22	0.051	1.30
1.1/4	31.75	0.024	0.61				
1.1/2	38.10	0.024	0.61	0.035	0.89		

Ref. AMM A340 / ATA 20–23–00

Figure 164 Wall Thickness of Hydraulic Pipes

FOR TRAINING PURPOSES ONLY!

© Lufthansa Technical Training

Tubes and Pipes/Tube Assemblies

Introduction

Modern aircraft normally have three independently working hydraulic systems. Exceptions are the B747 (4 main hydraulic systems) and the A380 (2 main hydraulic systems + several electro-hydraulic control units). They are identified as the green, blue and yellow hydraulic system and provide hydraulic power to e.g. control surfaces, cargo doors, landing gear, brakes and thrust reverser. Systems, which are not used during flight, are separated by check valves from the main system due to safety reasons (e.g cargo doors and thrust reverser).

Routing

Hydraulic tubes are installed with a distance between them, if it is possible. This has safety reasons and is made to minimize the danger of a loss of all three systems due to a tyre or engine damage. Generally hydraulic tubes are routed outside the cabin and cockpit.

Tube Material

Seamless tubes out of corrosion resistant steel (CRES), titan or aluminium alloys are used for hydraulic systems. In the A320 for example high pressure tubes in **non**-fire-danger zones are made out of titan alloys. Tubes in fire-danger zones are made out of CRES. Aluminium alloys are used for low pressure tubes. In special zones, like e.g. the landing gear bay, the low pressure tubes are made out of CRES or titan alloys. Zones in which movements between two parts do occur, so called flexible pipes are used.

FOR TRAINING PURPOSES ONLY!

© Lufthansa Technical Training

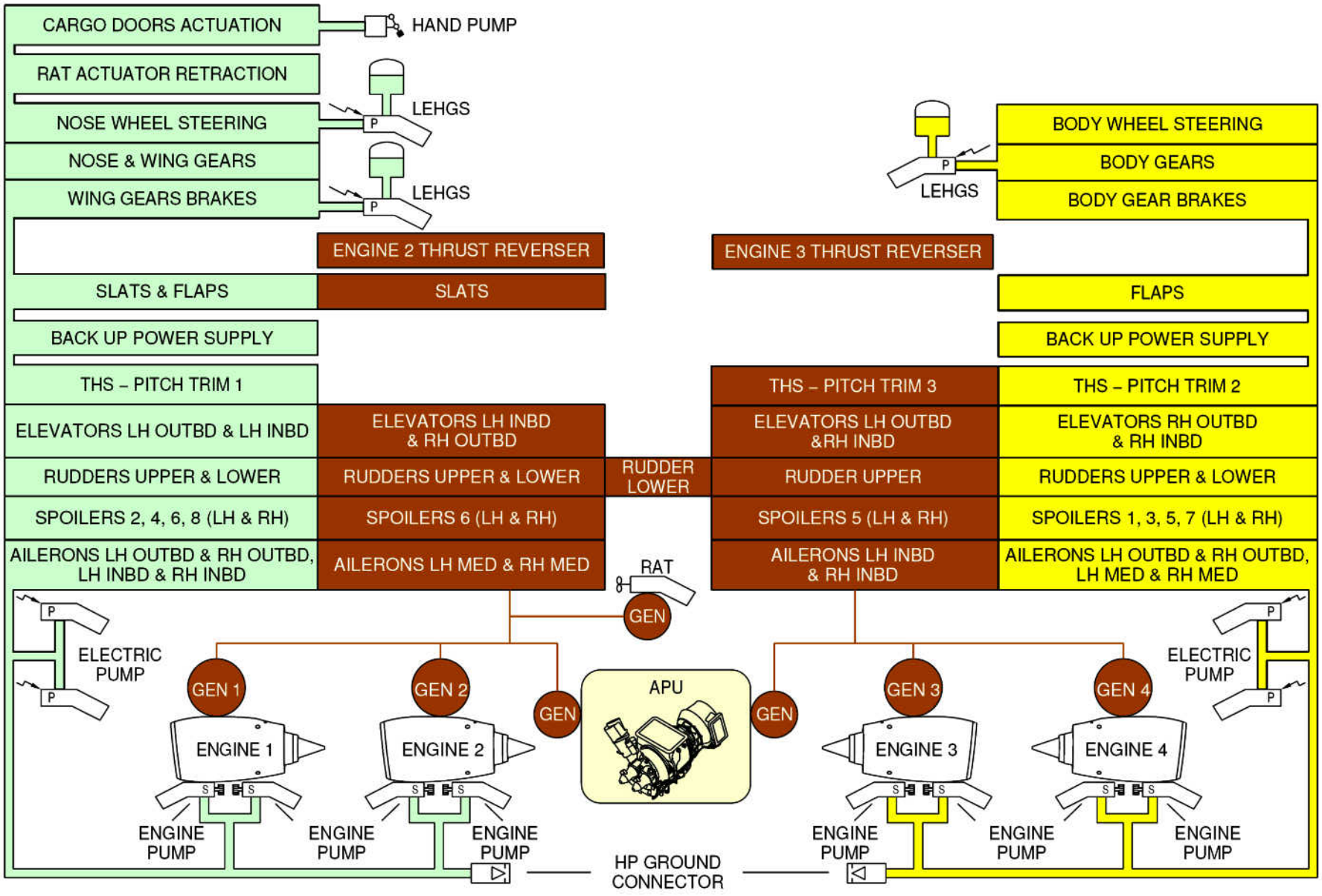

Figure 165 A380 Main Hydraulic Architectur

FOR TRAINING PURPOSES ONLY!

© Lufthansa Technical Training

Tube Fittings

General

Tube fittings or tube connections form the transition to the fittings on the units, branches or to other tubes.

In this way they must fit to the various types of tubing and nominal diameters on the one side and to the various threads and fittings (flared or ball–bush fittings) on the other side.

Materials

There are tube fittings for the various pressure ranges in aluminium and titanium alloys respectively and in cadmium-plated or stainless steel versions.

FOR TRAINING PURPOSES ONLY!

© Lufthansa Technical Training

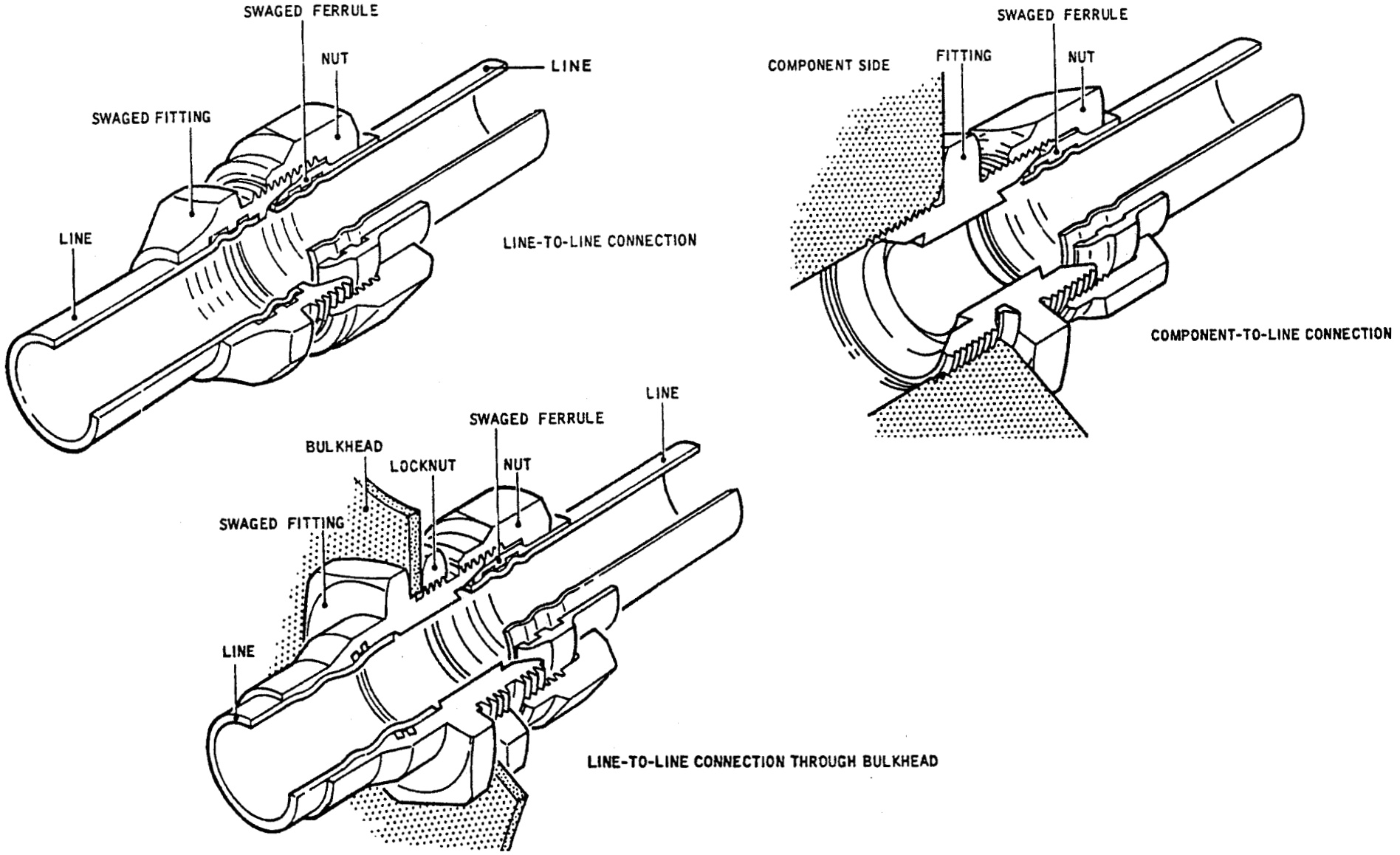

Figure 166 Connection Examples

FOR TRAINING PURPOSES ONLY!

© Lufthansa Technical Training

Flareless Fittings

MS Fitting (MS = Military Specification)

General

The MS-Fitting consists of a fittig, a sleeve and a union nut.

For tubing repairs this type of connection is often used, but some aircraft manufacturers allow these repairs only temporarily. The MS-connection is suitable for all types of media (e.g. oil, fuel, water and air).

Insallation

The sleeve or O−ring of malleable steel is shaped by pre-stressing in such a way that its inner cutting edge is pushed over the pipe to seal it.

At the same time the lip of the seal is pushed into the cone of the fitting and forms a seal line.

During this the tube must, in principle, be on the stop support.

Advantages/disadvantages

The advantage oh these MS-Fitting is, that no special tools are necessary for the installation.

FOR TRAINING PURPOSES ONLY!

© Lufthansa Technical Training

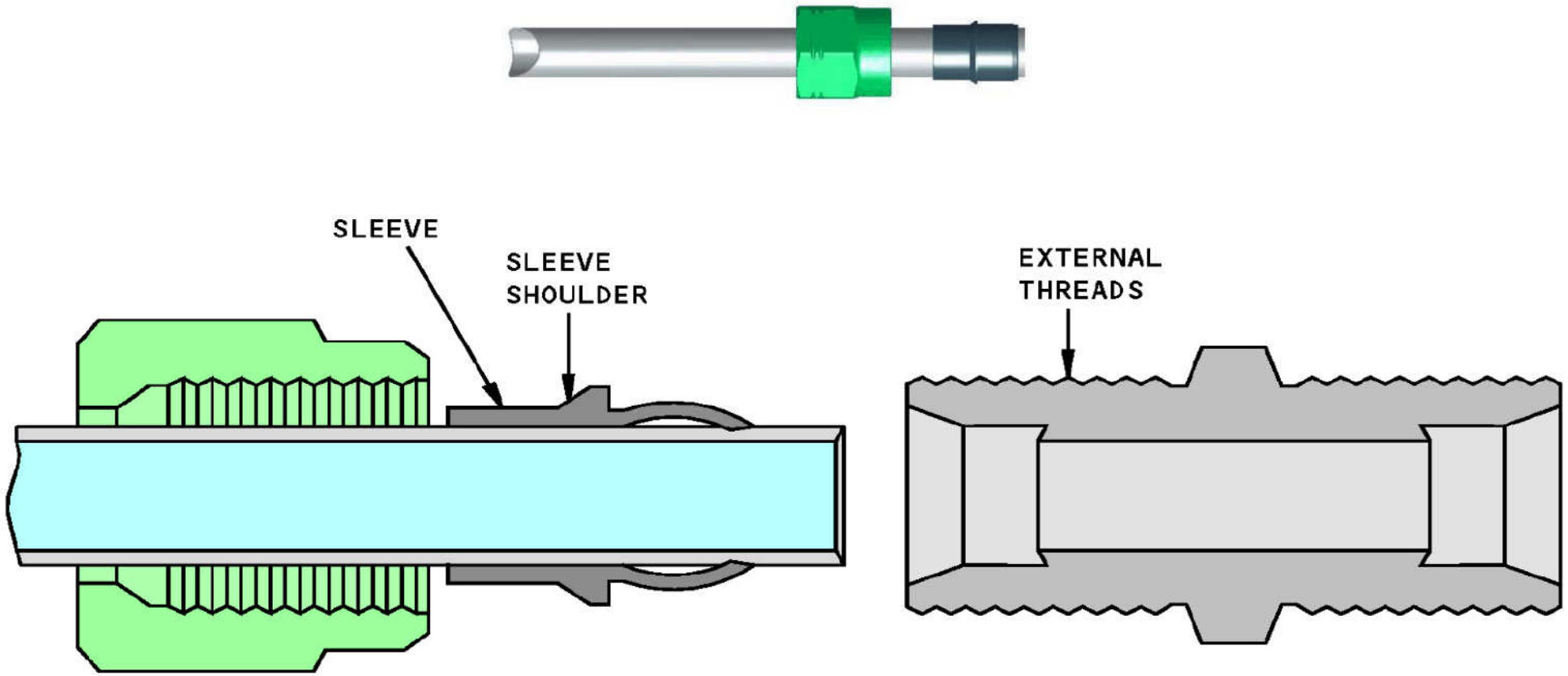

Figure 167 MS Fitting

FOR TRAINING PURPOSES ONLY!

© Lufthansa Technical Training

SWAGE FITTING/HARRISON - TYPE

General

There are two types of Harrision-Type-Fittings, which are manufactured from aluminium, CRES or titanium, depending on the hydraulic system.

The Harrison connection is a further development of the MS−connection and is therefore suitable for all types of media.

By using these types of fittings, sealing pressures up to 5000 PSI can be attained.

Non-permanent Harrison-Fitting (Internal Swaged)

For this type of connection, you also need a special tool, which moulds a sleeve by widening the pipe. The tool can be compared to a thorn that expands in the tube by a mechanical process.

The sleeve of solid steel has a ball−bush fitting as a seal and is not moulded. The tube is moulded, in that it is swaged in the sleeve from inside so that it is sealed tightly.

With this type of fitting, the tube is not allowed to touch the end of the fitting.

Advantages/disadvantages

This type of connection is well suited for thin-walled tubes and is almost totally vibration-resistant.

Permanent Sierracin-Harrison-Fitting (External Swaged)

The Sierracin-Harrison-System uses a fitting, which is swaged from outside by a special tool, so that shaped fittings can be installed.

FOR TRAINING PURPOSES ONLY!

© Lufthansa Technical Training

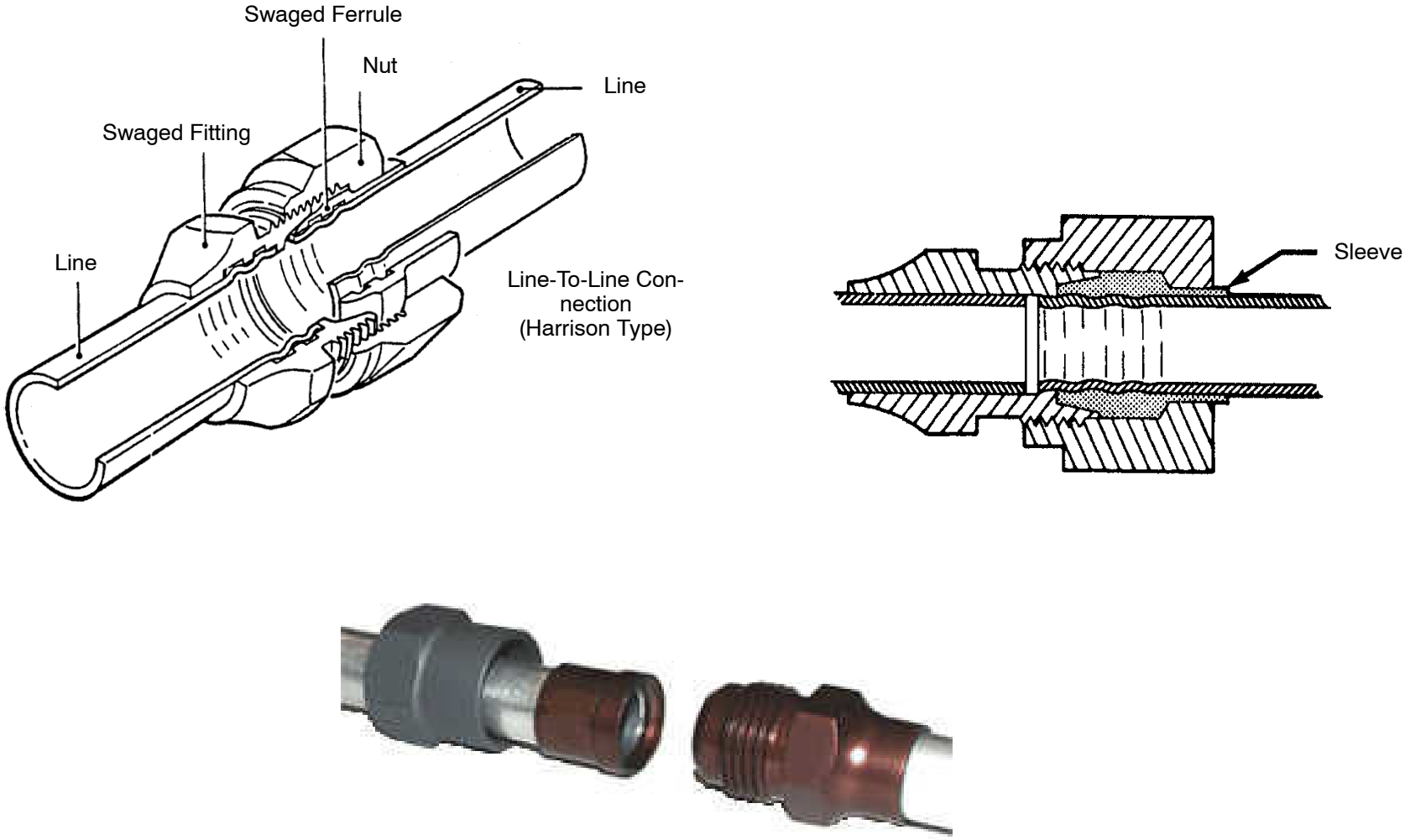

Figure 168 Nonpermanent Harrison-Type Fitting

FOR TRAINING PURPOSES ONLY!

© Lufthansa Technical Training

PERMASWAGE FITTING

General

With this type of connection, the sleeve is squeezed (360°) onto the prepared pipe end with a special hydraulically driven tool.

The fittings can be manufactured from6061–T6, CRES or titanium. By squeezing the fittings, a very reliably metal-to-metal connection will be achieved.

In addition, all standard-fittings are provided with a Back-Up-Seal made from silicone.

The standard-fittings made from 6061–T6 are designed for working pressure up to 1500 PSI, CRES up to 3000 PSI and titanium up to 4000 PSI.

The „burst-pressure-values“ amounts four times the working pressure.

This type of connection is used in aircraft production and for repairs of hydraulic and water pipes. This system is not applicable to oxygen and fuel lines. Because of the silicone seals the Permaswage connection is not applicable to hot sections of the engine or APU either.

Advantages/disadvantages

The advantage of this type of fitting is that is can be made quickly in situ, it is light, and gives a good seal.

The great disadvantage of this fitting is that is cannot be separated, which can be very problematic at disassembly.

NOTE: Due to the silicone-seals, permaswege-fittings must not be used in oxygen-systems, fire-endangered areas of engines and APU’s.

FOR TRAINING PURPOSES ONLY!

© Lufthansa Technical Training



Tee Permaswage Fitting



Straight Permaswage Fitting



End Permaswage Fitting

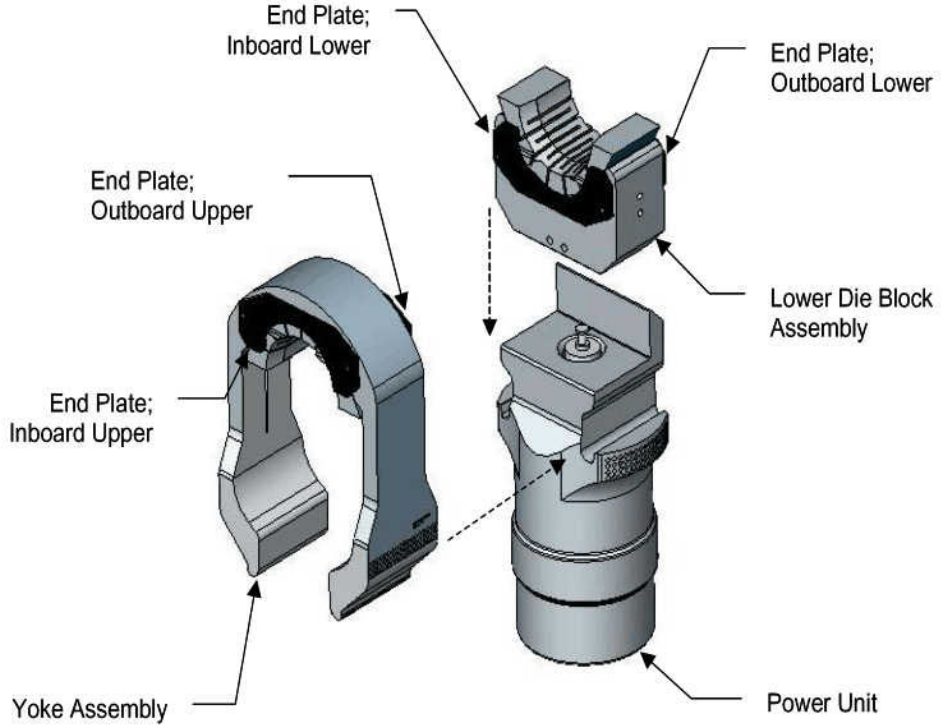

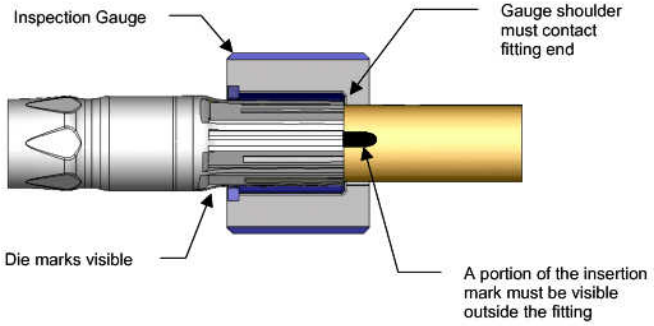

Figure 169 Permaswage Fitting

FOR TRAINING PURPOSES ONLY!

© Lufthansa Technical Training

Flare-Type Fitting

General

With a flare-type fitting a special tool is required to make the flare.

This so–called AN–connection is mainly used for the engines and is suitable for all media (oil, fuel and pneumatic) present there.

Installation

By tightening the union nut, a sleeve is pulled against a conical fitting, whereby the tube is pressed between the fitting and the sleeve.

The close fit between the inside of the flared tube and the flare cone of the fitting provides the actual seal, therefore surfaces must be scrupulously clean and free of cracks, scratches and nicks etc.

Advantages/disadvantages

The sleeve provides added strength and supports the tube to prevent vibration concentrating on the flare.

This fitting is relatively complicated to manufacture, but has proved its worth for use in engines because it is relatively vibration-resistant.

Flare Angle

Aircraft flared fittings have a standard flare angle of 37° and are not interchangeable with vehicle-type flares, which are 45°.

FOR TRAINING PURPOSES ONLY!

© Lufthansa Technical Training

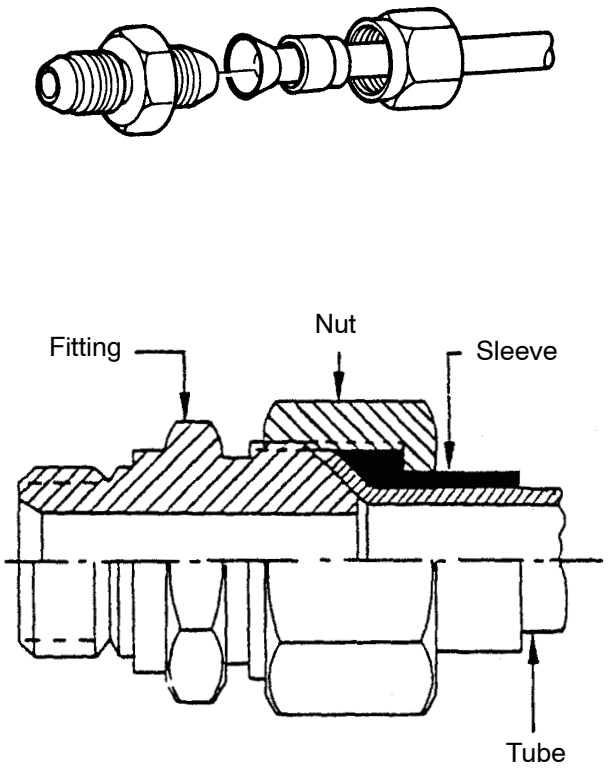

Figure 170 Flare Fittings

FOR TRAINING PURPOSES ONLY!

© Lufthansa Technical Training

FLARED FITTINGS

General

Flared fitting part numbers are either 'AN' or 'MS'. Some older types ('AC') still exist.

NOTE: It is important to be aware of this and note that there are a number of physical differences that mean they are NOT interchangeable.

FOR TRAINING PURPOSES ONLY!

© Lufthansa Technical Training

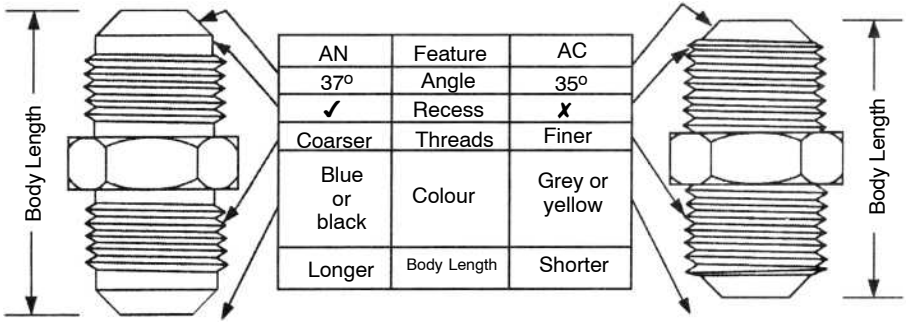

AN	Feature	AC
37°	Angle	35°
✓	Recess	✗
Coarser	Threads	Finer
Blue or black	Colour	Grey or yellow
Longer	Body Length	Shorter

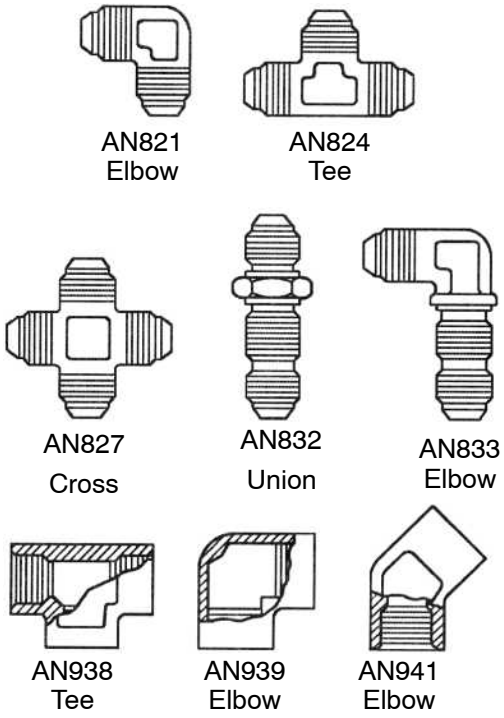

Common Aircraft Pipe Fittings

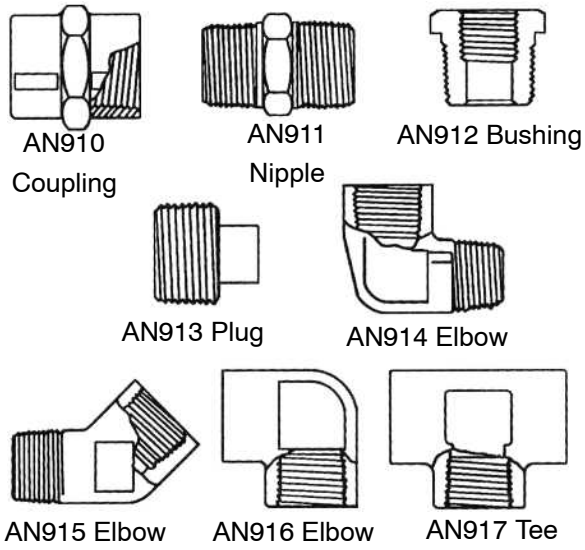

Tapered Pipe Thread Fittings

Figure 171 Flared Fitting Types

FOR TRAINING PURPOSES ONLY!

© Lufthansa Technical Training

V-Band Clamps

General

V-Band clamps are designed to provide pressure tight demountable connections for pipes and ducts. These Clamps are used, for example, to join pneumatic, air conditioning and ice protection pipes/ducts with flanges.

Installation

Examine the flanges for damage and contamination.

The pipes/ducts must be correctly aligned.

Then position the clamps on the flanges.

Tighten the nut to the specified torque value and bed down parts by softly tapping the clamp with a plastic hammer.

Tighten the nut again to the specified torque value.

FOR TRAINING PURPOSES ONLY!

© Lufthansa Technical Training

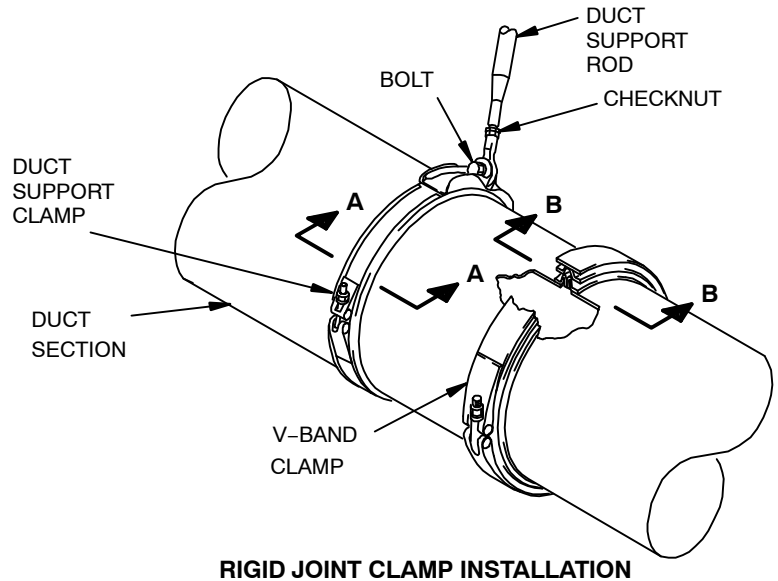

RIGID JOINT CLAMP INSTALLATION (EXAMPLE)

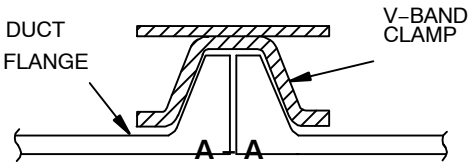

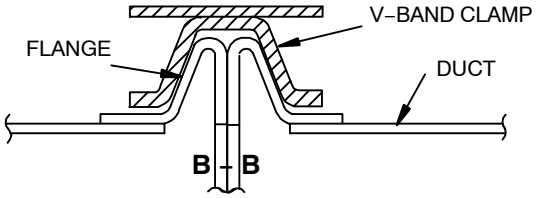

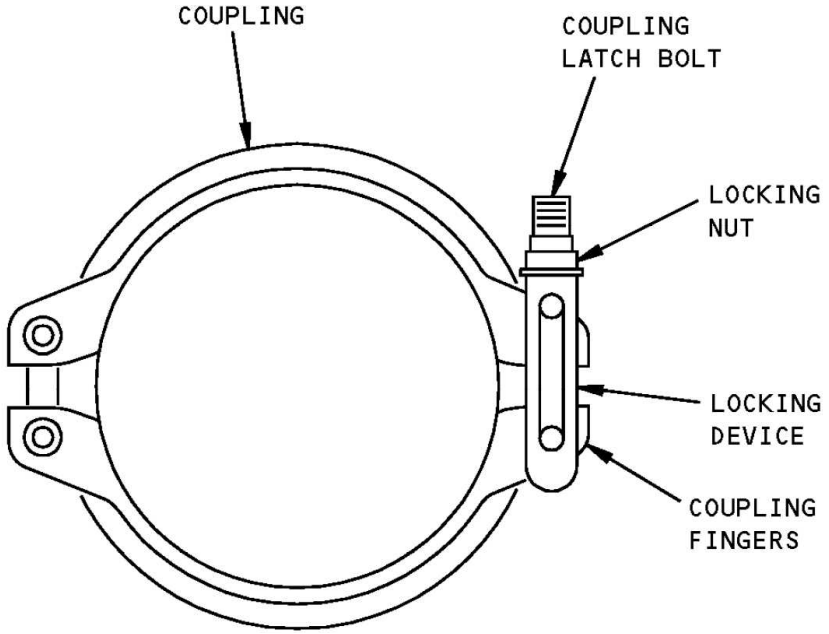

Figure 172 Duct Clamps

FOR TRAINING PURPOSES ONLY!

© Lufthansa Technical Training

Hoses

General

Flexible hoses are used extensively on aircraft to connect stationary to moving parts and in areas of high vibration.

Hoses (including fittings) are produced mainly by a manufacturer. It is unusual to fabricate hose assemblies.

Fitted hoses must meet the following requirements:

- There must be a certain amount of slack between both fittings because hoses reduce their length by between 2% and 4% and expand in diameter when under pressure.

  Tensile stress on the fittings is unsafe and therefore not permitted.
- They must not twist when the end-fittings are tightened.

  Twisted hoses have a shortened life and can be damaged or buckle when there is movement. End-fittings can loosen off.

The inner diameter of hoses is usually given in1/16 inch.

Working pressure

There are essentially three types of hose ratings:

- Low pressure: up to 600 pounds per square inch (psi)
- Medium pressure: up to 3000 psi
- High pressure: 3000 psi +

Tube diameters

The inner diameter of hoses is usually given in1/16 inch.

Lay Lines

Lay lines run along the length of a hose. They are yellow, red or white stripes, incorporating MIL-SPEC numbers and various other manufacturers' information.

Besides identifying the hose, it serves to indicate whether the assembly is twisted when installed.

Construction

Hoses are built up from layers and consists from inside to otside out of the inner layer, the reinforcement layer and the outer cover.

Inner layer

The inner layer carries the fluid and therefore must be compatible (chemically) with the fluid being transported and have plain surface.

The four main compounds used to construct inner liners are:

- Neoprene (for petroleum-based fluids)
- Buna-N (better suited for petroleum-based fluids)
- Butyl (phosphate ester-base hydraulic fluid (Skydrol)
- Teflon (compatible with almost every fluid carried).

Reinforcement layers

Reinforcement layers cover the inner liner and determine the hose's strength.

Common materials used for reinforcement layers are:

- cotton
- rayon
- polyester fabric
- carbon steel wire braid
- stainless steel wire braid.

Diligent design of reinforcement layers can minimise the dimensional changes of hoses under pressure.

Outer cover

The protective **outer cover** is usually made of rubber-impregnated fabric or stainless steel braid. It is put over the reinforcement to protect from physical damage or heat.

FOR TRAINING PURPOSES ONLY!

© Lufthansa Technical Training

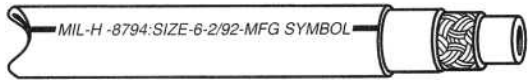

A lay-line is a visual indicator for twisting



Low pressure



Medium pressure



High pressure

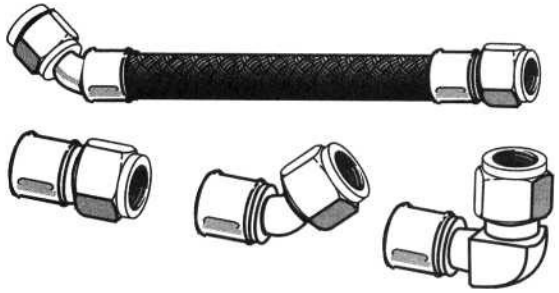

Swaged fittings require special machinery
to assemble and cannot be reused.

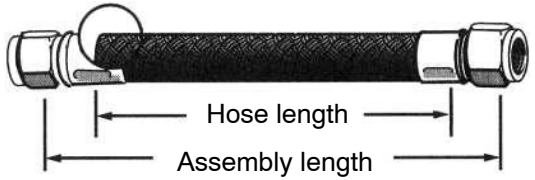

Figure 173 Hoses

FOR TRAINING PURPOSES ONLY!

© Lufthansa Technical Training

M6.7 SPRINGS

TYPES OF SPRINGS, MATERIALS,CHARACTERISTICS AND APPLICATION

Springs

Introduction

A spring is an engineering component which when deflected by a force tends to return to its unloaded shape. Ideally the energy input to cause the deflection is usefully recovered.

Springs are used extensively throughout mechanical engineering in a number of forms:

- **Metal Springs**
  - Helical Compression Springs
  - Helical Extension Springs
  - Helical Torsion Springs
  - Coil Springs
  - Disc Springs
  - Leaf Springs
  - Spiral Springs
- **Other Spring Types**
  - Air Springs
  - Elastomer Springs

Metal springs generally fall into one of three classes of duty:

- **High Duty** Springs subject to rapidly reciprocating loads e.g. engine valve springs**.**
- **General Duty** Springs that work infrequently for limited periods.
- **Static Load Springs** Springs that are used to apply a fixed load throughout their life.

Compression Springs

Compression springs are open−coiled helical springs that work by resisting compressive force. These springs are manufactured in cylindrical, conical, concave (hourglass), convex (barrel) or any shape to suit an application and are typically made with round wire

Closed ends are preferable because they allow a greater degree of squareness and prevent tangling. Grinding the ends permits greater squareness control and inhibits buckling.

Extension Springs

Extension springs work by their initial tension resisting the pulling force to which their ends are attached. Extension springs use various types of ends, including eyes, loops, hooks, and others. The path of wire from the body of the spring to its ends should be as smooth, gradual and seamless as possible to maximize the life of the spring. The most common extension spring material is round wire.

Torsion Springs

Torsion springs work by resisting externally applied torque. Friction and arm deflection affect torque. Torsion springs are most effective when supported over a rod or tube. Double torsion springs consist of one right−hand and one left−hand coil section connected to each other and working in parallel. Torsion springs are most commonly manufactured from round wire.

Wireform Springs

Wire forms can produce tensional and torsional movement. They are used in a diverse range of applications including:

- Baggage label clips
- Electrical switchgear
- Light fittings
- Hooks
- Textile machinery
- Safety equipment.

FOR TRAINING PURPOSES ONLY!

© Lufthansa Technical Training

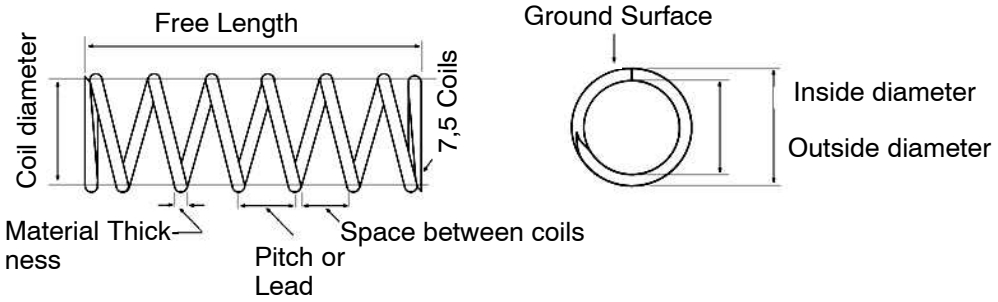

Compression Spring

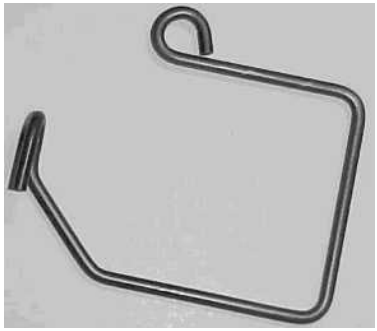

Wireform Spring

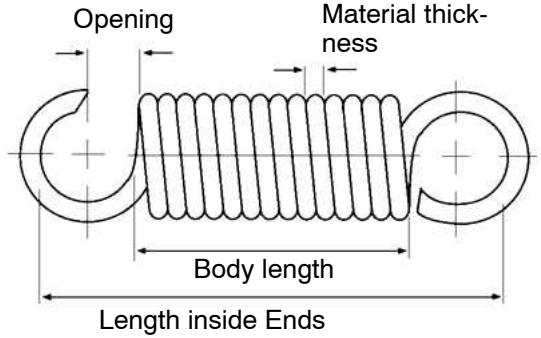

Extension Spring

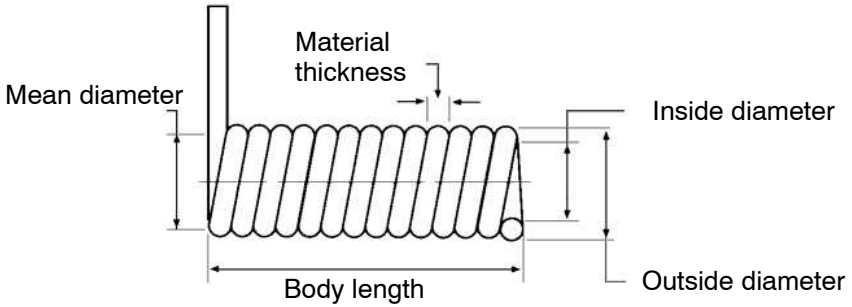

Torsion Spring

Figure 174 Common Spring Types

FOR TRAINING PURPOSES ONLY!

© Lufthansa Technical Training

Properties of Common Spring Materials

High–Carbon Spring Wire

High–carbon spring steels are the most commonly used of all springs materials. They are least expensive, readily available, easily worked and most popular.

These materials are not satisfactory for high or low temperatures or for shock or impact loading.

Alloy Steel Wire

The alloy spring steels are used in applications involving high stress and where shock or impact loading occurs. Alloy spring steels also can withstand higher and lower temperatures than the high–carbon steels.

Stainless Steel Wire

The use of stainless spring steels has increased considerably in recent years. Several new compositions are now available to withstand corrosion. All of these materials can be used for high temperatures up to 343°C (650°F).

Non–Ferrous Alloy Wire

Non-Ferrous alloys are important spring materials because of their good electrical properties combined with their excellent resistance to corrosion. Although these materials are more expensive than the high–carbon and the alloy steels, they nevertheless are frequently used in electrical components and in sub-zero temperatures.

High–Temperature Alloy Wire

Nickel–based alloys are especially useful spring materials to combat corrosion and to withstand both elevated and below–zero temperature application. Their nonmagnetic characteristic is important for such devices as gyroscopes, chronoscopes, and indicating instruments. These materials have high electrical resistance and should not be used for conductors of electrical current.

Flat High–Carbon Spring Steels

Although several types of thin flat strip are obtainable for specific applications in watches, clocks and certain instruments, only two types are readily available. These two compositions are used for over 95% of all applications requiring flat high–carbon strip. Although these materials are frequently plated, sections under 0.015” having carbon content over 0.85 with hardness over Rockwell C47 are highly susceptible to hydrogen–embrittlement even though special plating and beating operations are employed.

FOR TRAINING PURPOSES ONLY!

© Lufthansa Technical Training

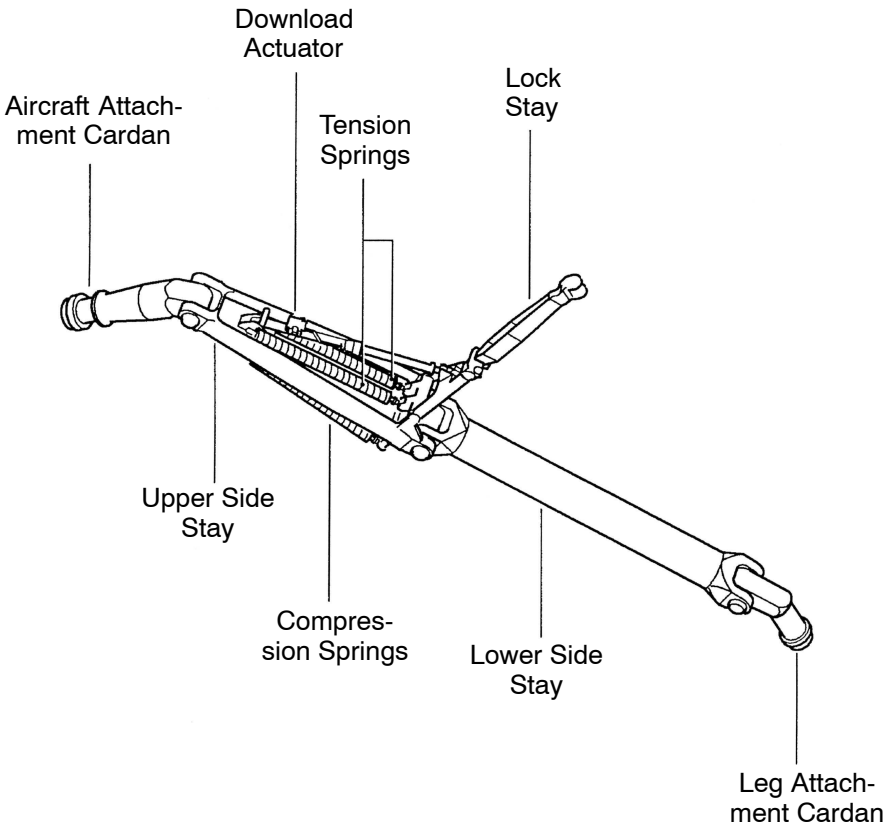

Main Landing Gear Side Stay Assembly

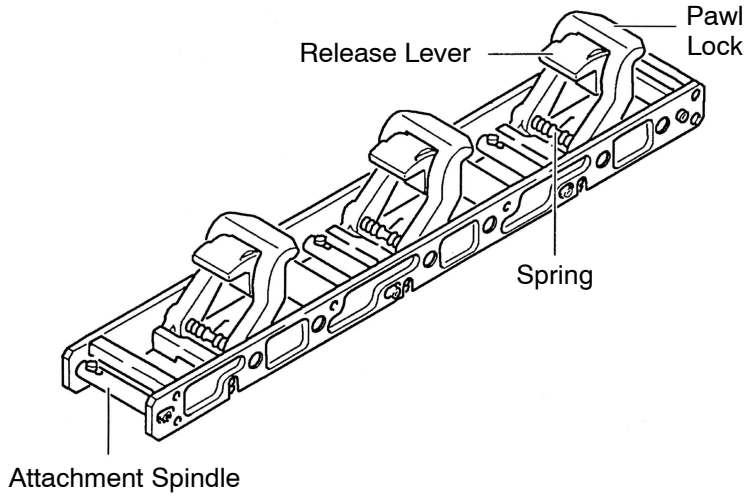

XZ Latches - Fwd Cargo Compartment

Figure 175 Examples of Spring Applications

FOR TRAINING PURPOSES ONLY!

© Lufthansa Technical Training

M6.8 BEARINGS

PURPOSE, LOADS, MATERIALS, CHARACTERISTICS AND APPLICATION OF BEARINGS

Bearings General

Introduction

Bearings are used to support the journals of shafts and axles. The shaft, which is forced by radial and thrust loads, is supported at the journals by the bearings and friction will be also reduced.

Types of Bearings

Bearings for pivot journals, which are designed to accept forces in a longitudinal direction, are called **pivot bearings** or **axial bearings**. These are different to sliding bearings or anti-friction bearings.

Bearings for supporting journals, which are designed to accept forces at right-angles to the drilling axis, are called **journal bearings** or **roller bearings**.

Loads

Bearings typically have to deal with two kinds of loading, **radial** and **thrust**. Depending on where the bearing is being used, it may see all radial loading, all thrust loading or a combination of both.

FOR TRAINING PURPOSES ONLY!

© Lufthansa Technical Training

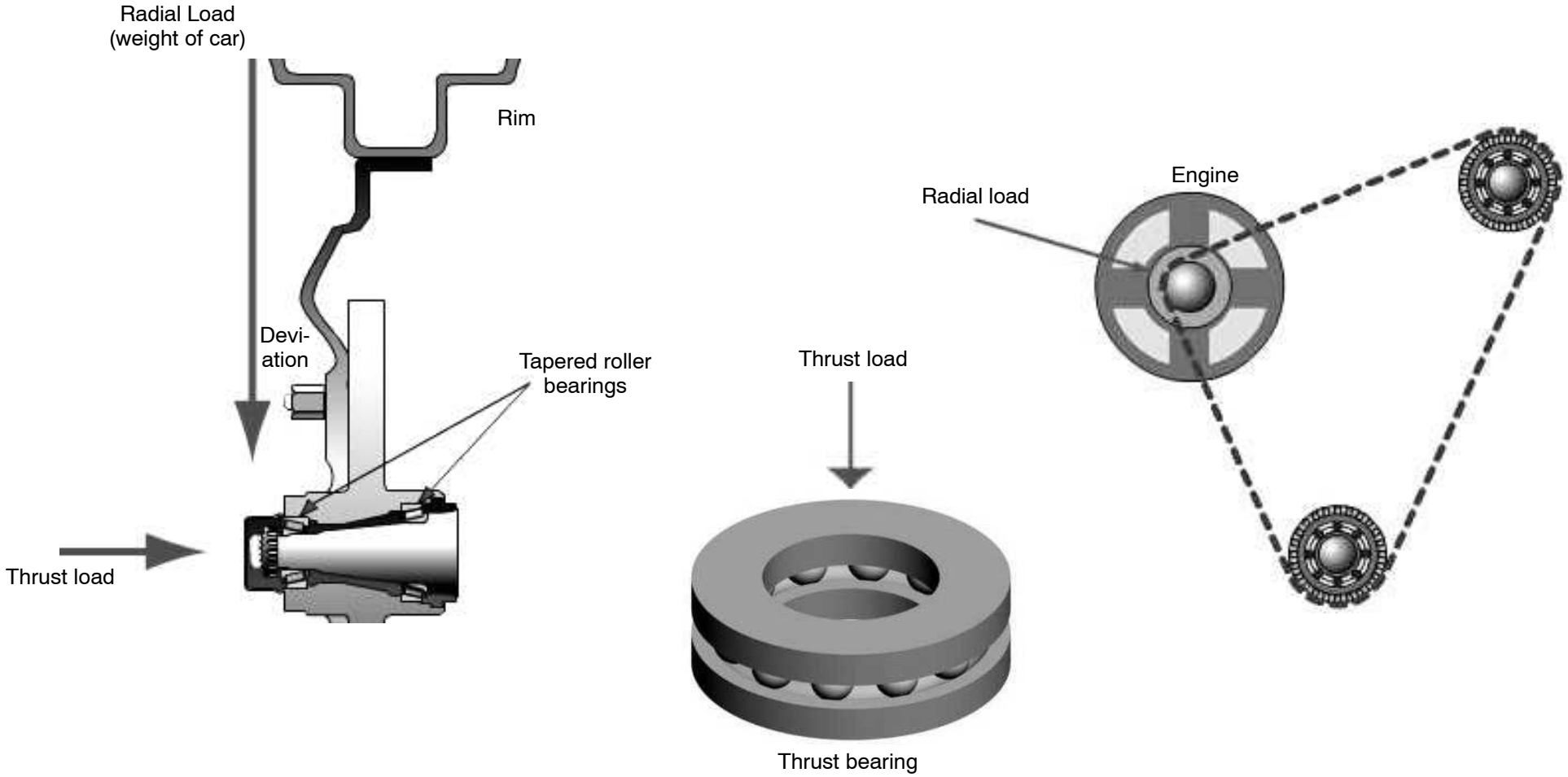

Figure 176 Type of Bearing Loads

FOR TRAINING PURPOSES ONLY!

© Lufthansa Technical Training

Sliding Bearings

General

The journal of a sliding bearing operates in a bearing box, a bearing bushing or directly in the bearing body.

Plain bearings are used mainly in applications where the loads are relatively light and the motion is relatively continuous. The prime example is crankshafts and connecting rods in internal combustion engines.

To work efficiently, there must be some clearance between the stationary part and the rotating part.

Build-up

In their simplest form, these bearings consist of load−carrying cylindrical inserts. Bearings for large journal diameters and bearings that cannot be pushed over the shafts during assembly (eg crankshafts) must be two-part bearings.

Bearing materials

Sliding bearings are made of hard wearing materials, such as copper tin alloys, copper tin zinc casting alloys, lead tin alloys, cast iron, dry-powdered metals, phosphor−bronze, white metal or special synthetics.

These materials have good sliding properties. Some have good emergency properties, ie they are insensitive to short interruptions of lubricant supply (self-lubricating bearing materials).

Bearing play

To decrease friction between journal and bearing, a continuous lubrication film has to exist. For this, bearing play is necessary.

The amount of bearing play depends on the demands the bearing is subjected to and the lubricant.

To work efficiently, extreme care needs to be taken to ensure that particle contaminants do not collect in this clearance in order that rapid wear is avoided. Regular maintenance is therefore very important with most plain bearing applications.

Lubrication

A requirement for the long working life of bearings is adequate lubrication.

Integrated oil grooves or oil wells distribute the lubricant over the full length of the bearing.

Dry-powdered bearing metals contain fluid or solid lubricants in their pores. These come out when heated and provide the necessary lubrication.

Synthetic bearings are often lubricated with water. The water also acts as a coolant, because these bearings tend to retain heat.

Where machines use sliding bearings there is the possibility of insufficient oil in the bearings when starting the machine. This can be avoided by using a grease pump. By operating the pump before starting the machine, the bearings will be pre-lubricated.

With sliding bearings, grease lubrication is usually only used for strongly stressed bearings with a large size bearing play (rolling stands), for slow-moving shafts and for swinging shafts and axles.

Advantages/disadvantages

Sliding bearings are resistant to push forces, they operate with little noise and they are suitable for both slow and fast rotational journal speeds.

Their high starting resistance, however, is disadvantageous. They also require continuous maintenance.

In view of the need for frequent maintenance, anti−friction bearings with rolling elements have largely replaced plain bearings in modern applications.

FOR TRAINING PURPOSES ONLY!

© Lufthansa Technical Training

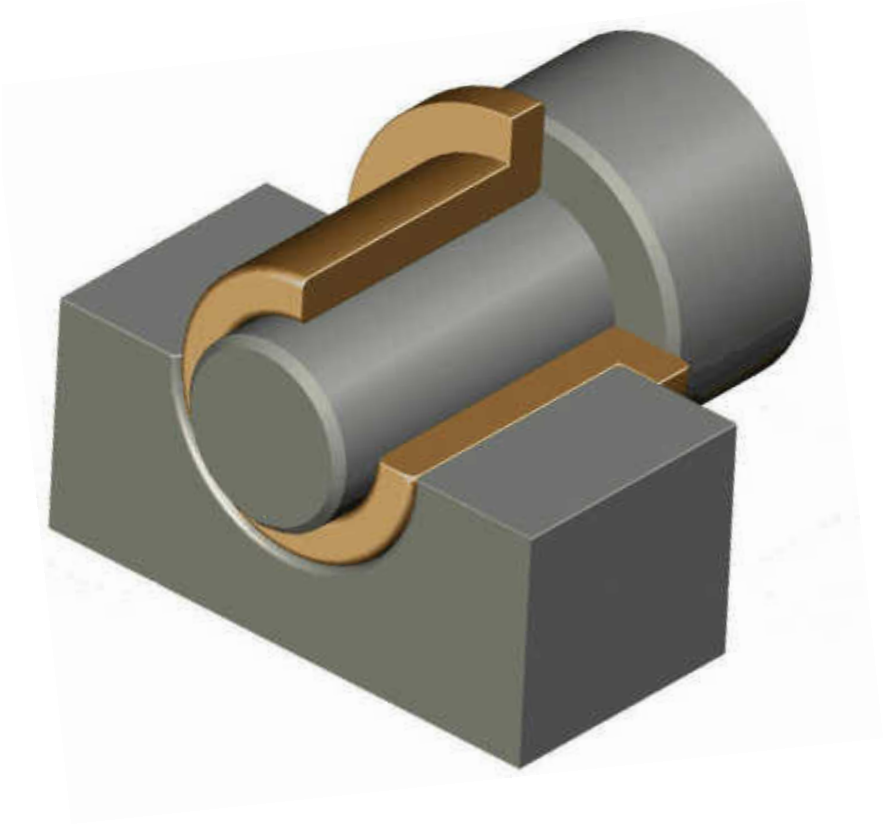



Figure 177 Sliding Bearing

FOR TRAINING PURPOSES ONLY!

© Lufthansa Technical Training

Anti-Friction Bearings

General

There are five basic types of anti−friction bearings:

- tapered
- needle
- ball
- spherical and
- cylindrical.

Each is named for the type of rolling element it employs.

Types of anti-friction bearings

There is a distinction to be made between ball bearings and roller bearings. Ball bearings have a very low starting resistance and are suitable for high rotation speeds.

Roller bearings are used if the occurring stresses are too severe for ball bearings. Theoretically, balls transfer the bearing pressure to only one spot whilst rollers transfer the pressure along a line. This is why rollers and their tracks withstand higher pressures than balls and their tracks.

Build up

An anti-friction bearing consists of the outer and inner raceway, the rolling element and usually a rolling element cage.

The roller element rolls on the tracks of the raceways. Thus the friction of sliding is replaced by the much lower friction of rolling. The rolling element can be arranged in one or two rows. The cage keeps a certain space between the rolling elements.

Operation

Pin bearings have smaller outer diameters than roller bearings for the same shaft diameter. The pins can also be installed directly between the shaft and the bearing housing without raceways.

Materials

The raceways and rolling elements are manufactured from chromium steel or chromium nickel steel.

They are hardened and ground. The rolling element and the tracks of the rings are polished.

Steel plate or brass plate is usually used as material for the cages.

FOR TRAINING PURPOSES ONLY!

© Lufthansa Technical Training

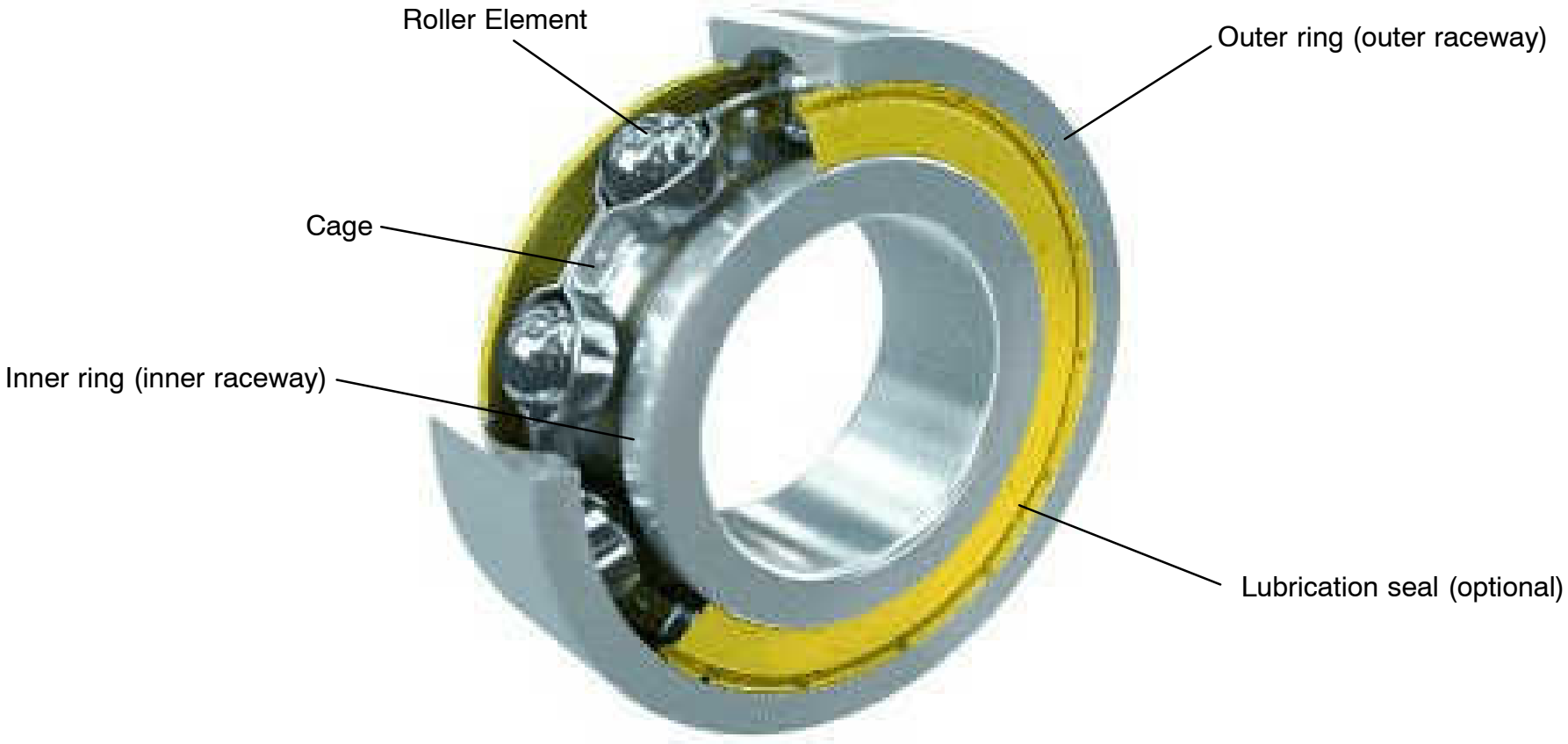

Figure 178 Anti-Friction Bearing

FOR TRAINING PURPOSES ONLY!

© Lufthansa Technical Training

ANTI-FRICTION BEARINGS (CONT'D.)

Structural shape

Anti-friction bearing are distinguished into radial- and axial bearings, depending on their specific load capability.

Radial bearings

Radial bearings can accept forces that act radially to the shaft axis.

With the exception of roller bearings and pin bearings, radial bearings can be subjected to low axial forces.

Axial bearings

Axial bearings or longitudinal bearings accept forces that act in the direction of the axis of the shaft.

Axial bearings can be subjected to low radial forces.

FOR TRAINING PURPOSES ONLY!

© Lufthansa Technical Training

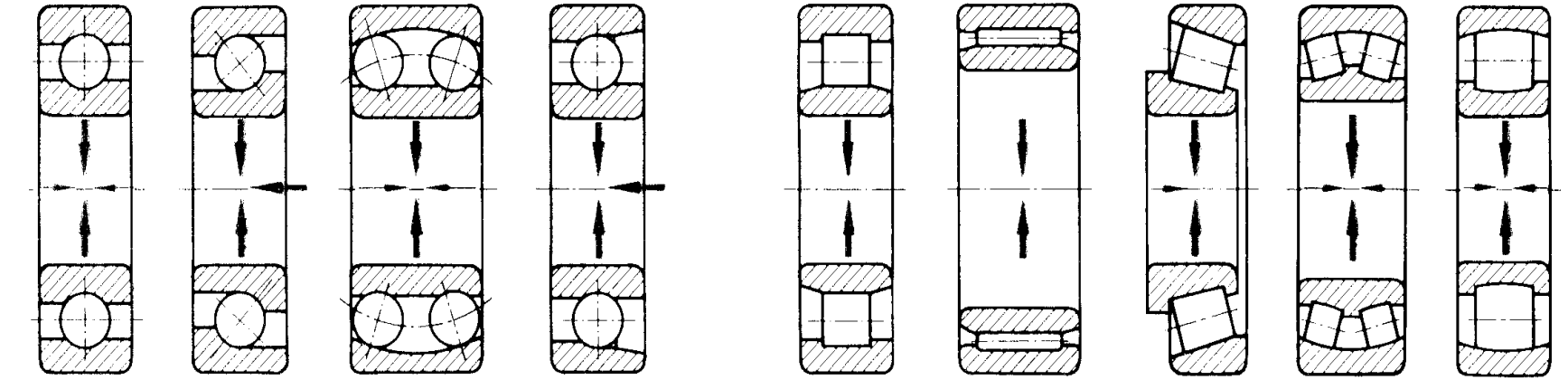

Arrows indicate the permissible direction of load or force

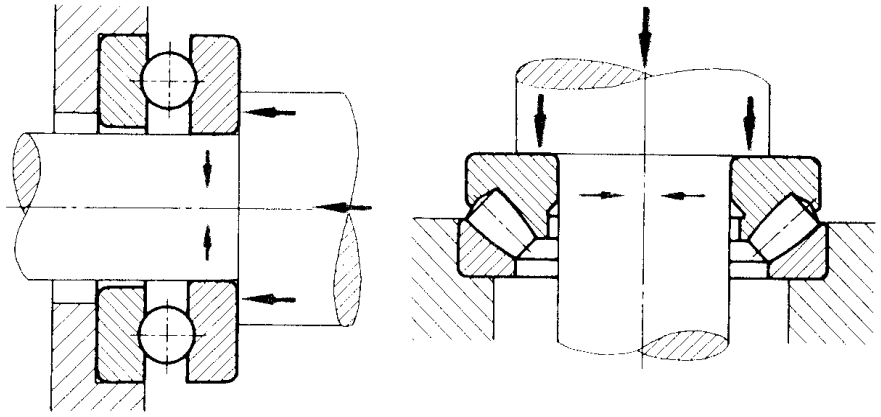

Figure 179 Radial and Axial Bearings

FOR TRAINING PURPOSES ONLY!

© Lufthansa Technical Training

TYPES OF ANTI-FRICTION BEARINGS

Ball Bearings

All types of ball bearings have a 'point' contact between the balls and the races.

Because of this point contact for a given load capacity it is generally necessary to specify a larger ball bearing than a tapered roller bearing which distributes the load over the length of the roller (line contact).

The most popular type is the 'deep groove ball bearing' which is suitable for light radial loads only. Axial or shock load conditions should be avoided since this can lead to rapid failure. It is also important to ensure that the lubricant is clean since contaminants tend to get trapped in the race groove, which ultimately limit performance and bearing life.

Deep groove ball bearings are supplied as an assembly with inseparable races; they necessarily have a radial clearance which can only be adjusted by the fits of the inner and outer races.

They are mostly used where size, load capacity and radial clearance are not important, but where ease of assembly and low cost are.

Needle Roller Bearings

Needle roller bearings are similar to cylindrical roller bearings but with long, thin rollers, giving them a very compact cross–section.

They are very adaptable and have a high radial load capacity in relation to their sectional height, but can cope only with very light axial loads.

Typical applications are in the synchromesh mechanisms of automotive gearboxes, and as planetary gear bearings.

Cylindrical Roller Bearings

The most common use of cylindrical roller bearings is at non–locating positions where it is necessary to accommodate thermal expansion effects by allowing axial displacement (floating) of the shaft relative to the housing.

Inner and outer races are separable (which facilitates mounting and dismounting) and the cylindrical rollers have line contact with the races so they can carry more radial load than the point contact of ball bearings.

The cage must align and retain the rollers which necessitates a heavier cage and fewer rollers when compared to a tapered roller bearing of similar size, and hence a lower load capacity.

Designs are also available to carry a limited axial load by integrating additional flanges on the inner or outer race. However, the full axial thrust must be taken between the flanges and the roller ends which can lead to high stress concentrations.

FOR TRAINING PURPOSES ONLY!

© Lufthansa Technical Training

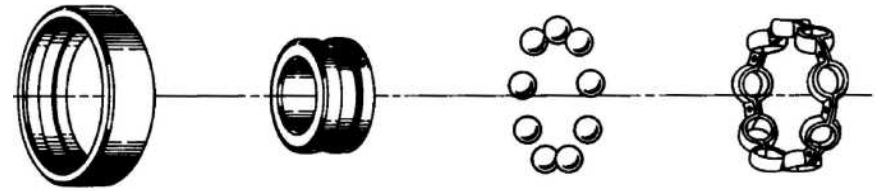

Ball

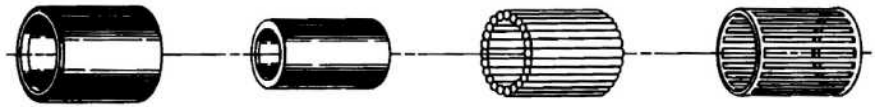

Needle rollers

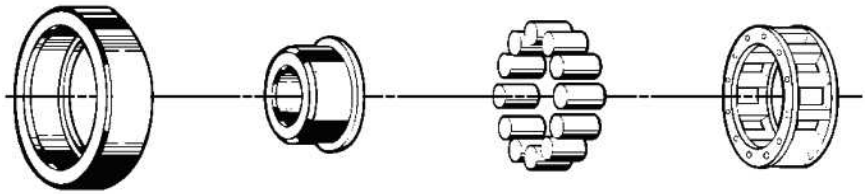

Cylindrical rollers

Figure 180 Common Anti-Friction Bearing Types

FOR TRAINING PURPOSES ONLY!

© Lufthansa Technical Training

TYPES OF BEARINGS (CONT'D.)

Spherical Roller Bearings

The self-aligning feature of spherical roller bearings allows minor angular displacements between shaft and housing to be accommodated. They have a high radial load-carrying capacity, but under heavy load the stress is not evenly distributed and true rolling motion only occurs at two contact points on each roller. This naturally induces skidding along the roller length and therefore the spherical roller bearing has a higher coefficient of friction and lower speed capabilities than other types of roller bearings.

The cage must be of an extremely robust construction to counteract the roller skewing effect which increases the cage moment of inertia and limits the number of rollers. It is best suited to applications where there is a risk of misalignment at assembly, and where speed and deflection criteria are not exacting.

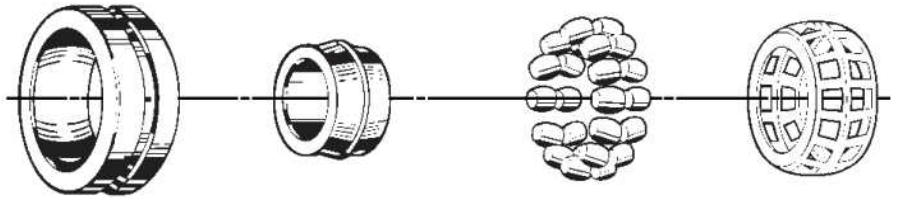

Figure 181 Spherical Roller Bearing

Tapered Roller Bearing

The tapered roller bearing combines the benefits of all the other bearing types as well as offering additional advantages:

- Combined radial and thrust load capacity
- A longer relative life for a given bearing size, or
- Reduced bearing size for a given load capacity.
- Adjustability: for optimum performance either end-play or preload values can be specified according to the design requirements.
- Less sensitive to contaminated environments due to the natural pumping action which forces any particle contaminants out of roller/race contact area.
- Low friction coefficient and high speed capabilities due to true rolling motion, when compared to other roller bearing types.
- Simple mounting and dismounting with separable inner and outer races.
- A choice of mounting arrangements to suit the loading aspects and design constraints of an application.
- Lower price for a given calculated fatigue life.

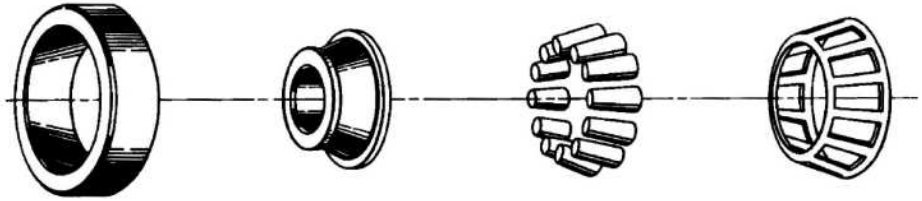

Figure 182 Tapered Roller Bearing

FOR TRAINING PURPOSES ONLY!

© Lufthansa Technical Training

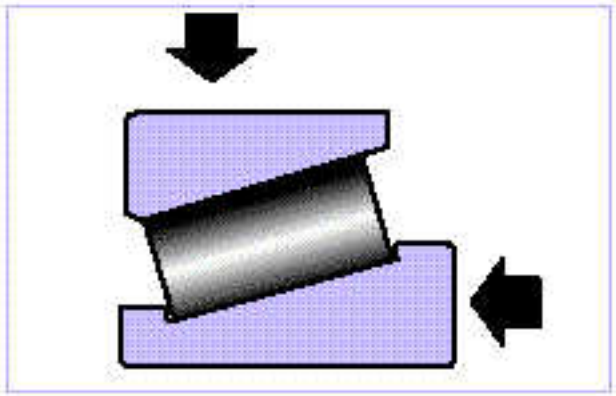

The tapered roller bearing can handle both radial and thrust loads

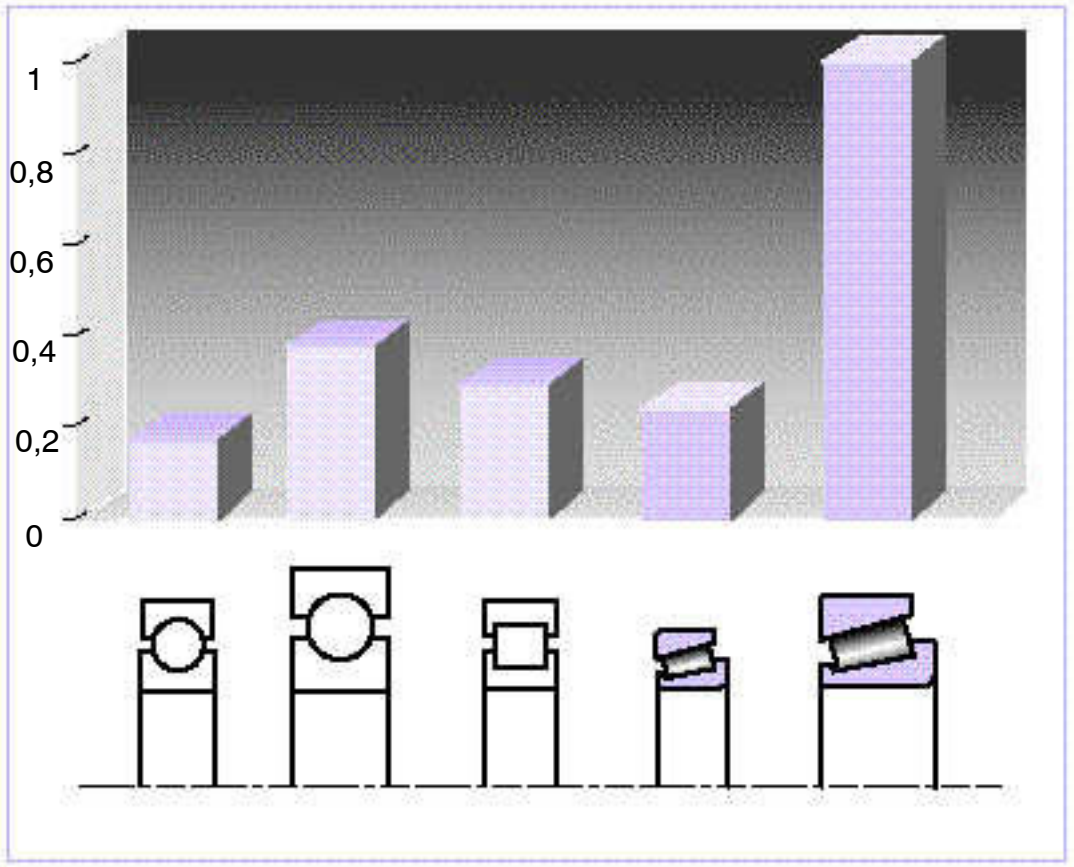

The same calculated fatigue life as for ball or cylindrical roller bearings can be achieved under the same combined axial / radial load by a tapered roller bearing of a much smaller bore.
Alternatively, a tapered roller bearing of the same bore can achieve much greater fatigue life.

Figure 183 Tapered Roller Bearing: Advantages

FOR TRAINING PURPOSES ONLY!

© Lufthansa Technical Training

M6.9 TRANSMISSIONS

GEAR TYPES AND THEIR APPLICATIONS, BELTS AND PULLEYS, CHAINS AND SPROCKETS

Transmissions

General

Physical power transmission to the engine, to flying control surfaces, undercarriage etc is achieved by belts, cables, control chains, chainwheels, pulleys, levers, shafts, pull- and push-rods, cranks, eccentrics, threads, friction wheels, hydraulics and compressed air.

FOR TRAINING PURPOSES ONLY!

© Lufthansa Technical Training

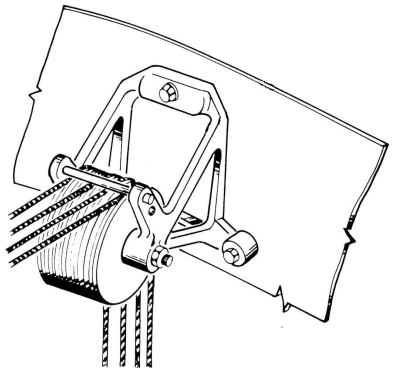

Cables and pulleys

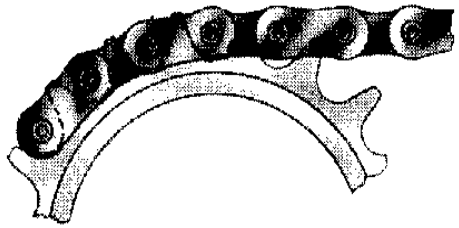

Chains

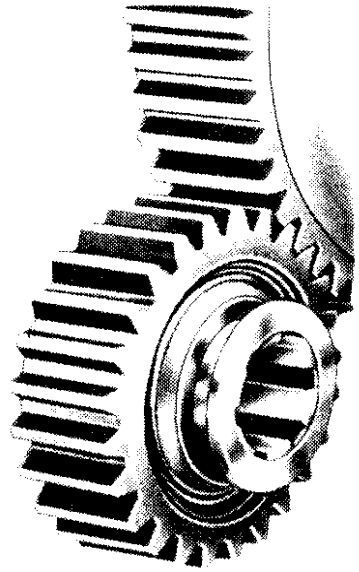

Gear

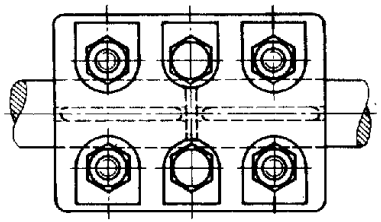

Clutches

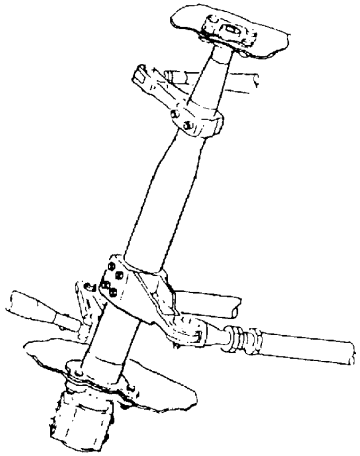

Shafts

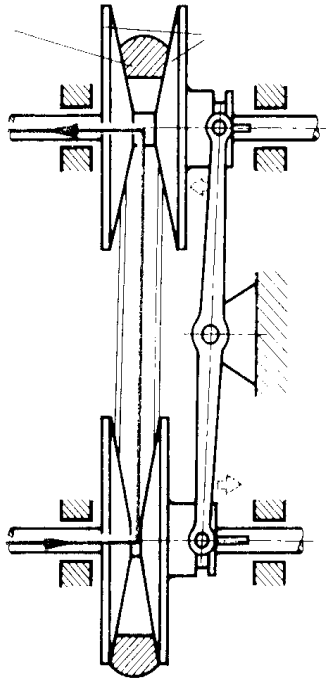

Drive

Figure 184 Transmissions

FOR TRAINING PURPOSES ONLY!

© Lufthansa Technical Training

Control Chains and Chain Wheels

Introduction

Chains provide strong, flexible and positive connections and are generally used wherever it becomes necessary to change the direction of control runs in systems where considerable force is exerted.

Chains may be used solely in control runs or in conjunction with cable assemblies.

The change of direction is achieved by the use of chain wheels.

Applications

Chains may be found in:

- Control Column Installations
- Aileron und Elevator Controls
- Trim Control Systems.

NOTE: Incorrect assembly of chains should be rendered impossible by the use of non-reversible chains in conjunction with the appropriate types of wheels, guards and connectors

FOR TRAINING PURPOSES ONLY!

© Lufthansa Technical Training

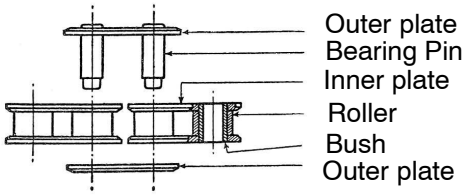

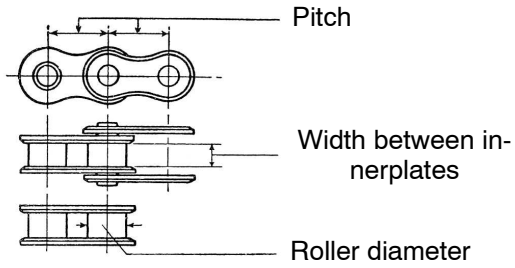

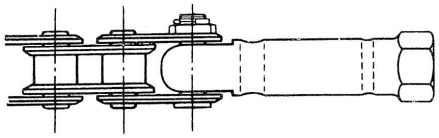

Typical chain end assembly

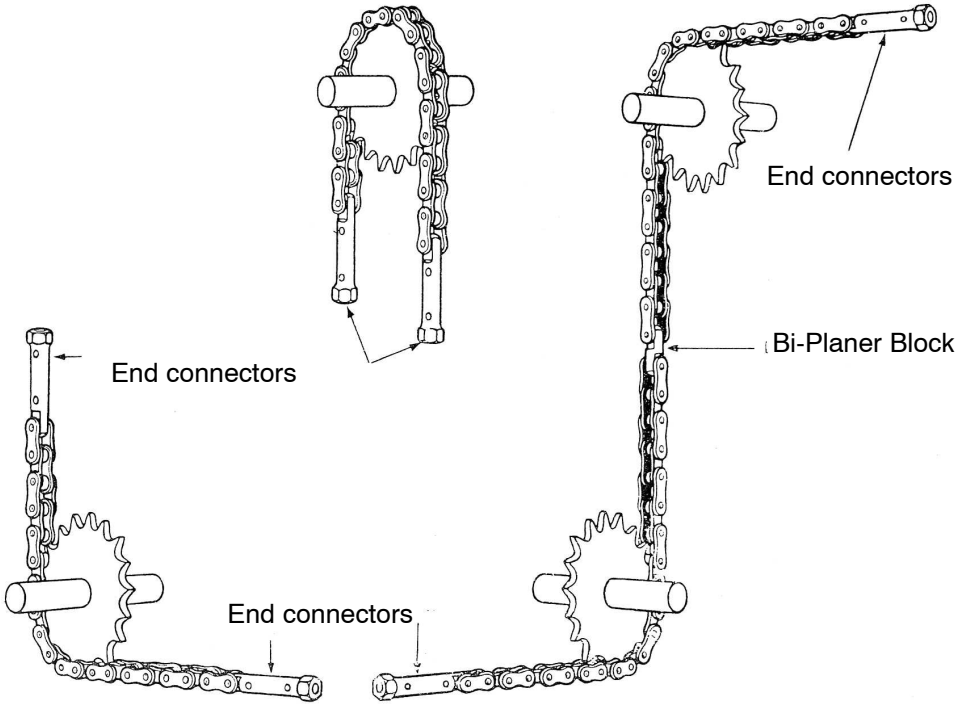

Figure 185 Typical Chain Assembly Arrangements

FOR TRAINING PURPOSES ONLY!

© Lufthansa Technical Training

Chain Drives

General

Chain drives are suitable for non-slip power transmission with large spaces between axles when cogwheels are not available to decrease the size of the spaces.

Most often roller chains or gear chains are used, for example, for the thrust-drive of machine tools and in the field of automobile manufacture.

Roller chains and gear chains have low frictional loss and are smooth-running.

Roller chains

The turnable rolls of roller chains roll along the flanks of the chain wheel teeth. The number of teeth on the chain wheels should not be smaller than 12, otherwise chain wear will be too high.

Roller chains do not require much maintenance and will work without any disturbance even when temporarily contaminated or during rough operation.

Gear chains

Gear chains have cogged lugs which engage into the gaps between the teeth of the chain wheel.

They are virtually silent in operation. The number of teeth of the chain wheels should not be smaller than 17 with regard to wear.

FOR TRAINING PURPOSES ONLY!

© Lufthansa Technical Training

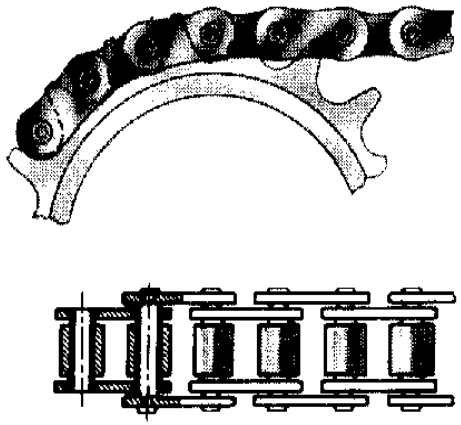

ROLLER CHAIN

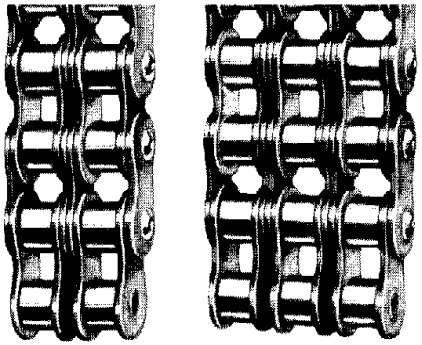

MULTIPLE ROLLER CHAIN

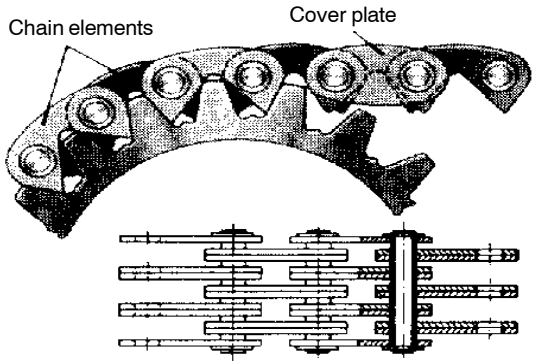

TOOTH-TYPE CHAIN

Figure 186 Chain Drives

FOR TRAINING PURPOSES ONLY!

© Lufthansa Technical Training

Trim Control

General

Power transmission for trim is achieved via a chain drive.

The revolving chain is is tensioned by a chain tightener.

Safety covers prevent the separation of the chain from the chainwheel.

FOR TRAINING PURPOSES ONLY!

© Lufthansa Technical Training

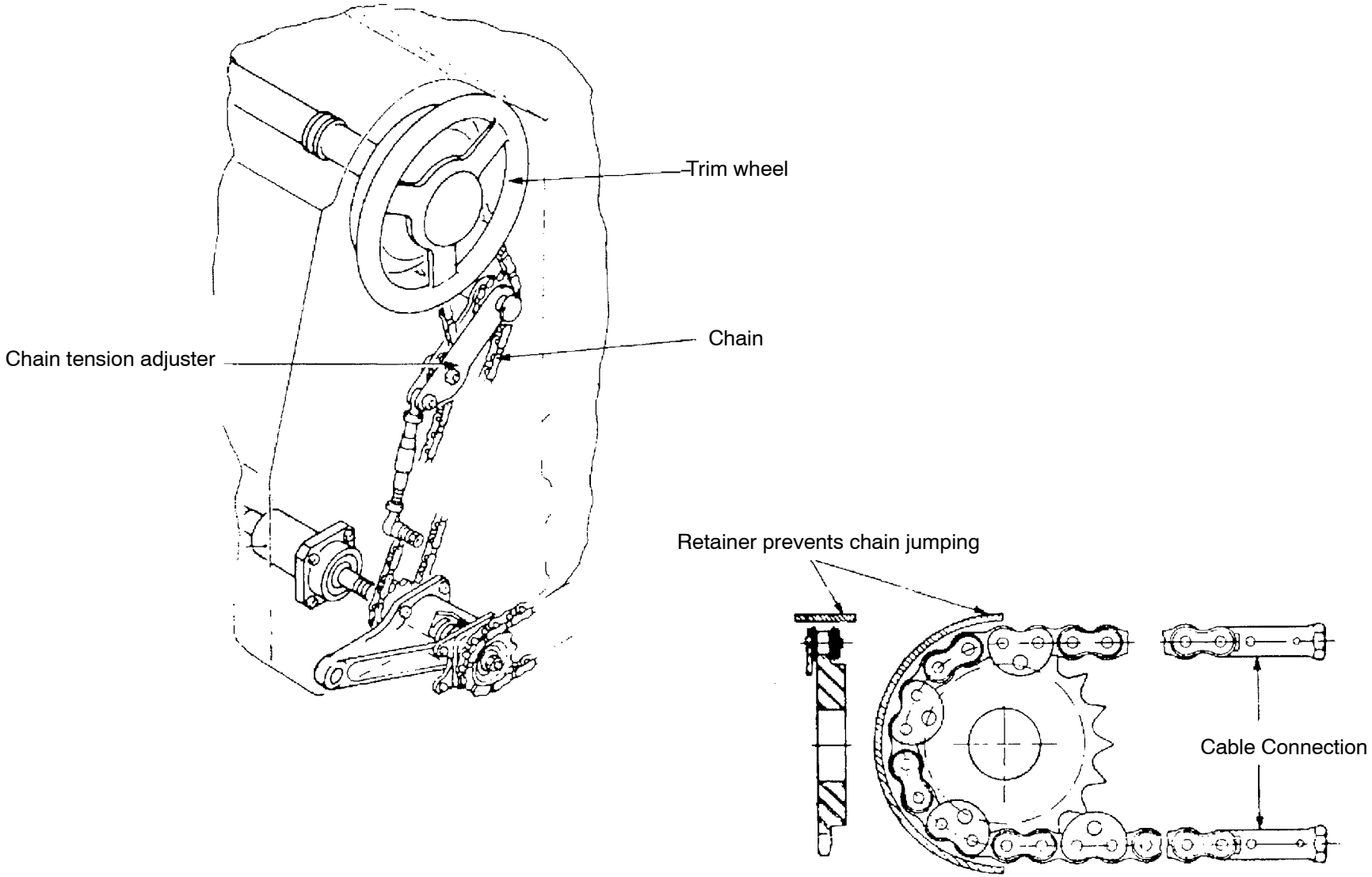

Figure 187 Trim Control

FOR TRAINING PURPOSES ONLY!

© Lufthansa Technical Training

Couplings

General

Couplings are used to connect two shafts with each other. They are classed as:

- solid
- movable and disconnectable couplings and
- safety couplings.

SOLID COUPLINGS

General

By using solid couplings a rigid connection between two shafts is achieved. The best known solid couplings are sleeve couplings and disk couplings.

Sleeve Couplings

The sleeve coupling consists of two cast iron sleeves which are fixed to the shaft ends by screws. If the contact pressure is not high enough to transfer the torque, feather keys are added.

Disk Couplings

With a disk coupling, two disks are fitted to the shaft ends by screws. Balancing of the two disks is achieved by a cylindrical insertion or a centre plate. Feather keys provide shaft attachment. Disk couplings have no protruding parts and are therefore accident-proof.

FOR TRAINING PURPOSES ONLY!

© Lufthansa Technical Training

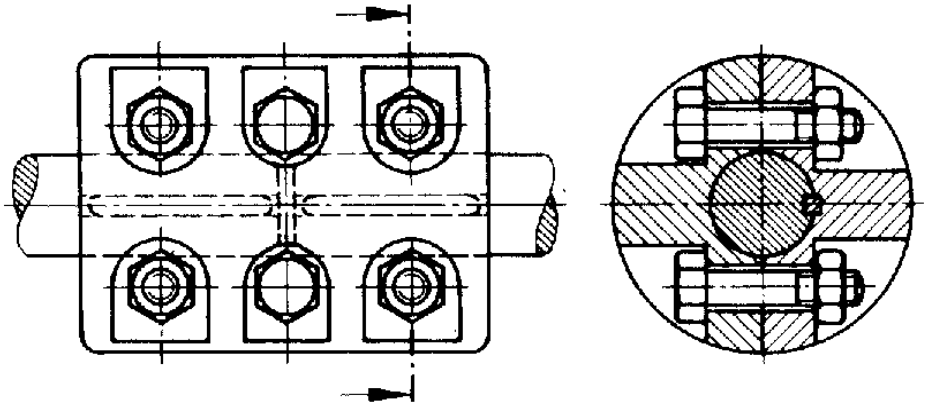

SLEEVE COUPLING

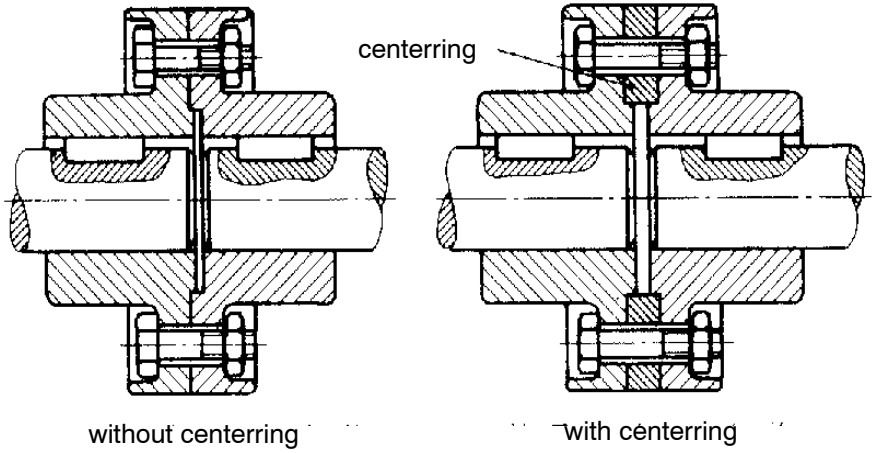

DISC COUPLING

Figure 188 Sleeve and Disc Coupling

FOR TRAINING PURPOSES ONLY!

© Lufthansa Technical Training

MOVABLE COUPLINGS

Movable couplings comprise expansion couplings, hinge couplings and elastic couplings. They are used if the shafts are not in alignment or if the position of the shafts change during operation.

Extension Couplings

The extension couplings allow a small longitudinal movement of one shaft in relation to the other. This axial movement must take place because, for example, the length of the shaft may change due to heating during operation. One coupling of this kind is the claw coupling which is also used as disconnectable coupling.

Hinge Couplings general

The hinge couplings comprise cross-links, dry-disk joints and ball-and-socket joints. These are used in cases where the direction of the axes of the shafts linked to the couplings change in a certain angle. Depending on the kind of coupling this angle is limited.

Cross-Links

The cross-links are suitable to transfer stronger forces, such as in automobiles. If the journals of the journal cross assembly run in pin bearings, these links need no maintenance.

Dry-Disk Joints

The dry-disk joints consist of elastic clutch disks, each connected to a flange at the end of the shaft. The angle around which the shaft axes can rotate is 8°.

FOR TRAINING PURPOSES ONLY!

© Lufthansa Technical Training

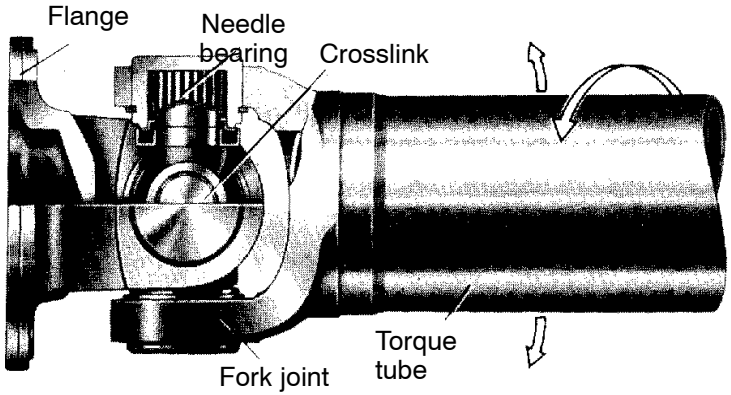

UNIVERSAL JOINT

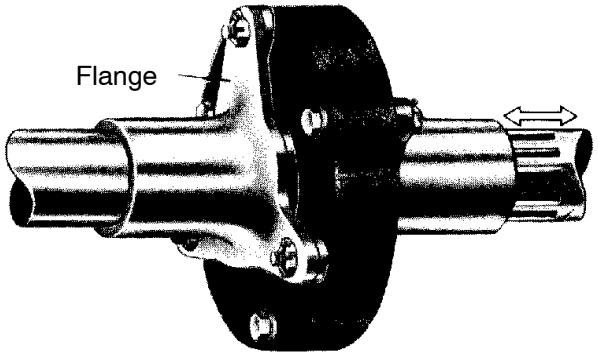

DRY-DISC JOINT

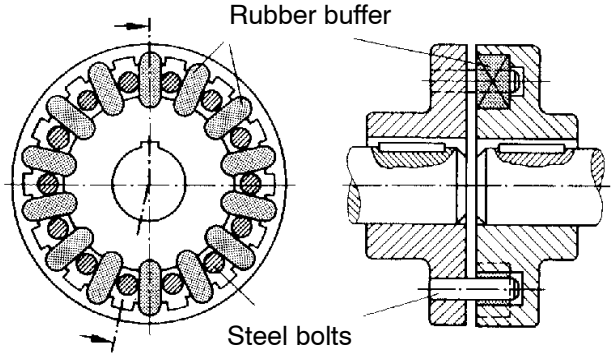

ELASTIC COUPLING

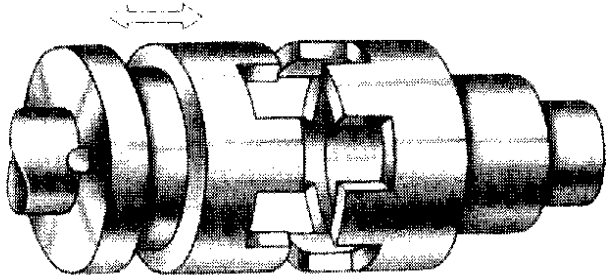

CLAW COUPLING

Figure 189 Movable Couplings

FOR TRAINING PURPOSES ONLY!

© Lufthansa Technical Training

Function of gears

General

In general, transmissions provide torque–speed conversions by providing either gear reduction or speed reduction. Transmissions consists of a housing, a driving shaft, a set of gears and oil that both lubricates and cools the system.

There are different types of transmissions and they are used for two main tasks.

- One is to reduce speed and the other is to reduce torque. This means, that the driven shaft is rotating on a faster or slower speed than the driving shaft.
- In addition, gear boxes can be used to change the direction of drive. In order to achieve the angle of the desired change, the gear box comprises of different sets of bevel gears.

FOR TRAINING PURPOSES ONLY!

© Lufthansa Technical Training



Figure 190 Gear Box Example

FOR TRAINING PURPOSES ONLY!

© Lufthansa Technical Training

Gear Drives

Introduction

Gear drives transfer rotational movement at low speeds without slip. This means that a change of the transformation ratio (which could be caused by slipping of a belt) is not possible.

To reduce noise as much as possible, the wheels of high-speed gear drives should have ground tooth-flanks and should operate in an oil bath.

To prevent accidents, all gear drives must be covered by efficient protection devices which also prevent contamination.

Power Transmission

Power transmission in parallel shafts is achieved by spur wheels or by a cogwheel with internal toothing and pinion (a small driving wheel). In the case of shafts with axes that stand perpendicular to each other, power transmission is achieved by bevel gears.

If the axes are crossing, power transmission is achieved by a worm and worm gear or by a helical gear.

By the use of a spur wheel and spur rack, rotational movements are transformed into straight-line movements and vice versa.

FOR TRAINING PURPOSES ONLY!

© Lufthansa Technical Training

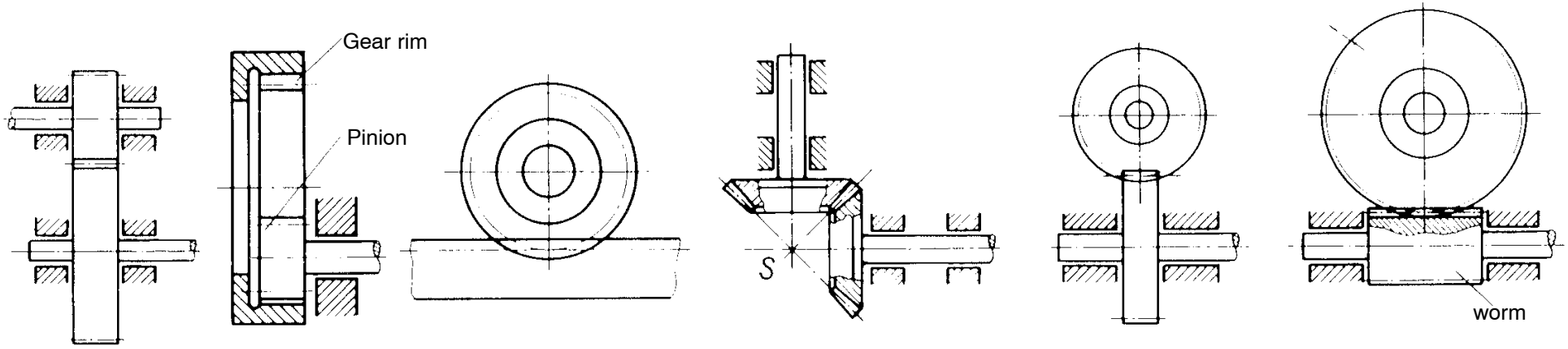

Figure 191 Gear Drives

FOR TRAINING PURPOSES ONLY!

© Lufthansa Technical Training

SPUR GEARS

General

Spur gears may have straight teeth, slanting teeth and herringbone teeth. On wheels with slanting or herringbone teeth, the teeth are arranged helically on the wheel.

Slanting Teeth

Wheels with slanting teeth operate much more silently than wheels with straight teeth, because at all times several teeth are engaged (not engaged suddenly with their entire breadth).

However, slanting teeth create a force that acts in an axial direction. This force has to be picked up by axial bearings. To avoid excessive axial force, the slanting angle of the teeth should not be larger than 20°.

Herringbone Teeth

In wheels with herringbone teeth, the axial forces eliminate each other. Because of this, herringbone gears are used for the transmission of large forces.

FOR TRAINING PURPOSES ONLY!

© Lufthansa Technical Training

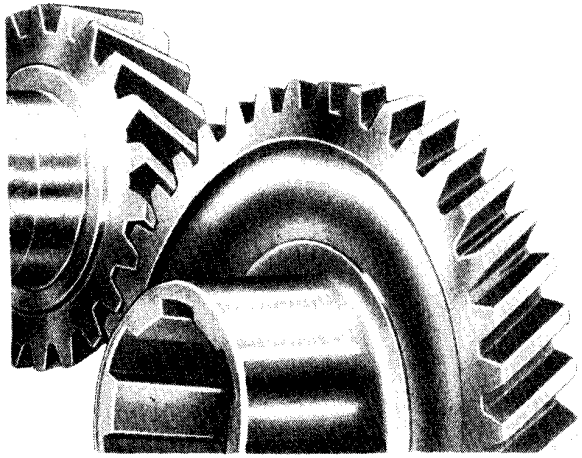

STEPPED GEAR

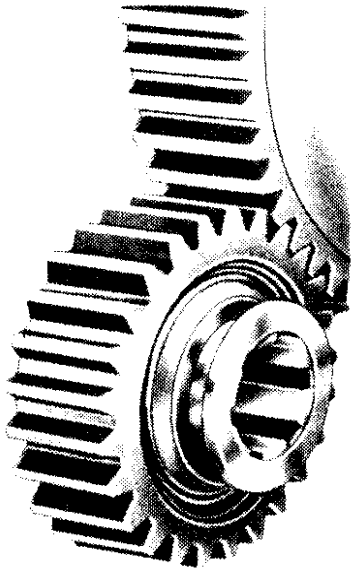

STRAIGHT THEETH

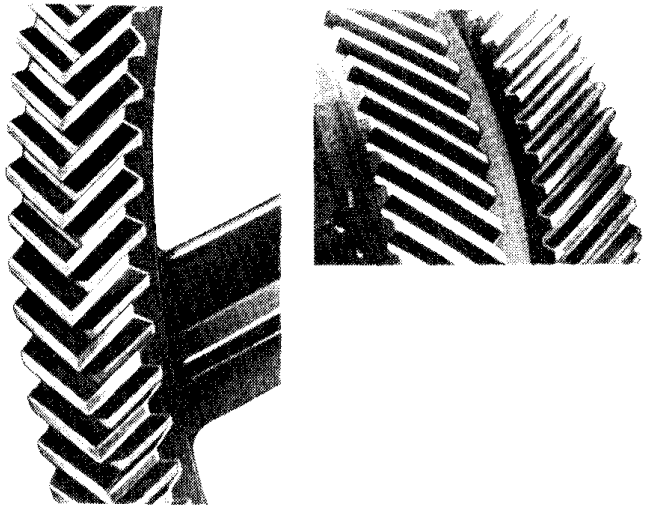

SLANTING THEETH GEAR
OR HERINGBONE GEAR

Figure 192 Spur Gears

FOR TRAINING PURPOSES ONLY!

© Lufthansa Technical Training

BEVEL GEARS

General

Bevel gears that operate together are two conical surfaces which roll without slipping because of their tooth system. The bevel peaks meet at one point, provided the bevel wheels are correctly manufactured.

In a bevel gear, a wheel cannot be exchanged for another with a different number of teeth because the angle in which the teeth are cut or slotted to the body of the wheel changes with the number of teeth.

Teeth Arrangement

Bevel wheels are manufactured with straight, circular or helical teeth. Those with curved teeth operate with very little noise, but they create a larger axial force than wheels with straight teeth.

FOR TRAINING PURPOSES ONLY!

© Lufthansa Technical Training

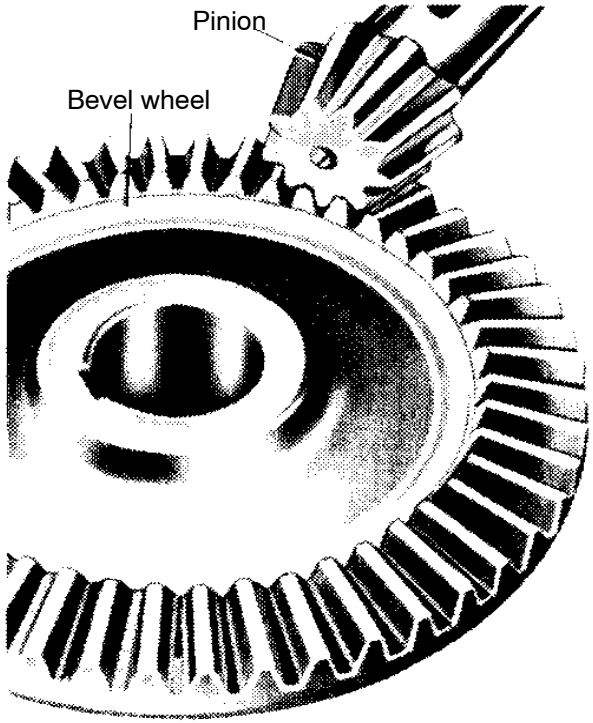

STRAIGHT BEVEL GEAR

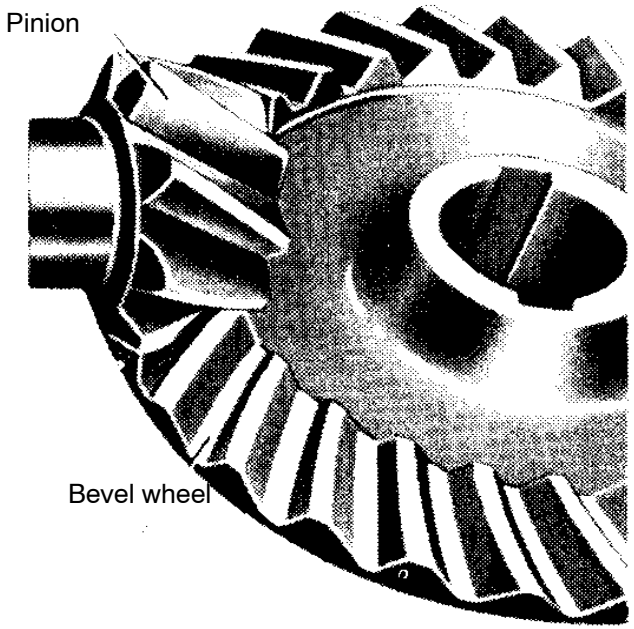

HELICAL BEVEL GEAR

Figure 193 Bevel Gears

FOR TRAINING PURPOSES ONLY!

© Lufthansa Technical Training

HELICAL GEARS

General

Helical gears are only suitable for the transfer of small forces, because the flanks of the teeth contact in only one spot.

Helical wheels that operate together must both have teeth that are inclined to the same side (left or right). The degree of slant of both wheels may vary.

The combination of the slanting angles results in the axial angle of both wheels - usually 90°.

WORM GEARS

General

Large transmissions can be achieved with worm drives when the drive is created by the worm. When a one-toothed worm turns once, the respective worm gear moves only the distance of one tooth

The ratio of transmission becomes larger the higher the number of teeth of the worm gear.

FOR TRAINING PURPOSES ONLY!

© Lufthansa Technical Training

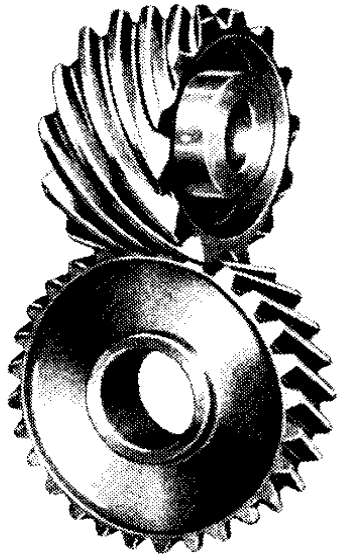

HELICAL GEARS



WORM GEARS

Figure 194 Helical and Worm Gears

FOR TRAINING PURPOSES ONLY!

© Lufthansa Technical Training

Gear types

General

Gear units transmit the (usually constant) rotational speed of the driving engine in a way that the shaft or spindle turns with the required rotational speed. Gear units can also change the direction of the rotational movement.

STEPPED-PULLEY DRIVE

General

With a single-pulley drive, only as many rotational speeds can be reached as the belt pulleys have stages.

More than 5 stages are rarely used because a higher number of stages would take up too much space. If two three-stage belt-drives are arranged in series, 9 rotational speeds (not 6) will result.

To get the same belt tension for every stage the sum of both working stage diameters must be identical.

To enable the V-belt to move from one stage to the next in a V-belt drive, the distance between the axes of the belt pulleys must be made adjustable with a rocker or an eccentric.

FOR TRAINING PURPOSES ONLY!

© Lufthansa Technical Training

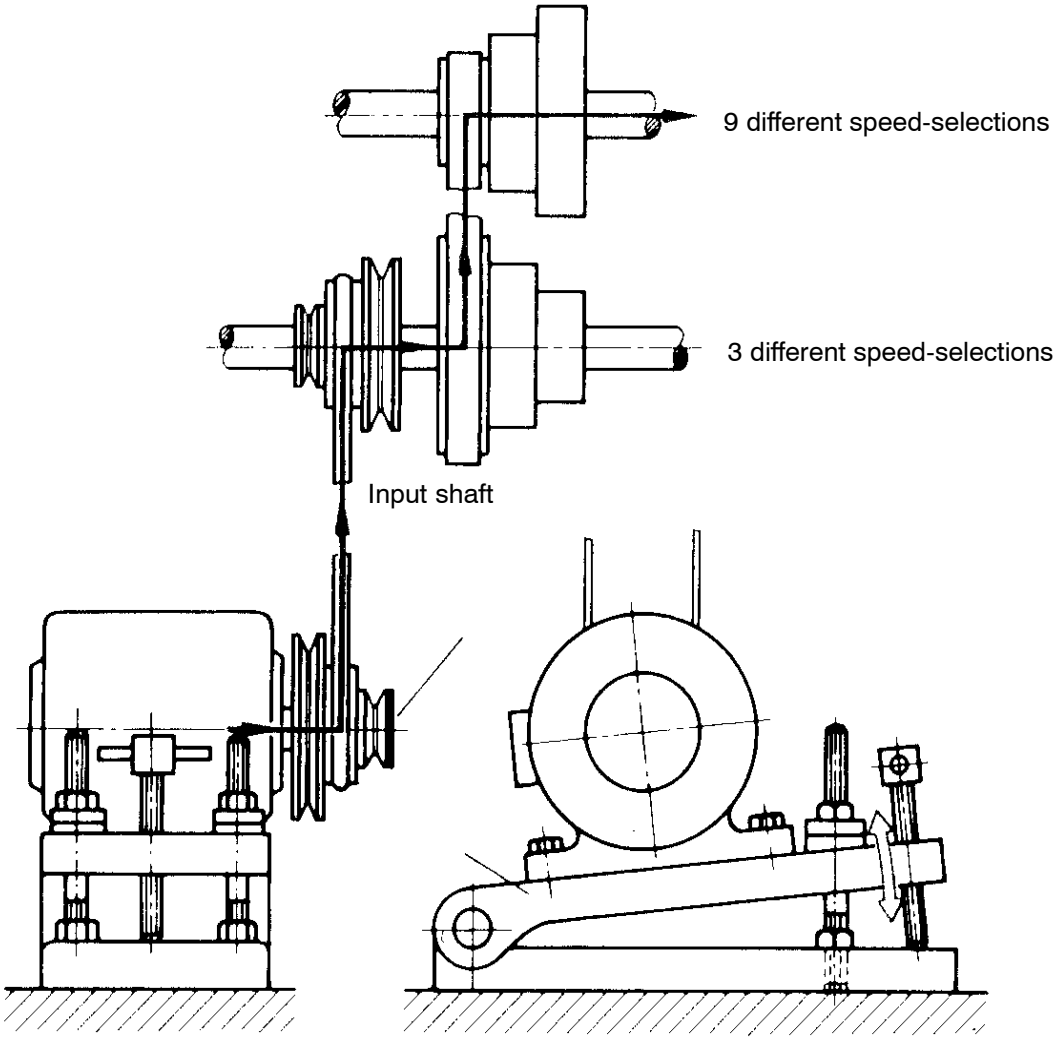

Figure 195 Stepped Pulley Drive

FOR TRAINING PURPOSES ONLY!

© Lufthansa Technical Training

Toothed-Wheel Gears

General

There are two types of variable gears, depending on how the individual toothed wheels contact each other:

- Stepped transmission gears
- and Driving-key-type transmission.

STEPPED TRANSMISSION GEARS

General

The wheels of variable gears are engaged and reach the desired rotational speed by moving them sideways. If many rotational speeds are required by a machine tool, several gears are arranged in series.

Variable gears are suitable to transmit large forces. They are used to adjust the revolutions of turning machines, milling machines and planing machines.

Like all other toothed-wheel gears, they are not suitable to drive machines for precision work.

Variable gears usually may only change gears during start up or run down.

FOR TRAINING PURPOSES ONLY!

© Lufthansa Technical Training

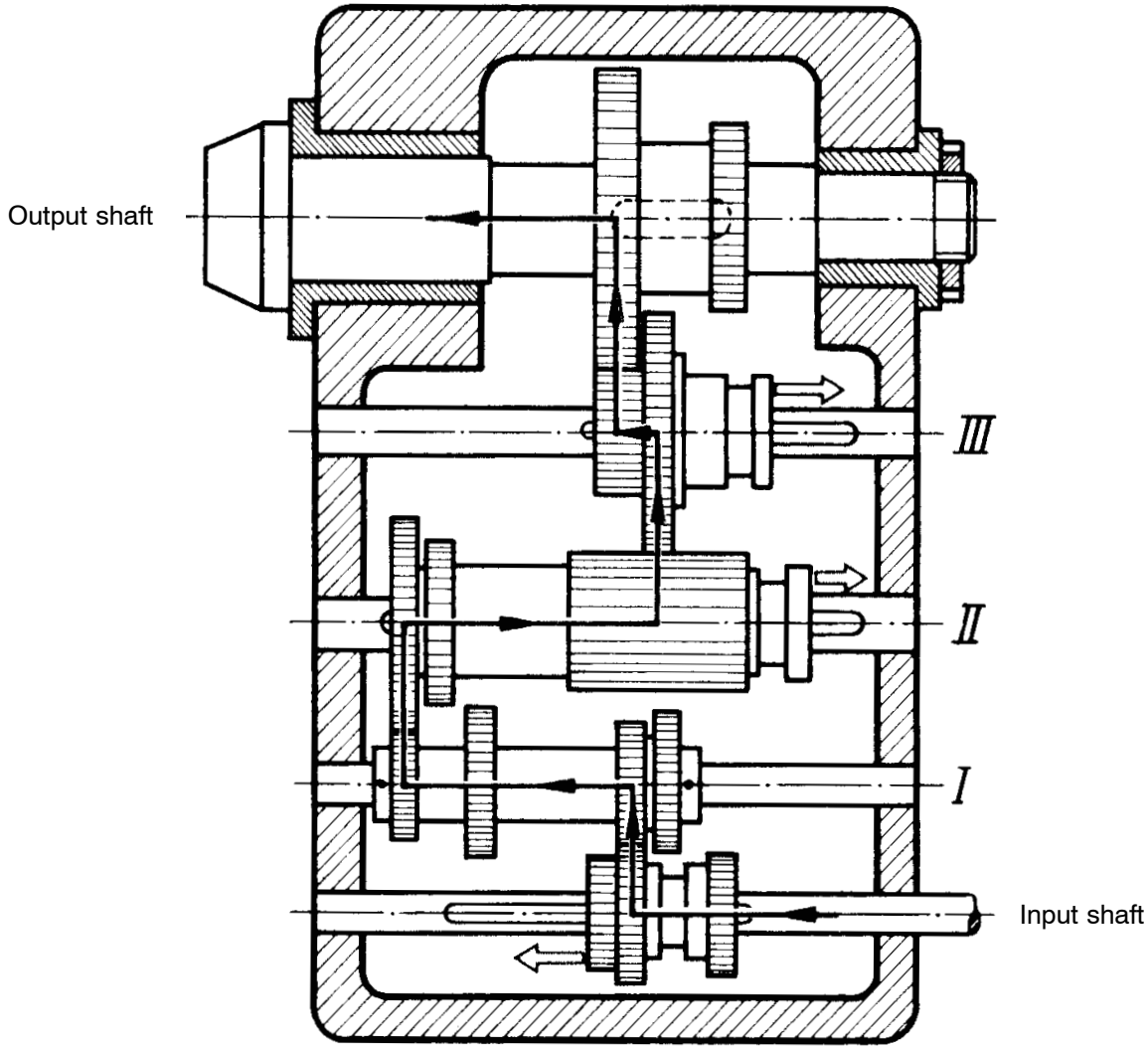

Figure 196 Stepped Transmission Gear Drive

FOR TRAINING PURPOSES ONLY!

© Lufthansa Technical Training

DRIVING-KEY-TYPE GEARS

General

The driving-key-type gear can only be used to transmit small forces at low rotational speeds.

The tightly-fitted toothed wheels on the driving shaft are constantly engaged to the loosely-adjusted wheels of the driven shaft.

An elastic spring coupling key is moved in axial direction in the slot of the hollow driven shaft. This elastic spring coupling key engages in the splines of the wheels and moves the shaft.

Rings which are installed between the individual wheels press the elastic spring coupling key out of the spline of one wheel before it can engage in the spline of the next wheel.

Driving-key-type gears do not need much space and can change gears during operation.

FOR TRAINING PURPOSES ONLY!

© Lufthansa Technical Training

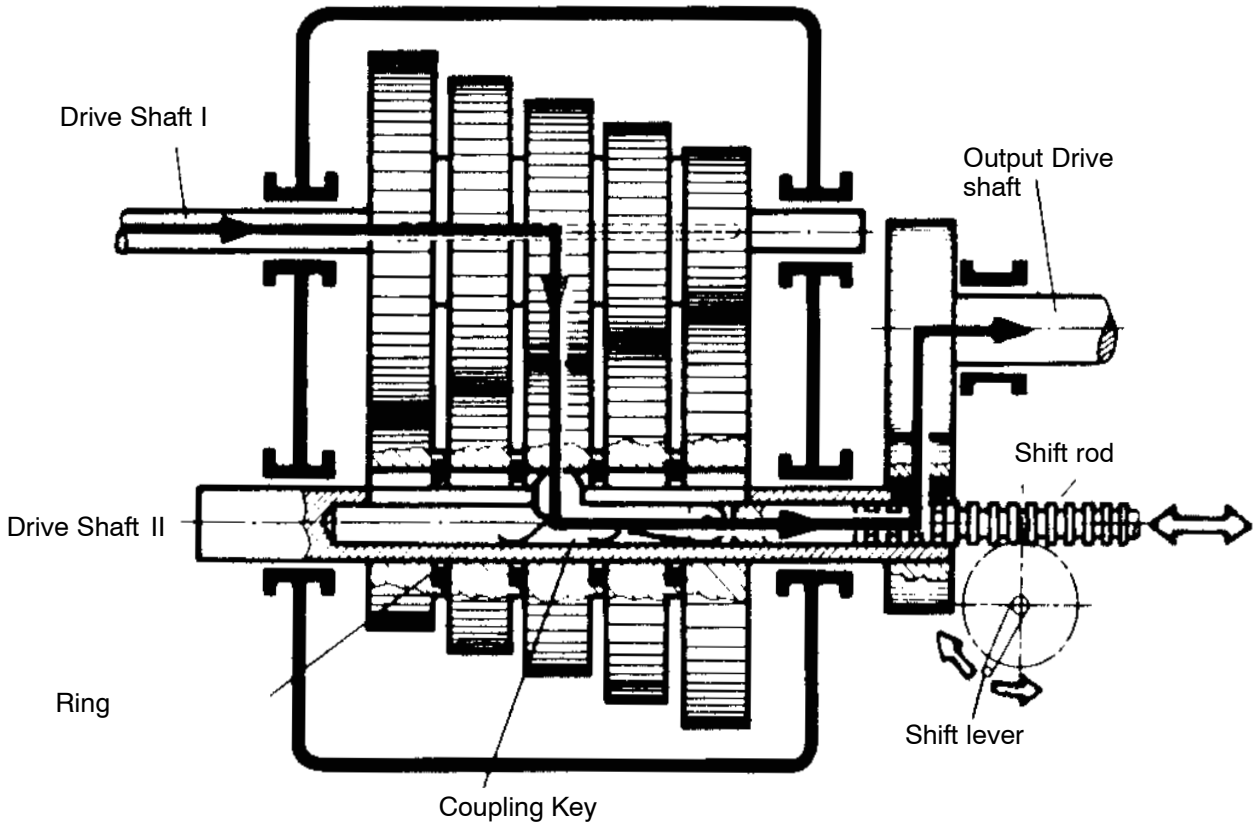

Figure 197 Driving-Key-Type Gear

FOR TRAINING PURPOSES ONLY!

© Lufthansa Technical Training

Friction Gears and Cone Pulley Drives

FRICTION GEARS

General

Friction gears have a simple set-up. The driving friction wheel is movable, so that the rotational speed of the driven friction disk is infinitely variable.

The efficiency of these gears is unfavourable.

CONE PULLEY DRIVE

General

The cone pulley drive is suitable for transmission of smaller forces at high rotational speeds.

The cone pulley pairs are axially movable. By adjusting the pulleys, the V-belt is forced to move more to the outside of one pulley and more to the middle of the other. This changes the effective pulley diameters and thus the transmission ratio.

Cone pulley drives achieves also a infinitely variable rotational speed.

The cone pulley drives are built for adjustment ranges up to 10:1. Adjustment range here means the ratio of the largest to the smallest output speed.

Infinitely Variable Rotational Speed

The infinitely variable rotational speed makes it possible to adjust to every desired rotational speed within the speed range during operation. This is achieved mechanically at the aforementioned gear drives.

FOR TRAINING PURPOSES ONLY!

© Lufthansa Technical Training

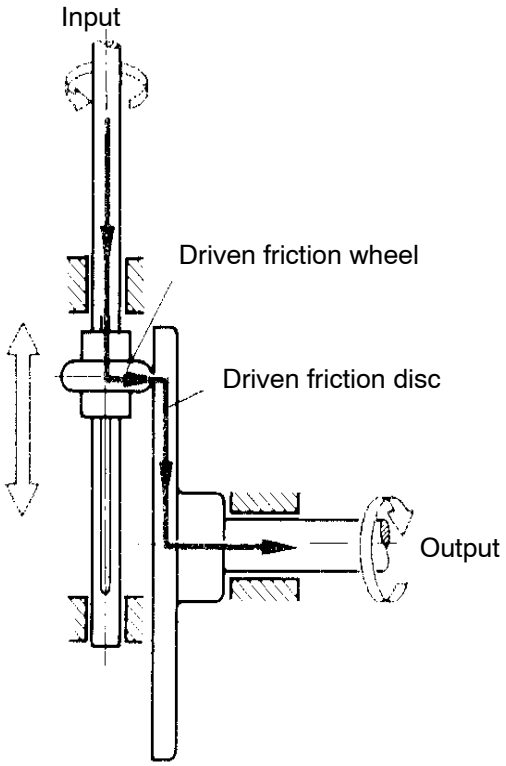

FRICTION GEAR DRIVE

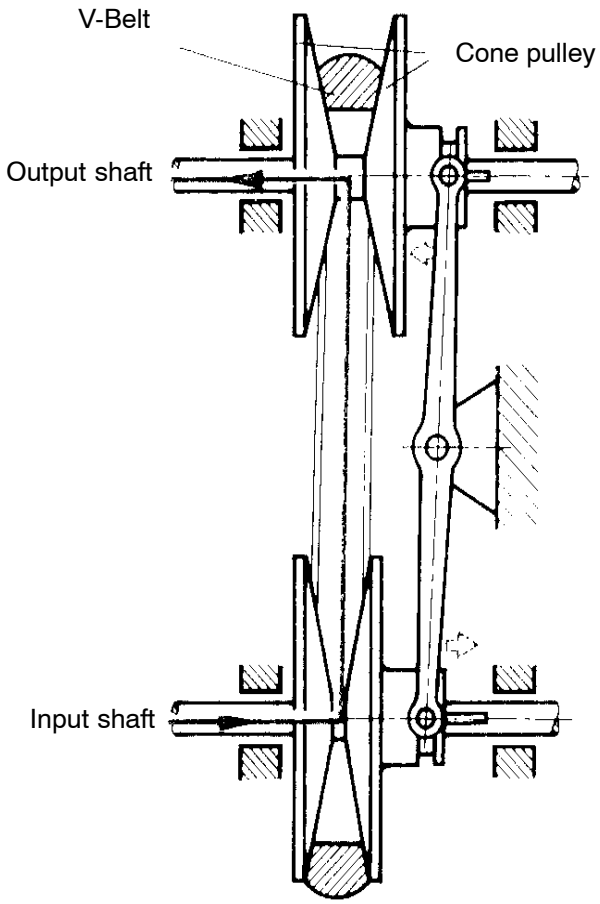

CONE PULLEY DRIVE

Figure 198 Friction Gear and Cone Pulley Drive

FOR TRAINING PURPOSES ONLY!

© Lufthansa Technical Training

Transmission Components Control Mechanism

General

The structural elements of power transmission within control mechanisms must meet the following requirements:

- safe
- lightweight
- movement free from play.

Cables

Cables are the primary transmission components in airplanes without “fly by wire“ systems. Cables are versatile, offer movement free of play, problem-free transmission on a weight-saving basis and can thus be routed into almost every area via guiding pulleys.

It has to be regarded as a disadvantage that cables can only transmit pulling forces. Cables are connected by turnbuckles. Clips secure the turnbuckles. By twisting the turnbuckles the tension of the cables is changed.

FOR TRAINING PURPOSES ONLY!

© Lufthansa Technical Training

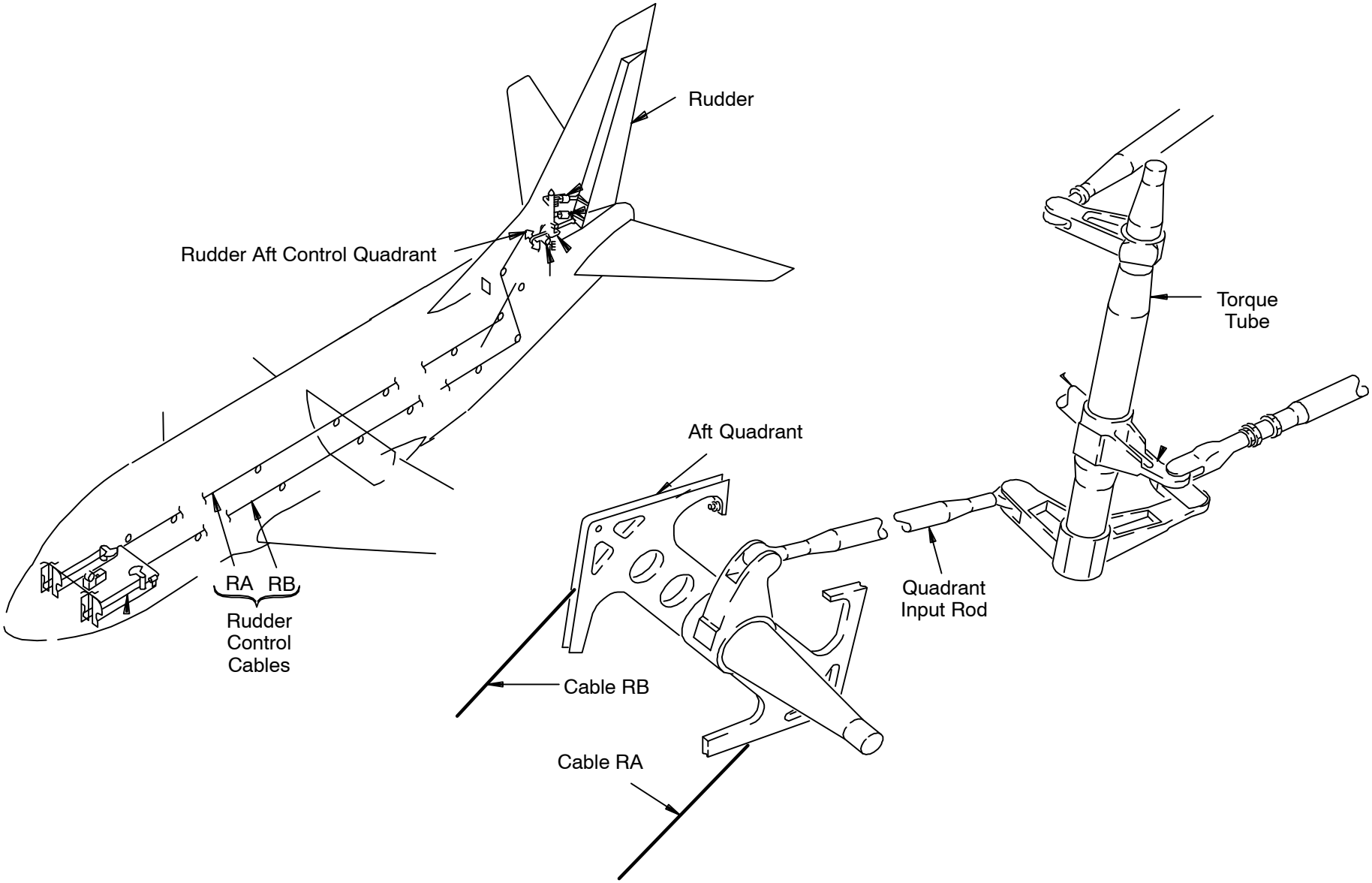

Figure 199 Control Mechanism

FOR TRAINING PURPOSES ONLY!

© Lufthansa Technical Training

Push Rods

General

Push rods are used to operate rudders, auxiliary rudders, flaps etc. Push rods can transmit pulling and pushing forces.

CAUTION: IF PUSH RODS ARE ADJUSTED, ENSURE THAT THE THREAD IS VISIBLE THROUGH THE CONTROL–HOLE.

Quadrants

General

Forces are transferred to cables via cable quadrants and the forces of the cables are also transmitted to push rods via cable quadrants.

FOR TRAINING PURPOSES ONLY!

© Lufthansa Technical Training

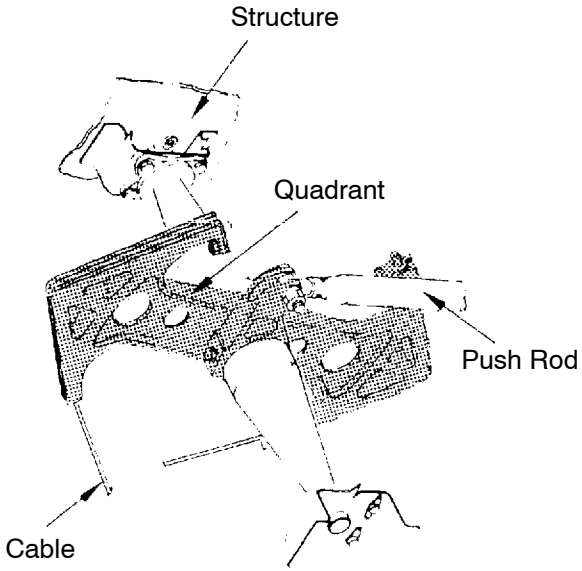

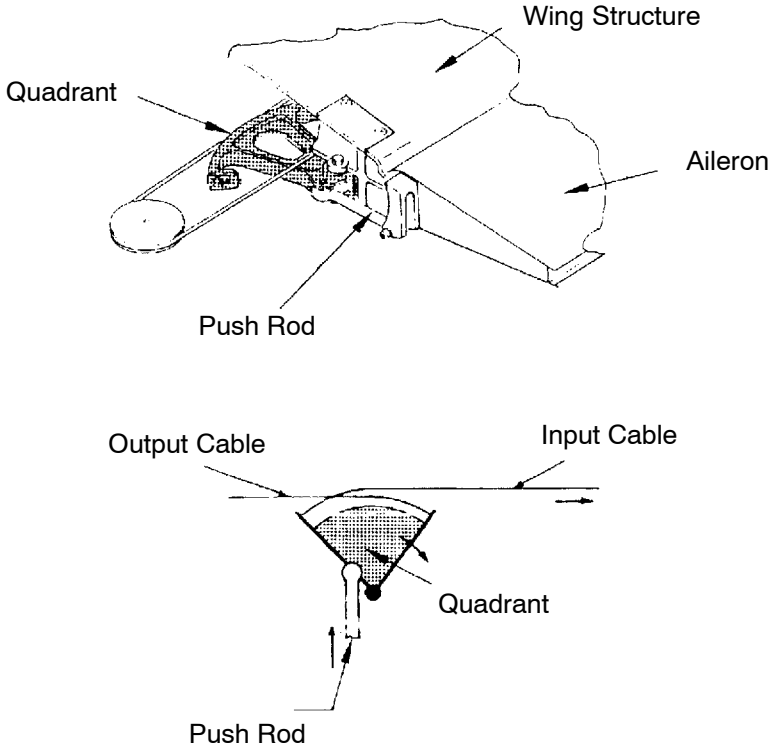

Figure 200 Push Rods and Quadrants

FOR TRAINING PURPOSES ONLY!

© Lufthansa Technical Training

Torque Tube Transmissions

General

Swinging or rotating movements are transmitted by torque tube transmissions.

FOR TRAINING PURPOSES ONLY!

© Lufthansa Technical Training

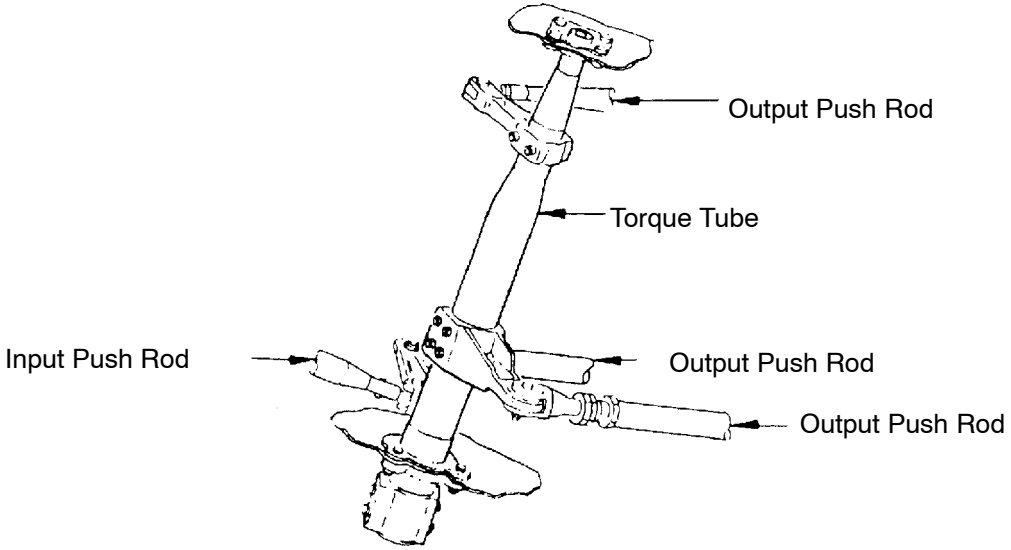

Torque Tube to transmit swinging movement

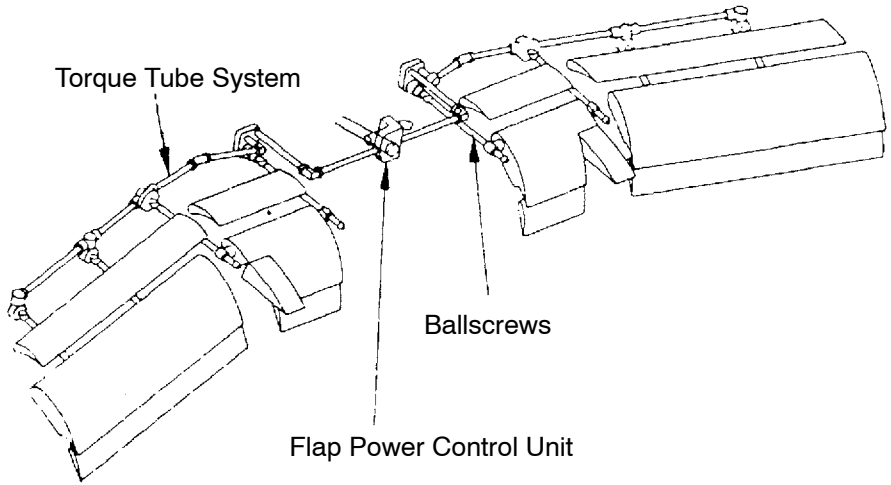

Torque Tube System to transmit rotary movement

Figure 201 Torque Tubes

FOR TRAINING PURPOSES ONLY!

© Lufthansa Technical Training

M6.10 CONTROL CABLES

TYPES OF CABLE, ENDFITTINGS, COMPONENTS, BOWDEN AND FLEXIBLE CONTROL SYSTEMS

Control Cables

Introduction

Cable lines have advantages over other mechanical actuators, such as linkages, shafts and chains, because of their lower weight.

Cable lines are used in many applications and can be routed into almost every space via guide pulleys or deflector rolls.

Handling, checking, adjustment and stretching are quite easy.

Cables used in airplane construction normally consist of individual cable wires with a minimum tensile strength of 1200N/mm^2 at a breaking elongation of 2 or 7%.

The steel wires are twisted into strands and these are twisted into cables. Normally the wires are twisted in one direction and strands the opposite.

Cable Denomination

The number of steel wires in one strand and the number of strands in one cable can be identified with the cable denomination:

- **3/32 - 7x7**

or

- **1/8 - 7x19**

In this calculation the fractional numbers stand for the diameter of the cable in inch. The diameter description in the partnumber is done in 1/32 inch.

The first figure shows the number of strands in the cable, the second one shows the number of wires in one strand.

FOR TRAINING PURPOSES ONLY!

© Lufthansa Technical Training

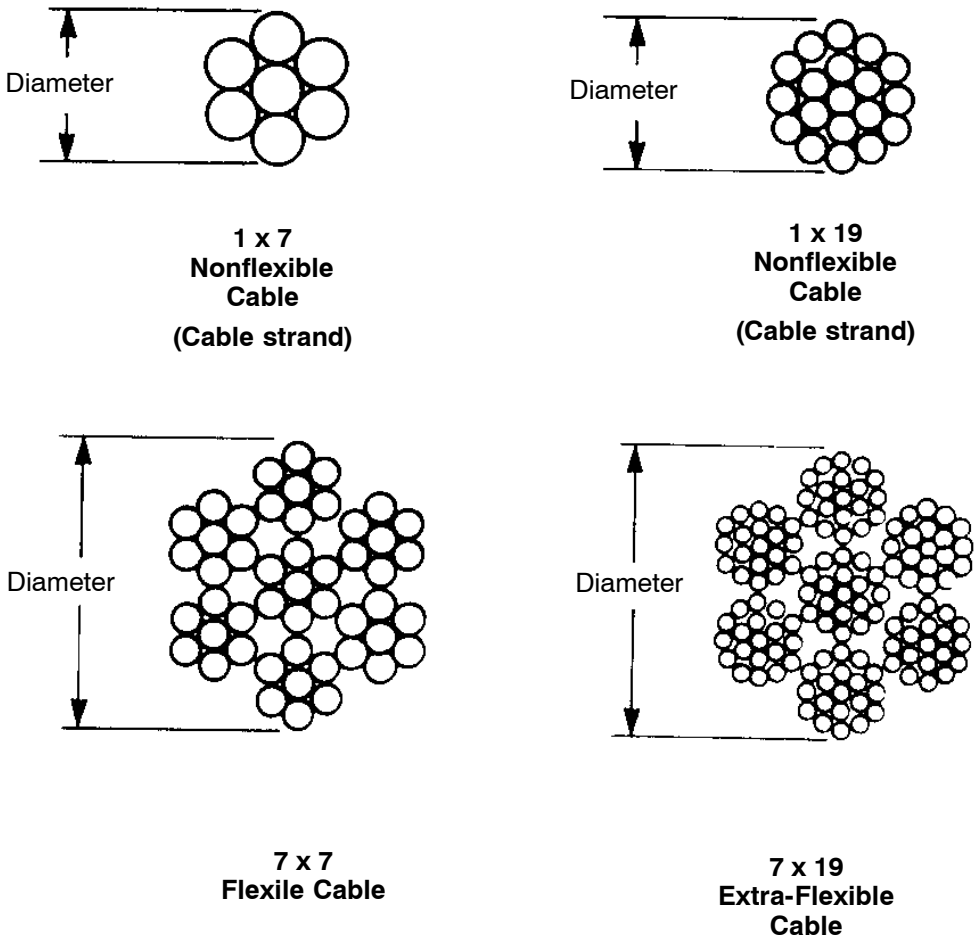

Figure 202 Build-Up of Cables

FOR TRAINING PURPOSES ONLY!

© Lufthansa Technical Training

Cable Terminals

Introduction

Metal cable terminals are swaged on the end of a cable by plastic deformation of their hollow shanks.

Terminal Types

There are a number of different cable terminal types:

- Ball (single or double shank)
- Stud end (short or long thread)
- Fork end
- Eye end

FOR TRAINING PURPOSES ONLY!

© Lufthansa Technical Training

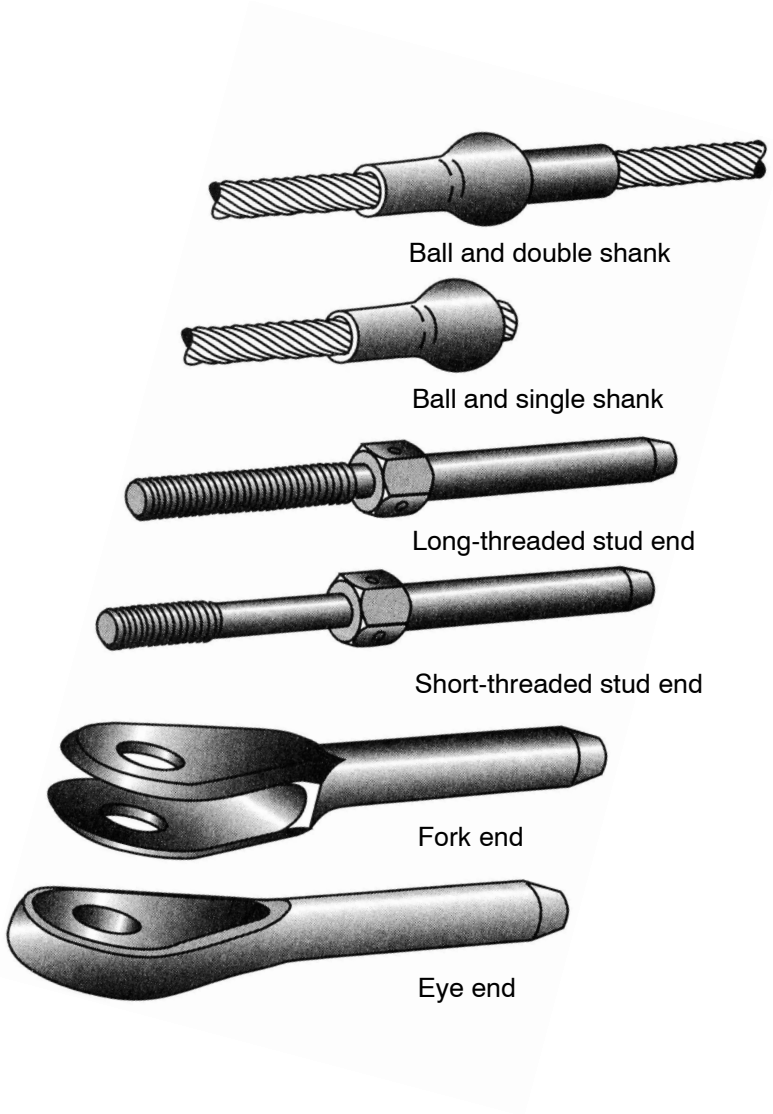

Figure 203 Cable Terminals

FOR TRAINING PURPOSES ONLY!

© Lufthansa Technical Training

Control Cable (System Components)

Fairleads

Fairleads are used to guide control cables to prevent contact with the aircraft structure.

Pressure Seals

Where control cables pass through pressure bulkheads, pressure seals are used. The seals are filled with different greases and allow the cable to pass freely whilst preventing the loss of pressurization air.

Pulleys

Pulleys are used in control cable runs to effect a change in direction.

FOR TRAINING PURPOSES ONLY!

© Lufthansa Technical Training

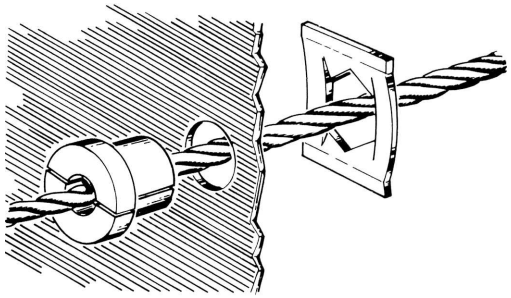

split fairlead

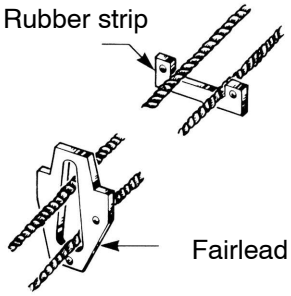

Solid fairlead

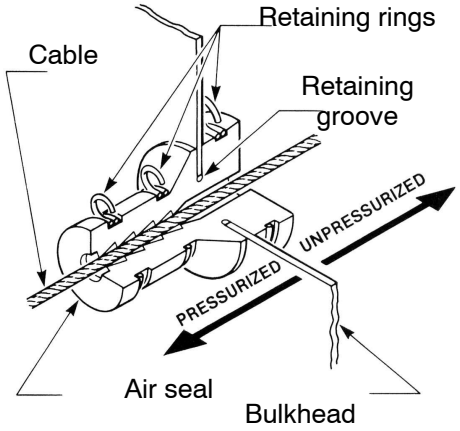

Pressure seal

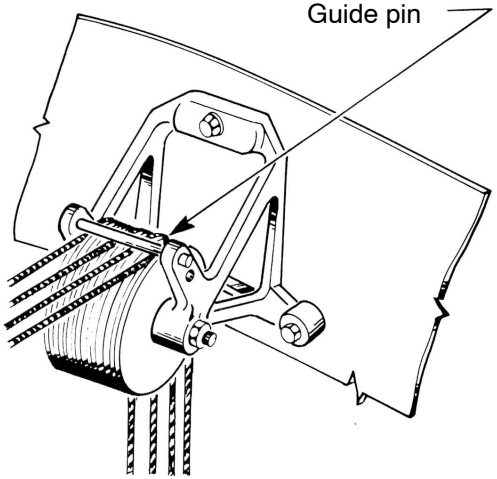

Pulley

Figure 204 Elements of the Cable System

FOR TRAINING PURPOSES ONLY!

© Lufthansa Technical Training

Turnbuckles

Introduction

Change in cable tension is effected by turnbuckles.

There must be none or not more than three (depends on the aircraft manufacturer) threads exposed at either end of the turnbuckle barrel and the turnbuckle must never be lubricated.

Cable Tensioning

Cables have to be tensioned during assembly according to the specification in the AMM.

Large aircraft have a complex automatic cable tensioning system to maintain tension relative as the aircraft expands and contracts due to ambient air temperatures. This system is called Cable Tension Regulator.

Small aircrafts do not have a Cable Tension Regulator that is why the cable tension is a mean value.

Locking

The locking of turnbuckles can be done with locking wire or locking clips.

Locking clips can only be used if the terminals and the turnbuckle have adequate grooves. When the tension is correctly adjusted, the two-piece clips are inserted from the input side into the grooves of the turnbuckle. The others sides of the clips are inserted into the middle of the turnbuckle and locked.

There are different ways to use locking wire. They have to be used according to the aircraft manufacturer. Always use the specified locking wire.

Information about the locking of turnbuckles can for example be found in the AMM, ATA-chapter 20 (Standard Practices).

FOR TRAINING PURPOSES ONLY!

© Lufthansa Technical Training

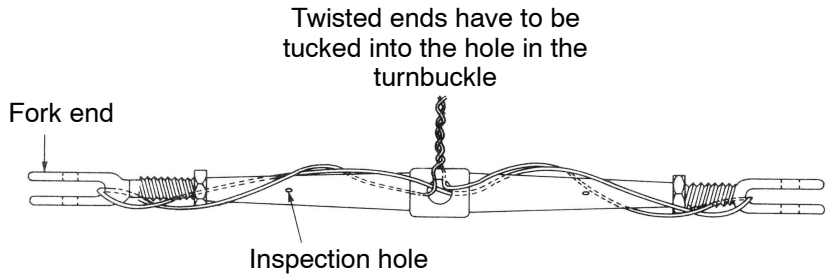

Wire locking of turnbuckle with fork end fittings

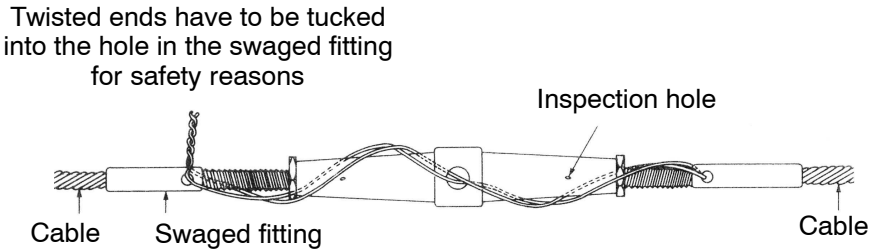

Wire locking of turnbuckle with swaged end fittings

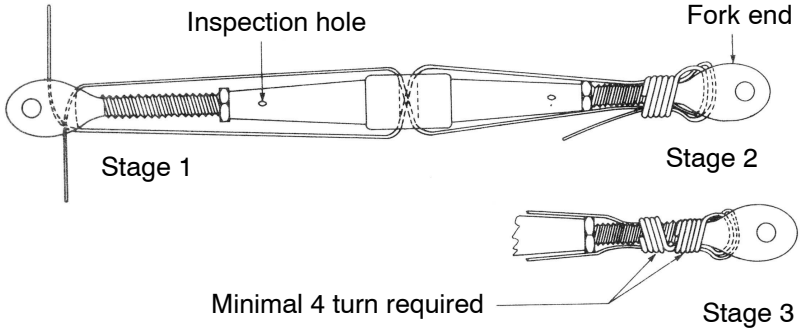

Alternative method of wire locking of turnbuckle with swaged end fittings

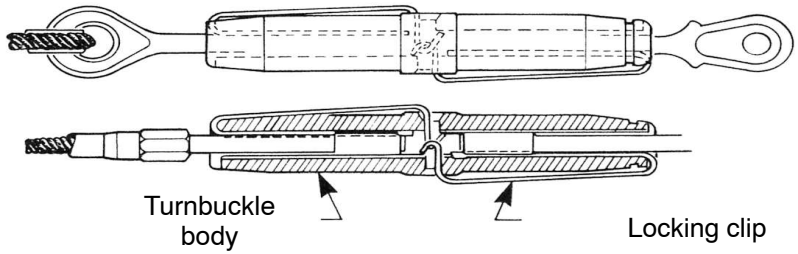

Turnbuckle locking with clips

Figure 205 Locking of Turnbuckles

FOR TRAINING PURPOSES ONLY!

© Lufthansa Technical Training

Cable Tension Regulator

A cable tension regulator ensures that the tension in a cable system is kept roughly constant at different temperatures.

A cable tension regulator consists of:

- 2 quadrant halves mounted on a common axle,
- a spring loaded cross head mounted on a guide, and
- pull rods.

FOR TRAINING PURPOSES ONLY!

© Lufthansa Technical Training

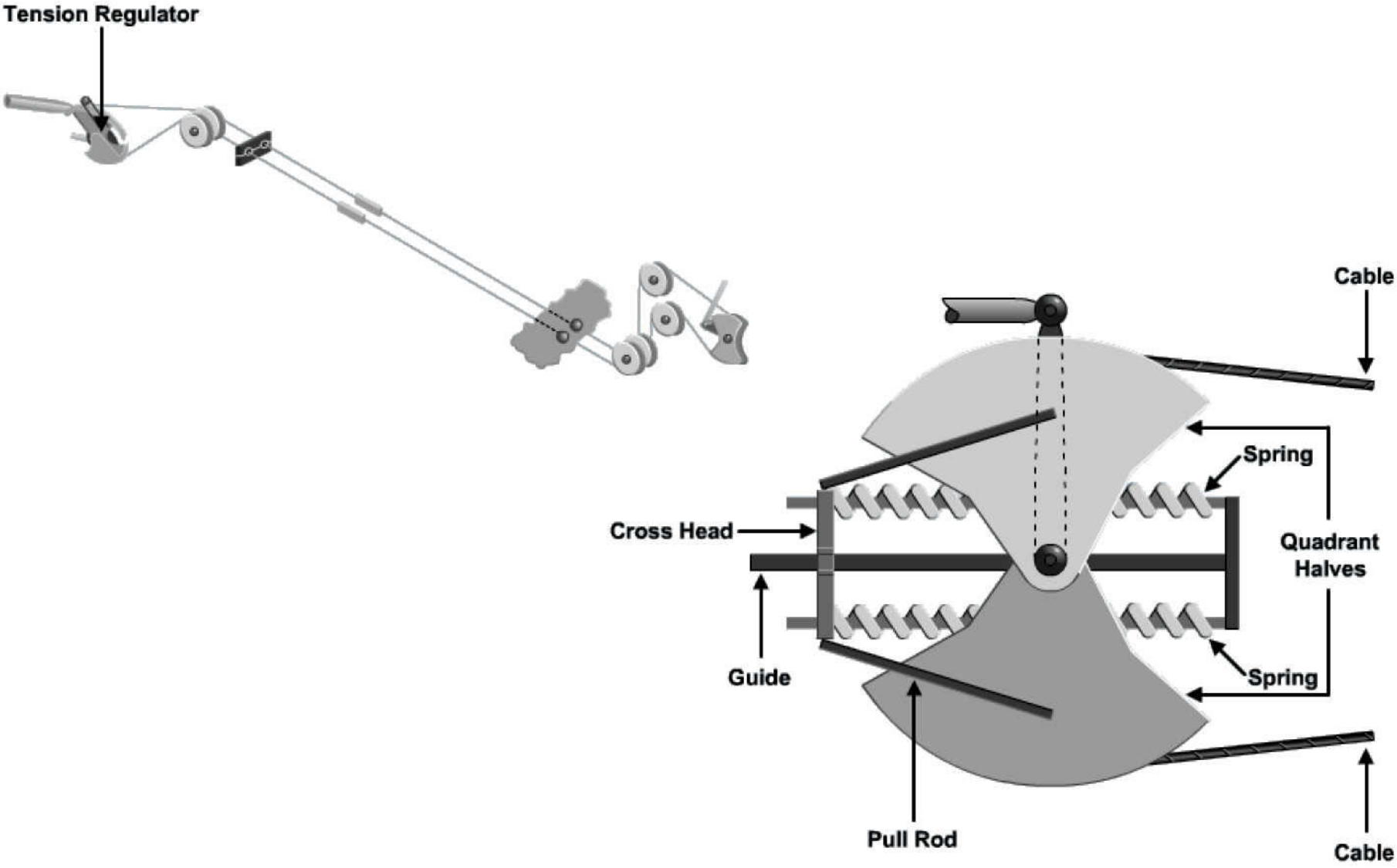

Figure 206 Cable Tension Regulator

FOR TRAINING PURPOSES ONLY!

© Lufthansa Technical Training

Flexible Control Systems

Introduction

Manually-operated remote controls are installed in aircraft to operate, from the flight deck, such components as trim tabs, brake control valves and engine controls.

They can also be adapted for other uses such as the indication of landing gear movements, position of flaps etc.

Control Methods

Chains, sprockets, pulleys, cable, levers and rods are used for remote control, but advantage may be gained by the use of a cable and conduit since the control can be bent to pass through the structure.

Cable and Conduit

Cable and conduit is relatively lightweight and installation is simple compared with other methods of control transmissions.

Teleflex und Bowden cables

Teleflex und bowden cables are typical methods for cable and conduit control. The principle is in each case the same. The cable is passing through a protective compression proofed covering (conduit) and is fitted with appropriate terminals at each end. The conduit is fixed at both ends. This enables a bend conduit, which would not be the case without the fixtures because a tensile-loaded cable always tries to follow straight lines.

FOR TRAINING PURPOSES ONLY!

© Lufthansa Technical Training

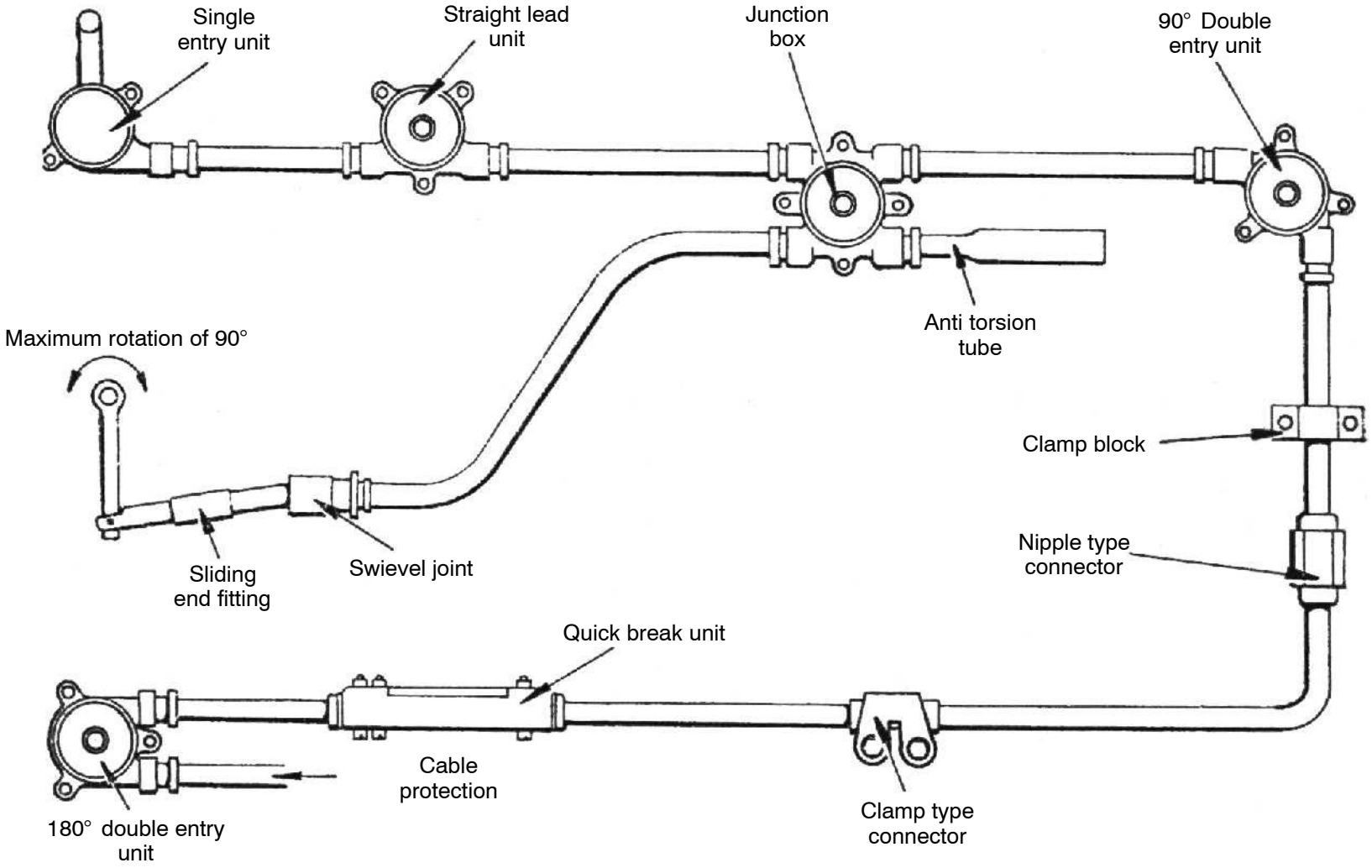

Figure 207 Typical Teleflex System

FOR TRAINING PURPOSES ONLY!

© Lufthansa Technical Training

TELEFLEX CONTROLS (CONT.)

Cables

The cable consists of a tension wire wound either with a continuous left- or right-hand helix winding which engages with the teeth of gear wheels at the transmitting and receiving ends of the control run.

The helix winding may also be used as a thread by which various end fittings can be attached to the cable.

The cable is designed for transmitting tensile and compressive loads.

There are two types of cable in use:

16. **No 2 Cable**. This cable is built up from a high-tensile steel wire which is wound with a compression winding. The latter is wound with a left-hand helix winding which is pitch-spaced by a spacer winding. The cable is 3/16“ diameter.
17. **No 380 Cable**. This cable is built up from a high-tensile steel wire which is wound direct with a right-hand helix winding and spacer winding. In this method of construction there is improved efficiency and a reduction in backlash, particularly when the cable is under compression. The cable is 3/16“ diameter.

NOTE: Because of the difference in the lay of the cables (left-hand and right-hand) they are not interchangeable. **E.g.** a no 2 cable must be used with a no 2 transmitting unit.

Conduits

The rigid conduits normally used in aircraft are built up out of Aluminium alloy, for special purposes out of steel. They may be bent in smooth curves to radii of not less than 3 inches.

Where there is relative movement between conduit and component, flexible conduit may be fitted, but to avoid backlash only the minimum length should be used. Flexible conduit may be bent to a radius of not less than 39 inches.

NOTE: Support must be given to bent portions of the conduit, but clamp blocks, spaced 3 ft (1 meter) apart, should be used to secure straight portions to the airframe.

Sliding End Fittings

These are used as an alternate to wheels where it is not necessary to convert the pull-push movement of the cable into a rotary movement.

Various types of sliding end fitting are available, each comprising a guide tube terminating in a fork, eye, ball joint or an internal or external threaded fitting.

The cable is attached to the end fitting by means of a special collet attachment or by means of a lock spring and plug.

FOR TRAINING PURPOSES ONLY!

© Lufthansa Technical Training

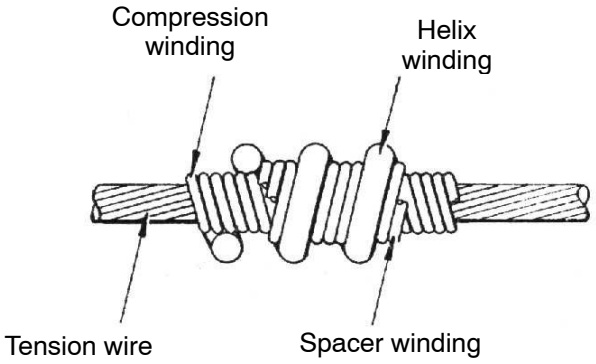

Cable No 2

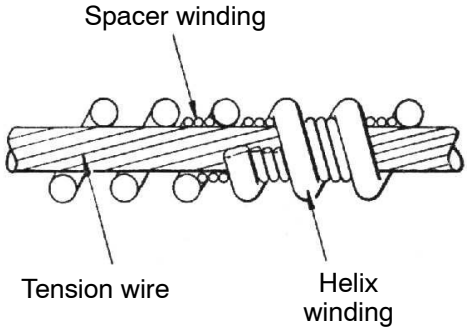

Cable No 380

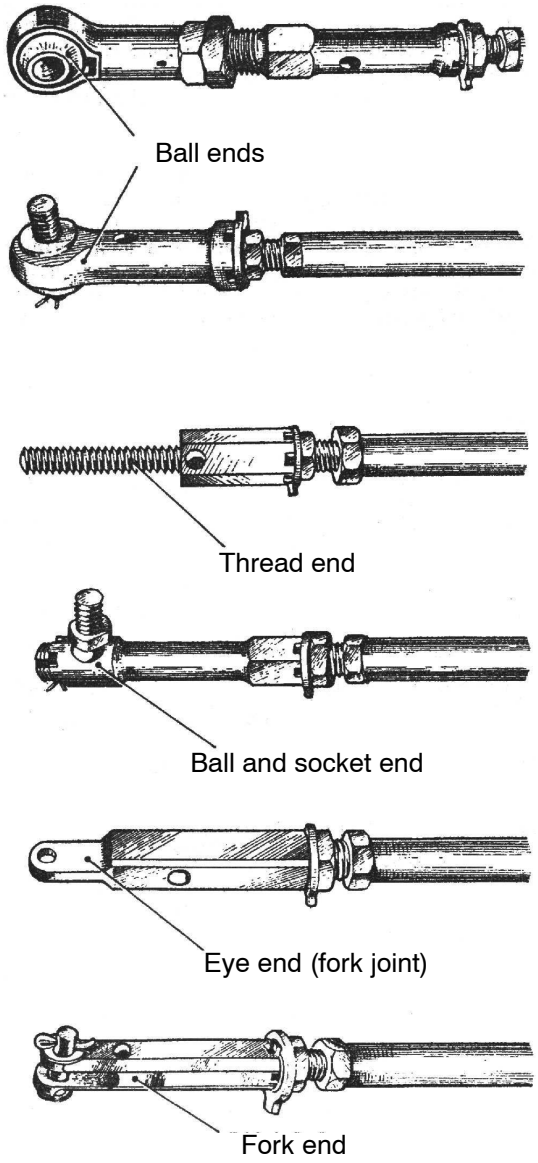

Figure 208 Types of Teleflex Cable and Typical Sliding End Fittings

FOR TRAINING PURPOSES ONLY!

© Lufthansa Technical Training

TELEFLEX CONTROLS - COMPONENTS

General

The transmitting end of a control is usually fitted with a wheel unit consisting of a hand-operated gear wheel enclosed in a housing

Alternatively, where the control loading is light and the control run fairly straight, a pull-push operating handle can be used.

At the remote end, the cable operates an appropriate wheel unit or is coupled, by means of a sliding end fitting, direct to the actuating mechanism on the component being controlled.

Swivel joints are also provided to take up the angular movement of an actuating lever at the end of a control run.

Single-Entry Unit

In this wheel unit the cable enters the unit by means of a conduit connector and is led into a slot in the gear wheel. The rotary travel of the unit is limited to 270° of travel of the gear wheel and a minimum of 40° engagement must be maintained at all times between the gear wheel teeth and the cable.

Double-Entry Unit

Where greater travel than can be obtained with a single-entry unit is required, a double-entry unit may be used. In this wheel unit the cable enters the unit by means of a conduit connector and, after wrapping round the gear wheel, emerges via another conduit connector at a point 90°, 120° or 180° from the point of entry. The end of the cable that emerges from the unit may be accommodated in a short length of conduit known as a spent travel tube.

Anti-Torsion Tube

It is sometimes necessary to prevent the control cable from turning in the conduit and so altering the relative adjustment. This is done by installing an oval-sectioned anti-torsion tube in place of a spent travel tube. This tube serves as a guide to an oval ferrule secured to the spent travel end of the cable.

Straight-Lead Unit

In this unit the cable passes straight through and consequently engages on only a few teeth of the gear wheel. Therefore, these units are not suitable for heavily-loaded controls. It can be interposed in a control run or fitted at the transmitting or receiving ends of a control.

Junction Box Unit

These are installed where it is necessary to reverse the direction of travel of the control cables, or to branch a run of cable so as to operate two components (eg on both port and starboard sides of the aircraft). In one type the box contains a gear wheel and provision is made for two cables to pass through the box, one on either side of the gear wheel. The gear wheel may be rotated to move both cables, or one cable may operate the gear wheel which in turn operates the other cable.

Swivel Joints

This can be installed where rotary movement of the control lever at the receiving end does not exceed 90°. This type of joint consists of a ball and socket connection inside a housing attached to the end of the rigid conduit. The housing must be rigidly secured to the aircraft structure. The ball is welded to a length of tubing of the same size as the conduit. A suitable sliding end fitting is attached to the end of the control cable so that the guide tube slides freely over the swivel joint tube.

FOR TRAINING PURPOSES ONLY!

© Lufthansa Technical Training

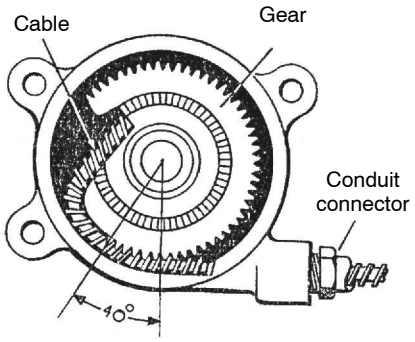

Single entry unit

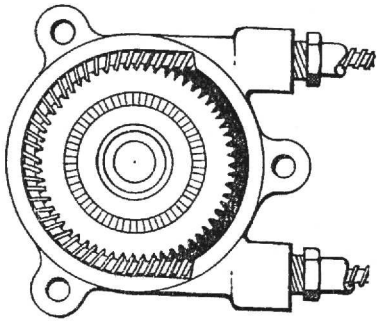

Double entry unit

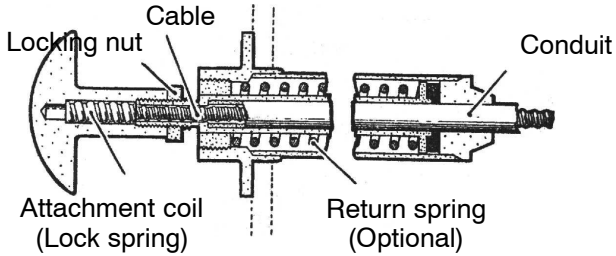

Push-Pull control unit

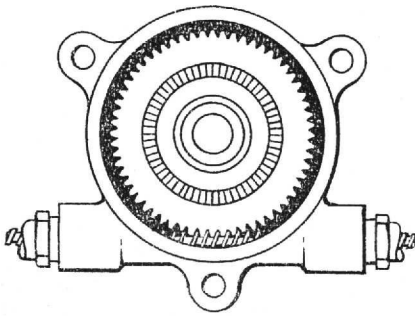

Straight lead unit

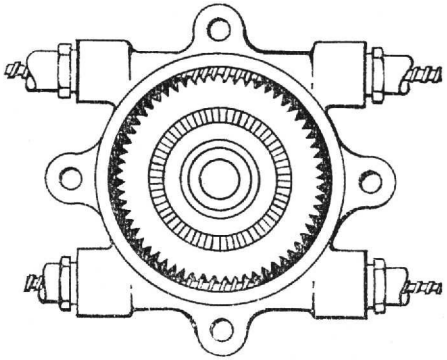

Junction box unit

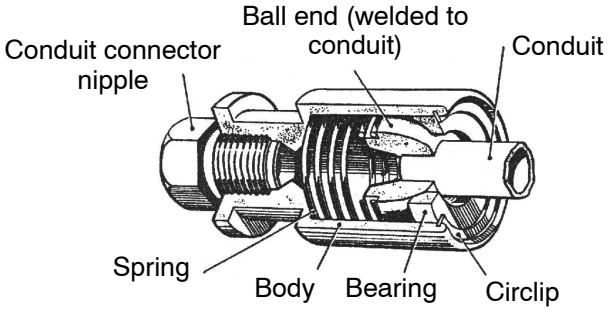

Swievel joint

Figure 209 Teleflex System: Components

FOR TRAINING PURPOSES ONLY!

© Lufthansa Technical Training

TELEFLEX CONTROLS - COMPONENTS (CONTD.)

Torsion Drive

In certain installations the final linear movement of the control is converted to rotary action by the use of a distributor box coupled, via a torsion drive, to the component to be operated. The torsion drive is similar to a normal flexible drive.

Distributor Box

This is similar in construction to a receiver unit with a gear wheel attached to the face of the cable gear wheel. The attached gear wheel drives a pinion on a cross shaft which engages with one or two tongue ends of the torsion drive cable.

To convert the rotary motion of the torsion drive to the linear movement a sprocket-driven screw jack may be used.

Vibration damper prevent the jamming of gears and the blocking of control elements. This device consists of a spring-loaded friction plate pressed against the gear wheel.

FOR TRAINING PURPOSES ONLY!

© Lufthansa Technical Training

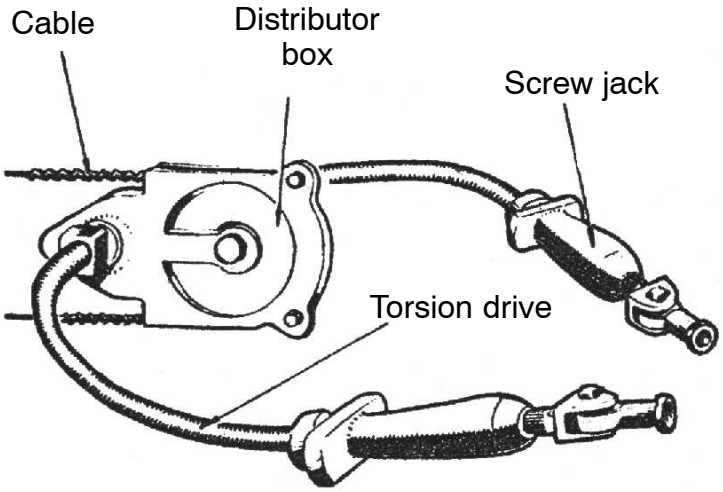

Figure 210 Teleflex Distributor Box and Torsion Drive

FOR TRAINING PURPOSES ONLY!

© Lufthansa Technical Training

TELEFLEX CONTROLS - COMPONENTS (CONTD.)

Conduit Connectors

Some conduit connectors are similar in construction to all-metal pipe couplings without an olive. The standard nipple-type connector consists of a screwed nipple that is threaded onto a rigid conduit, before the conduit is flared. The nipple is then screwed into a wheel unit or conduit connector body, thus retaining the conduit secure against a shoulder in the internally-threaded connection hole.

Another type of conduit connector, termed a **clamp connector**, consists of a split block bored out to house the unflared ends of a conduit. The conduit is gripped by tightening two clamping bolts, and is located by two bifurcated pins.

Quick-Break Units

Quick-break units of various types are installed in control runs to facilitate removal of components without disturbing the control. The cable joining fittings are similar in all types of quick-break unit and consists of rods machined with interlocking slotted ends attached to the ends of the cables.

Servicing

Servicing of the control system consists of checking its operation, examining for wear and damage, renewing defective parts and periodical lubrication.

Stiff control movement may be caused by the following:

Probable Cause	Remedy
Damaged conduit.	(a) Flexible type - renew complete conduit. (b) Rigid type - cut out damaged portion and renew.
Kinked cable.	Renew cable.
Lack of lubricant in conduit.	Dismantle end fittings and remove the cable from the conduit. Smear the cable with high-altitude grease and re-assemble.
Bent sliding end fitting.	Remove sliding tube from end of cable and test for freedom. If stiff, fit new parts. Check alignment of swivel joint (if fitted).
Fouling between end fitting and airframe due to damage or faulty installation.	Renew damaged parts and reset the assembly.
Worn wheel unit gear wheel, allowing cable to override.	Renew wheel unit.
Jammed swivel joint.	Dismantle, clean, assemble and test. If unsatisfactory, renew swivel joint.

FOR TRAINING PURPOSES ONLY!

© Lufthansa Technical Training

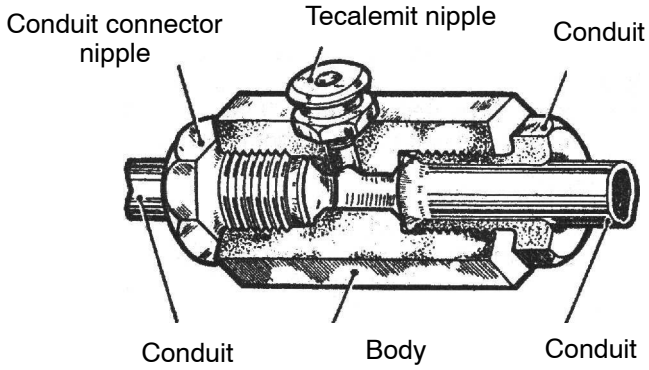

Nipple type connector

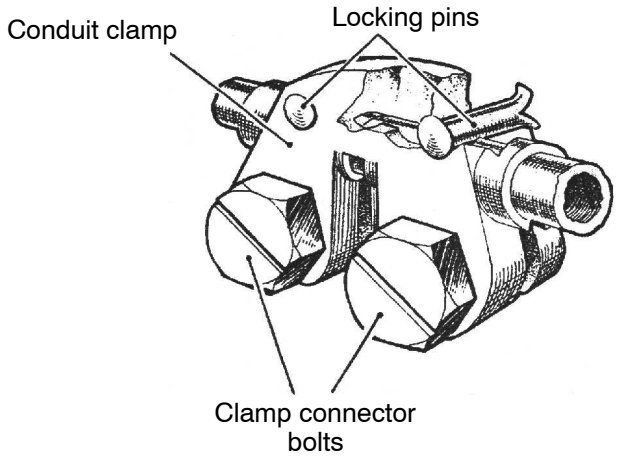

Cmap type connector

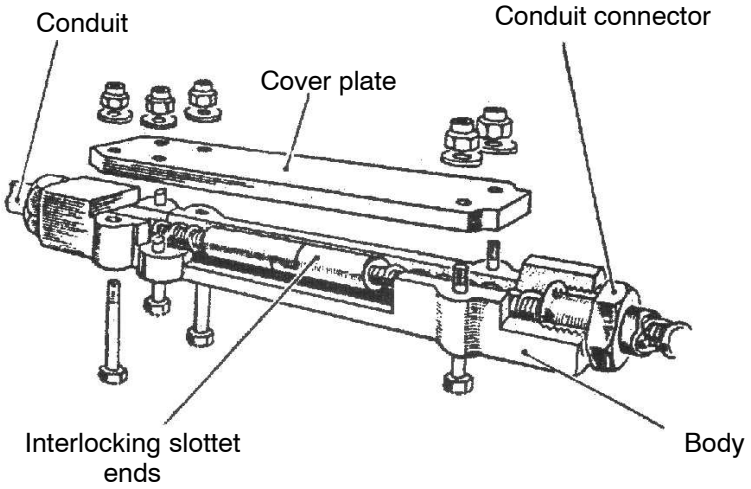

Typical quick-break unit

Figure 211 Teleflex Conduit Connectors

FOR TRAINING PURPOSES ONLY!

© Lufthansa Technical Training

TELEFLEX CONTROLS - INSTALLATION

Installation of conduit

Rigid conduit must be clean, free from dents and deformations and reasonably straight. When renewing a conduit, never use conduit that has been previously bent for some other part of the system. After fitting the cable in the conduit, it should be possible to work the cable backwards and forwards by hand. If this is not possible, the run of conduit has not been installed properly. Damage to rigid conduit may be repaired by inserting a new length of conduit and making the connection by use of a connector. Bending, if necessary, should be done by use of a bending machine, or by using a special hand bender. Flexible conduit, if damaged, must be completely renewed.

Conduit Connectors

When tightening a nipple type connector, two spanners should be used to prevent twisting of the conduit. If there is any end play between the conduit and the body of the connector after tightening, dismantle the connection and check the flare on the conduit; flaring of a conduit should be done only with the special flaring tool provided.

When fitting a clamp type connector, the ends of the two lengths of conduit must be square and unflared. To fit the connector, remove the locking pins and slacken off the clamping bolts. Slide the two lengths of conduit into the connector and ensure that the ends butt centrally in the transverse slot, then tighten up the clamping bolts. Insert a drill of the correct size through the locking pin holes. Operate the drill which will cut half way through the wall of the conduit. Insert the bifurcated locking pins and open out their legs. The correct size drill is 3/32 in dia for No. 2 and No. 3 conduits.

Wheel Units

To fit the cable into the single entry unit, tuck it into the slot in the gear wheel and ensure that the cable helix engages with the gear wheel teeth to give a wrap of at least 40°. On double entry units, the cable should engage with the gear wheel correctly and project through the lead out hole throughout the travel of the control. Ensure that the cable end, when fully extended, does not foul the blanked end of the spent travel tube. All wheel units should be packed with high altitude grease.

Cable

The cable must be kept clean, free from kinks and well lubricated. If dirty, it may be cleaned in kerosene, wiped dry with a non−fluffy cloth and re lubricated. A cable that has been damaged, strained or over heated, must be renewed. The method of fitting a new cable is as follows:

- Assemble the conduit in position.
- Cut the cable 2 inches (5 cm) in excess of requirements.
- Fit the cable into the unit and engage with the transmitting end fitting.
- Assemble the receiving end fitting and mark the required length of cable.
- Remove the cable from the conduit and cut to length.
- Replace the cable and, at the same time, smear the cable with high altitude grease as it enters the conduit.
- Connect the cable to the end fittings and check for freedom of movement and range of movement.
- Ensure that all fittings are in safety and correctly locked. Lubricate, as necessary.

Sliding End Fitting

To attach the cable to a sliding end fitting, unscrew the hexagon plug, screw the locknut right back and pass the cable through the plug, then proceed as follows:

- Screw the lock spring on to the end of the cable, so that about 3/16 in (two threads) of cable projects through the spring.
- Insert the cable end, with its lock spring, into the bore of the end fitting and screw the plug tight down. During this operation the end fitting must be prevented from rotating.
- Check that the free end of the cable is beyond the inspection hole, but not beyond the fork gap (fork end fittings only). If satisfactory, position the tab washer, tighten the locknut and lock with the tab washer.
- Check the distance from the face of the bore to the sliding tube which should not exceed 0.45 inches (12 mm). This ensures that the lock spring is tightly compressed.

FOR TRAINING PURPOSES ONLY!

© Lufthansa Technical Training

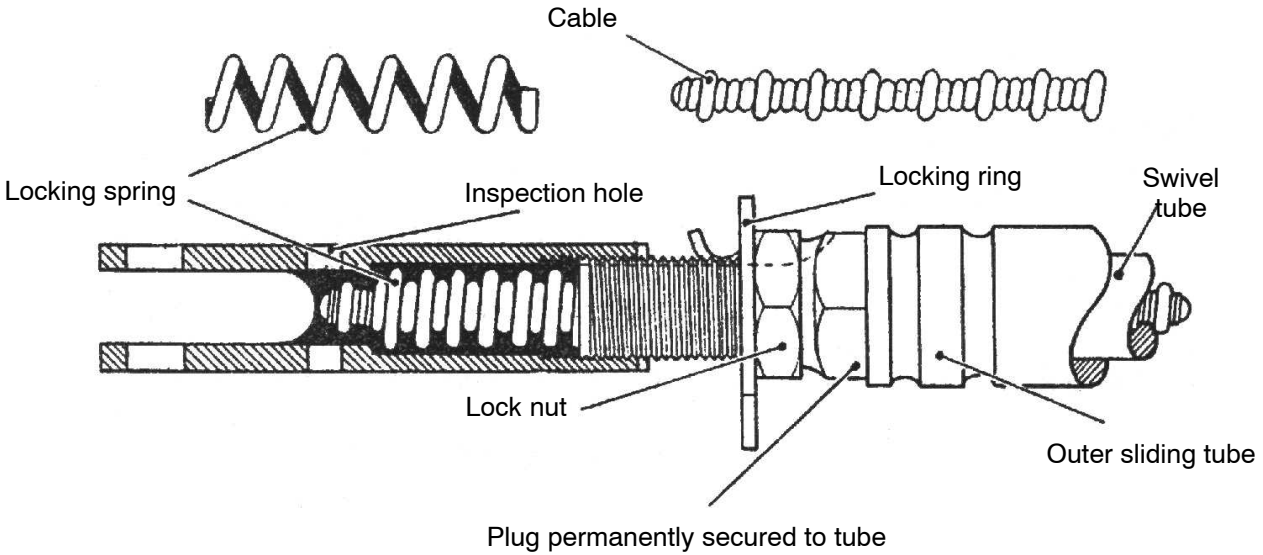

Figure 212 Assembly of Teleflex Sliding End Fitting

FOR TRAINING PURPOSES ONLY!

© Lufthansa Technical Training

Bowden Cables

Cable

This short run, lightly–loaded type of control has a cable made of non corrodible steel wire, which. is designed for ”pull” operation only. The counterforce to the pull force is provided by a spring.

Conduit

The conduit consists of a close coil wire, covered with cotton braiding and finished with a black waterproof coating. Caps are fitted on each end of the conduit to prevent the braiding from unravelling and to reinforce the end of the conduit. On some installations, rigid conduit is used to house the cable over straight runs.

Cable Nipples

When a control assembly is made up, the ends of the cable are threaded through brass nipples which are welded or swaged to the cable.

End Fittings

Various types of end fitting and connector are provided, each installation being designed to meet a specific requirement. Normally, the transmitting end of a control is fitted with a hand lever which engages with the nipple on one end of the cable. At the remote end, the cable passes through an adjustable stop and is connected to the component operating lever. To return the hand lever to the normal position after operation, the system is spring loaded either at the transmitting or receiving end of the control run.

Hand Lever

A typical hand lever is illustrated. If it is necessary to dismantle an existing control or to fit a new cable, unscrew the adjustment to slacken the cable, then rotate the nipple and slide the nipple and cable sideways to pass the cable through the end fitting slot.

FOR TRAINING PURPOSES ONLY!

© Lufthansa Technical Training

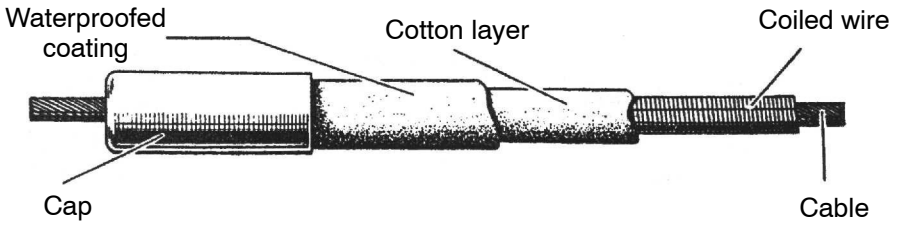

Cable and conduit

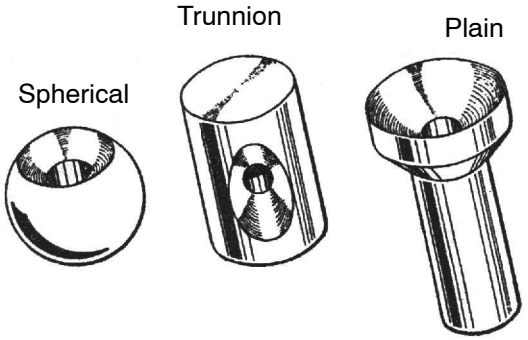

Different types of nipples

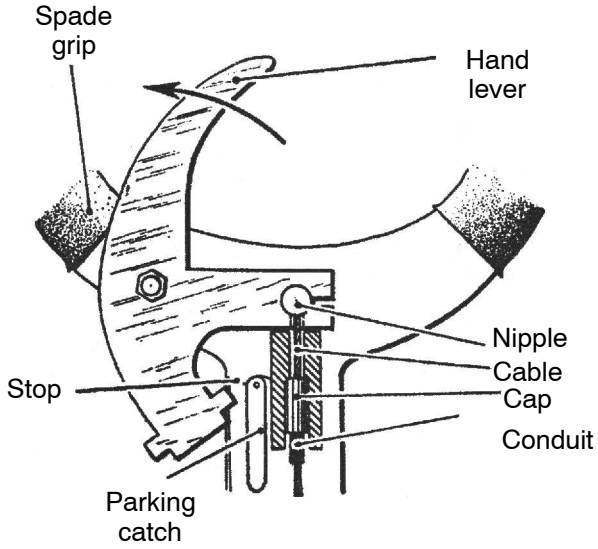

Typical hand lever

Figure 213 Bowden Control Components (1)

FOR TRAINING PURPOSES ONLY!

© Lufthansa Technical Training

BOWDEN CABLE (CONTD.)

Control System

The remote end of the cable usually passes through a plain stop and is attached to the component by the cable nipple. The plain stops, which may be fitted to both ends of the conduit, consist of hexagon headed screws drilled to allow the cable to pass through. The head of each screw is counterbored to receive the protective cap fitted over the end of the conduit. When the stop is fitted to the remote end of the conduit, it is mounted in a Tee barrel, which must be securely fixed to a rigid member of the airframe. Where it is inconvenient to fit plain stops at the ends of the conduit, a double ended stop may be fitted in the length of the conduit. The stops also enable the length of the conduit to be adjusted, thus altering the tension of the cable.

Connectors

Two types of connector are used. The cable connector is used for joining two cables without any cable forces. It is also used for joining a length of Bowden cable to a cable of a different type, such as may be used for long straight runs. The control connector is used for joining two Bowden controls, as illustrated.

Junction Box

A junction box is used for connecting a single cable to two others where there are two components to be operated by a single control.

FOR TRAINING PURPOSES ONLY!

© Lufthansa Technical Training

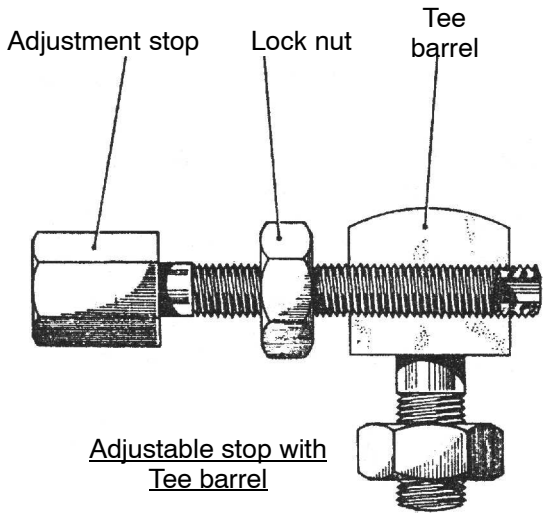

Adjustable stop with Tee barrel

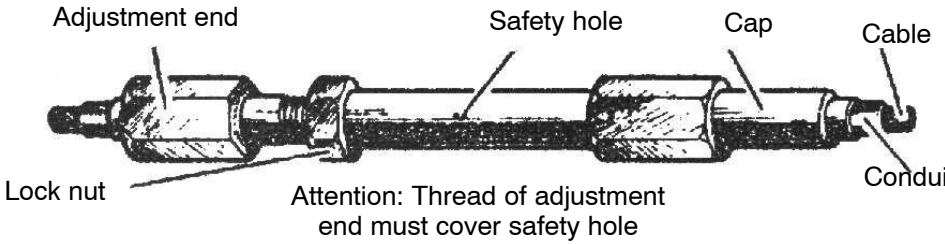

Double ended stop

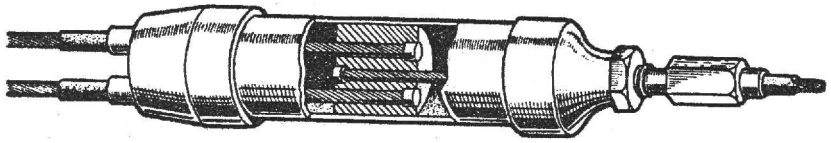

One incoming cable operates two outgoing cables (for spring return control)

Typical junction box



Cable connector

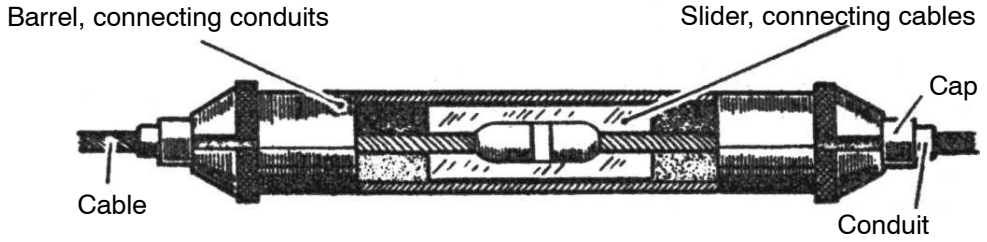

Control connector for cables and conduits

Figure 214 Bowden Control Components (2)

FOR TRAINING PURPOSES ONLY!

© Lufthansa Technical Training

BOWDEN CABLE (CONTD.)

Installation of a conduit

The conduit must be clean, free from kinks or distortion and not damaged. If damaged, the conduit must be renewed. Any bends in the conduit should be as large as possible. The minimum radius of bend is twelve times the diameter of the conduit. Where the cable is connected to a lever, the alignment should be such that the centre line of the conduit is in a straight line through the mid position of the rise and fall of the arc of travel of the lever. If this adjustment is not made, the cable may rub on the edge of the stop and be worn away. When the conduit has been correctly aligned, the Tee barrel forming the adjustable stop mounting must be securely locked in this position. This is important as, should the Tee barrel swivel, the control will be distorted. The control should be attached to the airframe by pliable clips. For controls longer than 2 ft (60 cm), the conduit should be supported every 12 in (30 cm). The conduit of a Bowden control should never be in tension.

Cable

Care must be taken when handling the cable to avoid kinking it, as this will cause the cable to work harshly in the conduit. The cable must be clean, free from fraying or corrosion and lubricated with graphited synthetic grease applied at room temperature 60-70°F (15 – 20°C). The grease must be well rubbed into the interstices of the cable.

Maintenance

The control should be inspected periodically as follows:

- Inspect the cable ends for fraying or other damage. Frayed cables must be renewed.
- Inspect the conduit for kinks and signs of wear, especially at bends and at the ends.
- If there is any slackness in the cable, screw out the conduit adjustment stops until the slackness disappears. After adjustment, make sure that all components are still in safety and securely locked.
- Operate the control lever over its full range and ensure that the spring returns the lever freely and smoothly to its stop.
- Check the security and locking of mountings and clips.

FOR TRAINING PURPOSES ONLY!

© Lufthansa Technical Training

THIS PAGE INTENTIONALLY LEFT BLANK

FOR TRAINING PURPOSES ONLY!

© Lufthansa Technical Training

CABLE TYPES, CONSTRUCTION AND CHARAKTERISTICS

M6.11 ELECTRICAL WIRING AND CABLES

In aircraft construction, a wire is an insulated braid.

Depending on the design, it can be tin–plated, nickel–plated or silver–plated. The braid consists of several wires twisted together.

Except for certain cases, rigid wires are not used in aircraft construction. A cable consists of several wires which are combined within another insulation.

Usually, a maximum of three wires combined form one cable of an aircraft; yet the exception proves the rule. Copper wiring is primarily used due to the overall best properties (conductivity, elasticity, costs).

Aluminium wiring is only used for reasons of weight reduction in generator systems and for bulk consumers (e.g. kitchens) and only if the area of application is not exposed to vibrations.

In the A380, Airbus uses a composite material, which consists of aluminium in the core and copper on the outside, which is also nickel–plated. The insulation of the wires is made of plastics such as polyvinyl chloride, nylon, Teflon, Kapton or Oasis–tape.

Depending on the designated use, the insulation has to be very resistant against:

- all kinds of fluids
- mechanical strains
- extreme temperature fluctuations.

In accordance to the rules of the aviation authority, wires and cables also have to be flame resistant and shall not evolve any toxic gases in the case of a fire.

In general, any wire integrated in an aircraft has to comply with a standard that was approved by the aircraft manufacturer. For example, the American Military Specification (MIL–W), the German DIN–Norm (LN) or the French NSA standard.

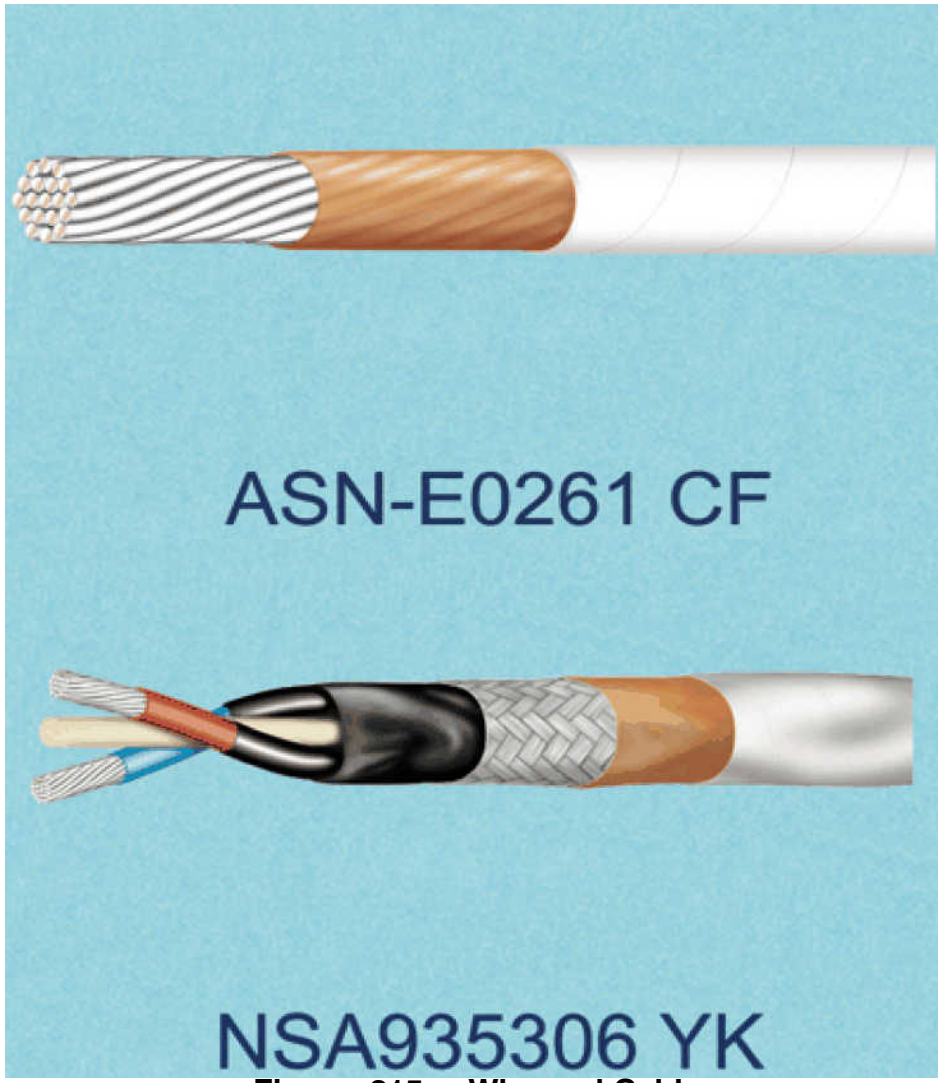

Figure 215 Wire and Cable

FOR TRAINING PURPOSES ONLY!

© Lufthansa Technical Training

Aluminium family : AD
Electrical aluminium cable ABS0949 (#24 to #4)
(-55°C to +180°C)

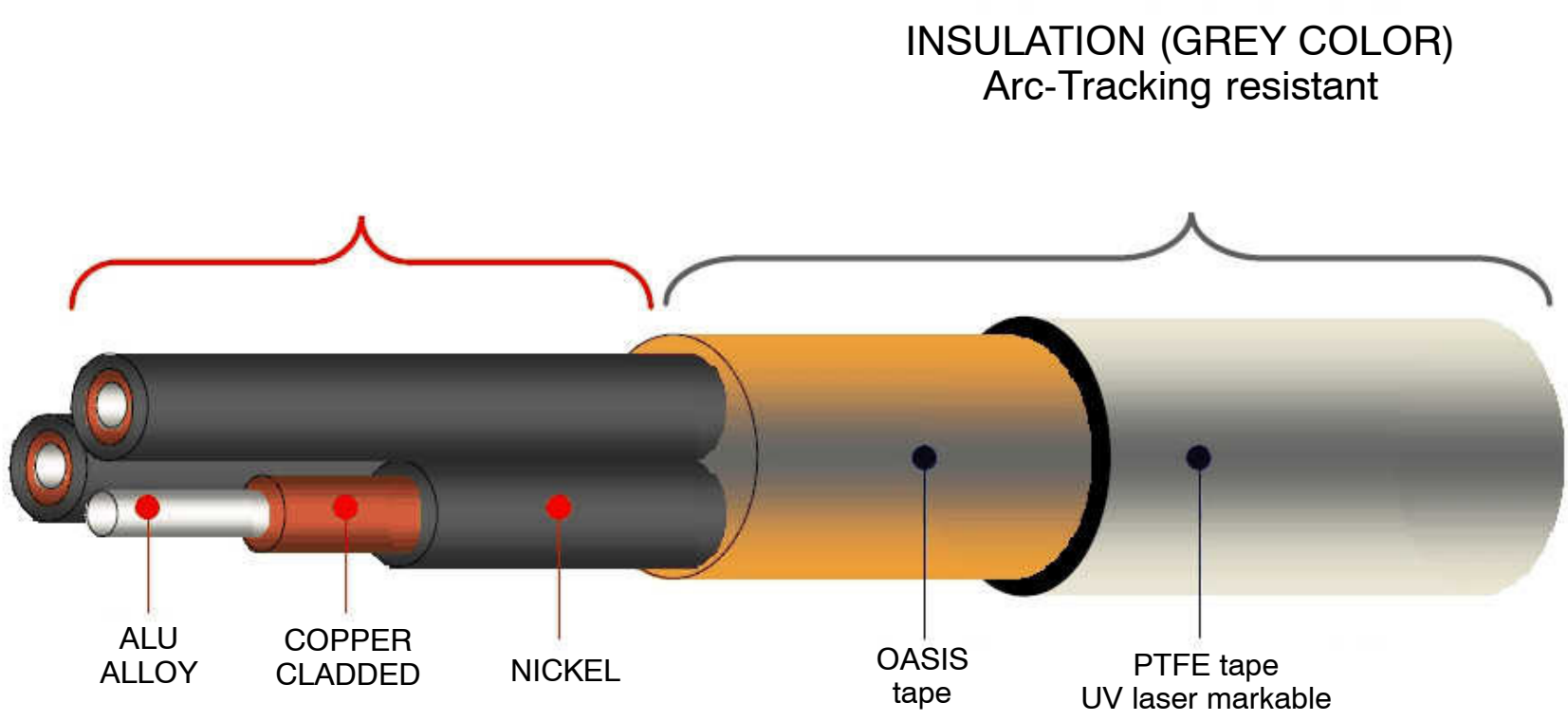

Figure 216 A380 Wire

FOR TRAINING PURPOSES ONLY!

© Lufthansa Technical Training

Shielding

Shielding is the sheathing of wires and cables with an electrically conductive material in order to prevent electromagnetic fields from either entering or escaping from wires and cables.

Data buses for instance are shielded in order to avoid alterations in the data words by inductive coupling.

The wires leading to spark plugs are shielded, for otherwise the high energy ignition pulses would lead to malfunctions in various aircraft systems.

The shielding of a wire or a cable has to be constantly connected to the potential of the signal source.

If the cable consists of several parts, the shieldings of these parts have to be connected.

If both ends of the shieldings would be connected to ground, possibly existing potential differences could cancel each other out by means of the shieldings and the flowing current could act magnetically on the signal line and distort the signal.

Thus, the shielding must only be connected to one side.

The exception to this are the ARINC 429 data buses; here it is important that the devices connected have the same ground potential because the logical zeros and ones are defined over specific voltage levels.

For this reason, shieldings in ARINC 429 data buses are connected at both sides of the system ground.

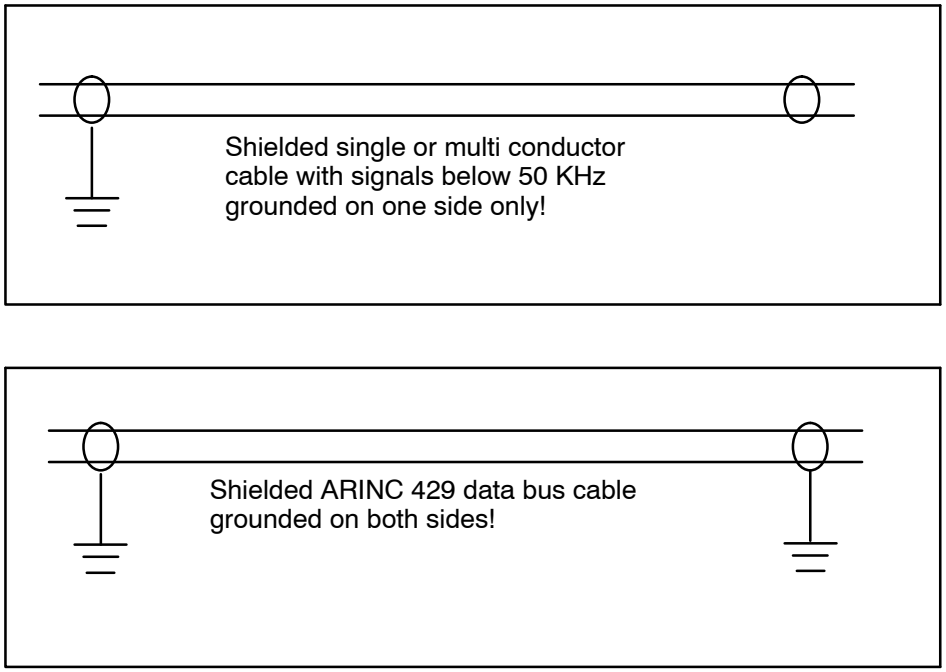

Figure 217 Shieldings

FOR TRAINING PURPOSES ONLY!

© Lufthansa Technical Training

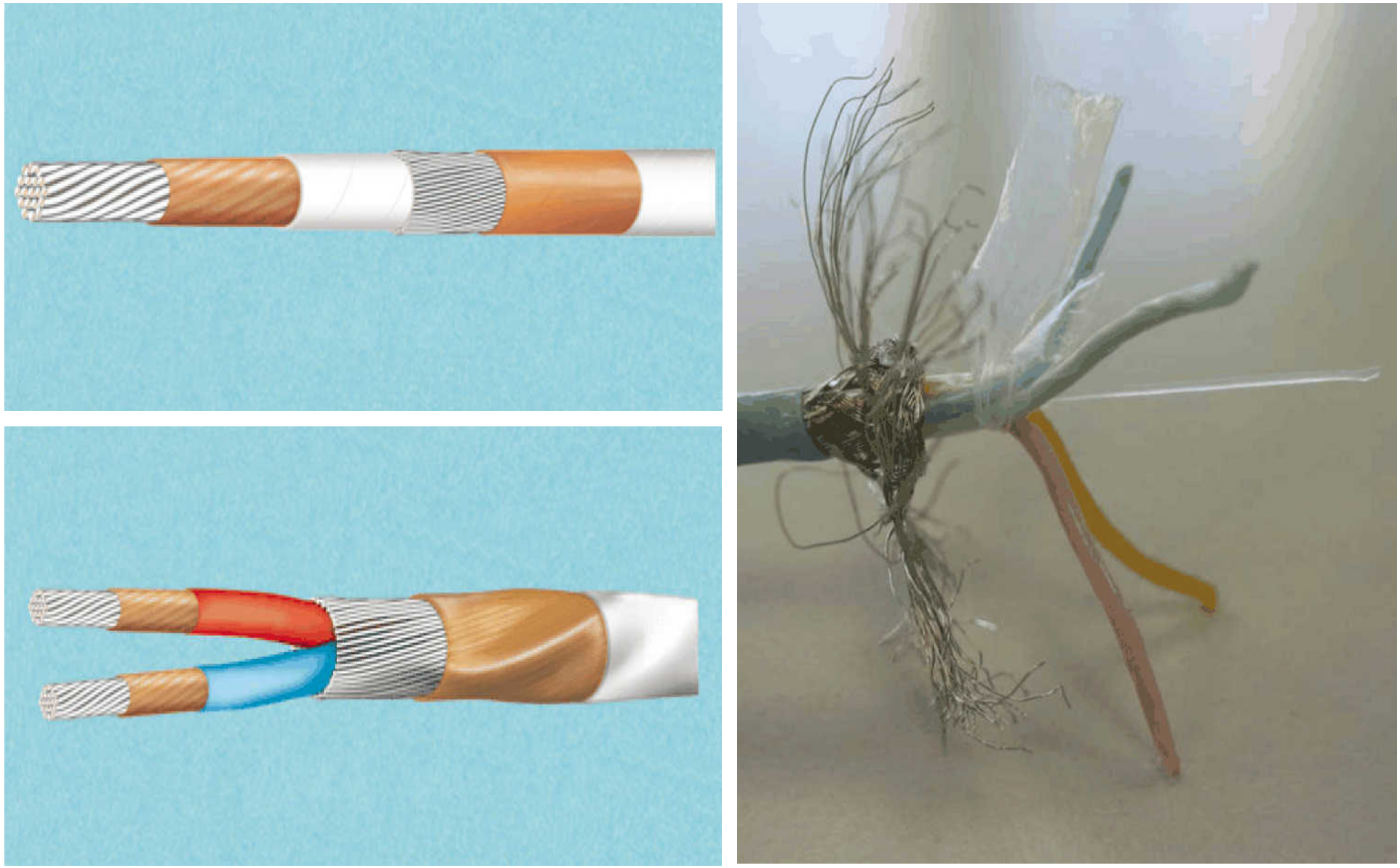

Figure 218 Shielded Wires

FOR TRAINING PURPOSES ONLY!

© Lufthansa Technical Training

HIGH-TENSION AND CO-AXIAL CABLE

Coaxial Cables

Coaxial cables are used for the transmission of high−frequency signals (e.g. wires from a radio device to the transmitting antenna). These cables consist of a center conductor with special insulation, the so−called dielectric, and an outer conductor, which acts like a shield braid around the dielectric.

There's an additional insulation around the outer conductor.

Due to the properties in these cables, the outer conductor has to be connected at both sides of a device because the shield is the return conductor.

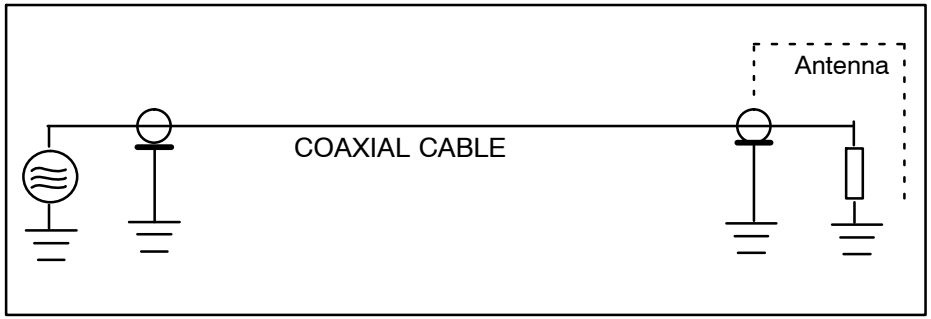

Figure 219 Coax Wire Connection

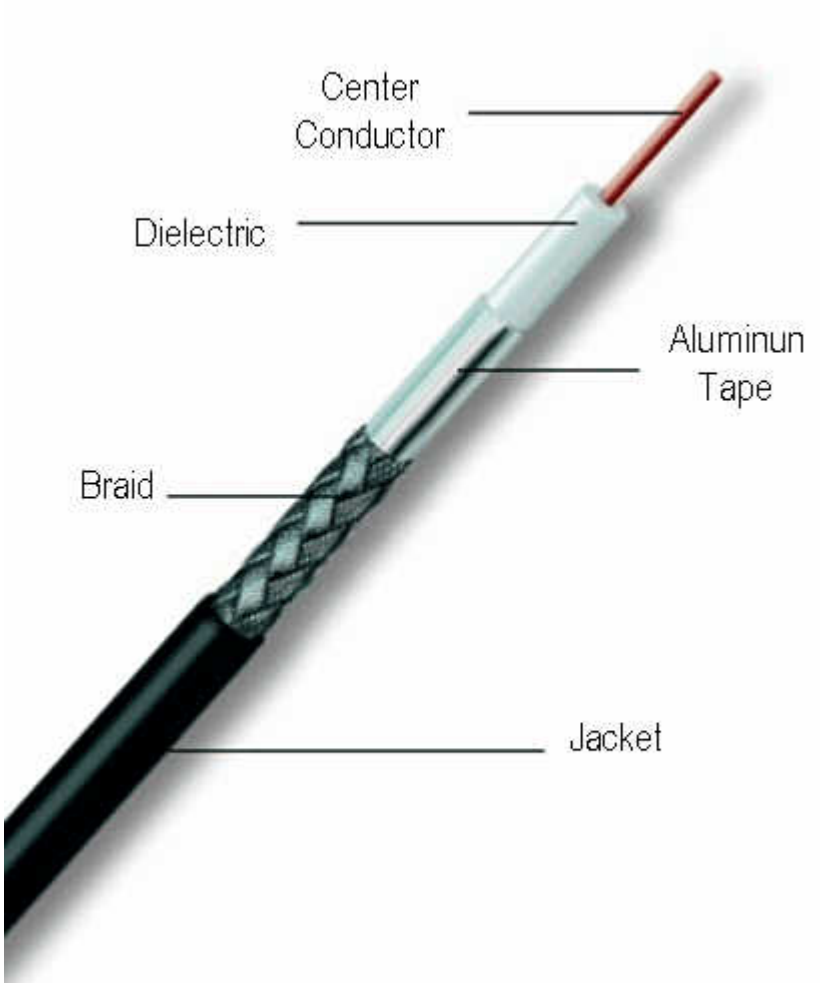

Figure 220 Structure of a Coax Cable

FOR TRAINING PURPOSES ONLY!

© Lufthansa Technical Training

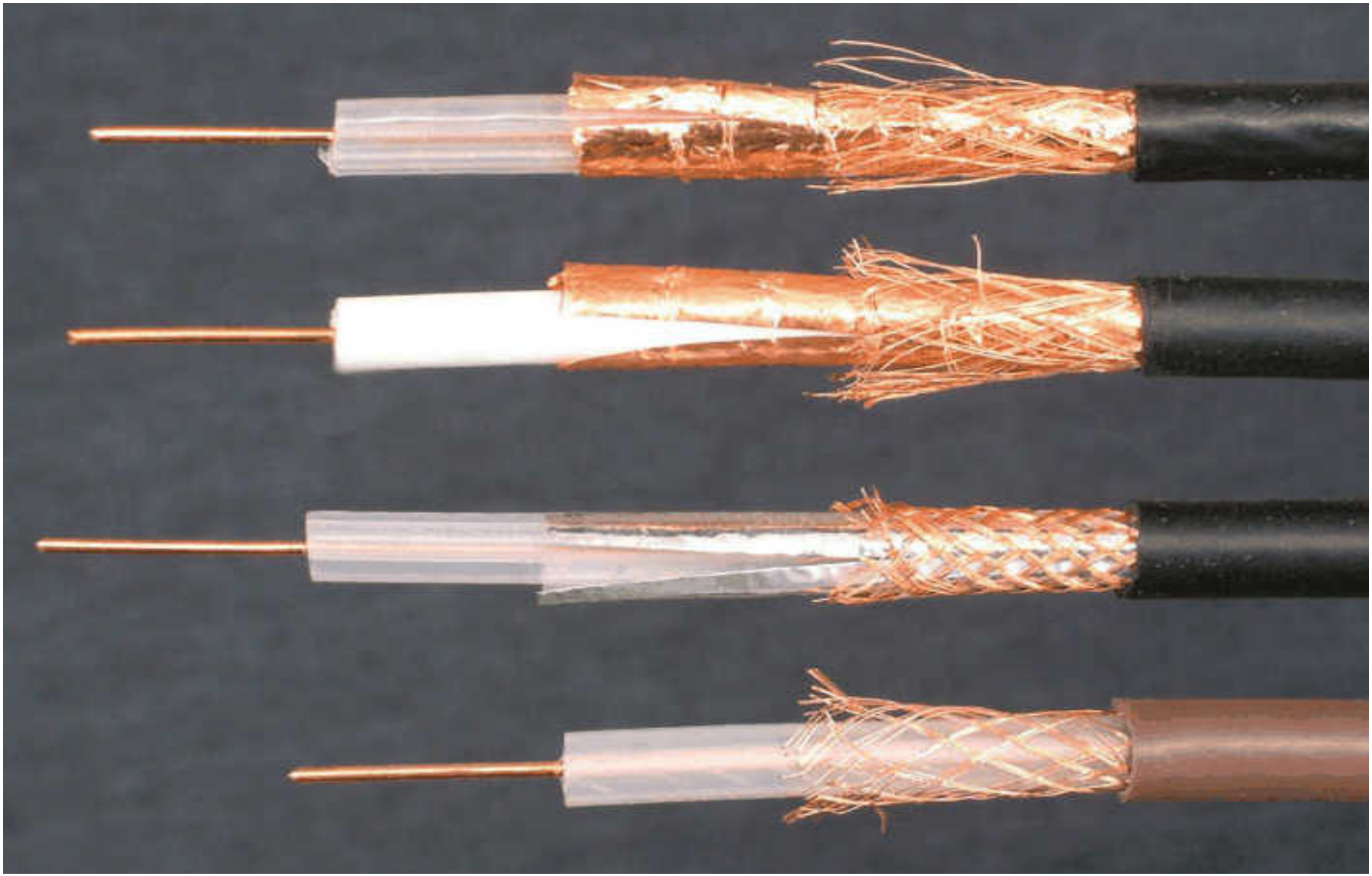

Figure 221 Coax Cables

3|Koax|L1|A/B1/B2

FOR TRAINING PURPOSES ONLY!

© Lufthansa Technical Training

CABLE TYPES, CONSTRUCTION AND CHARAKTERISTICS

Wires in Fire Alarm Systems

Only wires described as ”fire resistant” according to the construction rules of the aviation authorities (e.g. EASA Certification Specification CS25.1203) may be used in fire alarm systems.

According to the CS–definitions, this requirement is met if the wire can withstand 1100° Celsius for a total of five minutes without losing their function.

Furthermore it always comes with a red, white or red–white insulation.

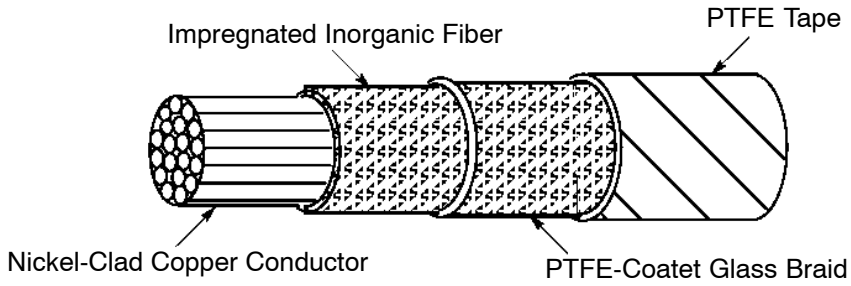

Figure 222 Type 1 Wire

FOR TRAINING PURPOSES ONLY!

© Lufthansa Technical Training

	Specifications			Construction	AWG Size	Rating Temp.
	ECS		EN			
	Ref.	Type	Ref.			
	ASN E0437	DL	2346003	Conductor : 27% Nickel Clad Copper Alloy for AWG 22 27% Nickel Clad Copper for other AWG Insulation : Silica Fiber + Fiberglass Braid + PTFE Tape Application : Fire Resistant Wires	22 to 16	260 C
	ECS 0741	DW	2346005	Conductor : 27% Nickel Clad Copper Alloy for AWG 22 27% Nickel Clad Copper for other AWG Insulation : Fire Resistant Insulation + PTFE tape Suitable for UV Laser Marking Application : Fire Proof Wires	22 to 14	260 C
	ECS 0741	DWB	2346005	2 DWA Basic Cores Twisted Cable Application : Fire Proof Wires	22 to 14	260 C
	ECS 0741	DWC	2346005	3 DWA Basic Cores Twisted Cable Application : Fire Proof Wires	22 to 14	260 C
	ECS 0742	GPA	4608004	1 DWA Basic Core + Shield : Nickel Plated Copper Braid Sheath : PTFE Tapes Suitable for UV Laser Marking Application : Fire Proof Wires	22 to 14	260 C
	ECS 0742	GPB	4608004	2 DWA Basic Core + Shield : Nickel Plated Copper Braid Sheath : PTFE Tapes Suitable for UV Laser Marking Application : Fire Proof Wires	22 to 14	260 C
	ECS 0742	GPC	4608004	3 DWA Basic Core + Shield : Nickel Plated Copper Braid Sheath : PTFE Tapes Suitable for UV Laser Marking Application : Fire Proof Wires	22 to 14	260 C

Figure 223 Fire Resistant Wires

FOR TRAINING PURPOSES ONLY!

© Lufthansa Technical Training

Thermocouple – Wiring

The thermocouple consists of two different metal alloys soldered or welded together in which a minimal electrical potential is created when the wiring contact is heated which is proportional to the temperature.

The alloys ALUMEL and CHROMEL are generally used today. These alloys are also used in the measuring point (formerly the display in the cockpit, today a digital converter in the engine control unit directly on the engine) in order to prevent losses (just a few mV) in the voltage created by the heat.

Thus, the terminal lugs and plug contacts at the joints always must consist of the same alloy as used in the wire. Repair–splices have to be made from the same alloy as well.

Studs in thermocouple devices generally come in different sizes to avoid confusion in stud ledges.

In older aircraft models, the cable installation from the engine bulkhead on was done with COPPER and CONSTANTAN.

This change in material was a method for an improved compensation of the ambient temperatures.

To prevent a mix–up with the various wires, different insulation colors are assigned to all the different alloys.

CHROMEL	CR o. CH	WHITE	stud THIN	89% Ni 10% Cr 1% Fe
ALUMEL	AL	GREEN or RED	stud THICK	94% NI 2% Al 1% Si 2,5% Mn 0,5% Fe
COPPER	CU	RED		100% Cu
CONSTANTAN	CN	YELLOW		55% CU 44% Ni 1% Mn

FOR TRAINING PURPOSES ONLY!

© Lufthansa Technical Training



Figure 224 EGT Connection

FOR TRAINING PURPOSES ONLY!

© Lufthansa Technical Training

Aromatic Polyimide Wiring

The application of aromatic polyimide wires and cables has been common in civil aircraft construction since the 1960s.

The design of this wire consists of the conductor; thus, two layers of AP foil are coiled up in opposite directions. The white varnish on the surface of the wire serves as background for improved legibility of the labeling only.

These wires were popular in aircraft construction because of their low weight (30–35%) and thinner insulation with improved insulation properties.

However, the ”AP” insulation is not completely unproblematic.

As it turned out, short circuits in wire harnesses in combination with fluids can lead to a sudden burn off with this kind of insulation, which can result in a complete failure of the wire harness. This behavior is called CARBON ARC TRACKING or INSULATION FLASHOVER.

This is caused by the high temperature of the short circuit arc which, in combination with water, liberates CO–Gas which in turn burns at a very high temperature.

In order to prevent these problems with ARC– tracking sensitive wires, processing– and installation errors have to be avoided at all costs.

A high level of cautiousness is necessary when marking, stripping or crimping any contacts and when AP–wires are installed: the AP–layer must not be damaged.

The ”piercing” of the wire with test probes is prohibited!

Any damages on the insulation must be repaired immediately.

Further and more specific work instructions must be obtained from the manufacturer’s documentation and the operator–specific documentation (e.g. Lufthansa Technik SPM).

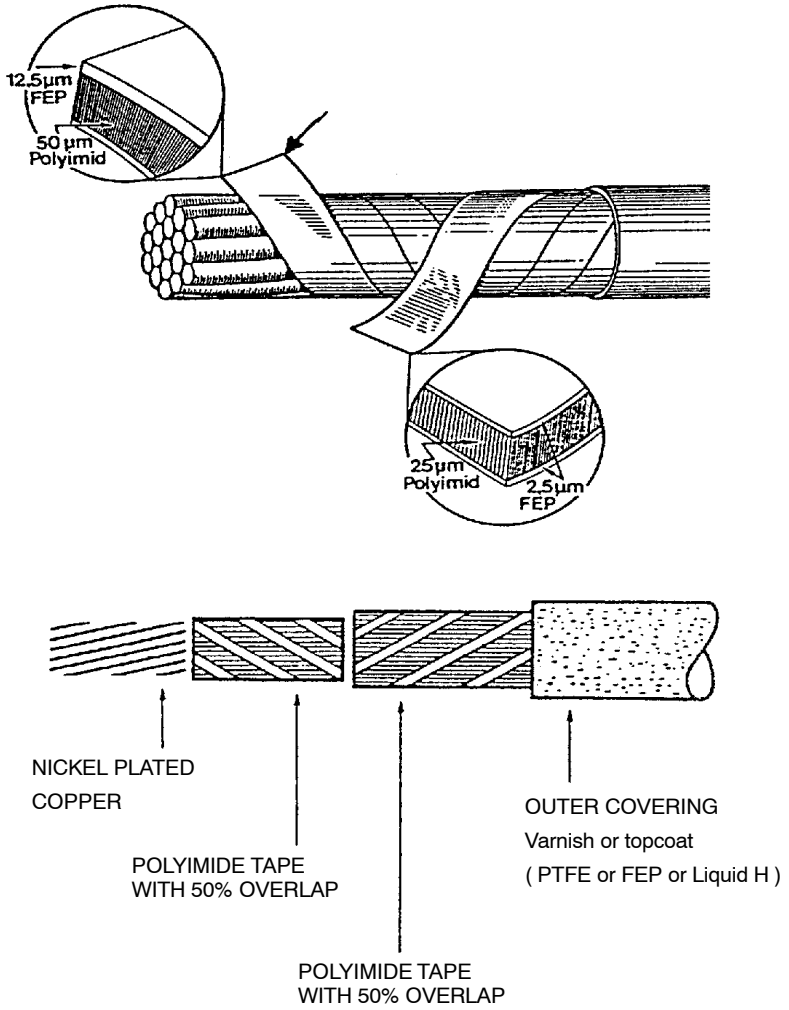

Figure 225 AP Wire Structure

FOR TRAINING PURPOSES ONLY!

© Lufthansa Technical Training

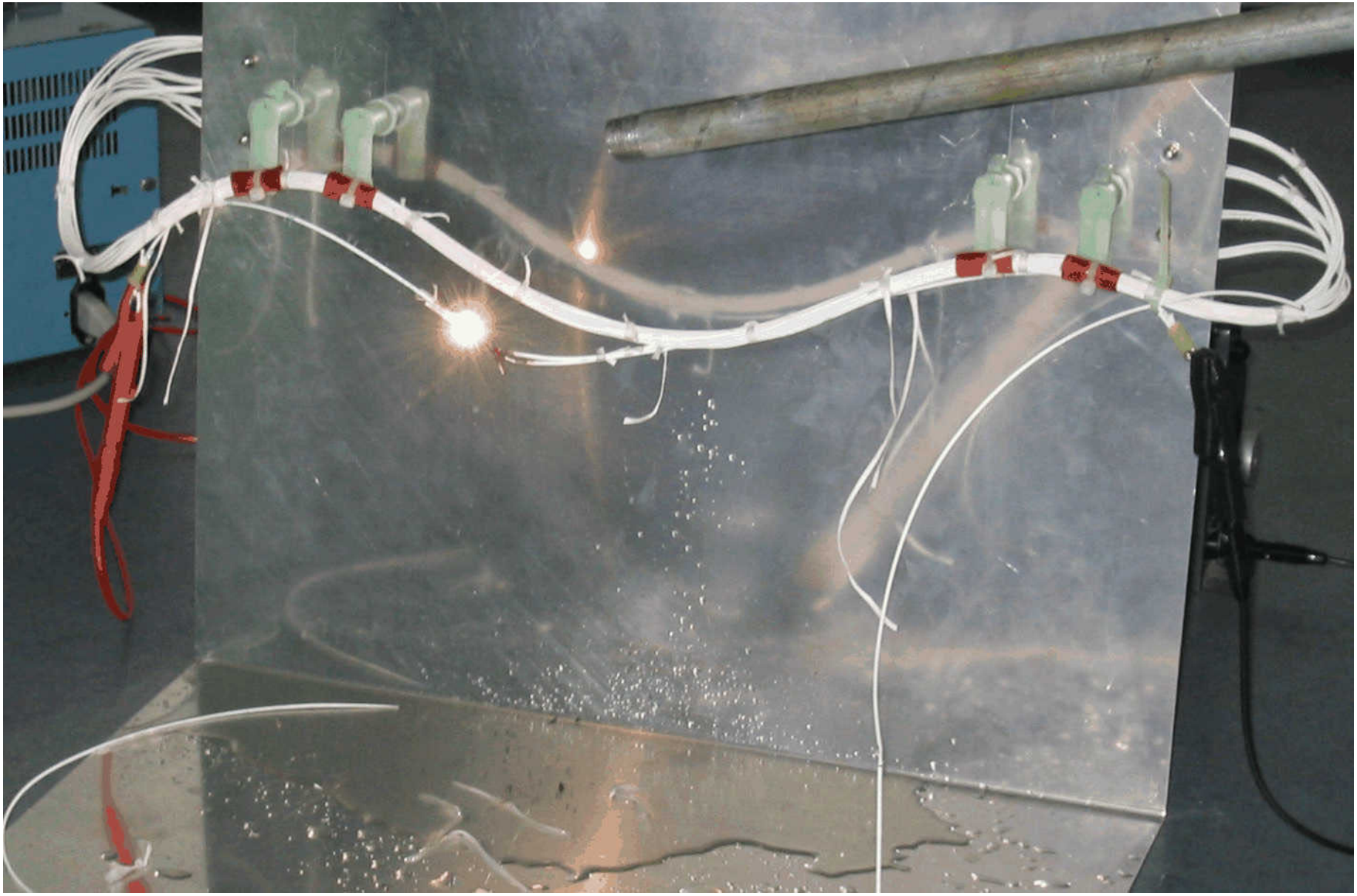

Figure 226 ARC Tracking in Laboratory Experiment

FOR TRAINING PURPOSES ONLY!

© Lufthansa Technical Training

Current Carrying Capacity of Wires

The current capacity of wires is directly dependent on the conductor material, the insulation and the wire size. The way it is installed (in free air or in harnesses) indirectly also affects the maximum current.

When the maximum current flows, the wire is heated. Releasing this heat into the surrounding air is much easier with wires in free air than it is with wires in harnesses.

Conductor Material	Wire Size	Wires in Bundles, Groups or Harnesses (Note 1)			Wire in Free Air & Ambient 70°C (Note 2)		
		Wire Temp Rating			Wire Temp Rating		
		105°C	150°C	200°C	105°C	150°C	200°C
Copper or Copper Alloy	22	3	5	6	9	12.5	16
	20	4	7	9	11	17	21
	18	6	9	12	15	22.5	28
	16	7	11	14	17	26	33
	14	10	14	18	23	35	44
	12	13	19	25	31	47	60
	10	17	26	32	41	62	78
	8	38	57	71	64	90	125
	6	50	76	97	82	125	
	4	68	103	133	110	170	
	2	95	141	179	155		
	1	113	166	210	185		
	1/0	128	192	243	210		
	2/0	147	222	285	240		
	3/0	172	262	335	276		
	4/0	204	310	395	340		
Aluminium	8	30	45				
	6	40	61				
	4	54	82				
	2	76	113				
	1	90	133				
	1/0	102	153				
	2/0	117	178				
	3/0	138	209				
	4/0	163	248				

Notes:

1 Rating for 70°C ambient, 33 or more wires in harness with no more than 20% harness current capacity being used at operating altitude of 60,000 ft.

2 Rating of wires in FREE air at ambient temperature of 70°C.

Figure 227 Capacity in Wire Harnesses

FOR TRAINING PURPOSES ONLY!

© Lufthansa Technical Training

CURRENT CARRYING CAPACITY OF COPPER CONDUCTORS (Measured in Amperes)					
CONDUCTOR SIZE	INSULATION MATERIALS AT GIVEN TEMPERATURES				
	POLYETHYLENE NEOPRENE POLYURETHANE POLYVINYLCHLORIDE (SEMI–RIGID) AT 80 C	POLYPROPYLENE POLYETHYLENE (HIGH DENSITY) AT 90 C	POLYVINYLCHLORIDE PVC (IRRADIATED) NYLON AT 105 C	Kynar POLYETHYLENE (CROSSLINKED) Thermoplastic Elastomer S AT 125 C	KAPTON TEFLON SILICONE AT 200C
30 AWG	2	3	3	3	4
28 AWG	3	4	4	5	6
26 AWG	4	5	5	6	7
24 AWG	6	7	7	8	10
22 AWG	8	9	10	11	13
20 AWG	10	12	13	14	17
18 AWG	15	17	18	20	24
16 AWG	19	22	24	26	32
14 AWG	27	30	33	40	45
12 AWG	36	40	45	50	55
10 AWG	47	55	58	70	75
8 AWG	65	70	75	90	100
6 AWG	95	100	105	125	135
4 AWG	125	135	145	170	180
2 AWG	170	180	200	225	250

Figure 228 Capacity Depending on Type of Insulation

FOR TRAINING PURPOSES ONLY!

© Lufthansa Technical Training

Identification

Only wires complying with the standards of the aeronautical authorities and the aircraft manufacturer may be installed in aircrafts.

To ensure that this demand is met, the manufacturers of the wires label their wires with corresponding part numbers.

These part numbers follow the rules for identification by the standards organisation or the aircraft manufacturer.

The numbers are printed in light or dark green.

Exceptions are red, black or dark green wires: they are labeled with white numbers.

The aircraft manufacturers furthermore label the wires with a number– and/or letter code which describes the function of the wire in the aircraft. This is usually a black imprint.



Figure 229 Printing Colors

FOR TRAINING PURPOSES ONLY!

© Lufthansa Technical Training

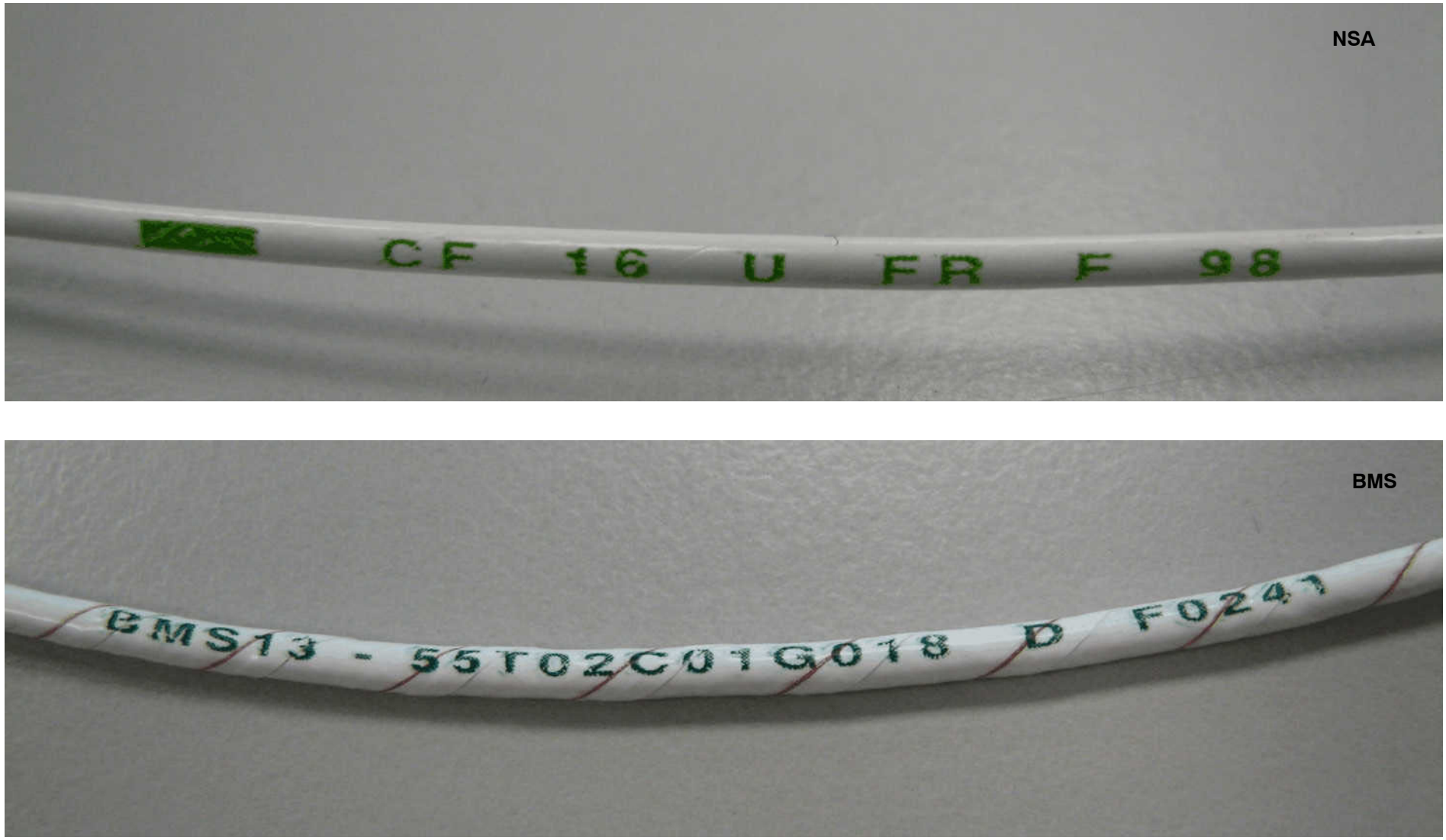

Figure 230 NSA/BMS Standard Identification

FOR TRAINING PURPOSES ONLY!

© Lufthansa Technical Training

Wire Identification – Boeing

In general, all wires used by Boeing are marked with a Boeing Material Specification 13 (BMS13–). This includes

- the standard to which the wire complies,
- the wire design (shielding, wire or cable)
- the number of wires if it is a cable
- as well as the wire size as AWG number

Boeing Wire Labeling

For the identification of wires and cables, Boeing requires:

- the mandatory use of capital letters and Arabic numerals
- markings must be easily legible from a distance of 15 inches under normal lighting conditions
- a minimum contrast of 55 percent between the marking and the wire

Identification for wires with a length of less than 6 inches is not necessary.

Boeing makes a distinction between direct and indirect identification.

Direct identification means that the identification can be printed directly on the insulation of all wires or cables – except for coaxial cables or fiber optic cables BMS 13–71 – these cables could be damaged during the printing process.

Indirect identification with the aid of sleeves is the form of identification for all kinds of wires, cables and wire harnesses.

For indirect identification, the maximum distance between to markings is 72 inches. The maximum distance to the wire end is 4 inches.

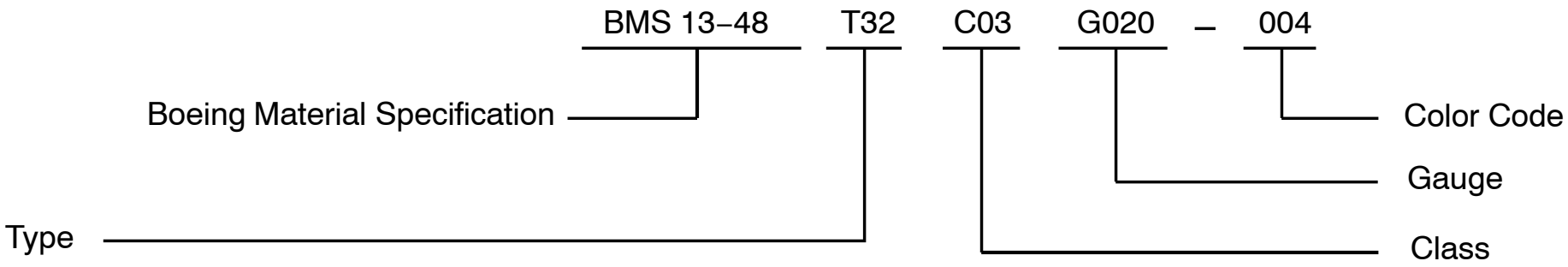

Figure 231 Boeing Standard Wire Part Number Data

FOR TRAINING PURPOSES ONLY!

© Lufthansa Technical Training

Wiring identification – Boeing

Boeing wires additionally are marked with a wire number which includes

- the wire harness, in which the wire is located,
- the wire number,
- the AWG size,
- as well as a color code.

The color code is not a requirement.

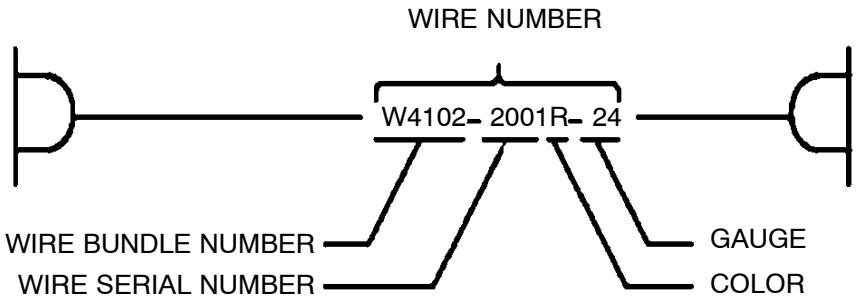

Figure 232 Wire Number 1



Figure 233 Wire Number 2

FOR TRAINING PURPOSES ONLY!

© Lufthansa Technical Training

Manufacturers Imprint – Airbus

Airbus differentiates between two types of wires:

- United States Wire Type (US)
- Metric Wire Type (M)

US Wire Types were built into the A300/A310 series, these wires had a cross section according to the US AWG.

Metric Wire Types were built into the consecutive Airbus–series. They have a smaller cross section but the same capacity and thus contribute to the effort to save weight.

All wire types (US and Metric) comply with defined standards (ABS, ASNE, EN, NSA,..).

The part numbers are always arranged as shown in the following figure, while the first block represents the standard P/N which is not imprinted on the wire; the second block is the wire type code; the third one is the wire gauge.

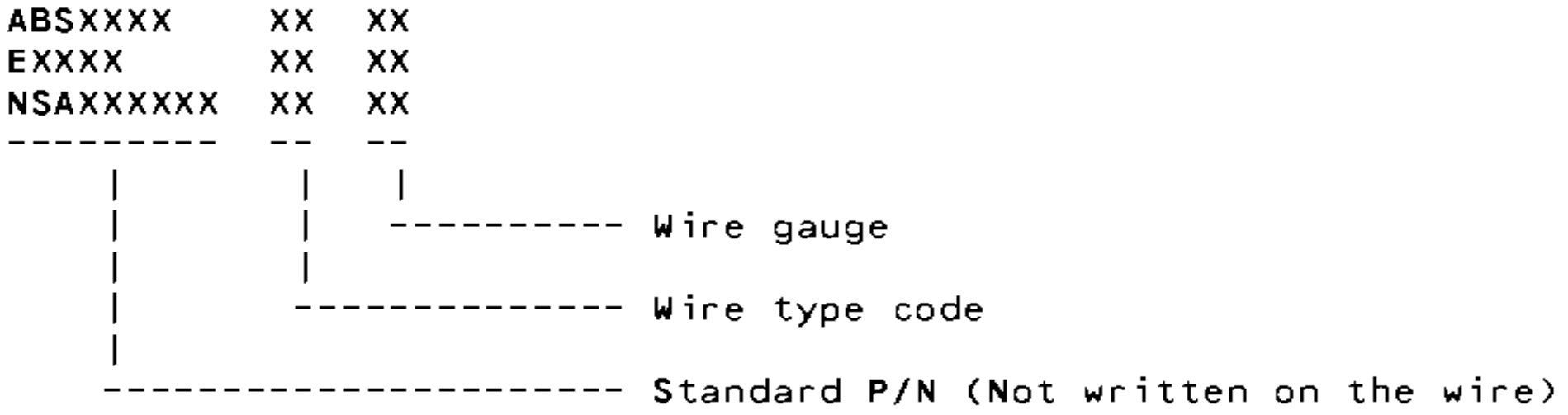

Figure 234 Part Numbers Composition

FOR TRAINING PURPOSES ONLY!

© Lufthansa Technical Training

US Wire Types

In US Wire Types, a code consisting of four blocks in intervals of 300 millimeters is imprinted on the wire.

The first block is the two– or three digit wire type code. The second block contains a two–digit code for the identification of the manufacturer and the country of production. The third block contains the year of manufacture with one or two digits. Block number four is the AWG Size.

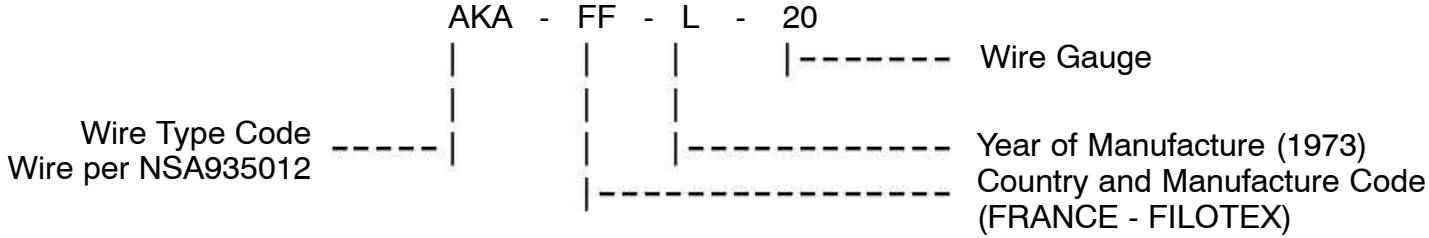

Metric Wire Types

Over the years, different codes have been used for Metric Wire Types; since 1991 a digit code with a total of six blocks is valid:

The first two–digit block is the wire type code, the second one is the AWG size. The third one is a coating code – required for printing on the wire. Block number four represents the country of production, number five the manufacturer. The last one represents the year of manufacture.

The recoding tables corresponding to the individual codes can be found in the ESPM 20–32–21.

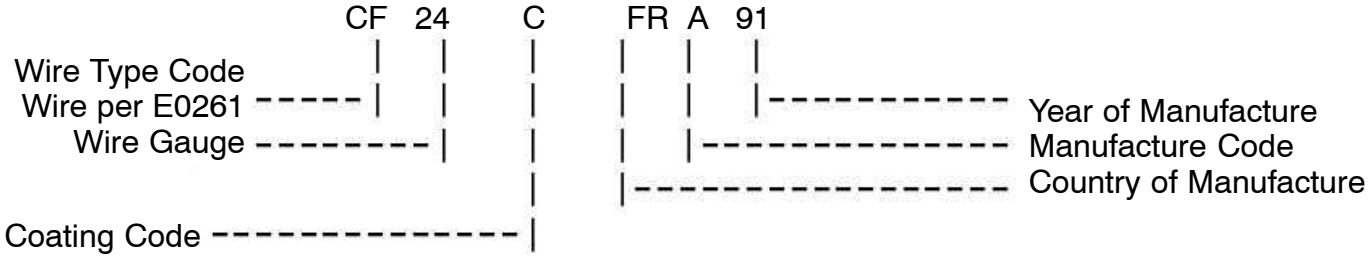

Figure 235 US WireType/Metric Wire Type

FOR TRAINING PURPOSES ONLY!

© Lufthansa Technical Training

Wiring Identification – Airbus

Airbus prints a wire number on the wires, using the ATA–code for classification of aircraft systems.

The first four digit number designates the ATA–chapter and the section from the wiring diagram in which the wire is located.

The second number block is the actual wire number in the aircraft system.

```
2314 - 9904   R
2792 - 0162   B  S
----   ----   -  -
 |      |     |  |
 |      |     |  -----   S = sensitive cable code (if necessary)
 |      |     |
 |      |     --------   Wire color code  (if necessary)
 |      |
 |      --------------   No. of the cable in the circuit
 |
 ----------------------   No. of the circuit defined by ATA Spec 100
```

Wire identification
Wire idenfication is numerical plus a colour identification when used, dependent on its circuit and independent of its location on the aircraft.
Each wire is identified by an 8 digit number composed as follows:
Example: 2322-0121R
- 2322 : Circuit identification prefix corresponding to ATA 100 numbering (chapter, section).
- 0121 : Wire number in circuit (different for each segment)
- R : Color (if used).

Figure 236 Wire Identification



Figure 237 Wire Number Airbus

FOR TRAINING PURPOSES ONLY!

© Lufthansa Technical Training

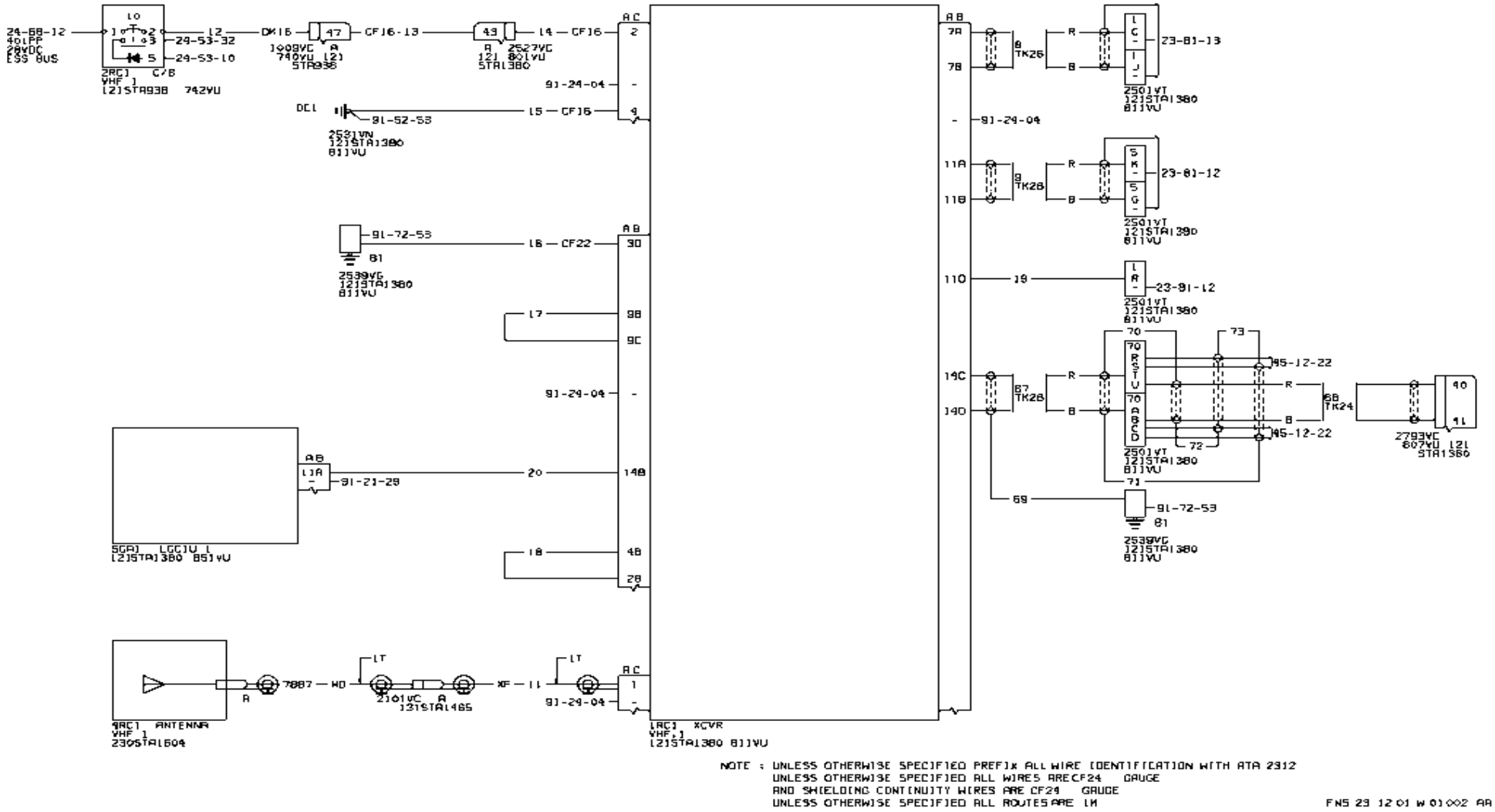

Figure 238 Airbus Wiring

FOR TRAINING PURPOSES ONLY!

© Lufthansa Technical Training

Ground Wire Identification

Due to the wire identification according to corresponding ATA–chapters, problems arise with wires that can not be designated to a specific ATA–chapter, e.g. common ground wires.

These wires are ground connection wires for systems from diverse ATA–chapters. For this reason, Airbus created a new subchapter for these wires.

Common ground wires are listed under 24–91.

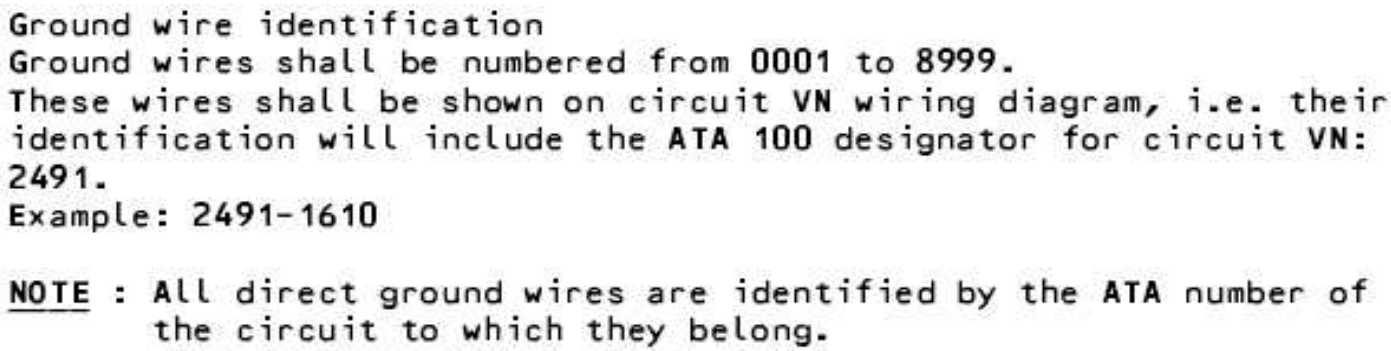

Spare Wire Identification

The same problem occurs with the spare wires; these wires are additionally connected to wire harnesses in order to be able to replace individual wires in the event of an error.

Spare Wires are listed under ATA–chapters 24–99.

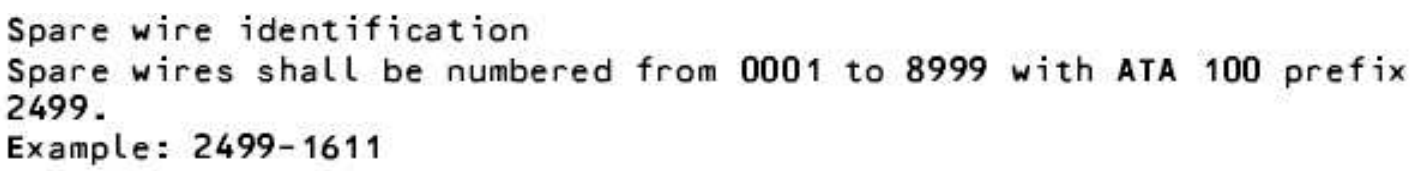

Figure 239 Ground Wire Identification/Spare Wire Identification

FOR TRAINING PURPOSES ONLY!

© Lufthansa Technical Training

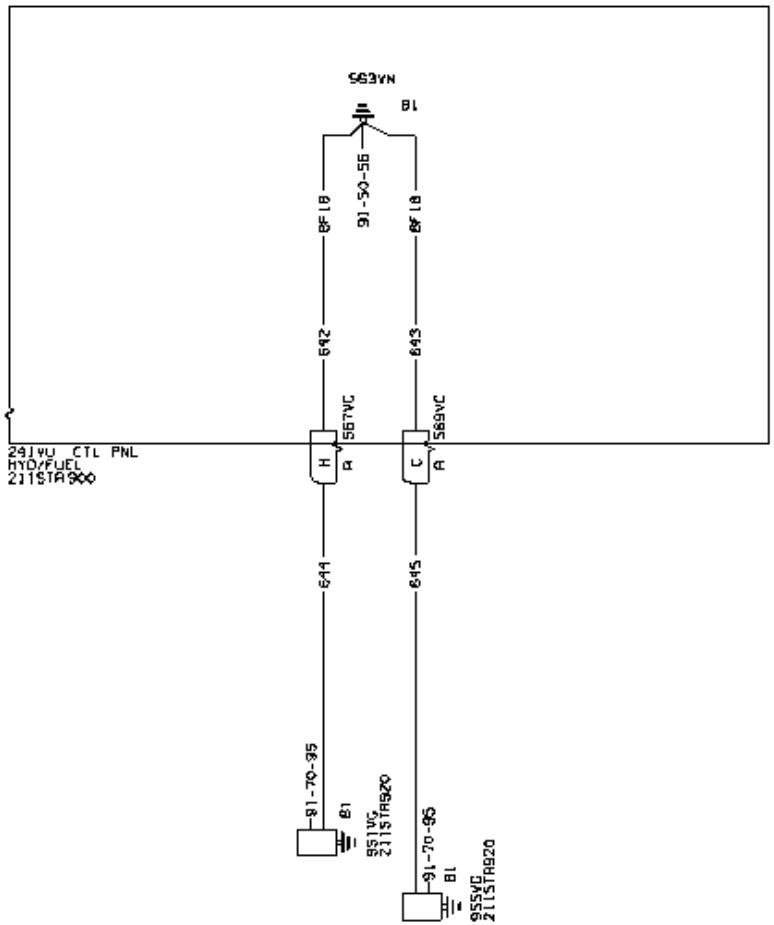

NOTE : UNLESS OTHERWISE SPECIFIED PREFIX ALL WIRE IDENTIFICATION WITH ATA 2491
UNLESS OTHERWISE SPECIFIED ALL WIRES ARE CF18 GAUGE
UNLESS OTHERWISE SPECIFIED ALL ROUTES ARE 1MF

Figure 240 Ground Wires

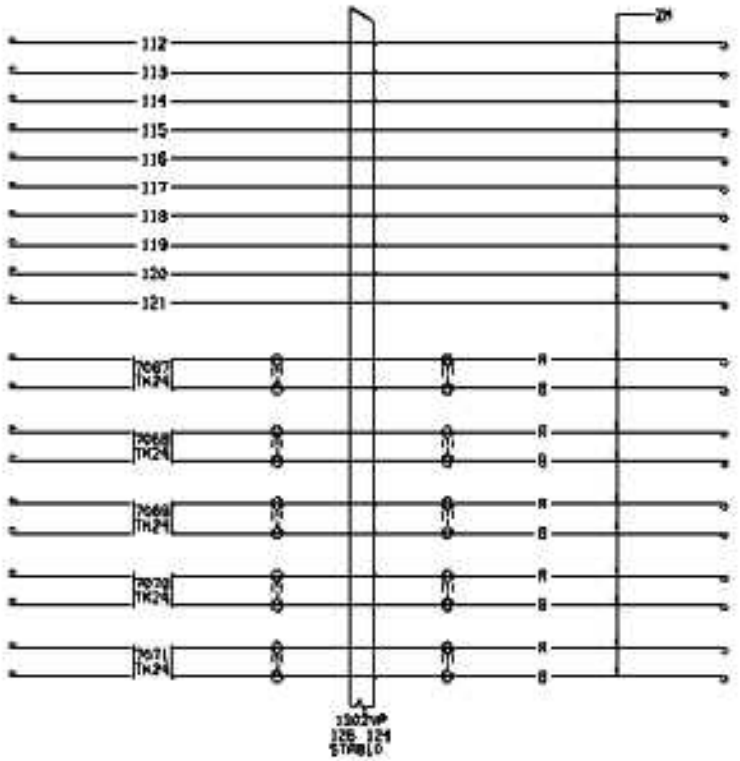

NOTE : UNLESS OTHERWISE SPECIFIED PREFIX ALL WIRE IDENTIFICATION WITH ATA 2499
UNLESS OTHERWISE SPECIFIED ALL WIRES ARE CF20 GAUGE
UNLESS OTHERWISE SPECIFIED ALL ROUTES ARE 1M

Figure 241 Spare Wires

FOR TRAINING PURPOSES ONLY!

© Lufthansa Technical Training

Special Wiring Identification

Additionally, a distinction is made by Airbus depending on who added or modified the wires.

Wires that have been added or modified on the aircraft by the customer, shall be numbered from 9000 to 9999 in accordance to COC's (customer orientated changes).

Customer Wire Numbers

Wires added or modified in the aircraft by the customer
The wires added or modified in the aircraft by the customer shall be numbered from **9000** to **9999** with the **ATA 100** prefix of the corresponding system.
Example: 2411-9010

Wires added or modified in the aircraft by product support, shall be numbered from 8000–8999.

Service Bulletin Wire Numbers

Wires added or modified in the aircraft by product support
The wires added or modified in the aircraft by product support shall be numbered from **8000** to **8999** with the **ATA 100** prefix of the corresponding system.
Example: 2212-8021

Shielded wires/cables shall be numbered from 7000 to 7999.

Shielded Wire Numbers

Shielding or shielded wires/cables shall be numbered from **7000** to **7999** with **ATA 100** prefix of the corresponding systems.
Examples: 3411-7500; 7832-7800

Figure 242 Customer/Service Bulletin/Shielded Wire Numbers

FOR TRAINING PURPOSES ONLY!

© Lufthansa Technical Training

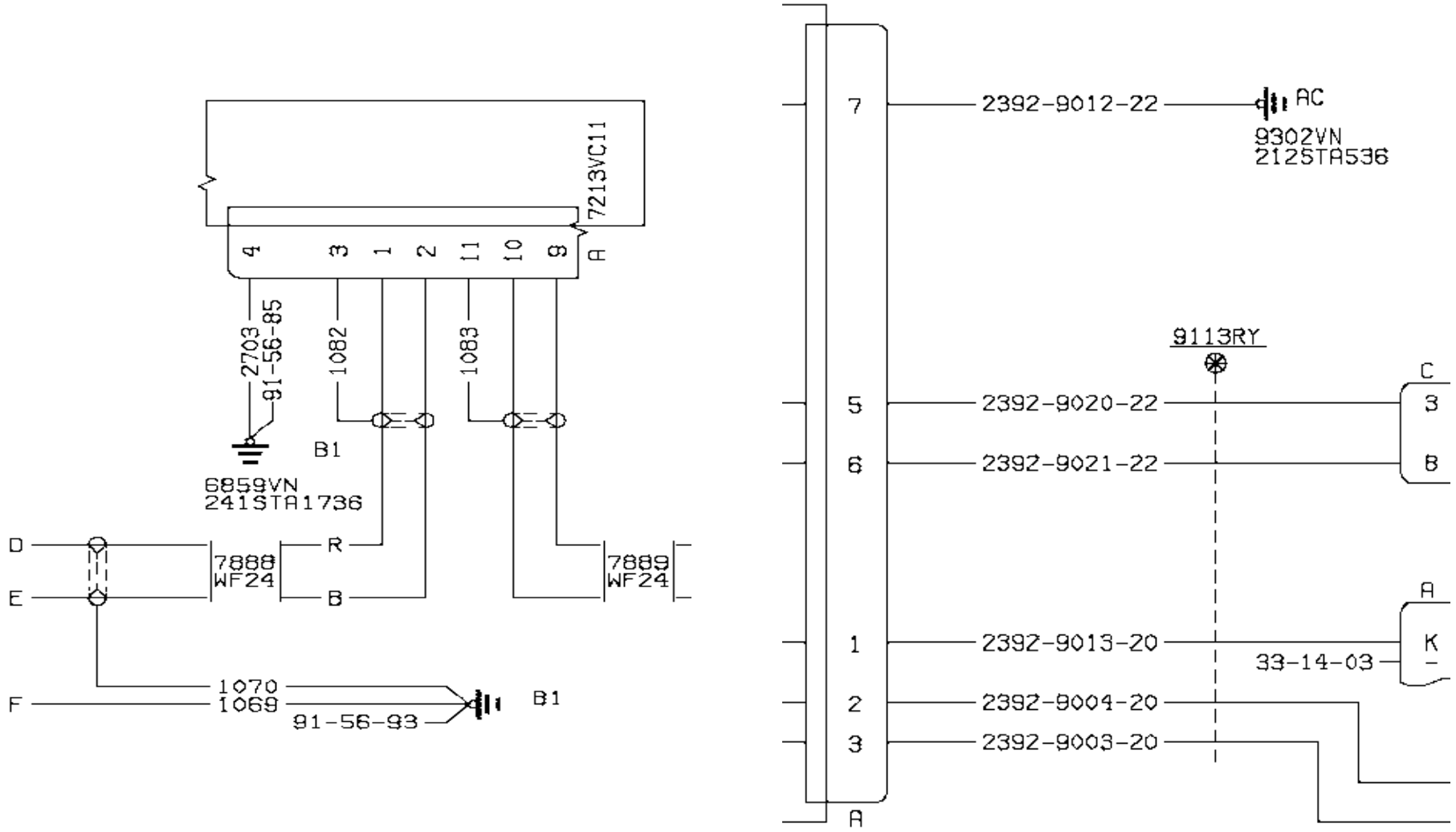

Figure 243 7000 and 9000 Wiring Number

FOR TRAINING PURPOSES ONLY!

© Lufthansa Technical Training

Sensitive Wires

The sensitive wires are also specifically identified in Airbus aircraft.

These wires have pink sleeves with black printing at their ends.

In the Aircraft Wiring Manual, these wires are identified by the letter ”S”.

These wires must not be modified.

If repair work needs to be done, a test of the concerned system is required.

Sensitive Wires
The sensitive wires are identified either by pink sleeves with black printing at their ends or directly on the wire with the S letterindicated after each wire identification (e.g.:2231 0015S) on all wire length.
In the **WDM**, these wires are identified by letter S.

NOTE : The presence of this marking indicates to the maintenance personnel that these wires must not be modified . In the event of an action on these wires, a test of the concerned system is required.

Figure 244 Sensitive Wires

FOR TRAINING PURPOSES ONLY!

© Lufthansa Technical Training

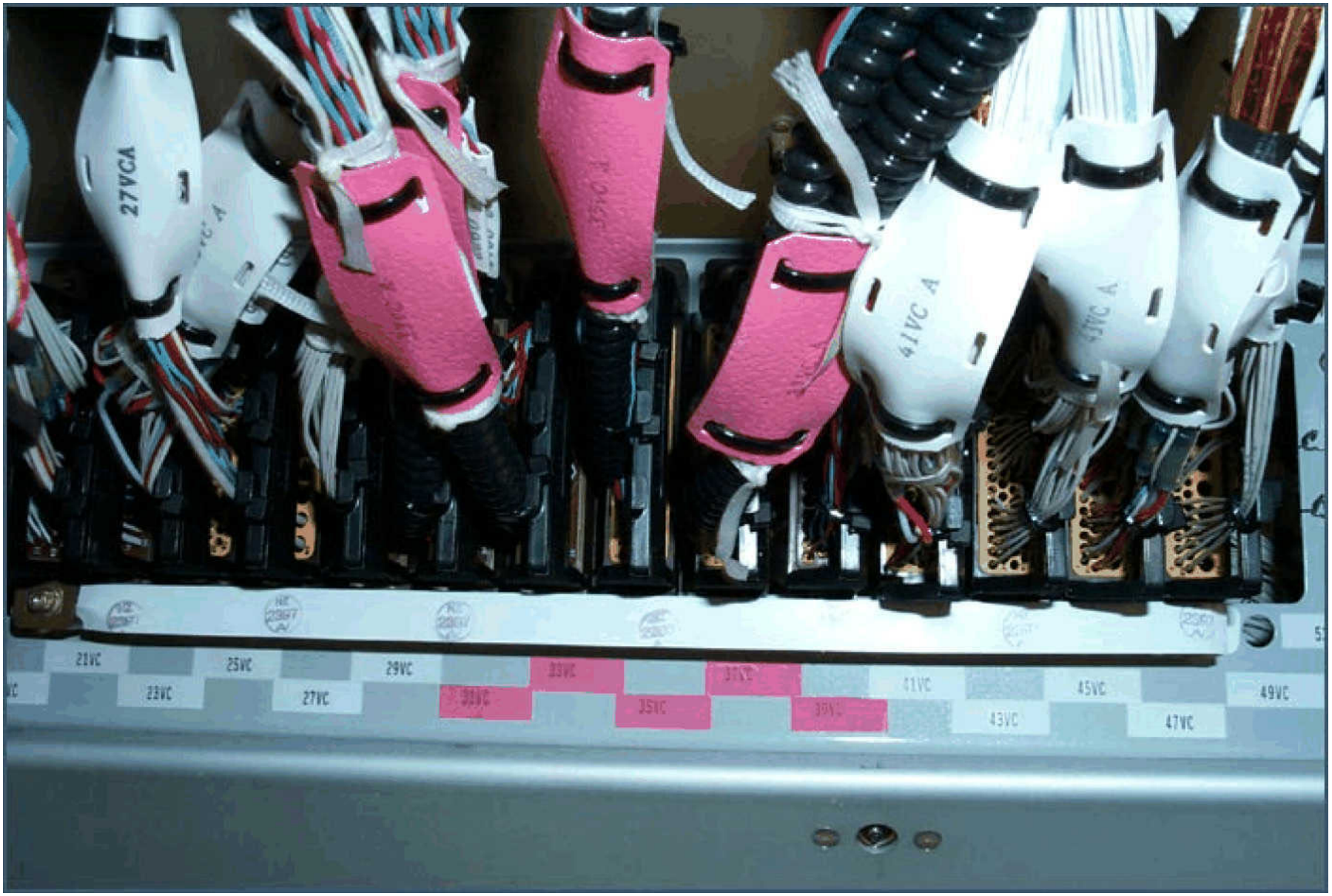

Figure 245 Sensitive Wire Identification

FOR TRAINING PURPOSES ONLY!

© Lufthansa Technical Training

Crimped Connections

General

To connect a wire to a connecting element, one of the most common methods today is to crimp these elements onto a wire by means of a special crimping tool. This procedure is also called 'cold welding'; the connecting element is non−detachably connected to the wire. Design and requirements have been defined in order to ensure a proper connection.

- The wire strands must be pressed together without it leading to breakage or separation
- The connection may not reduce the electrical attributes of the wire
- The junction from the connecting element to a component must be equivalent to a direct connection to a corresponding copper wire
- There also are guidelines regarding tensile strength of crimped connections

To meet these guidelines, specially designed, tested and properly adjusted crimping tools have to be used for all crimped connections!

Before using a crimping tool, always check:

- did you choose the appropriate tool for the terminal?
- for cleanliness
- for damages
- for corrosion
- for abrasion

FOR TRAINING PURPOSES ONLY!

© Lufthansa Technical Training



Figure 246 Crimping Tool for PIDG

FOR TRAINING PURPOSES ONLY!

© Lufthansa Technical Training

Connecting Aluminum and Copper Wires

Particular attention is required whenever aluminum and copper wiring shall be clamped together on a terminal block. The different wires must not come into direct contact. In combination with the atmospheric humidity, an electrochemical element would form, which would lead to dissolution of the base metal and thus contact resistance due to corrosion.

Therefore, non−magnetic washers placed between the different terminals must always be used in order to prevent this.

FOR TRAINING PURPOSES ONLY!

© Lufthansa Technical Training

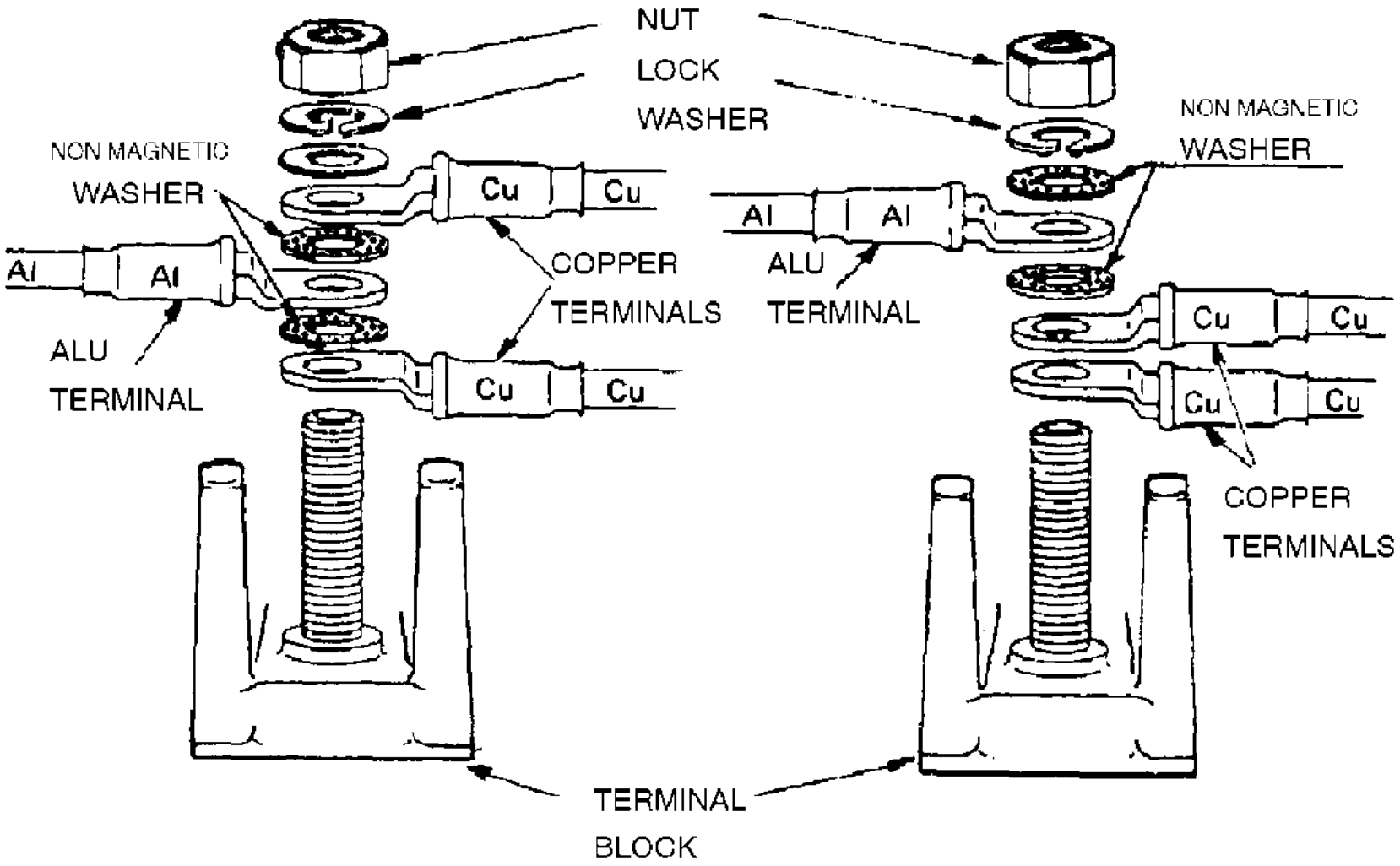

Figure 247 AL/CU Connections

FOR TRAINING PURPOSES ONLY!

© Lufthansa Technical Training

Copalum Splices and Terminals

Due to this issue, COPALUM terminals and splices were developed.

Any kind of connection between different aluminum wires or between aluminum and copper wires is possible. They consist of tin−plated electrolytic copper with a perforated insert made of tin−plated brass.

During the crimping procedure, the soft aluminum is pressed into the holes of the brass insert. The oxide layer then cracks on the aluminum creating a homogenous contact between the two metals. This connection is gas− and moisture proof and thus corrosion−resistant.

FOR TRAINING PURPOSES ONLY!

© Lufthansa Technical Training

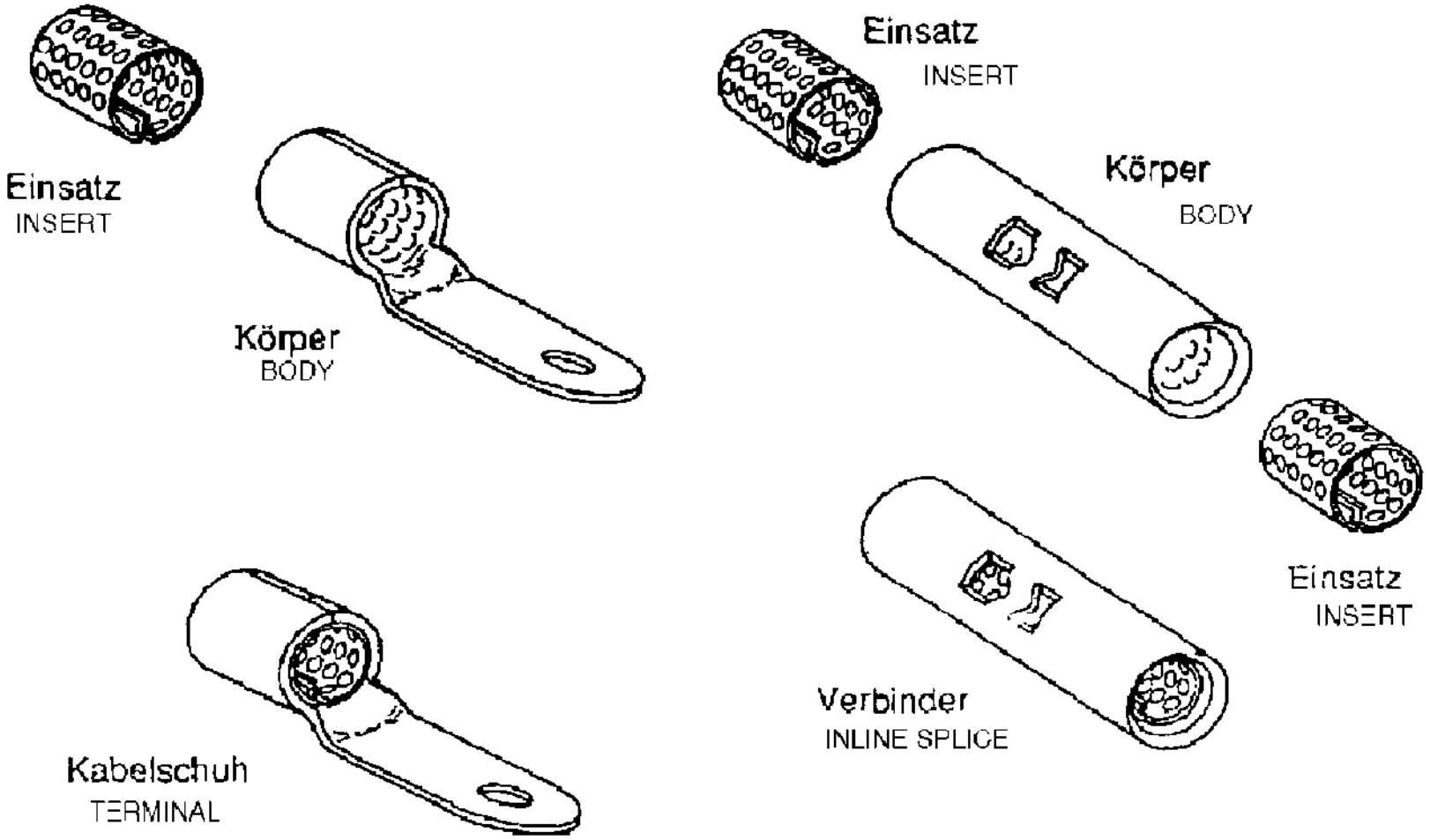

Figure 248 COPALUM Connections

FOR TRAINING PURPOSES ONLY!

© Lufthansa Technical Training

CONNECTIONS

CONNECTORS

General

Connectors consist of receptacle and plug. They are required for a simple and safe disconnect of electrical connections during maintenance.

Connectors have pins and sockets which can both (depending on the type of plug) be housed either in the socket or in the plug.

There is a general rule for determining the socket side: sockets shall always be installed on the live part of the connector, because the sockets are scoop−proof and so unwanted short circuits can be prevented.

A distinction is made between circular and rectangular connectors. Rectangular connectors are preferably used in equipment racks and panels; circular plug connections can be used in areas with increased environmental influences.

FOR TRAINING PURPOSES ONLY!

© Lufthansa Technical Training

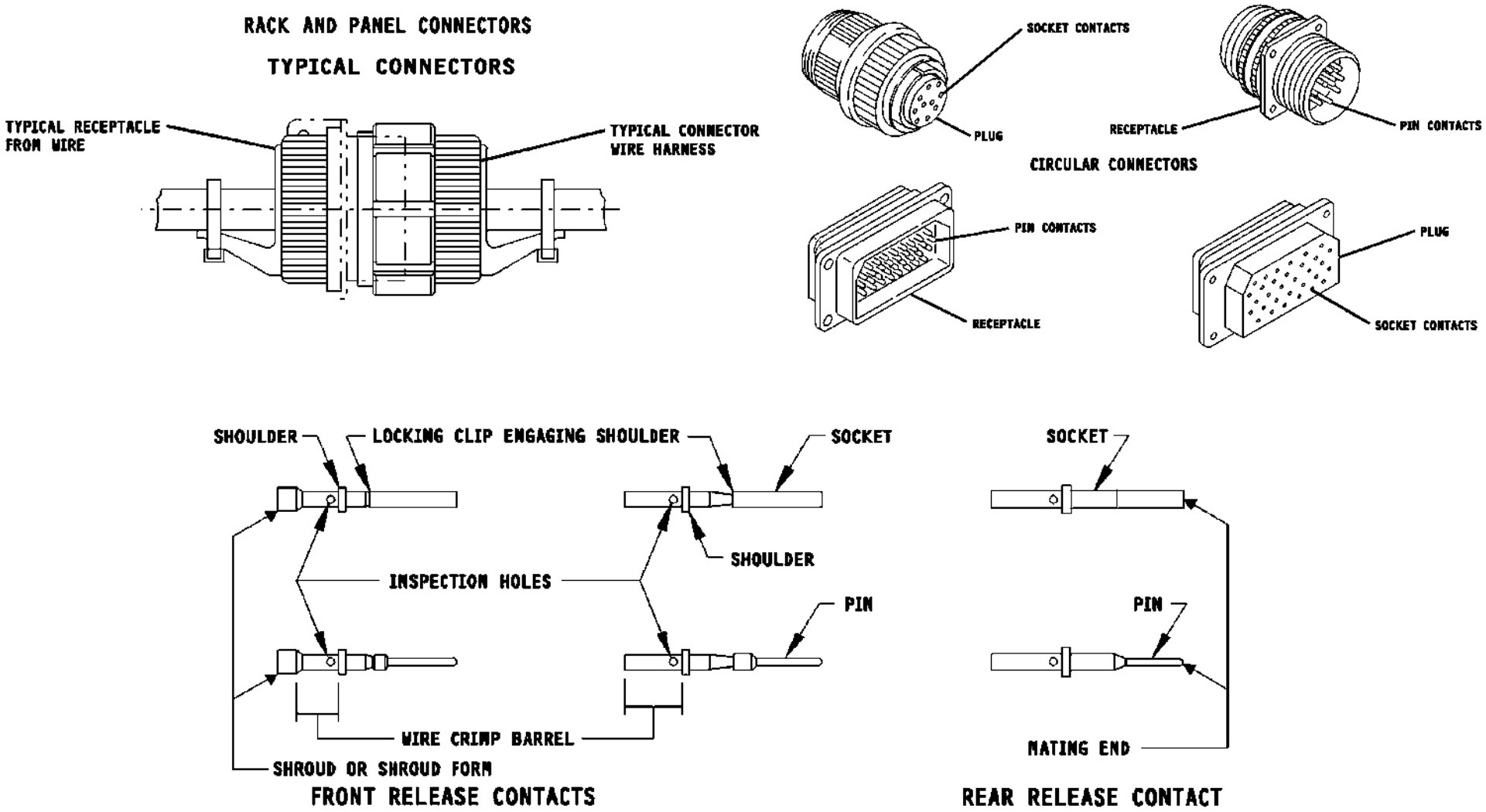

Figure 249 Plugs and Receptacles

FOR TRAINING PURPOSES ONLY!

© Lufthansa Technical Training

Plug connectors come either with Bayonet– Threaded– or Breech–Coupling.

Bayonet Coupling

By plugging together and a 1/4 turn of the cap nut, the connection is securely locked; automatic opening is prevented.

Inserting the plug the wrong way is prevented by means of several guide slots and lugs. They also prevent any confusion when connecting a plug to a receptacle which is otherwise identical in construction.

Breech Coupling

After positioning, the cap nut is locked with a coaxial movement.

To unlock, the cap nut has to be pulled (Similar to hydraulic or compressed air connections).

Threaded Coupling

The cap nut is connected to the receptacle by means of a fine thread; this kind of connector then has to be secured with a lockwire. Exception: plug with self–locking ”coupling”.

See the following table to determine whether the connection has been done properly.

FOR TRAINING PURPOSES ONLY!

© Lufthansa Technical Training

Coupling Mechanism	Full Connection	
	Reference	Condition
Bayonet Coupling	Three axial stripes on the coupling ring of the plug and receptacle shell; three holes around coupling ring	Stripes on the plug and receptacle are aligned
		Bayonet pins can be seen in the holes of the coupling ring
		A click can be heard or felt
	Three holes around the plug coupling ring	Bayonet pins can be seen in the holes of the coupling ring
		A click can be heard or felt
	Holes in the plug coupling ring and a stripe around the circumference of the receptacle	Plug coupling ring over the color stripe on receptacle so that the stripe cannot be seen
		Bayonet pins can be seen in the holes of the coupling ring
		A click can be heard or felt
Breech Coupling	Axial stripe on the receptacle key and the coupling ring of the plug; color stripe around the rear shell of the plug	Color stripe on the rear shell of the plug cannot be seen
		Stripes on the receptacle key and coupling ring are aligned
Threaded Coupling	None	Tightened by hand plus a maximum 1/8 turn more
		Lockwire installed if specified
	Color stripe around the circumference of the threaded end of the receptacle	Tightened by hand plus a maximum 1/8 turn more
		Engaging end of the coupling ring of the plug over the color stripe so that the stripe cannot be seen
Threaded, Self-Locking Coupling	Indicator windows with color stripe on the coupling ring of the plug	Tightened by hand plus a maximum 1/8 turn more
		Flag in the windows of the indicator is aligned with the color stripes
		Clicks that are heard and felt can be ignored
	Indicator slots in the coupling ring of the plug	Tightened by hand plus a maximum 1/8 turn more
		Indicator slots are filled with colored indicators
	Color indicator band on the receptacle shell	The coupling ring is fully tightened
		Approximately three to five more clicks after the color indicator band cannot be seen

Figure 250 Various Connectors

FOR TRAINING PURPOSES ONLY!

© Lufthansa Technical Training

Connectors are classified according to their resistance against environmental influences, designated by letters, e.g.:

A = simple connector

D = increased temperature resistance etc.

Older connector versions sometimes consisted of several parts which had to be carefully assembled. In more recent versions, connectors with fixed silicone rubber insulation inserts are more and more common. They only consist of connector housing with the corresponding pins and sockets. The type of strain relief varies depending on the on−site conditions.

FOR TRAINING PURPOSES ONLY!

© Lufthansa Technical Training

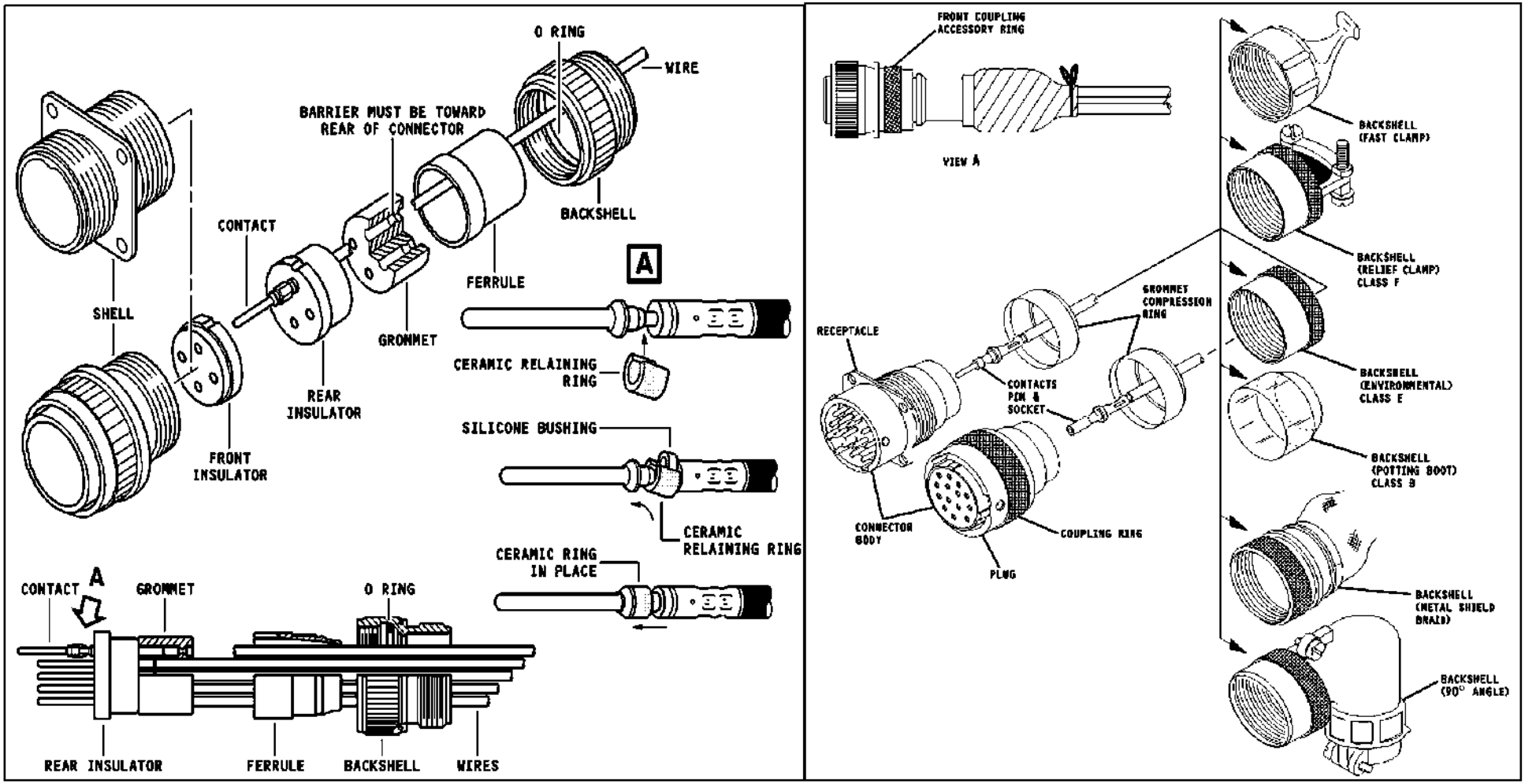

Figure 251 Plug and Clamshell Construction

FOR TRAINING PURPOSES ONLY!

© Lufthansa Technical Training

Because of the various applications for connectors, there are different shell–sizes and contact arrangements within each individual series of connectors. The identification for plugs and receptacles varies significantly. There are versions with

- numbers
- capital letters
- lower case letters

Lower case letters are used if the capital letters are not sufficient due to the number of contacts; if this still isn't sufficient, it starts over with double capital letters.

It is important to remember, that there are no lower case letters for contact identification in the circuit diagrams for connectors. Therefore lower case letters are identified with additional characterization as shown below:

- ***P**
- **–P**
- **<F**
- **A**

FOR TRAINING PURPOSES ONLY!

© Lufthansa Technical Training

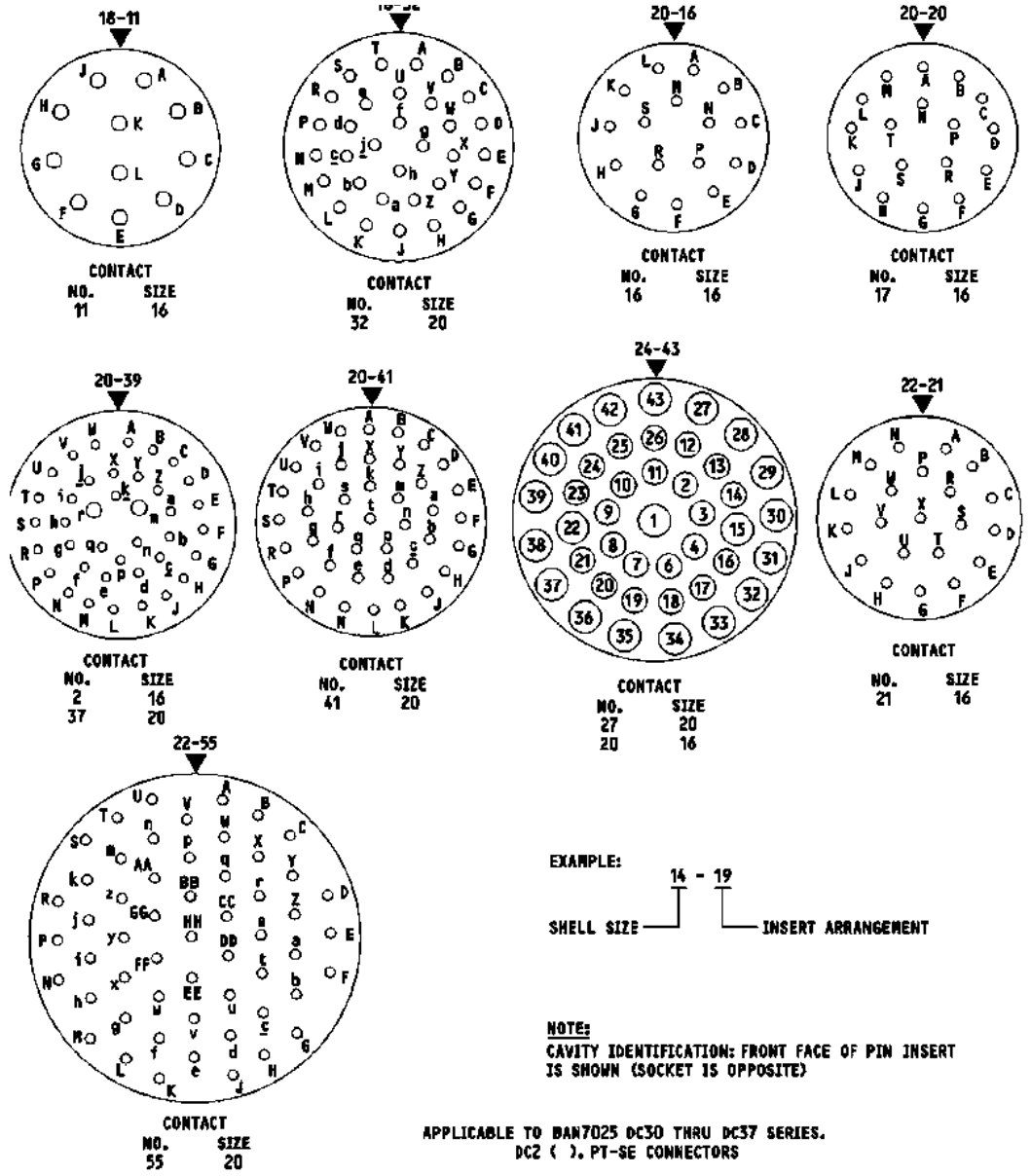

Figure 252 Examples of diff. Shell Sizes and Contact Arrangements

FOR TRAINING PURPOSES ONLY!

© Lufthansa Technical Training

Connectors have to be environmentally sealed in accordance with precise regulations. In most cases, not all contacts of a connector are used; thus the empty contact cavities require a seal plug or a seal rod. Therefore there are corresponding rules for sealing, depending on the grade of environmental influences for a specific location:

TYPES OF SEALS FOR AN EMPTY CONTACT CAVITY

Location of Installation	Connector Type	Type of Seal	Procedure
Firewall	Environmentally Sealed	A stub wire assembly in each empty contact cavity	Paragraph 3.F.
	Unsealed	None; unsealed connectors are not installed	-
Pressurized Area	Environmentally Sealed	A seal plug in each empty contact cavity	Paragraph 3.A.
		A seal rod in each empty contact cavity	Paragraph 3.C.
		An unwired contact and a seal plug in each empty contact cavity when it is specified in the connector assembly procedure	Paragraph 3.D.
		An unwired contact and a seal rod in each empty contact cavity when it is specified in the connector assembly procedure	Paragraph 3.E.
	Unsealed	None; an empty contact cavity can stay empty	-
Unpressurized Area	Environmentally Sealed	A seal plug in each empty contact cavity	Paragraph 3.B.
	Unsealed	None; unsealed connectors are not installed	-

Figure 253 Selecting the Procedure



Figure 254 Plug Seals

FOR TRAINING PURPOSES ONLY!

© Lufthansa Technical Training

3.A.

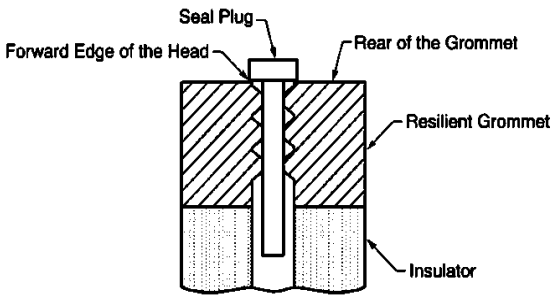

POSITION OF THE SEAL PLUG IN THE CONTACT CAVITY - HEAD OUT

3.B.

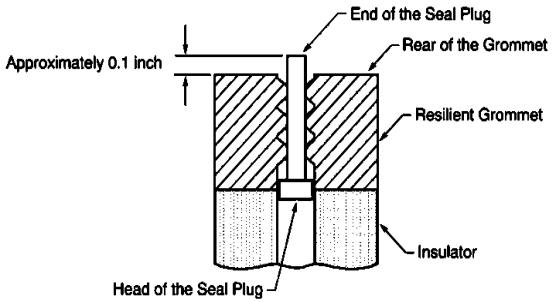

POSITION OF THE SEAL PLUG IN THE CONTACT CAVITY - HEAD IN

3.C.

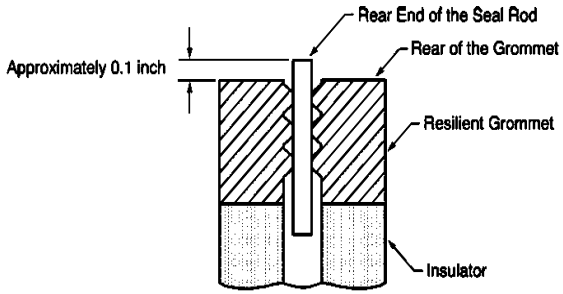

POSITION OF THE SEAL ROD IN THE CONTACT CAVITY

3.D.

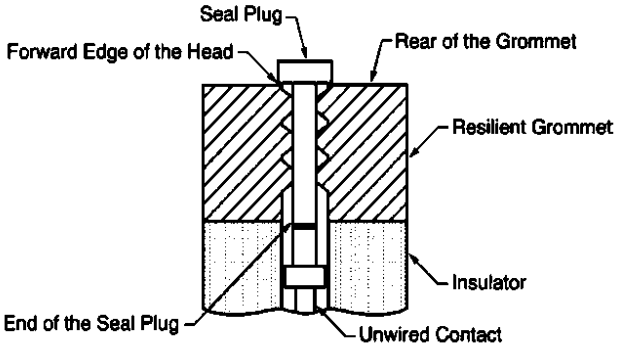

POSITION OF THE SEAL PLUG IN A CONTACT CAVITY WITH AN UNWIRED CONTACT

3.E.

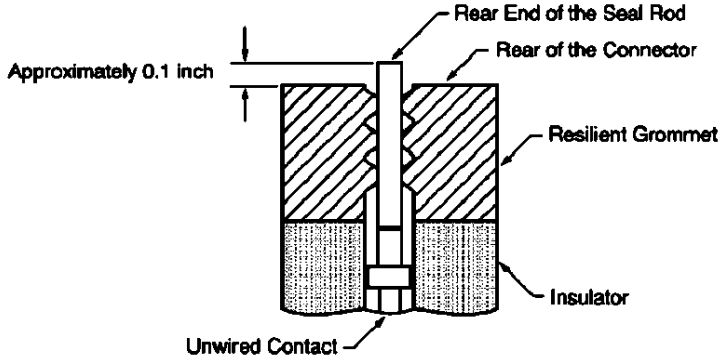

POSITION OF THE SEAL ROD IN A CONTACT CAVITY WITH AN UNWIRED CONTACT

Figure 255 Sealing of Contact Cavities

FOR TRAINING PURPOSES ONLY!

TABLE OF CONTENTS

M6 MATERIALS AND HARDWARE 1

AIRCRAFT MATERIALS - GENERAL 2
MATERIALS OVERVIEW 2
GENERAL 4
DEFINITIONS 6
PROPERTIES OF MATERIAL 9
METAL GENERAL 10
METALS OF AIRCRAFT STRUCTURE 11
CRYSTAL AND CELLS 12
MATERIAL DEVELOPMENT 14

M6.1 AIRCRAFT MATERIALS - FERROUS 16

CHARACTERISTICS, PROPERTIES & IDENTIFICATION OF COMMON ALLOY STEELS 16
GENERAL 16
STEEL GRADES 18
STRENGTH OF NON ALLOYED STEELS 19
ALLOY STEEL ON AIRCRAFT STRUCTURES 20
HIGH STRENGTH HEAT TREATED STEELS 22
MATERIAL DESIGNATIONS OF HHT-STEELS 24
EXAMPLES OF HHT-APPLICATION ON AIRCRAFTS . 26
HIGH ALLOY STEELS 28
ALLOYING INGREDIENTS 30
PROPERTIES OF HHT-MATERIAL 32
STEEL ALLOYS AND THEIR HEAT TREATMENT 42
SURFACE PROTECTION 50

TESTING OF FERROUS MATERIALS 52
HARDNESS TESTING 52
IMPACT TESTING 60
FATIGUE STRENGTH TESTING 64

M6.2 AIRCRAFT MATERIALS - NON FERROUS .. 68

CHARACTERISTICS, PROPERTIES & IDENTIFICATION NON-FERROUS MATERIALS 68
TITANIUM 68
PROPERTIES OF TITANIUM 70
USE OF TITANIUM IN AIRCRAFT CONSTRUCTION .. 71
HANDLING OF TITANIUM 74
PURE ALUMINIUM AND ALUMINIUM ALLOYS 76
ALUMINIUM ALLOYS 78
SURFACE PROTECTION 84
STANDARDIZATION OF ALUMINIUM MATERIALS ... 86
MARKING OF ALUMINIUM SHEETS 88
HEAT TREATMENT OF ALUMINIUM ALLOYS 90
TEMPER DESIGNATIONS 96
TEMPER DESIGNATIONS AND MEANING 98
GLARE (GLASS ALUMINIUM REINFORCED LAMINATE) 100
GLARE PROPERTIES 102

TESTING OF NON FERROUS MATERIALS 106
GENERAL 106

M6.3 AIRCRAFT MATERIALS – COMPOSITE AND NON-METALLIC 108

M6.3.1 COMPOSITE AND NON-METALLIC MATERIALS OTHER THAN WOOD AND FABRIC 108

CHARACTERISTICS, PROPERTIES AND IDENTIFICATION OF COMPOSITE AND NON-METALLIC MATERIALS 108
ABBREVIATIONS 108
CONVERSIONS 108
PRODUCTION OF PLASTICS 110
POLYCONDENSATION 112
COMPOSITES GENERAL 114
REINFORCING MATERIALS 118
STYLES OF FABRICS 120
PREPREGS 122
CORE MATERIAL 124
SURFACE TREATMENT OF COMPOSITE MATERIALS 126

SEALANT AND BONDING AGENTS 128

TABLE OF CONTENTS

ADHESIVES 128
RESINS 132
EPOXY RESINS 134
EPOXY RESINS CHARACTERISTICS 136
SURFACE WETTING AND ABSORPTION 138

DETECTION OF DEFECTS/DETERIORATION IN COMPOSITE AND NON-METALLIC MATERIAL 140
DAMAGE TO COMPOSITE STRUCTURE 140
DAMAGE CLASSIFICATION 142
DAMAGE CLASSIFICATION TYPES 144
NON-DESTRUCTIVE INSPECTION TECHNIQUES (NDT) 148
RADIOGRAPHY 152
TYPICAL REPAIRS OF COMPOSITES 154
PREPARATION BEFORE REPAIR 160
REMOVAL OF SURFACE PROTECTION 162
CLEANING AND DEGREASING 164
WATER BREAK TEST 166
WET LAY–UP 168
APPLICABLE WET LAY-UP SEQUENCES 170
VACUUM BAGGING 172

M6.3.2 WOODEN STRUCTURES 180

CONSTRUCTION METHODS OF WOODEN AIRFRAME STRUCTURES 180
WOODEN WING CONSTRUCTION 180
BOX SPAR 182
INSPECTION OF WOODEN STRUCTURES 184

TYPES OF DEFECTS AND DETECTION IN WOOD MATERIAL AND WOODEN STRUCTURES 186

CHARACTERISTICS, PROPERTIES AND TYPES OF WOOD AND GLUE 194
SELECTION AND CONSTRUCTION OF TIMBER COMPONENTS 194
SELECTION CRITERIA FOR CONVERSION 200
REPAIR MATERIALS 202
SYNTHETIC RESIN ADHESIVES 204
PREPARATIONS OF SURFACES 206
APPLICATION OF ADHESIVE 208
TESTING OF ADHESIVE BONDINGS 210

M6.3.3 FABRIC COVERING 212

CHARACTERISTICS, PROPERTIES AND TYPES OF FABRICS 212
MATERIALS 212
PREPARATION OF STRUCTURE 216
COVERING METHODS 216
SEAMS, STITCHES AND STRINGING 218
MISCELLANEOUS METHODS OF FABRIC ATTACHMENT 222
DRAINAGE AND VENTILATION 224
INSPECTION PANELS 226
DOPES 228
WORKING WITH DOPE 232
APPLICATION OF DOPE 234

INSPECTION METHODS, TYPES OF DEFECTS AND REPAIR OF FABRIC COVERING 238
CHECKING OF FABRIC 238
REPAIRS TO FABRIC COVERINGS 240

M6.4 CORROSION 246

FORMATION BY CHEM.– AND GALVANIC PROCESSES, MICROBIOLOGICAL & STRESS 246
CORROSION GENERAL 246
OCCURANCE AND GROWTH OF CORROSION 248
GENERAL CORROSION PROCESSES 250

CORROSION, -TYPES, -IDENTIFICATION, -CAUSES, -SUSCEPTIBILITY AND MATERIAL TYPES 256
CORROSION IDENTIFICATION ON METALS 256
FILIFORM CORROSION 258
STRESS CORROSION 260
ELECTROCHEMICAL CORROSION 262

TABLE OF CONTENTS

ELECTROCHEMICAL SERIES FOR METAL 264
GALVANIC CORROSION 266
PITTING CORROSION 268
INTERGRANULAR CORROSION 270
EXFOLIATION CORROSION 272
FRETTING CORROSION 274
MICROBIAL CORROSION 276
CREVICE CORROSION 278

M6.5 FASTENERS 280

INTRODUCTION 280
LIST OF COMMON ABBREVIATIONS 280
LIST OF CONVERSIONS 280
GENERAL 281
SPECIAL FASTENERS 282

M6.5.1 SCREW THREADS 284

SCREW NOMENCLATURE, THREAD TYPES, STANDARD THREADS, MEASURING SCREW THREADS 284
THREAD MOLDING 284
THREAD STANDARDS 288
THREAD PITCH 292
THREAD PROFILE 292

M6.5.2 BOLTS, STUDS AND SCREWS 294

SPECIFICATION, IDENTIFICATION AND MARKING OF BOLTS AND NUTS 294
BOLTS, SCREWS AND TENSION SCREWS 294
IDENTIFICATION 296
INSTALLATION OF BOLTS 298
STUDS 300
SELF-TAPPING SCREWS (SHEET METAL SCREW) . 306
NUTS 308
LOCKING NUTS 309
HELI-COIL INSERTS 314

M6.5.3 LOCKING DEVICES 322

TAB&SPRING WASHERS, LOCKING PLATES, SPLIT PINS, COTTER PINS, WIRELOCKING AND QUICK RELEASE FASTENERS 322
SAFETYING METHODS 322
NUTS, BOLTS AND SCREWS 324
WIRELOCKING 326
LOCKING DEVICES - WASHERS 330
QUICK-RELEASE FASTENERS 332
COTTER PINS 336
KEYS 338

M6.5.4 AIRCRAFT RIVETS 340

SOLID AND BLIND RIVETS, SPECIFICATION AND IDENTIFICATION, HEAT TREATMENT 340
RIVETS (SOLID RIVETS) 340
RIVET MATERIALS 342
SPECIAL RIVETS 344
HEAT TREATMENT OF AL-RIVETS 348
CHERRY-BUCK TITANIUM SHEAR PIN 350
HI-LOK UND HI-LITE 352
COMMONLY USED COLLARS 354
THE PRINCIPLE FUNCTIONALITY OF HI-LITE FASTENERS 356
HI TIGUE FASTENERS 358
TAPER-LOK 360
TAPER-LOK HEAD MARKS 362
LOCKBOLTS 364
BLIND RIVETS 368
CHERRYLOCK BLIND RIVET 370
CHERRYMAX BLIND RIVET 374
OLYMPIC-LOK RIVETS 378
RIVNUTS 380
DETERMINATION OF RIVET LENGTH 386

M6.6 PIPES AND UNIONS 390

RIGID AND FLEXIBLE PIPES, STANDARD UNIONS, IDENTIFICATION 390

TABLE OF CONTENTS

RIGID AND FLEXIBLE PIPES 390
TUBES AND PIPES/TUBE ASSEMBLIES 392
TUBE FITTINGS 394
FLARELESS FITTINGS 396
FLARE-TYPE FITTING 402
V-BAND CLAMPS 406
HOSES 408

M6.7 SPRINGS 410

TYPES OF SPRINGS, MATERIALS,CHARACTERISTICS AND APPLICATION 410
SPRINGS 410
PROPERTIES OF COMMON SPRING MATERIALS ... 412

M6.8 BEARINGS 414

PURPOSE, LOADS, MATERIALS, CHARACTERISTICS AND APPLICATION OF BEARINGS 414
BEARINGS GENERAL 414
SLIDING BEARINGS 416
ANTI-FRICTION BEARINGS 418

M6.9 TRANSMISSIONS 426

GEAR TYPES AND THEIR APPLICATIONS, BELTS AND PULLEYS, CHAINS AND SPROCKETS 426
TRANSMISSIONS 426
CONTROL CHAINS AND CHAIN WHEELS 428
CHAIN DRIVES 430
TRIM CONTROL 432
COUPLINGS 434
FUNCTION OF GEARS 438
GEAR DRIVES 440
GEAR TYPES 448
TOOTHED-WHEEL GEARS 450
FRICTION GEARS AND CONE PULLEY DRIVES 454
TRANSMISSION COMPONENTS CONTROL MECHANISM 456
PUSH RODS 458
QUADRANTS 458
TORQUE TUBE TRANSMISSIONS 460

M6.10 CONTROL CABLES 462

TYPES OF CABLE, ENDFITTINGS, COMPONENTS, BOWDEN AND FLEXIBLE CONTROL SYSTEMS 462
CONTROL CABLES 462
CABLE TERMINALS 464
CONTROL CABLE (SYSTEM COMPONENTS) 466
TURNBUCKLES 468
CABLE TENSION REGULATOR 470
FLEXIBLE CONTROL SYSTEMS 472
BOWDEN CABLES 484

CABLE TYPES, CONSTRUCTION AND CHARAKTERISTICS 490

M6.11 ELECTRICAL WIRING AND CABLES 490

SHIELDING 492

HIGH-TENSION AND CO-AXIAL CABLE 494
COAXIAL CABLES 494

CABLE TYPES, CONSTRUCTION AND CHARAKTERISTICS 496
WIRES IN FIRE ALARM SYSTEMS 496
THERMOCOUPLE – WIRING 498
AROMATIC POLYIMIDE WIRING 500
CURRENT CARRYING CAPACITY OF WIRES 502
IDENTIFICATION 504
WIRE IDENTIFICATION – BOEING 506
BOEING WIRE LABELING 506
WIRING IDENTIFICATION – BOEING 507
MANUFACTURERS IMPRINT – AIRBUS 508
WIRING IDENTIFICATION – AIRBUS 510
CRIMPED CONNECTIONS 518
CONNECTING ALUMINUM AND COPPER WIRES ... 520
COPALUM SPLICES AND TERMINALS 522

CONNECTIONS 524

TABLE OF CONTENTS

CONNECTORS 524

TABLE OF FIGURES

Figure 1 Metallic and Non-Metallic Materials . . . 3
Figure 2 Stresses . . . 7
Figure 3 Crystals and Cells . . . 13
Figure 4 Material Development . . . 15
Figure 5 Prognosticated Material Proportions on Aircraft . . . 17
Figure 6 General Applications for Steel (A320) . . . 21
Figure 7 HHT-Application General . . . 23
Figure 8 Material Designations . . . 25
Figure 9 HHT-Application Main Gear . . . 27
Figure 10 CRES-Application General . . . 29
Figure 11 Alloying Elements . . . 31
Figure 12 Notch Sensitivity . . . 35
Figure 13 Cold-Shortness Sensitivity . . . 37
Figure 14 Hydrogen Embrittlement . . . 39
Figure 15 Cutout of the Fe - C - Diagram . . . 41
Figure 16 Influence of Tempering on the Strength . . . 42
Figure 17 Properties of Steel-Alloys . . . 43
Figure 18 Fe–C–Diagram . . . 45
Figure 19 Overview Heat Treatment Processes . . . 47
Figure 20 Brinell Hardness Tester . . . 53
Figure 21 Rockwell Hardness Tester . . . 55
Figure 22 Riehle and Ernst Tester . . . 57
Figure 23 Vickers Hardness Tester . . . 59
Figure 24 Standard Impact Test-Pieces . . . 61
Figure 25 Avery-Denison Universal Impact-Testing Machine . . . 63
Figure 26 Full Scale Fatigue Test A380 . . . 65
Figure 27 Full Scale Fatigue Test A380–Wing . . . 67
Figure 28 Application of Titanium Alloy in Aircraft Structure . . . 69
Figure 29 Properties of Aluminium . . . 77
Figure 30 Aluminium Base Materials . . . 79
Figure 31 Aluminium–Alloys . . . 81
Figure 32 Cladding of Aluminium Alloys . . . 85
Figure 33 AA-Numbering System . . . 86
Figure 34 Rubber Stamp Information . . . 89
Figure 35 Methods of Heat–Treatment . . . 91
Figure 36 Temperature Schedule of Heat–Treatment . . . 93
Figure 37 Soft Annealing of Aluminium Alloy . . . 95
Figure 38 Example for Heat Treatment Designation . . . 97
Figure 39 GLARE (GLass Aluminium REinforced Laminate) . . . 101
Figure 40 GLARE Application A380–800 . . . 103
Figure 41 Comparsion of Blast- to Non-Blast-resistant Cargo Containers . . . 105
Figure 42 Overview of Plastic Materials . . . 109
Figure 43 Polymerisation . . . 111
Figure 44 Polyaddition . . . 113
Figure 45 Usage of Composite on Aircraft Structures . . . 115
Figure 46 Composite Application on A320 . . . 117
Figure 47 Reinforced Plastics . . . 119
Figure 48 Styles of Fabrics . . . 121
Figure 49 Standard and Bonding Prepreg . . . 123
Figure 50 Different Core Materials . . . 125
Figure 51 Electrical Bonding of Composites . . . 127
Figure 52 Adhesive Application Example . . . 131
Figure 53 Surface Wetting . . . 139
Figure 54 Composite Damage Evaluation According to SRM . . . 141
Figure 55 Resistance To Lightning Strike . . . 145
Figure 56 Damage Classification . . . 147
Figure 57 NDT Techniques 1 . . . 149
Figure 58 Ultrasonics . . . 151
Figure 59 X-Ray Method . . . 153
Figure 60 Typical Edge Delamination Repair . . . 155
Figure 61 Repair of Covering and Honeycomb . . . 157
Figure 62 Resin Injection Repairs . . . 159
Figure 63 Area Preparation . . . 161
Figure 64 Removal of Surface Protection . . . 163
Figure 65 Cleaning and Degreasing . . . 165
Figure 66 Water Break Test . . . 167
Figure 67 Wet Layup . . . 169
Figure 68 Wet Layup Sequence . . . 171
Figure 69 Vacuum Bagging . . . 173

TABLE OF FIGURES

Figure 70 Typical Vacuum Bagging Operation 175
Figure 71 Truss-Type Wing 181
Figure 72 Spars for Fabric-Covered Truss-Type Wings 183
Figure 73 Wood Construction Methods 185
Figure 74 Example of a Deformed Single Skin Structure 187
Figure 75 Glue Line Checks 189
Figure 76 Check for Water Penetration 191
Figure 77 Division of Rough Material 195
Figure 78 Movement in Wood Once Dried 197
Figure 79 Cutting Timber 199
Figure 80 Wood Defects 201
Figure 81 Considerations when Gluing Wood 205
Figure 82 Wing Rib Repairs 207
Figure 83 Repair of a Trailing Edge 209
Figure 84 Lap Seam 215
Figure 85 Attachment of Fabric by Strip 217
Figure 86 Seams 219
Figure 87 Typical Stringing 221
Figure 88 Fabric Attachment 223
Figure 89 Drainage Eyelets (Grommets) 225
Figure 90 Inspection Panels 227
Figure 91 Dope Constituents 229
Figure 92 Portable Tester 239
Figure 93 Repairs by Stitches 241
Figure 94 Repair by Darning or „Normal Insertion“ 243
Figure 95 Alternative Insertion Repair 245
Figure 96 Corrosion on Metals 247
Figure 97 Origin and Expansion of Corrosion 249
Figure 98 Electrode Reaction and Galvanic Element 251
Figure 99 Chemical Corrosion 253
Figure 100 Microbial and Stress Corrosion 255
Figure 101 Corrosion of Steel and Aluminium 257
Figure 102 Filiform Corrosion 259
Figure 103 Stress Corrosion 261
Figure 104 Electrochemical Corrosion 263
Figure 105 Electrochemical Series 265
Figure 106 Galvanic Corrosion 267
Figure 107 Pitting Corrosion 269
Figure 108 Intergranular Corrosion 271
Figure 109 Exfoliation Corrosion 273
Figure 110 Fretting Corrosion 275
Figure 111 Microbial Corrosion 277
Figure 112 Crevice Corrosion 279
Figure 113 Single- and Multiple-Start Threads 285
Figure 114 Denomination of Thread Parts 287
Figure 115 Threads 289
Figure 116 Screw Pitch Gauge 293
Figure 117 Types of Fastener Heads and Recesses 295
Figure 118 Screw Identification 297
Figure 119 Installation of Bolts 299
Figure 120 Examples of Studs and Their Use 301
Figure 121 Stud Insertion/Removal 303
Figure 122 Stud Removal 305
Figure 123 Self-Tapping Screws 307
Figure 124 Anchor Nuts 311
Figure 125 Heli-Coil Insertion 315
Figure 126 Heli-Coil Installation Data 317
Figure 127 Heli-Coil Installation Data 319
Figure 128 Typical Heli-Coil Extractor Tool 321
Figure 129 Material for Lockwire Application 323
Figure 130 Examples for Wirelocking 325
Figure 131 Locking of Screws (1) 327
Figure 132 Locking of Screws (2) 328
Figure 133 Locking of Electric Connectors 329
Figure 134 Other Locking Devices 331
Figure 135 Camloc Fastener 333
Figure 136 Dzus and Airloc Fasteners 335
Figure 137 Cotter Pins 337
Figure 138 Keys 339
Figure 139 Head Types of Solid Rivets 341

TABLE OF FIGURES

Figure 140 Rivet Head Identification Markings 343
Figure 141 Rivet Heads 345
Figure 142 Part Number Example 347
Figure 143 Heat Treatment of Rivets 349
Figure 144 Cherrybuck - General 351
Figure 145 Standard Hi-Lok 353
Figure 146 Hi-Lok Part Number 355
Figure 147 Hi-Lok/Hi-Lite Comparison 357
Figure 148 HI TIGUE Fastener with Flush Head 359
Figure 149 Hi-Lok vs. Taper-Lok, Stress Pattern 361
Figure 150 Head Marking (TL) 363
Figure 151 Lockbolts 365
Figure 152 Installation Sequence 367
Figure 153 Blind Rivet General 369
Figure 154 Cherrylock and Cherrylock Bulbed 371
Figure 155 Cherrylock Bulbed 373
Figure 156 CherryMAX 375
Figure 157 CherryMAX Setting Steps 377
Figure 158 Olympic-Lok Rivets 379
Figure 159 Riv-Nut 381
Figure 160 Jo Bolt 383
Figure 161 Jo Bolt Driving Sequence 385
Figure 162 Hi-Lok Grip Scale 387
Figure 163 Rivet Length Determination 389
Figure 164 Wall Thickness of Hydraulic Pipes 391
Figure 165 A380 Main Hydraulic Architectur 393
Figure 166 Connection Examples 395
Figure 167 MS Fitting 397
Figure 168 Nonpermanent Harrison-Type Fitting 399
Figure 169 Permaswage Fitting 401
Figure 170 Flare Fittings 403
Figure 171 Flared Fitting Types 405
Figure 172 Duct Clamps 407
Figure 173 Hoses 409
Figure 174 Common Spring Types 411
Figure 175 Examples of Spring Applications 413
Figure 176 Type of Bearing Loads 415
Figure 177 Sliding Bearing 417
Figure 178 Anti-Friction Bearing 419
Figure 179 Radial and Axial Bearings 421
Figure 180 Common Anti-Friction Bearing Types 423
Figure 181 Spherical Roller Bearing 424
Figure 182 Tapered Roller Bearing 424
Figure 183 Tapered Roller Bearing: Advantages 425
Figure 184 Transmissions 427
Figure 185 Typical Chain Assembly Arrangements 429
Figure 186 Chain Drives 431
Figure 187 Trim Control 433
Figure 188 Sleeve and Disc Coupling 435
Figure 189 Movable Couplings 437
Figure 190 Gear Box Example 439
Figure 191 Gear Drives 441
Figure 192 Spur Gears 443
Figure 193 Bevel Gears 445
Figure 194 Helical and Worm Gears 447
Figure 195 Stepped Pulley Drive 449
Figure 196 Stepped Transmission Gear Drive 451
Figure 197 Driving-Key-Type Gear 453
Figure 198 Friction Gear and Cone Pulley Drive 455
Figure 199 Control Mechanism 457
Figure 200 Push Rods and Quadrants 459
Figure 201 Torque Tubes 461
Figure 202 Build-Up of Cables 463
Figure 203 Cable Terminals 465
Figure 204 Elements of the Cable System 467
Figure 205 Locking of Turnbuckles 469
Figure 206 Cable Tension Regulator 471
Figure 207 Typical Teleflex System 473
Figure 208 Types of Teleflex Cable and Typical Sliding End Fittings 475
Figure 209 Teleflex System: Components 477

TABLE OF FIGURES

Figure 210 Teleflex Distributor Box and Torsion Drive 479
Figure 211 Teleflex Conduit Connectors 481
Figure 212 Assembly of Teleflex Sliding End Fitting 483
Figure 213 Bowden Control Components (1) 485
Figure 214 Bowden Control Components (2) 487
Figure 215 Wire and Cable 490
Figure 216 A380 Wire 491
Figure 217 Shieldings 492
Figure 218 Shielded Wires 493
Figure 219 Coax Wire Connection 494
Figure 220 Structure of a Coax Cable 494
Figure 221 Coax Cables 495
Figure 222 Type 1 Wire 496
Figure 223 Fire Resistant Wires 497
Figure 224 EGT Connection 499
Figure 225 AP Wire Structure 500
Figure 226 ARC Tracking in Laboratory Experiment 501
Figure 227 Capacity in Wire Harnesses 502
Figure 228 Capacity Depending on Type of Insulation 503
Figure 229 Printing Colors 504
Figure 230 NSA/BMS Standard Identification 505
Figure 231 Boeing Standard Wire Part Number Data 506
Figure 232 Wire Number 1 507
Figure 233 Wire Number 2 507
Figure 234 Part Numbers Composition 508
Figure 235 US WireType/Metric Wire Type 509
Figure 236 Wire Identification 510
Figure 237 Wire Number Airbus 510
Figure 238 Airbus Wiring 511
Figure 239 Ground Wire Identification/Spare Wire Identification 512
Figure 240 Ground Wires 513
Figure 241 Spare Wires 513
Figure 242 Customer/Service Bulletin/Shielded Wire Numbers 514
Figure 243 7000 and 9000 Wiring Number 515
Figure 244 Sensitive Wires 516
Figure 245 Sensitive Wire Identification 517
Figure 246 Crimping Tool for PIDG 519
Figure 247 AL/CU Connections 521
Figure 248 COPALUM Connections 523
Figure 249 Plugs and Receptacles 525
Figure 250 Various Connectors 527
Figure 251 Plug and Clamshell Construction 529
Figure 252 Examples of diff. Shell Sizes and Contact Arrangements .. 531
Figure 253 Selecting the Procedure 532
Figure 254 Plug Seals 532
Figure 255 Sealing of Contact Cavities 533