Fundamentals
M3
ELECTRICAL FUNDAMENTALS

Rev.-ID: 1SEP2014
Author: KrA
For Training Purposes Only
©LTT Release: Sep. 18, 2014

EASA Part-66
CAT B1

Training Manual

Lufthansa Technical Training

For training purposes and internal use only.

© Copyright by Lufthansa Technical Training (LTT).

LTT is the owner of all rights to training documents and training software.

Any use outside the training measures, especially reproduction and/or copying of training documents and software – also extracts there of – in any format at all (photocopying, using electronic systems or with the aid of other methods) is prohibited.

Passing on training material and training software to third parties for the purpose of reproduction and/or copying is prohibited without the express written consent of LTT.

Copyright endorsements, trademarks or brands may not be removed.

A tape or video recording of training courses or similar services is only permissible with the written consent of LTT.

In other respects, legal requirements, especially under copyright and criminal law, apply.

Lufthansa Technical Training

Dept HAM US
Lufthansa Base Hamburg
Weg beim Jäger 193
22335 Hamburg
Germany

Tel: +49 (0)40 5070 2520
Fax: +49 (0)40 5070 4746
E-Mail: Customer-Service@LTT.DLH.DE

www.Lufthansa-Technical-Training.com

Revision Identification:

- The date given in the column "Revision" on the face of this cover is binding for the complete Training Manual.
- Dates and author's ID, which may be given at the base of the individual pages, are for information about the latest revision of that page(s) only.
- The LTT production process ensures that the Training Manual contains a complete set of all necessary pages in the latest finalized revision.

© Lufthansa Technical Training

M3 ELECTRICAL FUNDAMENTALS

FOR TRAINING PURPOSES ONLY!

© Lufthansa Technical Training

M3.1 ELECTRON THEORY

STRUCTURE AND DISTRIBUTION OF ELECTRICAL CHARGES

Atoms

General

All atoms are arranged according to the same basic principle:

The centre of an atom is called nucleus. Electrons move in orbits around this nucleus.

Components

All in all, each atom is made up of the following components:

- Protons
- Neutrons
- Electrons

The protons and neutrons are in the nucleus. The electrons move around the nucleus in different orbits.

Elements

Elements are composed of one single kind of atoms. These atoms then all have the same number of protons.

Here are some examples:

- Hydrogen - 1 proton
- Helium - 2 protons
- Oxygen - 8 protons
- Copper - 29 protons.

Shells

These various orbits are also called shells. They can be compared to the different layers of an onion, for example.

FOR TRAINING PURPOSES ONLY!

© Lufthansa Technical Training

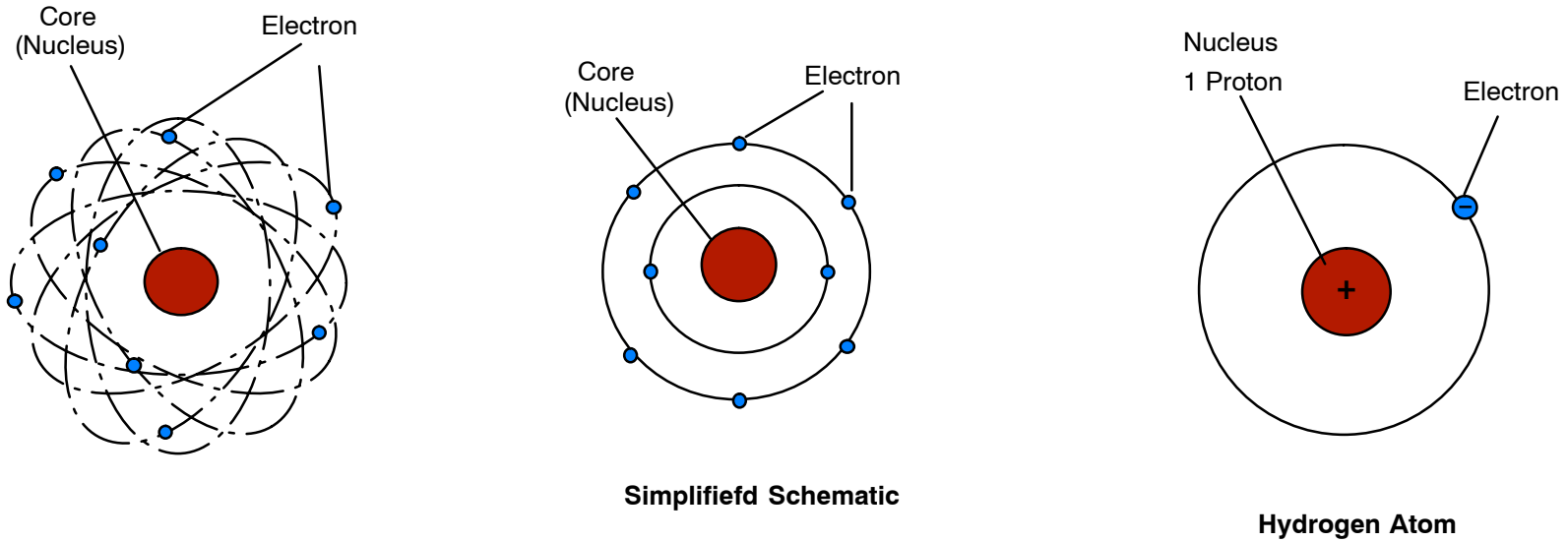

Figure 1 Composition of Atoms

FOR TRAINING PURPOSES ONLY!

© Lufthansa Technical Training

Shell Model

General

Nils Bohr developed the theory of atomic structure. This is the shell model.

All electrons of an atom are situated in different shells.

Each of these shells represents a fixed quantum of energy: the further away from the nucleus an electron is, the higher is its potential energy.

Since all systems existing in nature try to contain as little energy as possible, the electrons are placed on the inner shells first and then on the outer ones.

Noble Gas Configuration

Atoms with eight electrons on the outermost shell have the most favourable energy level. This condition is called noble gas configuration.

Valence Electrons

The number of electrons on the outermost shell determine the way an element reacts. These electrons are also called valence electrons.

Band Theory

General

Wolfgang Pauli developed the exclusion principle. This is the band theory.

According to Pauli no two electrons in an atom (compound) can have identical quantum states.

For that reason, every shell is shown as a band. Every band represents a single shell and states the different energy levels of all electrons contained in it.

Energy Levels

There is a gap between the bands representing the different energy levels occurring between them.

FOR TRAINING PURPOSES ONLY!

© Lufthansa Technical Training

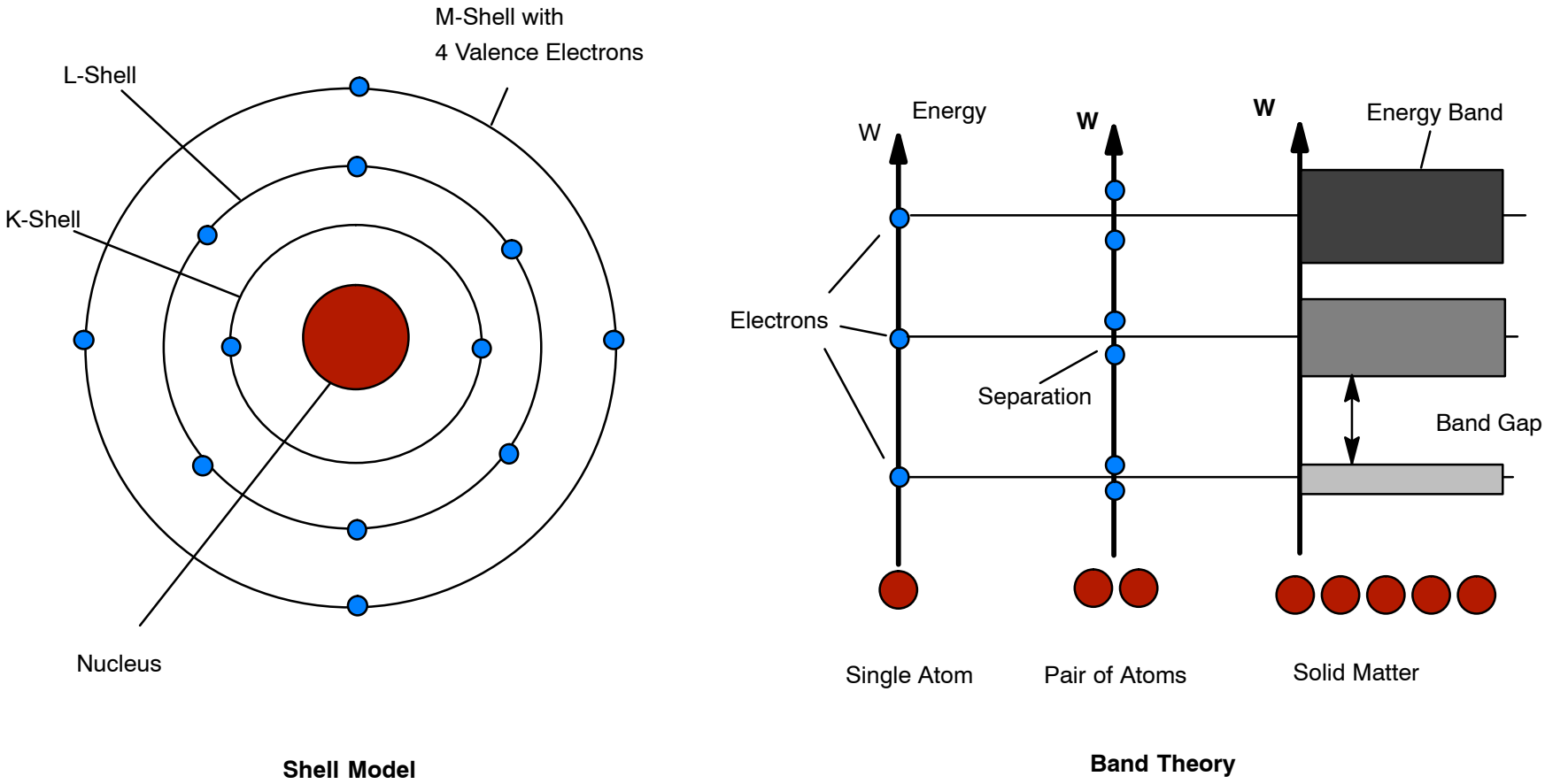

Figure 2 Shell Model and Band Theory

FOR TRAINING PURPOSES ONLY!

© Lufthansa Technical Training

Distribution of charges within an atom

Electrical Charge

Some particles contained within an atom are electrically charged. Consequently, these particles can't be neutral. An atom as a whole, however, is neutral.

Protons

Protons are positively charged particles inside the nucleus.

Neutrons

Neutrons are electrically neutral particles inside the nucleus.

They make sure that the protons stay within the nucleus.

Electrons

Electrons are negatively charged particles orbiting around the nucleus in so called shells. They are attracted by the positively charged protons and therefore can't be expelled from the atom by the centripetal force.

Mass

Protons and neutrons make up the mass of an atom, electrons have nearly no mass at all.

Charges

All positive charges of an atom are within the nucleus, while all negative charges orbit around the nucleus.

The number of protons is equal to the number of electrons.

Atoms are electrically neutral.

This neutral condition is the basic state of matter.

FOR TRAINING PURPOSES ONLY!

© Lufthansa Technical Training

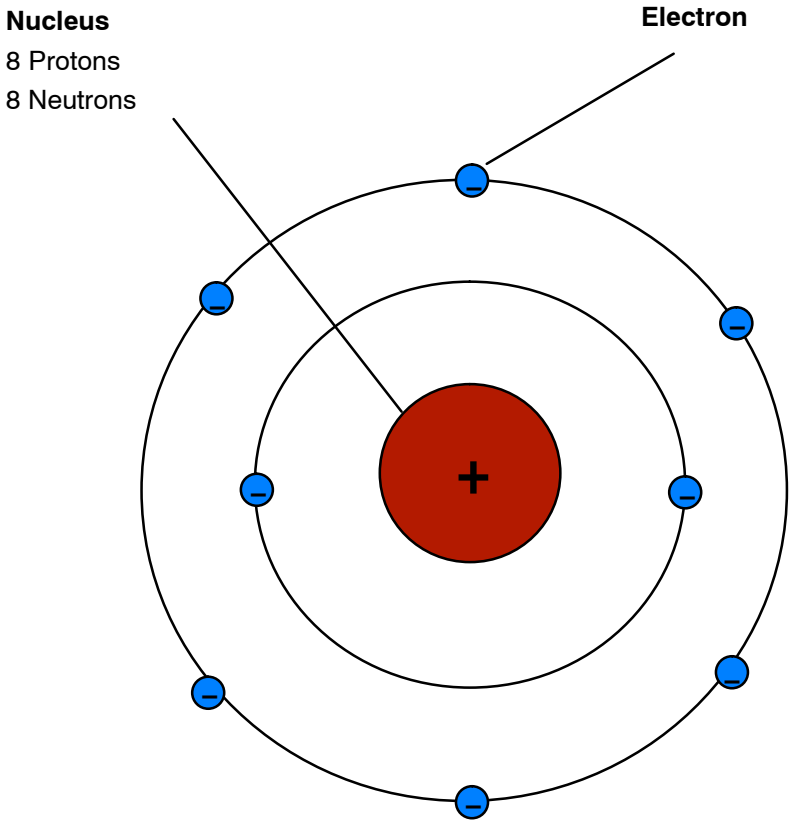

Oxygen Atom

Figure 3 Distribution of Charges within an Atom

FOR TRAINING PURPOSES ONLY!

© Lufthansa Technical Training

Ions

General

Ions are atoms, which have more (or less) electrons than protons.

In that case, the number of positive and negative charges is not equal any more. The atom is not electrically neutral. Depending on the number of electrons, the atom is now positively or negatively charged.

Ions are electrically charged Atoms.

Example

The element oxygen contains eight protons and therefore also eight electrons.

If one electron is removed, there are still eight (positive) protons, but only seven (negative) electrons left. This atom is now a positively charged oxygen ion.

If an electron is added to the previously neutral atom a surplus of negative charges is available so the atom will become negatively charged.

If one electron is added to a normal oxygen electron, so it is negative charged.

In the figure below two electrons are added. This happens very often as a result of chemical processes.

FOR TRAINING PURPOSES ONLY!

© Lufthansa Technical Training

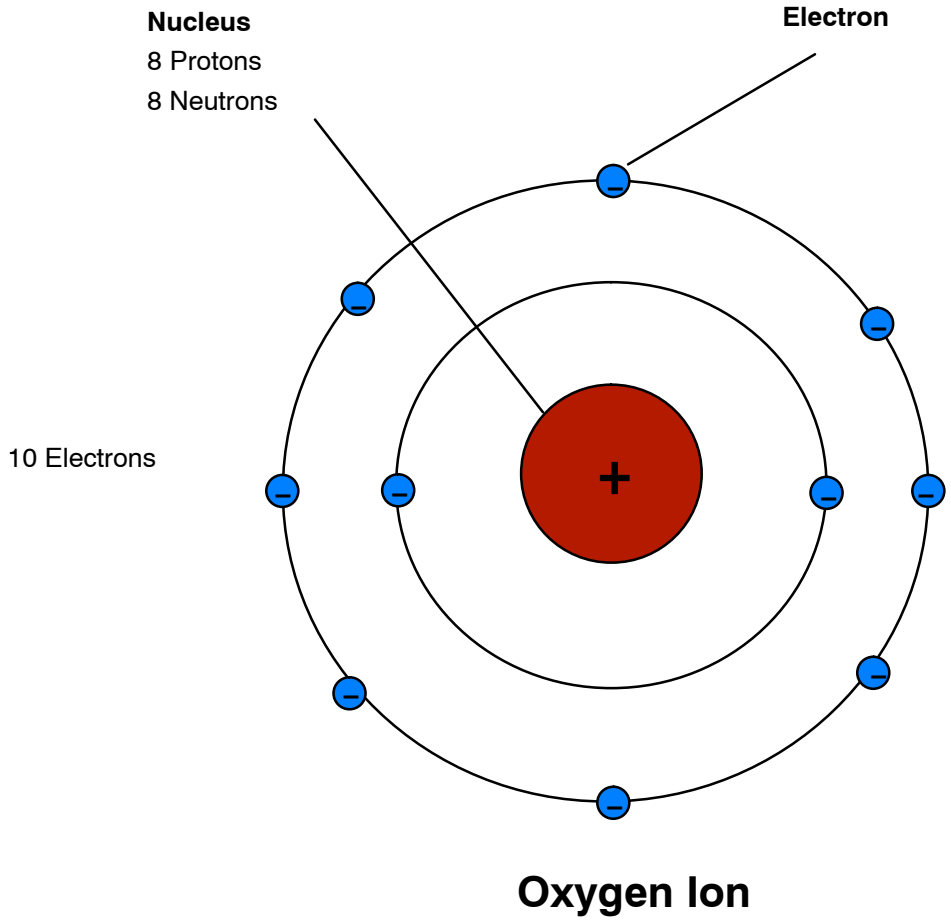

Oxygen Ion

Figure 4 Ion

FOR TRAINING PURPOSES ONLY!

© Lufthansa Technical Training

Molecules

General

Matter is composed of several molecules. The molecule is the smallest unit of a substance that exhibits the physical and chemical properties of the substance. All molecules of a particular substance are exactly alike and unique to that substance.

A molecule consists of a fixed amount of atoms.

- in an element, all atoms of a molecule are the same.
- in a chemical compound, each molecule has atoms from at least two different elements.

Not all elements form molecules.

Example

Hydrogen is normally found as a gas. This gas consists of molecules which have two hydrogen atoms each.

Compounds

General

Compounds are pure substances made up of different elements (at least two) which have been joined together by a chemical reaction. Therefore the atoms are difficult to separate.

Each composition has a fixed number of atoms with a constant relation of the number of elements.

The properties of a compound are different from the atoms that make it up.

Analysis

Splitting of a compound is called analysis.

Building of Chemical Compounds

When mixed, some elements form molecules immediately.

Other mixtures of elements need energy, i. e. heat, to form molecules.

However, many mixtures of elements do not form molecules at all.

Example

Water always has two hydrogen atoms and one oxygen atom which form a water molecule.

FOR TRAINING PURPOSES ONLY!

© Lufthansa Technical Training

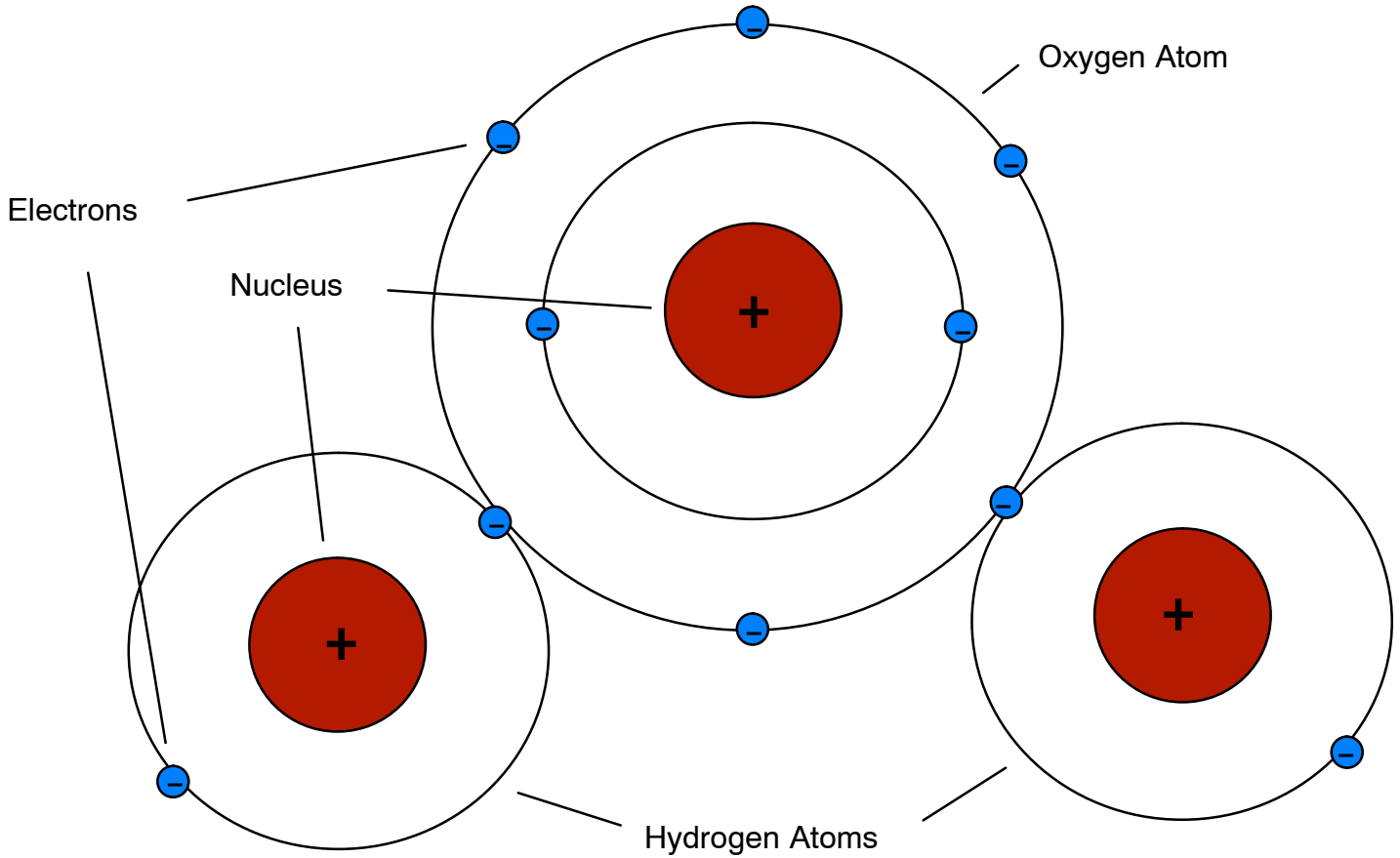

WATER MOLECULE

Figure 5 Chemical Compound

FOR TRAINING PURPOSES ONLY!

© Lufthansa Technical Training

MOLECULAR STRUCTURE OF CONDUCTORS, SEMICONDUCTORS AND INSULATORS

Conductors

Metals are a good example to explain the structure of conductors.

In a metallic bond the atoms are close packed and have a crystal lattice. This high density allows the electrons on the outer layer to separate from their atoms and to move freely within the atomic structure, i. e. electrons jump from one (fixed) atom to the next.

The reason for the good conductivity of metal is the high mobility of its electrons.

Examples are copper and aluminium.

Carbon is also a good conductor.

Insulators/Non – Conductors

In the molecular structure of insulators the electrons are tightly connected to the atoms/molecules which prevent them from breaking away.

Examples are mica and porcelain.

Semiconductors

In the molecular structure of semiconductors, as in many other materials, several atoms share the electrons on the outer layer in such a way that each atom is provided with eight electrons. This arrangement of atoms with 8 electrons in the valence orbit is chemically very stable.

This sharing principle applies only if there are exactly eight electrons in the outer layer, i. e. only atoms of group 14 (e. g. silicon, germanium) can combine among themselves or atoms of group 13 (gallium) and group 15 (arsenic).

Regardless of the material used the amount of eight electrons must always be assured.

By nature they are Non-Conductors.

Conductivity is produced by adding other foreign atoms (doping), by heat (increase mobility of electrons) or by light.

The amount of charges available for current conduction (in this case: electrons) is approx. $1{,}5 \times 10^{10}$ per cm^3 at room temperature.

Examples are silicon and germanium.

FOR TRAINING PURPOSES ONLY!

© Lufthansa Technical Training

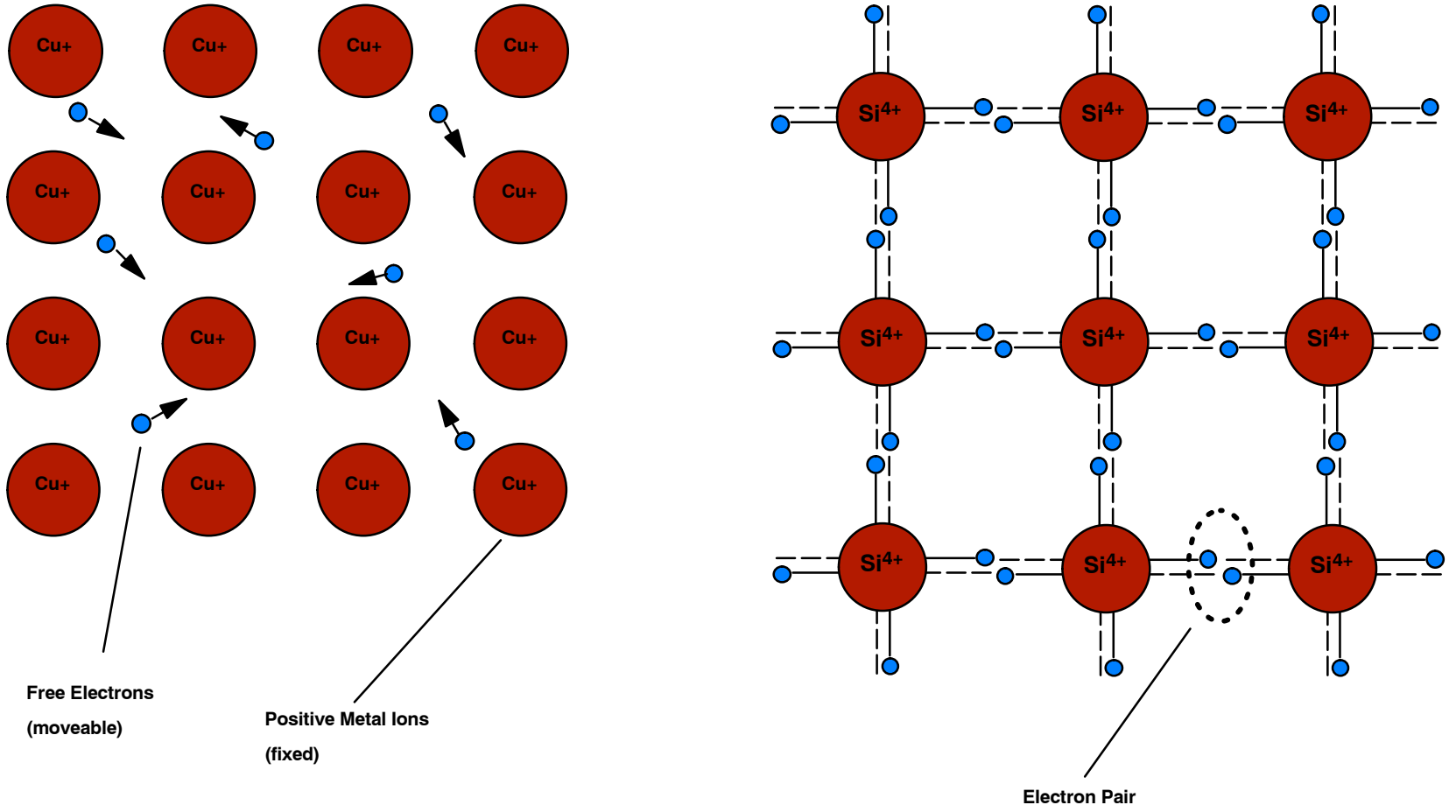

Figure 6 Molecular Structure of Conductors and Semiconductors

FOR TRAINING PURPOSES ONLY!

© Lufthansa Technical Training

M3.2 STATIC ELECTRICITY AND CONDUCTION

ELECTROSTATIC LAWS OF ATTRACTION AND REPULSION

Static Electricity

General

We talk about static electricity when we look at electrically charged bodies in which the charges do not move. This is given, when there is no conductor for the charges.

Static electricity can be caused by friction, for example.

When the voltage is very high there may be a discharge with a spark. This happens especially when there is high humidity.

Electrostatic Laws

Attraction and Repulsion

Electric charges can be compared to magnets:

Like charges repel and unlike charges attract.

Electromotive Force

Consequently, electric charges exert forces on one another, even if there is no physical link between them. This force is called electromotive force.

FOR TRAINING PURPOSES ONLY!

© Lufthansa Technical Training

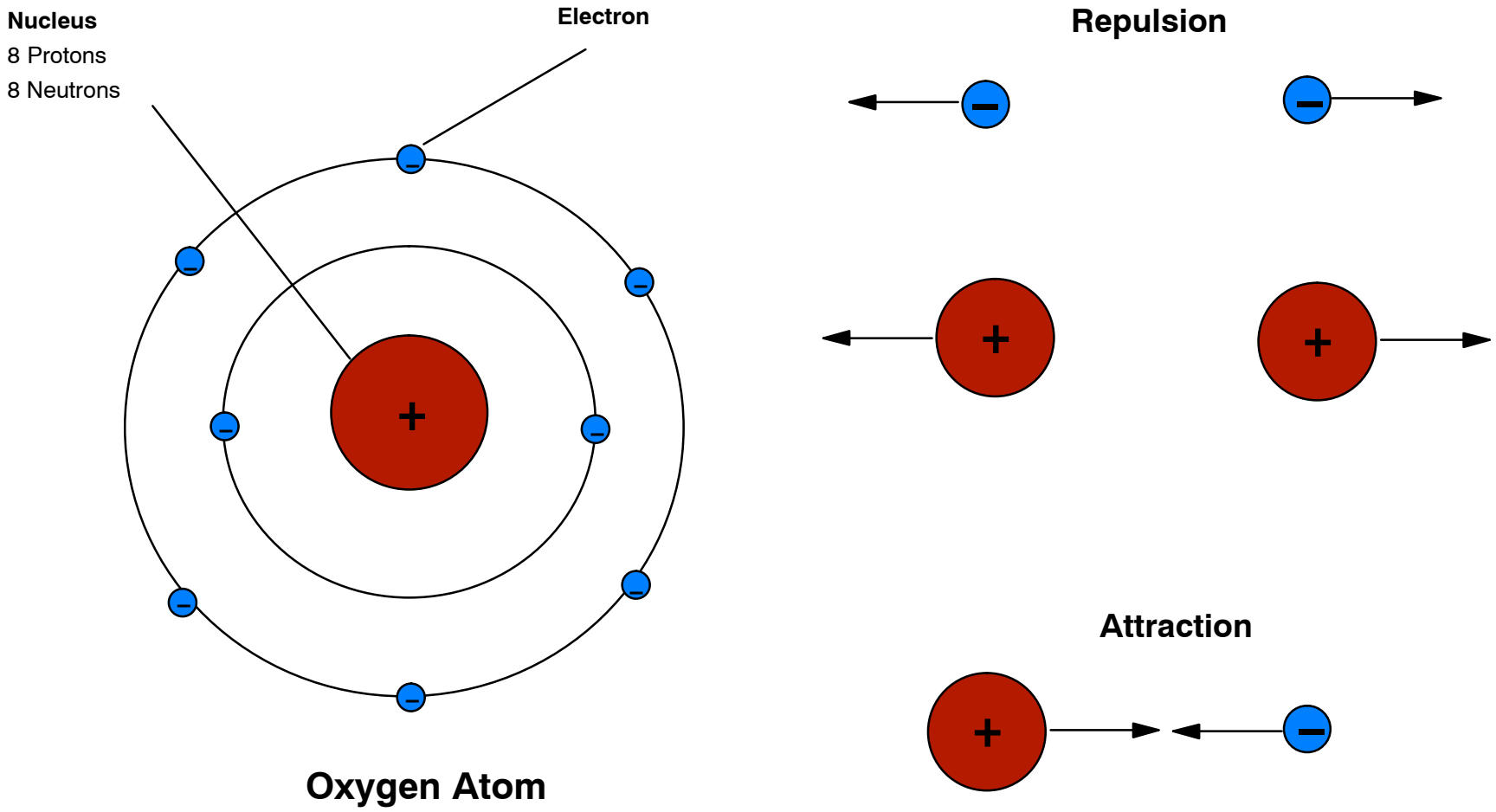

Figure 7 Electrostatic Laws

FOR TRAINING PURPOSES ONLY!

© Lufthansa Technical Training

UNITS OF CHARGE, COULOMB'S LAW

Electrical Charge

Elementary Charge

Every electron carries a negative charge, every proton carries a positive charge. Both have the smallest charge existing, the so called Elementary Charge.

The Elementary Charge of an electron is e = - 0,1602 $\times$ 10^{-18} C (Coulomb), the elementary Charge of a proton is e = + 0,1602 $\times$ 10^{-18} C.

The electrical charge of protons, electrons and ions is referred to as electrical charge Q.

Charge of Bodies

In case several charged items are present the total charge is the sum of the individual charges.

Symbol for Quantity and Unit

The symbol for charge is Q.

The unit of the electrical charge is Coulomb [C] or Ampere-Second [As].

Formula

Theoretically, it is possible to count all missing electrons or supernoumerous electrons and multiply this number with the elemtary charge.

It is also possible to calculate the charge by the intensity of current into the body and the time of this current.

A formula to calculate the charge is the following:

$$Q = I \times t$$

Distribution of Electrostatic Charges

If a body is charged the charges do repel thus distributing the charge all over the body. They usually are found on the surface of the body as this will ensure to have the maximum distance between the charges.

FOR TRAINING PURPOSES ONLY!

© Lufthansa Technical Training

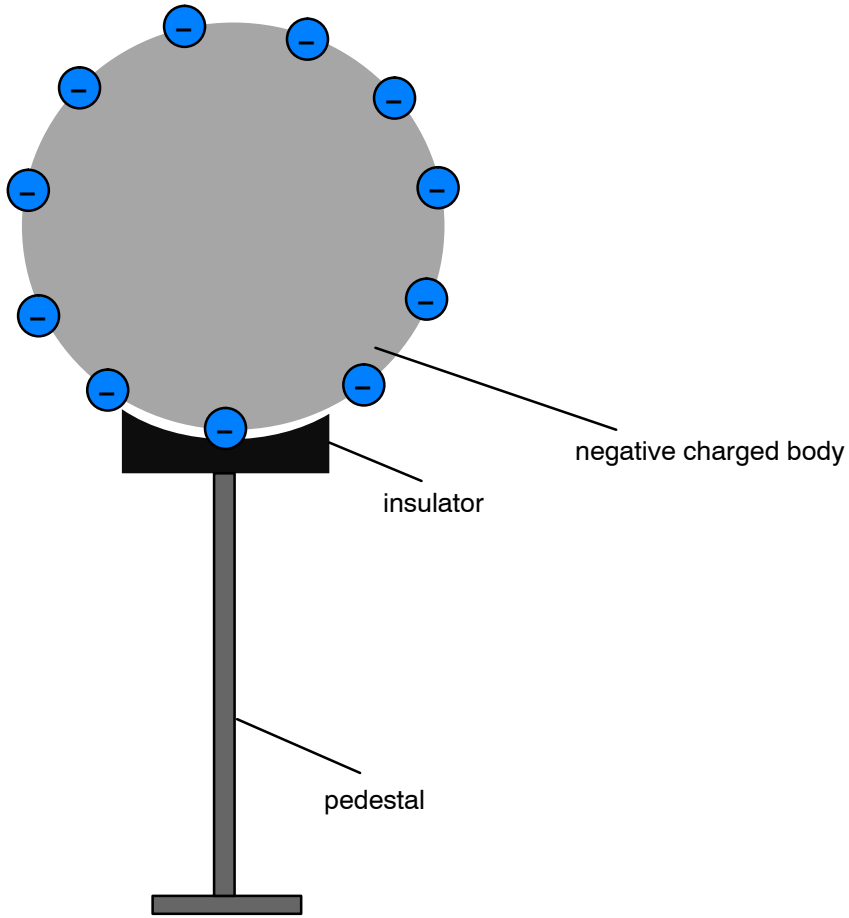

LTT

Figure 8 Electrically Charged Body

FOR TRAINING PURPOSES ONLY!

© Lufthansa Technical Training

Coulomb's Law

General

Charles-Augustin de Coulomb was a French physicist.

Coulomb's Law is about the force electrical charges have on each other.

By this, it is possible to calculate the force F which attracts or repulses two bodies with the electrical charge Q_1 and Q_2.

If both charges have the same prefix, the force will be a repulsion.

Formula

The force can be calculated. For this, many factors have to be regarded. One of the factors is the distance between the bodies.

- F = force
- Q = charge
- ε = permittivity
- d = distance between the charges
- π = pi = 3,14

$$F = \frac{1}{4 \pi \epsilon} \times \frac{Q_1 \times Q_2}{d^2}$$

Permittivity describes the ability of a medium, for example air, to conduct electric fields.

FOR TRAINING PURPOSES ONLY!

© Lufthansa Technical Training

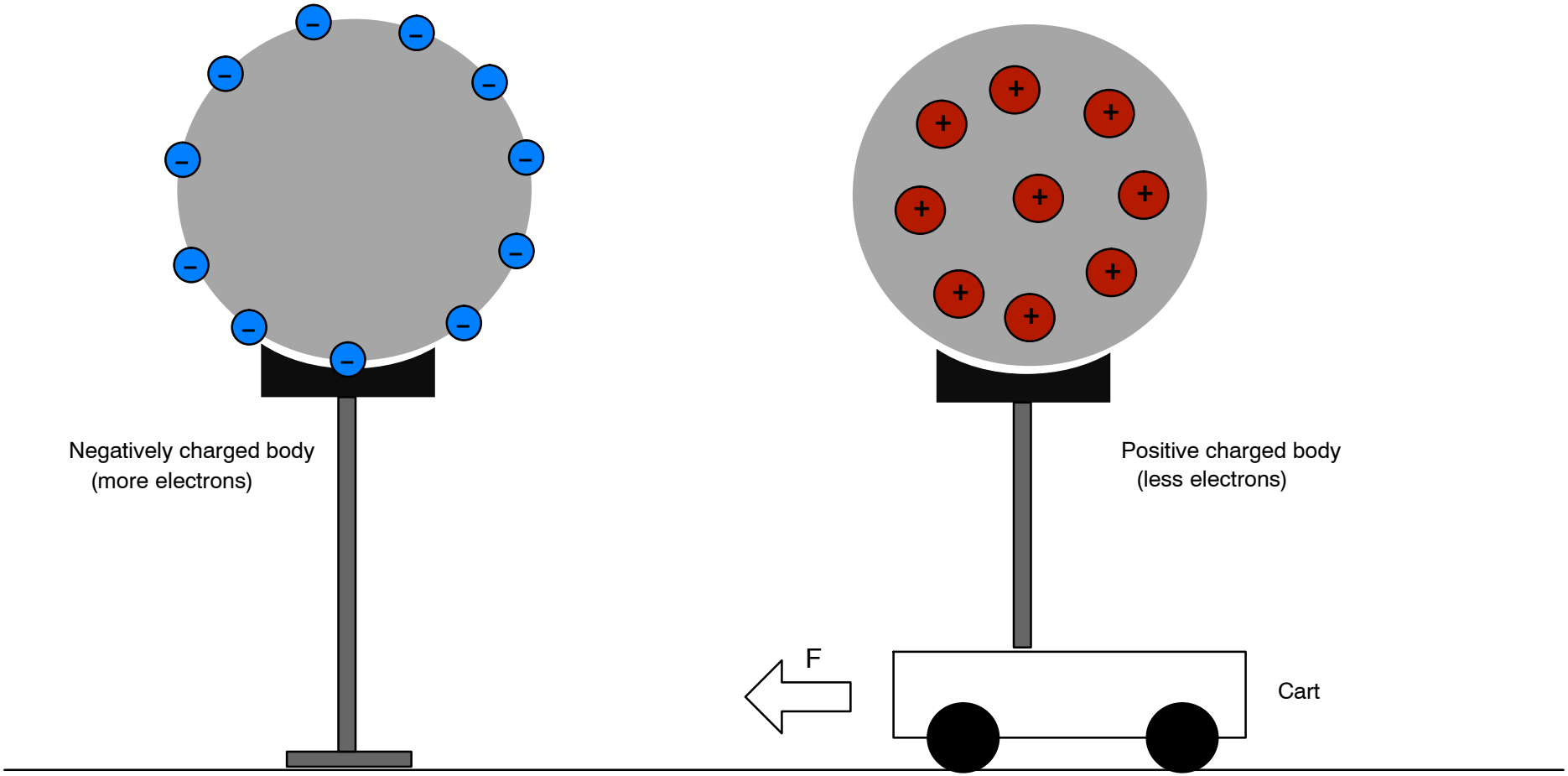

Figure 9 Electrically Charged Bodies

FOR TRAINING PURPOSES ONLY!

© Lufthansa Technical Training

M3.3 ELECTRICAL TERMINOLOGY

ELECTRICAL TERMS, THEIR UNITS AND FACTORS AFFECTING THEM

Electric Current

General

Electrical charges are moved by certain forces. This applies to electrons as well as ions. Electric current is characterized by a flow of charges in a certain direction.

Definition for Current

Electric current is a flow of electrical charges in one general direction.

Current I is determined by the number of charge carriers per second:

$$I = \frac{Q}{t}$$

Symbol for Quantity and Unit

The symbol for current is I.

Current is measured in amperes (A).

Definition for Ampere

1 ampere equals 6.25 x 10^{18} electrons per second.

The current I is 1 ampere (A), if a charge of 1 coulomb flows through a conductor's cross section in 1 second.

Possibilities for Current

In metals and in all solid conductors in general, only the so called free electrons are able to flow. Ions, on the other hand, can move in liquids and gases.

The different types of currents possible in certain environments are as follows:

- in solid conductors (mainly in metals): electron currents
- in conductive liquids: ion currents
- in conductive gases: ion and electron currents
- in a vacuum: electron currents.

Measuring electric current

In order to measure electric current, the charge carriers have to flow through a current meter (ammeter). For this purpose, the circuit is disconnected at a chosen point to insert the ammeter.

Observe the correct polarity when using a DC ammeter (positive to positive pole and negative to negative pole).

The polarity can be neglected when using a AC ammeter.

1 A = 1000 mA

1mA = 0.001 A

1 kA = 1000 A

Current ratings found in everyday life

Electronics / Radio, TV	1 nA ... 100 uA
Electronics / Telecommunications	1 mA ... 10 A
Appliances / domestic or commercial	100 mA ... 50 A
Energy transfer	100 A ... 10 kA
Lightning	up to 200 kA
Nuclear technology	up to 1 MA

DC and AC

There are two basic types of electric current:

Direct current (DC) and alternating current (AC).

A constant flow of charge carriers in one direction is called direct current.

If the flow of carriers changes its direction and magnitude repeatedly in a certain period of time, it is called alternating current.

FOR TRAINING PURPOSES ONLY!

© Lufthansa Technical Training

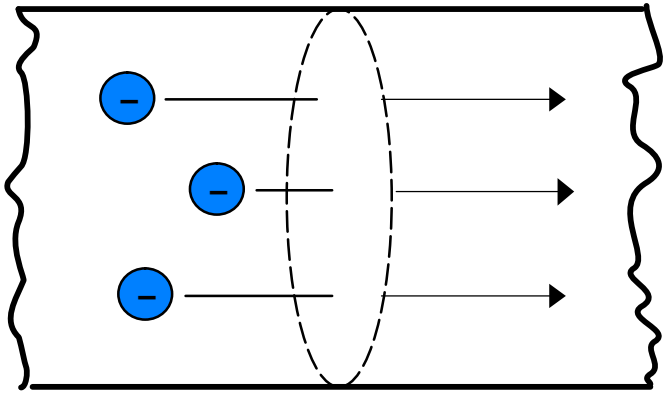

1 Ampere = 6,25 x 10^{18} Electrons / second

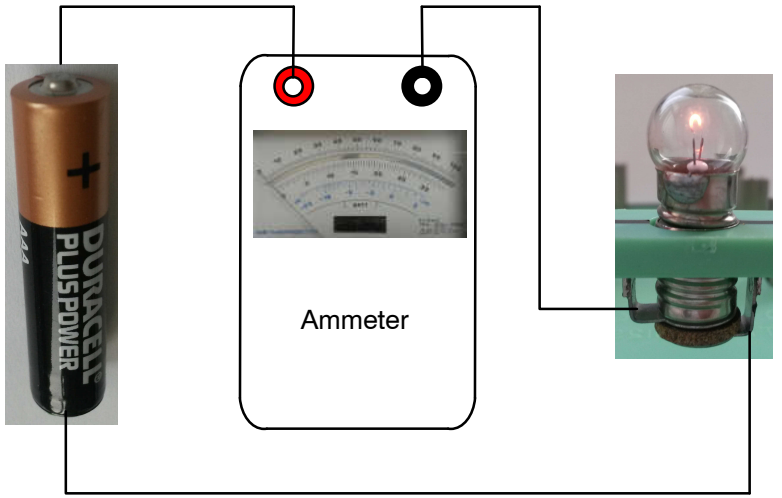

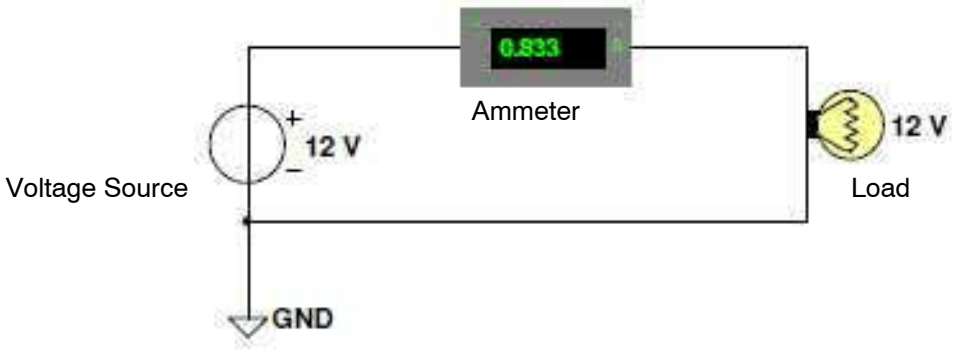

Figure 10 Metering Current

FOR TRAINING PURPOSES ONLY!

© Lufthansa Technical Training

Effects caused by Electrical Current

As you already know, electricity itself is invisible and only its effects are perceptible.

Such effects are shown in the figure.

FOR TRAINING PURPOSES ONLY!

© Lufthansa Technical Training

HEATING EFFECT ALWAYS





Power Heating
Soldering Iron
Fuse

LIGHT IN GASES IN SOME SEMICONDUCTORS

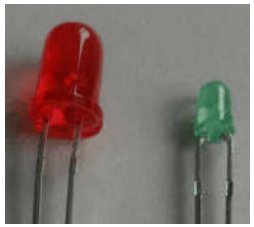

Light Emitting Diode
Glow Lamp

EFFECTS ON HUMANS AND ANIMALS



Electrical Shock

MAGNETIC EFFECT ALWAYS



Magnetic Coil
Electromagnetic Door Openers

CHEMICAL EFFECT IN CONDUCTIVE LIQUIDS



Galvanic Elements on Load
Charging Process in Secondary Cells

Figure 11 Effects of Electrical Current

FOR TRAINING PURPOSES ONLY!

© Lufthansa Technical Training

The Character of Electrical Current Conduction

General

For the electrical current (here in solid bodies) a directed movement of electrons is necessary. So, these electrons must be enabled to leave their atom and move to another one.

Conduction Band

Another band for the electrical current conduction is required: the so called conduction band. We are dealing with an energy level which allows the shifting of electrons. Since electrons are linked to their atoms, it is necessary to supply the electron with energy. As a result, the electron can move from one atom to the next - the electron is in the conduction band.

Conductors

In the case of metals, the valence band and the conduction band partially overlap. Because of this, no energy supply is required to move the electron to the conduction band. We are dealing with highly conductive material.

The mentioned overlap must not be total, because this would prevent the movement of electrons.

You can use a motorway to demonstrate this: As long as there is only a limited number of cars on the motorway, all cars have sufficient room for their movement. If the conduction band is completely full this corresponds to traffic congestion on the motorway. The possible maximum number of cars is on the motorway, but due to lack of room these cars are immobilized.

Non–Conductors/Insulators

Here the distance between valence bond and conduction bond is so large that it is no longer possible (or hardly possible) for the electrons to change from the valence bond to the conduction bond. The thermal energy k_T which is provided by heat is not sufficient in any case.

Semi–Conductors

By and large the same as for non–conductors applies, except that the distance between valence band and conduction band is noticeably smaller, so that thermal energy (intrinsic conduction) or an external energy supply can transport electrons from the valence band to the conduction band.

FOR TRAINING PURPOSES ONLY!

© Lufthansa Technical Training

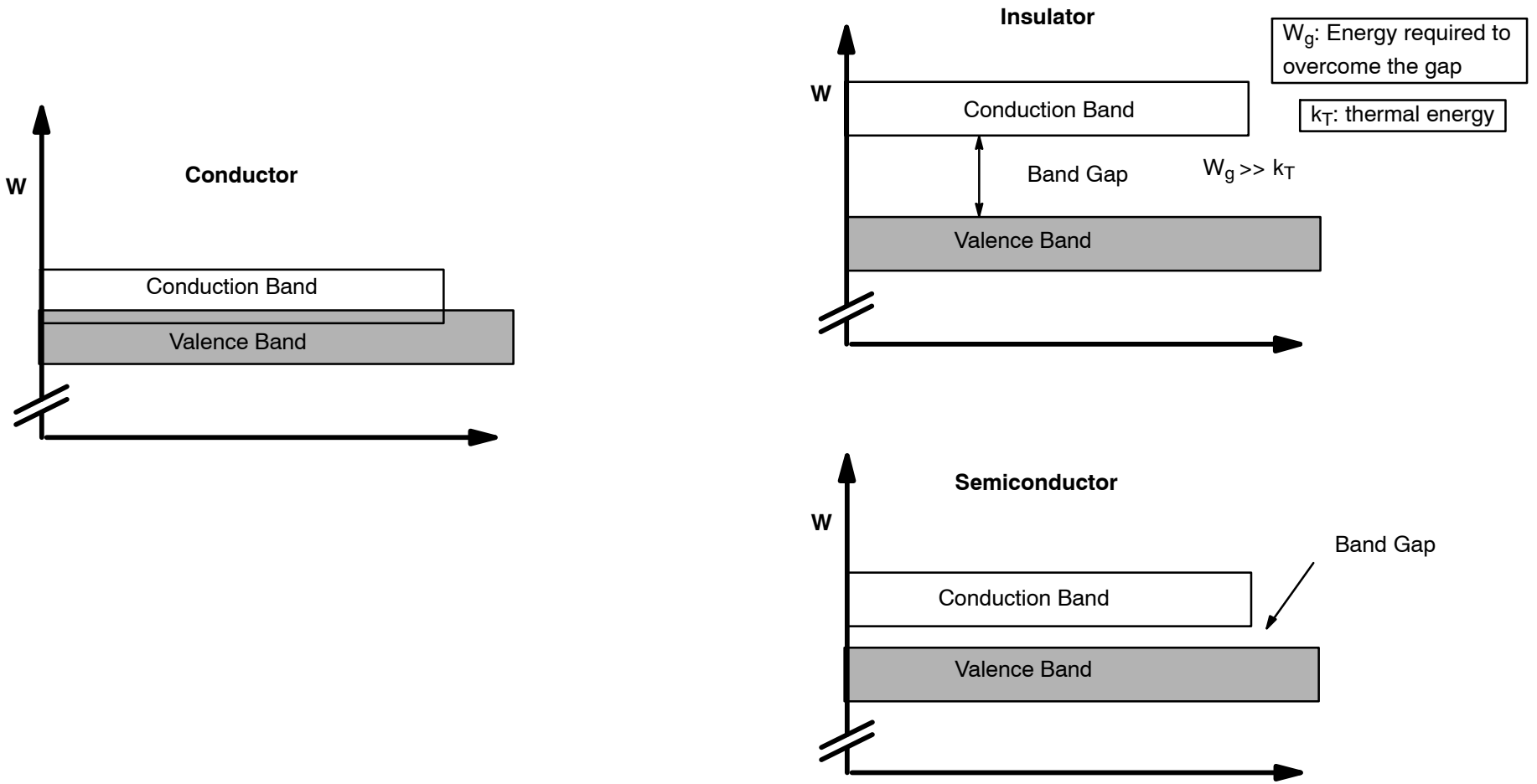

Figure 12 Valence Band and Conduction Band

FOR TRAINING PURPOSES ONLY!

© Lufthansa Technical Training

M3.2 STATIC ELECTRICITY AND CONDUCTION

CONDUCTION OF ELECTRICITY IN SOLIDS, LIQUIDS, GASES AND A VACUUM

Current Conduction

Current in Metallic Conductors

There are plenty of free electrons available in metals to conduct electricity.

These electrons flow from the negative to the positive pole when a voltage is applied. Since the entire metal is densely packed with electrons, the conductor does not require an initial charge. Every electron entering the conductor will force out another electron at the opposite end.

Velocity

Electrons move at a few millimetres per second.

Liquids as Electrical Conductors

Pure water does not conduct electricity. Water consists of hydrogen and oxygen.

However, when adding acids, bases, or salts water becomes a conductor and the solution is decomposed. The process of decomposition when passing an electric current through a liquid is called electrolysis.

The conducting liquid is called electrolyte (lyo = Greek: I solve)

The electric current splits the water into hydrogen and oxygen. If direct current is applied, two parts of hydrogen are generated at the negative pole (high development of gas) and one part of oxygen at the positive pole (low development of gas).

This chemical effect of current is not only used in electrolysis, but also in galvanizing or when charging batteries.

FOR TRAINING PURPOSES ONLY!

© Lufthansa Technical Training

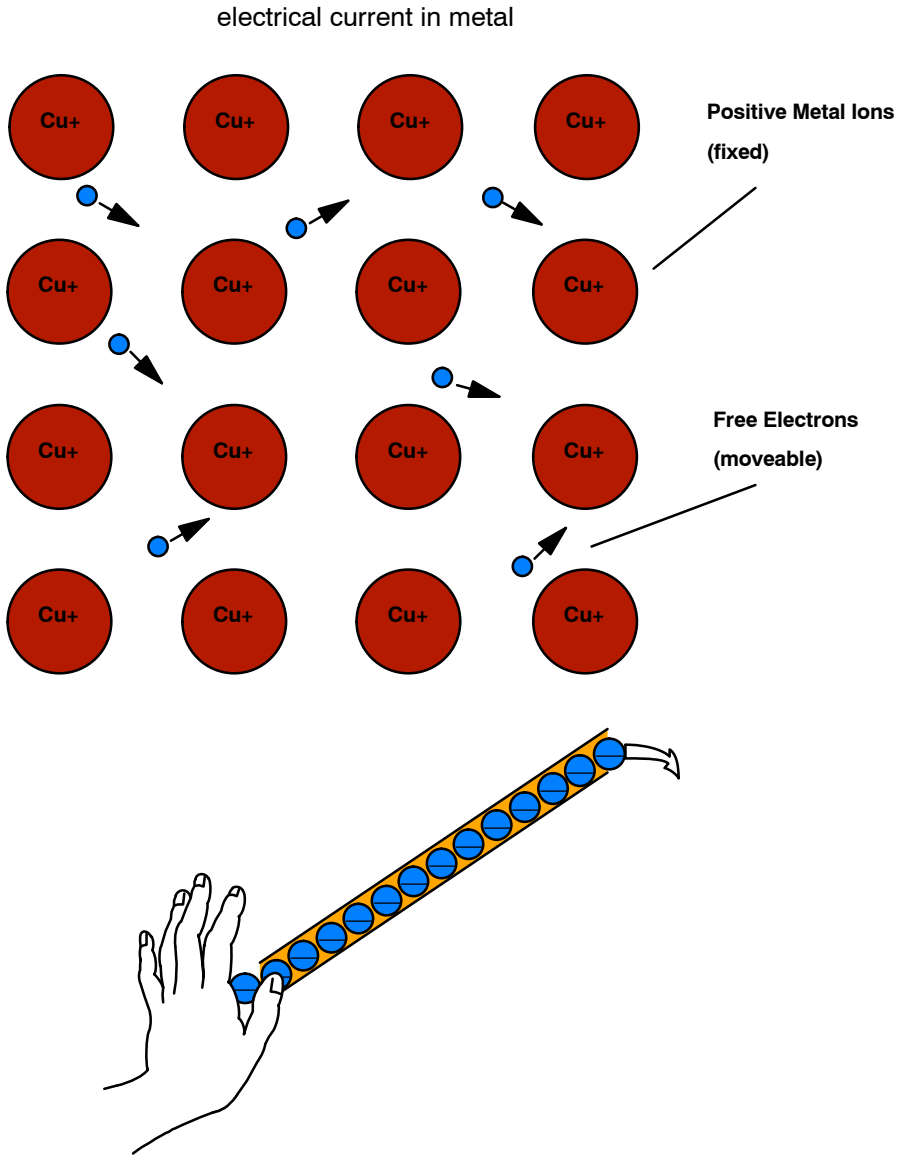

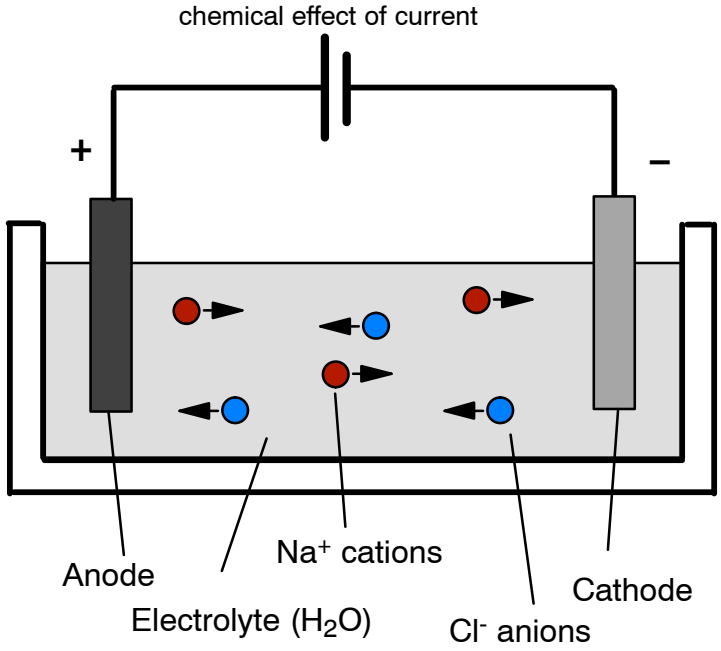

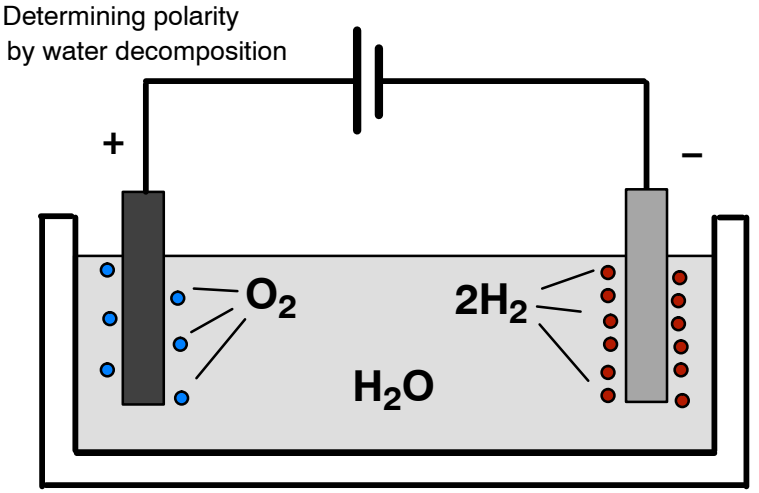

Figure 13 Current in Metals and Fluids

FOR TRAINING PURPOSES ONLY!

© Lufthansa Technical Training

Application of Gases (Ion Currents and Electron Currents)

Gases can be found in many fields of electrical engineering, for example in light bulbs with a higher electrical output (> 60 W). In order to protect the filament (tungsten) from burning, oxidizing, or vapourizing in a more effective way, the bulb is filled with nitrogen, Argon or krypton. Halogen bulbs, which have an even higher capacity, are additionally filled with halogens like iodine or bromine. These gases cause vapourized tungsten to return to the filament. Service life increases.

The electrical continuity in gases or metal vapours produces light– this process is called gas discharge. It occurs in gas discharge tubes like fluorescent lamps. Neon and Helium are used in such lamps.

A closer look at the atom model of gas is quite helpful to understand the process. According to this model gas is an accumulation of freely moving bodies, which look solid and spherical from the outside. Due to heat these molecules or atoms (in case of noble gases) move randomly without combing. Normally, the biggest part of the atoms in the bulb are electrically neutral. However, external energy (heat, light, radioactivity) causes some atoms to split off electrons. This generates freely moving charge carriers (electrons and positive gas ions). The ionization causes the current to increase in such a way that it has to be limited with a series resistor.

Consequently, the process of gas discharge is characterized by a current generated from electrons and positive ions.

Electron Current in a Vacuum

Oscillographs or oscilloscopes provide a visualization of rapidly varying processes in electrical engineering, electronics and other sciences.

With the oscillograph, rapidly varying electrical processes can be permanently recorded. Using an oscilloscope these processes can be visualized but not recorded.

The electron beam oscilloscope is mainly used today because it is easy to operate, versatile and shock–resistant.

The technology originates from an invention of K. F. Braun, a German physicist (1850 – 1918) the electron beam tube, also called the ”Braun” tube.

A simple model of such a tube is an evacuated glass bulb with a cathode (negatively charged) on one side and an anode (positively charged) on the opposite side. If the cathode is heated, electrons will be released from it and then emitted while the anode attracts and accelerates them (charge equilibrium).

The German physicist A. R. Wehnelt (1871 – 1944) developed the technology further by bundling the electrons and creating an ”electron gun”. Today the benefits can be seen in a variety of applications based on this technique e. g. a television tube.

FOR TRAINING PURPOSES ONLY!

© Lufthansa Technical Training

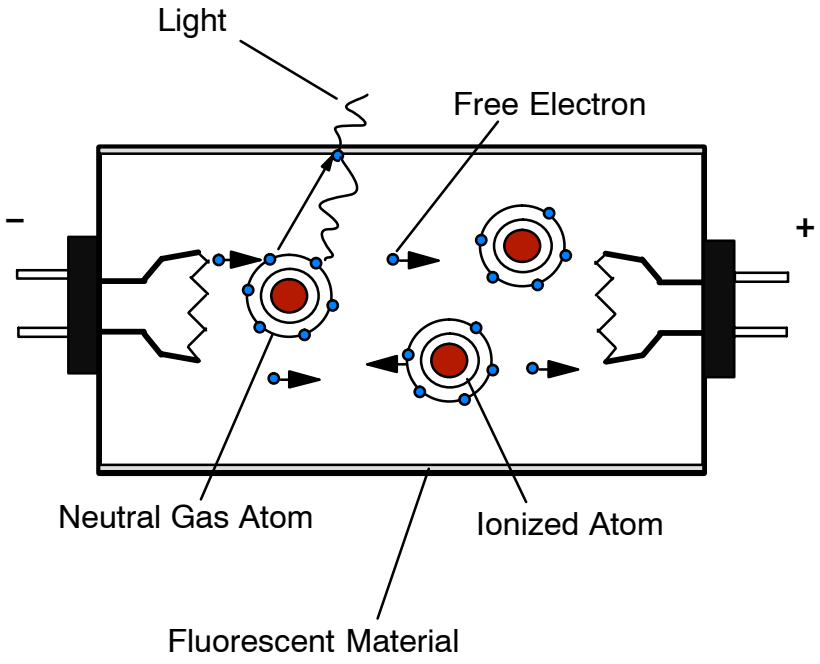

Gas Discharge Process

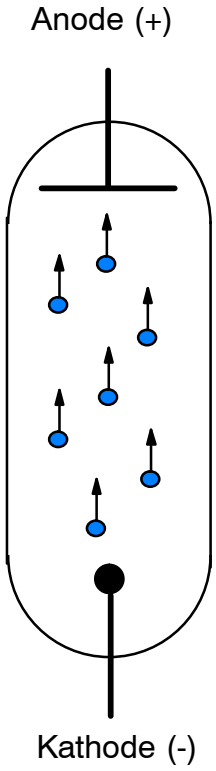



Tube

Figure 14 Current in Gases and Vacuum

FOR TRAINING PURPOSES ONLY!

© Lufthansa Technical Training

Current Density in a Wire

General

Electrical current is defined as number of electrons per second through a wire, regardless its cross–section.

Temperature Rise

Electrical current that flows through a light bulb where it heats a thin filament until it emits light but hardly warms the thicker wires of the connection. In a wire with the small cross–section, the electrons moving are closer together than in a thicker wire. Therefore, the thinner wire warms up more rapidly and intense due to the high number of collisions of the electrons in the spaces between the ions of the wire material.

Technical use

The maximum current density is used to calculate the width of conductors.

Symbol for Quantity and Unit

The electric current per mm^2 wire cross–section is called current density “J”.

The unit is $\frac{A}{mm^2}$

Formula

$$Current\ \ density\ (A/mm^2) = \frac{Current\,(A)}{Cross\ -\ section\ (mm^2)}$$

$$J = \frac{I}{A}$$

Temperature

The higher the current density, the more the conducting wire warms up.

The maximum current density for wires depends on the material they are made from (i. e. copper or aluminium), the cross–section and the ambient conditions for cooling down. In order to meet the fire regulations, the current density in wires (i. e. in coil windings, transformers and motors) must not exceed the maximum values over a certain length of time.

The temperature of wires must not exceed 60° C. Therefore, the maximum load defined per wire cross–section at an ambient temperature of 25°C must not be exceeded.

FOR TRAINING PURPOSES ONLY!

© Lufthansa Technical Training

Maximum Load of Insulated Wires

Household installations

Cross–section in mm^2	Copper Current in A
1,5	16.5
2.5	23
4	30
6	38
10	52
16	69

Aircraft installations

70°C ambient temperature, wires in bundles, groups or harness, rated 105°C

AWG	Cross–section in mm^2	Copper wire Current in A	Aluminium Current in A
22	0.33	3	–
20	0.59	4	–
18	0.93	6	–
16	1.34	7	–
8	8.31	38	30
6	14.2	50	40
4	21.3	68	54

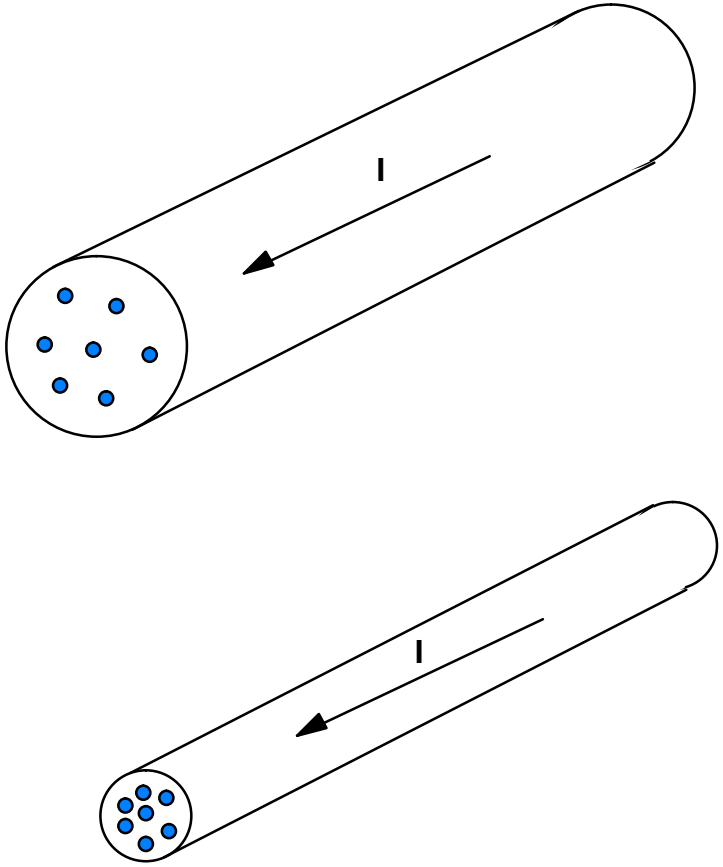

Figure 15 Current Density

FOR TRAINING PURPOSES ONLY!

© Lufthansa Technical Training

M3.3 ELECTRICAL TERMINOLOGY

ELECTRICAL TERMS, THEIR UNITS AND FACTORS AFFECTING THEM

Voltage

Electromotive Force

In order to make electrons move a force needs to act upon them.

This force is called electromotive force (EMF).

Voltage

The reason for such a force is voltage. In this case forces existing between electrical charges are utilized. Electrons are attracted by positive charges and repulsed by negative ones.

Voltage is generated by the separation of charges.

This will create a positive and a negative pole. The electrons are repelled by the negative pole and attracted by the positive pole.

The greater the separation of charges, the higher the voltage.

Potential Difference

Consequently, voltage can be described as the difference in energy between electrical charges. This difference is also called potential difference.

Symbol for Quantity and Unit

The symbol for voltage is U.

(In some countries, however, the symbol for voltage is V)

The unit of voltage is V (volt).

Measuring Voltage

A voltmeter is connected in parallel with the terminals of a source or load. Make sure that the selected measuring range of the voltmeter is sufficient. If the selected measuring range is too small, the voltmeter may eventually be overloaded or damaged.

There are analogue meters with a pointer and digital meters with a numerical indication. Such devices have a very high internal resistance.

1V = 1000 mV

1 mV = 0.001 V

1 kV = 1000 V

Common Voltages

Radio aerial	0.1 uV ... 5 mV
Telephone	1 mV ... 800 mV
Single cell battery	1.5 V
Mains voltage	230 V ... 400 V
Power line	6 kV ... 380 kV
Lightning	several MV

Hazard

Lowest voltage hazardous to human beings is 50 V AC or 120 V DC

Kinds of Voltage

We derive between two kinds of Voltage:

- Direct Voltage, causing DC
- Alternating Voltage, causing AC.

FOR TRAINING PURPOSES ONLY!

© Lufthansa Technical Training

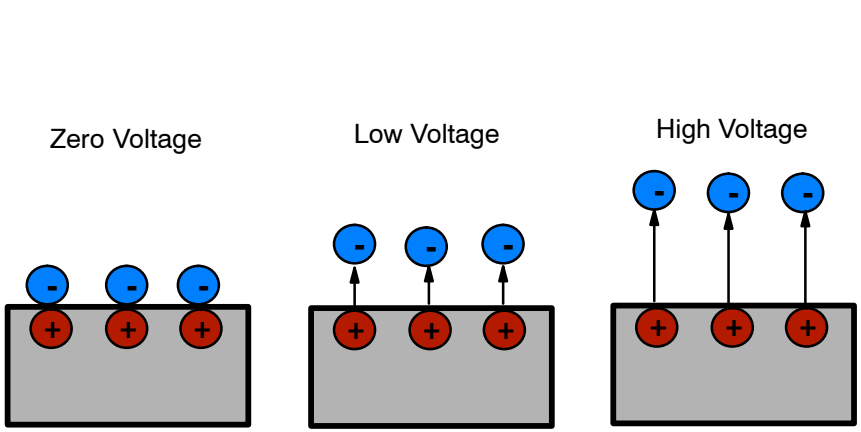

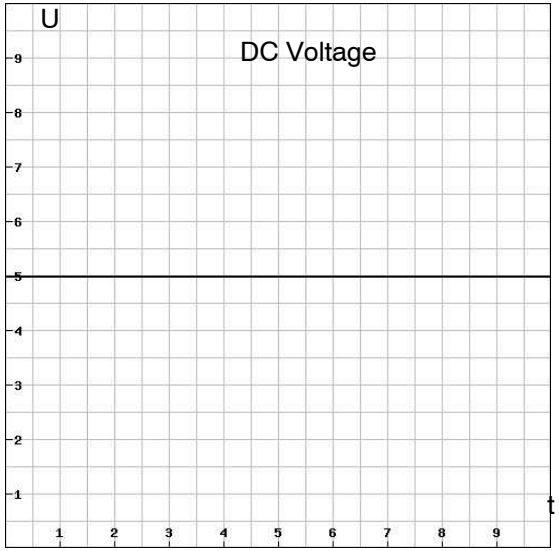

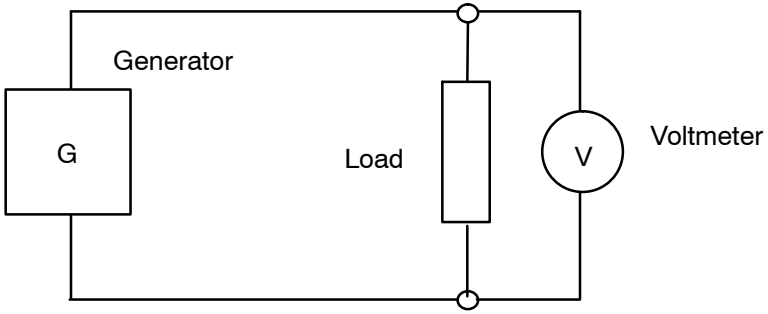

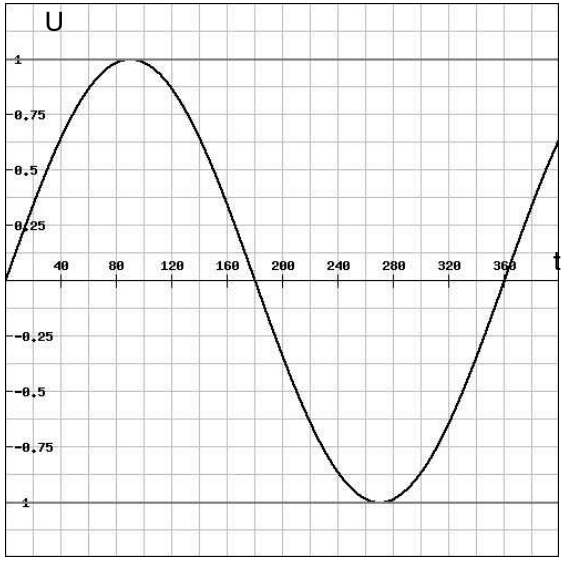

Figure 16 Voltage Levels and Kinds of Voltage

FOR TRAINING PURPOSES ONLY!

© Lufthansa Technical Training

Conventional Current Flow and Electron Flow

General

Electrons are negatively charged. They act as current−carriers in solid bodies.

Electron Flow

Electrons flow from the negative pole of a power source to the positive pole. This process is designated as the physical current flow or electron flow.

Technical Current Flow

In the 19th century the flow direction of positive ions was defined as the direction of current. The precise details, however, were yet unknown. Therefore, electric current was determined to flow from the positive to the negative pole. This model is called positive conventional flow or technical current flow.

Technical current flow is the direction of flow of positive charges.

Mobile positive charges occur in liquids and gases.

Only negative charges (electrons) move in metals. For that reason, electron flow is opposite to technical current flow. The flow direction of electrons from the negative pole to the positive pole is called electron flow.

The flow direction (or direction of current) normally refers to the technical current flow.

General Rule

General rule is: electric current flows from the positive to the negative pole.

Voltage just like current is always indicated from the positive to the negative pole.

Loads

The voltage inside a load is indicated from the positive to the negative pole and the current flows from the positive to the negative pole.

Direct Current

The direction of the electrons flowing through a conductor depends on the polarity of the applied voltage. If this polarity is not changed, the electrons always travel in the same direction through the circuit.

Thus, the current flows constantly in one direction and is called DC.

By reversing the power supply, i. e. if it is connected the other way around, the electrons in the conductor immediately change direction.

Alternating Current

If the polarity reversal of the power supply occurs periodically, i. e. at equal intervals, the electrons periodically change flow direction, that means the electrons reciprocate.

A current which periodically changes its flow direction is designated as AC.

FOR TRAINING PURPOSES ONLY!

© Lufthansa Technical Training

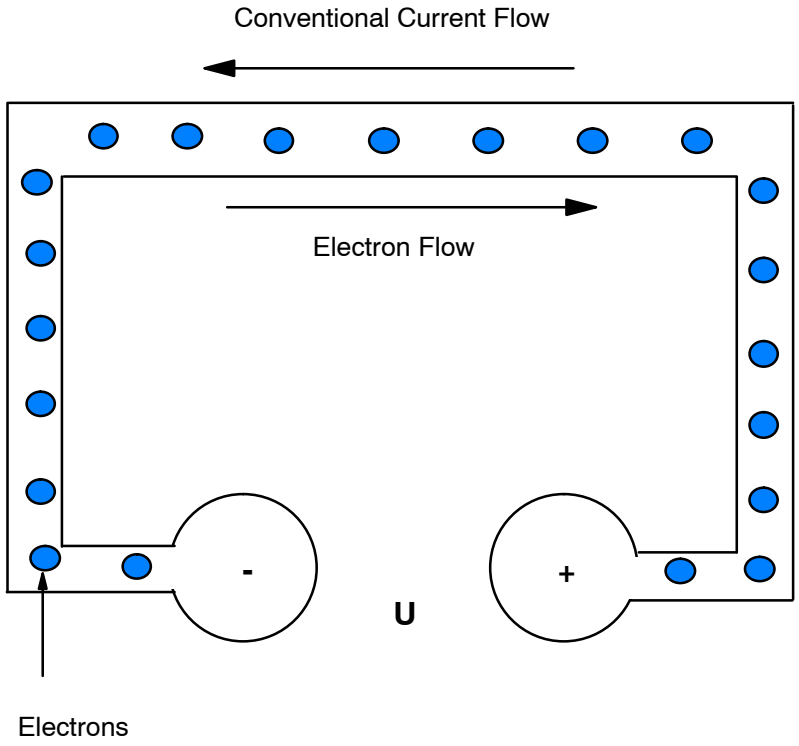

Electron Flow and Conventional Current Flow

Figure 17 Direction of Voltage and Current

FOR TRAINING PURPOSES ONLY!

© Lufthansa Technical Training

M3.4 GENERATION OF ELECTRICITY

PRODUCTION OF ELECTRICITY BY THE FOLLOWING METHODS:

Friction

History

Voltage generation by friction is the oldest way humans did create voltages.

It is said that even B. C. the Greeks did rub amber with a woolen cloth or leather clothes. They did spot out a force being exerted between the amber and other objects.

This Effect is called triboelectric effect.

Practice

If an insulator is rubbed, electrical charges are separated and voltage is generated (Static electricity).

The voltages can reach high values up to the **kV range**, which is normally not intended.

This can be seen in the forces actions, e. g. regarding charged plastic films that attract each other and the forcible balancing movement of charges. Examples are the movement of charges between electrostatically charged humans and door handles (Spark, shock) and between electronic components (destruction).

Protection of Electronic Devices

Staff working with such electronic components usually wear a bonding braid around the wrist, which is connected to earth.

Unintended Electricity by Friction

Unintended static electricity is generated when dealing with paper, plastics, foils, tables, plastic chairs, vinyl floors, fabrics made of chemical fibres, vehicles, combs, and aircraft. Static electricity also occurs when insulating liquids and gases flow.

These electrostatic occurrences are experienced in everyday life.

Static Electricity

Static electricity can be produced by contact, friction or influence.

With high voltages a sudden discharge may occur resulting in arcing and sparking, especially if the ambient humidity is high.

Definition of Static Electricity

Static electricity usually means generation of high voltages by friction but no current will flow.

Example

As an example, a glass rod that is rubbed with rabbit fur becomes negatively charged, but if rubbed with silk, becomes positively charged.

If the glass rod is rubbed with silk it will give off electrons becoming positively charged. It can be used to charge other objects.

Physical Background

When two materials are rubbed together, some electrons of one of the materials are handed over to the other material. The electrons transferred are those in the outer layer. They are called free electrons or valence electrons.

FOR TRAINING PURPOSES ONLY!

© Lufthansa Technical Training

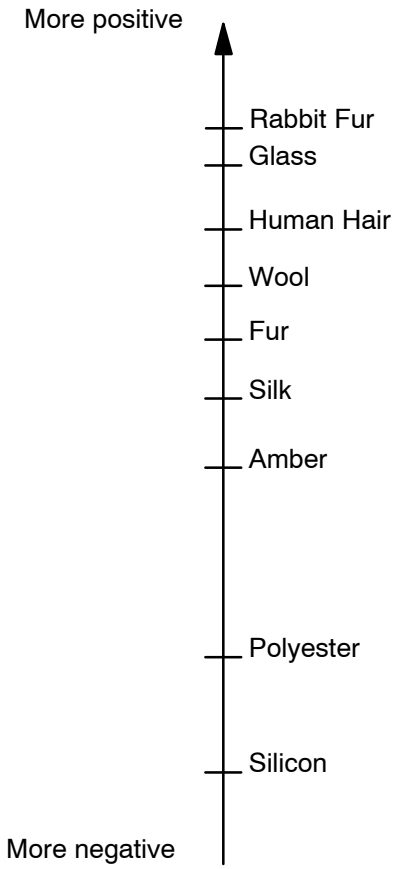

Figure 18 Triboelectric Series

FOR TRAINING PURPOSES ONLY!

© Lufthansa Technical Training

Influence

Charging of Objects by Touching

When a glass rod is rubbed with silk, the glass rod gives up electrons and becomes positively charged. The source of this charge is friction. The charged glass rod may be used to charge other substances.

For example, if an uncharged metal bar is used as shown below, some of the rod's charge can be transferred to the bar by touching it with the rod. The bar is charged by contact.

Charging of Objects by Influence

The method of charging a metal bar by influence is shown below.

A positively charged rod is brought near the metal bar without touching it. The electrons of the metal bar are attracted towards the charged rod. Thus, one end of the bar is charged positively, the other end is charged negatively. The distribution of charges is not the same in the bar. When touching the bar with a finger as shown, electrons are drawn off the finger and into the bar.

After removing the finger from the bar and then removing the rod, the bar is charged negatively due to the excess of electrons. The bar is charged by induction.

FOR TRAINING PURPOSES ONLY!

© Lufthansa Technical Training

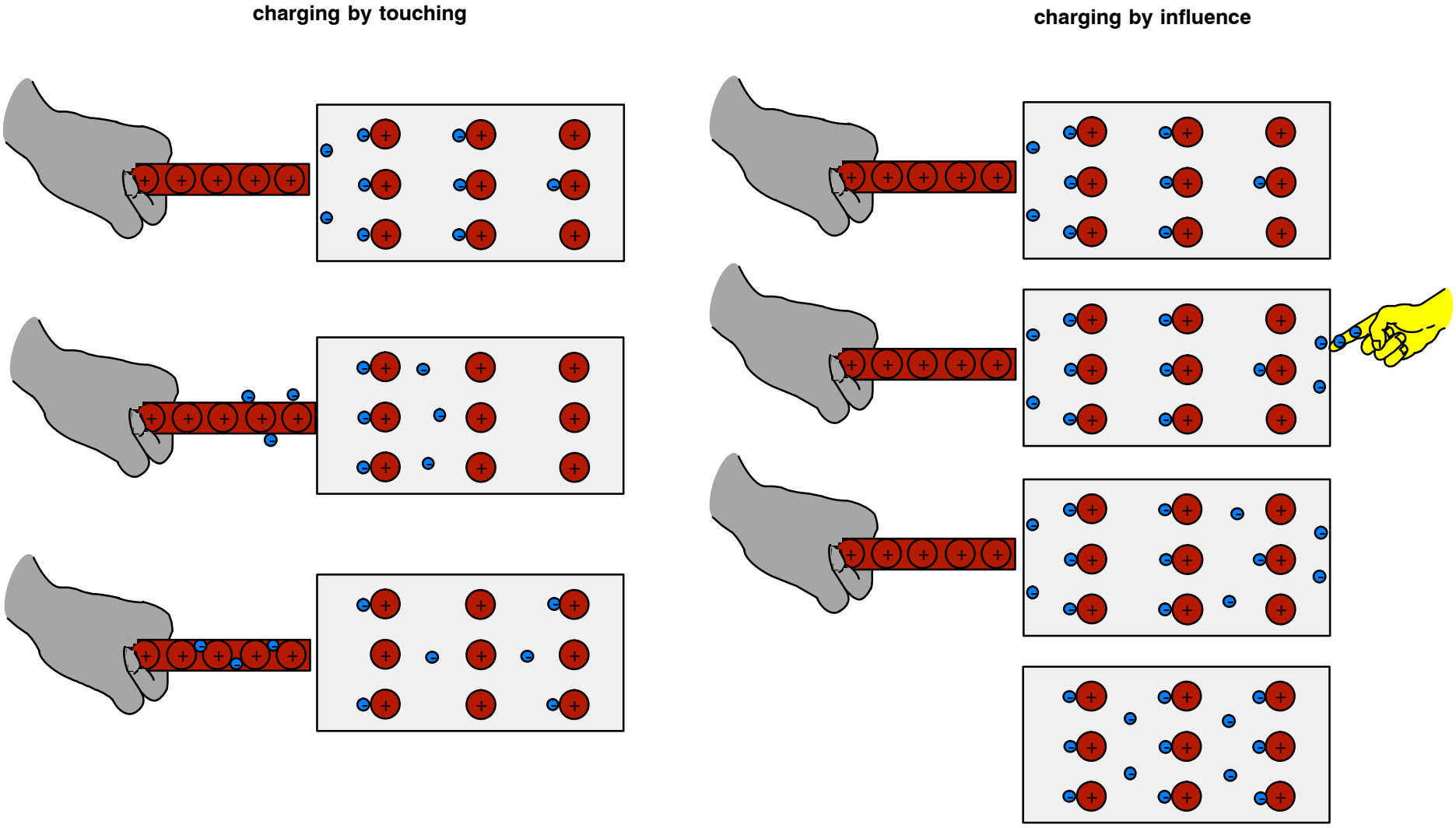

Figure 19 Electrostatic Charging

FOR TRAINING PURPOSES ONLY!

© Lufthansa Technical Training

Pressure

Piezo Crystal

If a so called Piezo crystal is deformed by using pressure, a voltage is generated. This is referred to as the Piezoelectric effect: with certain crystals negative or positive charges and therefore voltages are generated, if pressure or tension loads are exerted on the crystal surfaces.

The physical background is the enforced shifting of charges in the crystal.

The charges are tapped using aluminium foil for example.

Application

The Piezoelectric effect is applied in crystal pick ups of record players, in crystal microphones, crystal loudspeakers, lighters, gas lighters, pressure gauges and dynamo meters.

FOR TRAINING PURPOSES ONLY!

© Lufthansa Technical Training

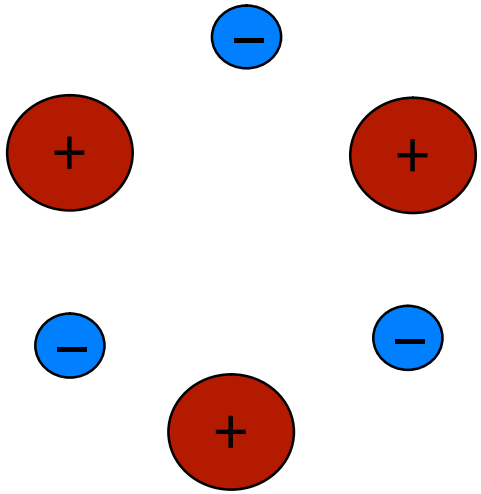

Normal symmetric Arrangement

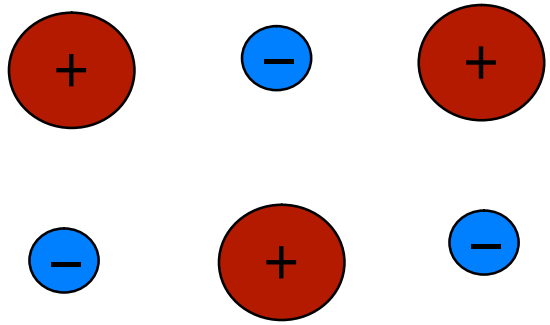

Arrangement under Compression

Figure 20 Construction of Piezo Crystals

FOR TRAINING PURPOSES ONLY!

© Lufthansa Technical Training

Heat

General

In a metal the valence electrons are in a near to free state. They are not bound to an atom any more, but the crystal structure of the metal is riddled with the valence electrons like a gas. As equal charges repel, the electrons tend to spread evenly in the available space.

This tendency to diffuse is the cause for the generation of contact voltages. However, the electron gas is locked up in the metal like in a container. Despite the mutual repulsion of the electrons, i. e. the tendency to diffuse, the electron gas cannot easily escape from the metal. For an electron to leave the metallic bonding or to be removed, a force has to act. This force cancels the electrical attracting force (nucleus, electrons). In order to move an electron away from the metal, work is required. This energy is referred to as work function and is stored as potential energy by the electron. The work function is measured in electron volts (eV).

The force required to separate, which is stored by the electron as potential energy during its escape from the metal surface, is referred to as electric potential. The voltage grows with the potential.

Voltages produced by heat are always DC voltages.

Electron Emission

The separation of electrons from a metal bonding is referred to as electron emission. The term ”emission” derives from the Latin word emittere (~ emit).

Heating is one method to emit electrons. This form of emission is referred to as thermionic emission. The heating causes the emission and the emission causes the voltage generation. Thus the voltage depends on the degree of heating, i. e. on the temperature.

Application

Voltage generation by heat is used for measuring the exhaust gas temperature (EGT) of an aircraft turbine engine.

FOR TRAINING PURPOSES ONLY!

© Lufthansa Technical Training

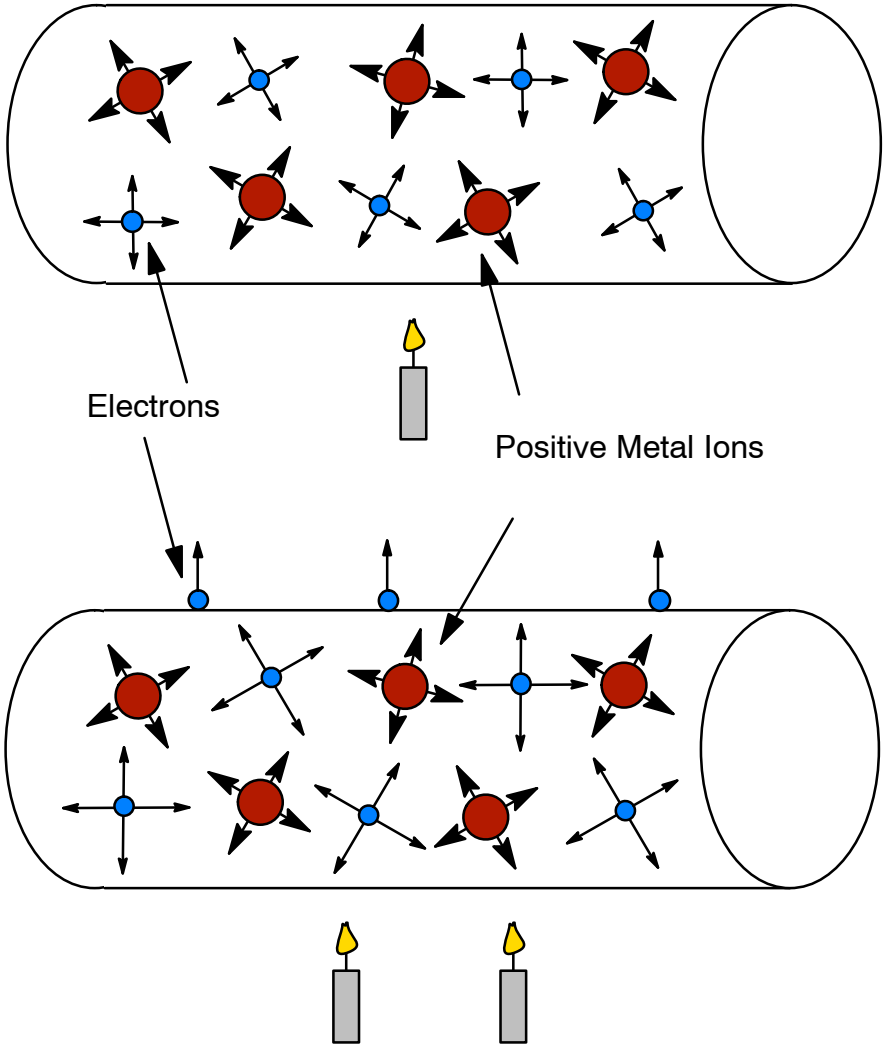

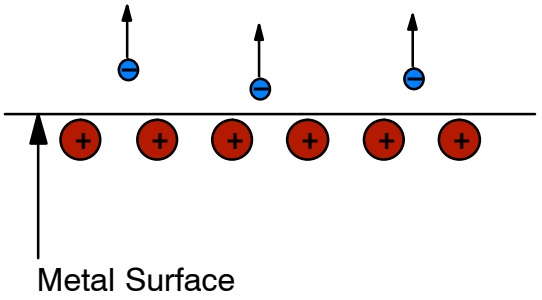

Figure 21 Voltage Generation by Heat

FOR TRAINING PURPOSES ONLY!

© Lufthansa Technical Training

M3.5 DC SOURCES OF ELECTRICITY

Thermocouple

Design and Principle of Operation

As you already know, if heat is applied to metals, their temperatures increase, the vibration of the atoms in the metal lattice increase and the proper motion of the electrons increase, too. The electrons in a heated metal behave in the same way as the particles in a gas, moving faster and faster when heated. At a certain temperature the electrons can move away from the metal.

Increasing the temperature can even accelerate this process.

Different metals have different numbers of free electrons and therefore a different electron density. If metals with different electron densities are connected, the electrons can pass from the metal with the higher density into the metal with the lower density, if they are given the required energy. This energy can be heat.

Two different metals (e. g. copper and iron) are connected at one end, by soldering for example. If their junction is then heated, you notice that a voltage is generated between the two free ends. This voltage is referred to as thermoelectric voltage. This kind of power supply is referred to as a thermocouple.

The thermoelectric voltage depends on the temperature difference between the junction and the two free ends as well as on the combination of metals:

Chromel	–	Alumel	4.2 mV per 100° C
Bismuth	–	Antimony	10.0 mV per 100° C
Constantan	–	Copper	4.2 mV per 100° C
Platinum	–	Platinum-Rhodium	1.0 mV per 100° C

Application

Thermocouples are used to measure temperatures (temperature range from –200° C to 2300° C) e. g. for remote measurements of temperatures at hard to reach places, e. g. ovens and windings.

Even very high temperatures can be measured.

Application in Aviation

In aviation, thermocouples are mainly used to measure exhaust gas temperatures of engines. For modern engines the metals chromel and alumel are used.

The Temperature of exhaust gases is called Exhaust Gas Temperature (EGT).

The part of the circuit with the thermocouple is called “hot junction“. The part in the indicator is called “cold junction“.

When analogue technology is used, the cold junction is the EGT indicator.

The generated voltage depends on the temperature difference between hot junction and cold junction, but the temperature in the cockpit is not constant. This is compensated by a bi-metal spring inside the EGT indicator.

Balancing Resistor

In a multi-engine aircraft, the wire length from an engine to the related EGT indicator is not the same for all engines. For to compensate the different length with the resulting different resistance, a variable resistor is installed which must be calibrated. This resistor is called “Balancing Resistor“.

Junction Box

Normally, some thermocouples are connected in parallel in a housing which is called “junction box“.

Fire Seal

The engine is separated from the aircraft body ba a fire seal. near the fire seal there are many electrical connectors.

Wiring

When analogue technology is used, the current through the EGT indicator would cause a loss of voltage because the wires are long. For this reason, a different material is used for the wires:

- copper for the positive wire
- constantan for the negative wire.

FOR TRAINING PURPOSES ONLY!

© Lufthansa Technical Training



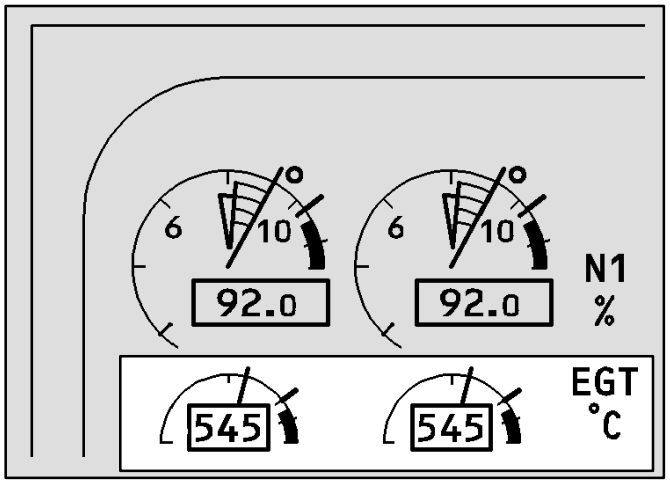

EGT Indication with Electronic Instrument System

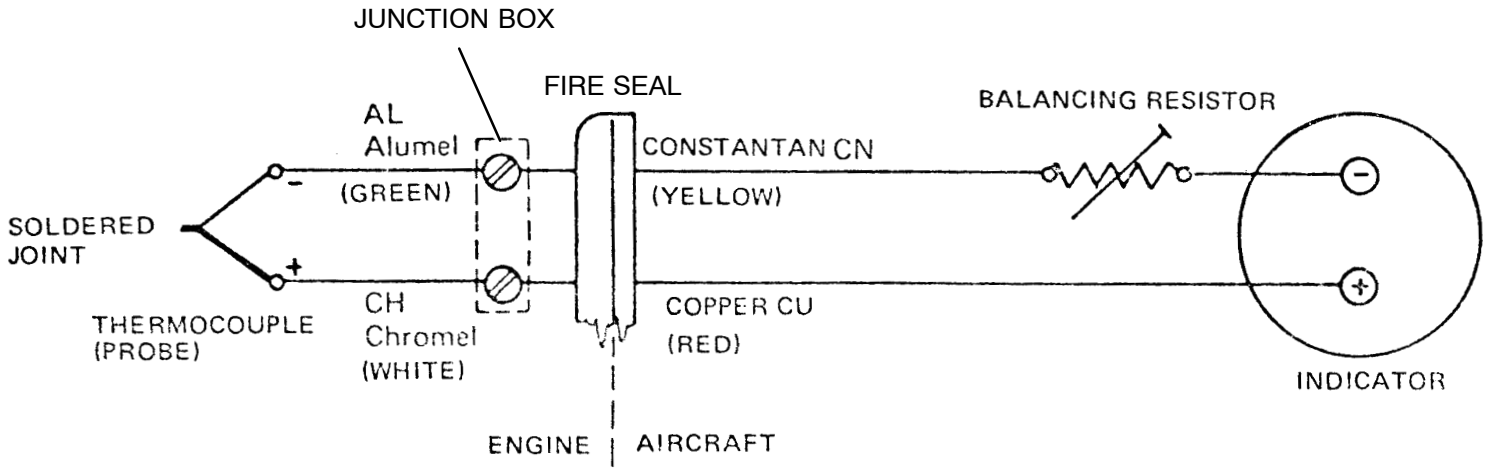



Figure 22 Thermocouple

FOR TRAINING PURPOSES ONLY!

© Lufthansa Technical Training

M3.4 GENERATION OF ELECTRICITY

Light

General

If light impinges upon certain semiconductor materials like silicon or germanium, the result is a charge separation.

Energy input increases the intrinsic conductivity of high−purity semiconductor materials.

Light irradiation means energy input. It can be imagined that the light particles, the so called photons, break up the crystal bonding.

Thus the bound charge carriers become free charge carriers. The number of released charge carriers during a certain period of time increases with the luminance.

If light particles enter the depletion layer of a semiconductor junction, charge carriers are released, and crystal bonding break up. Thus the released charge carriers are moved away from the depletion layer by the forces of the electric field. Hence a current flows.

These opto-electronic components are called photocells.

Purpose

Photocells function as generators of electrical voltage. They are energy converters.

FOR TRAINING PURPOSES ONLY!

© Lufthansa Technical Training

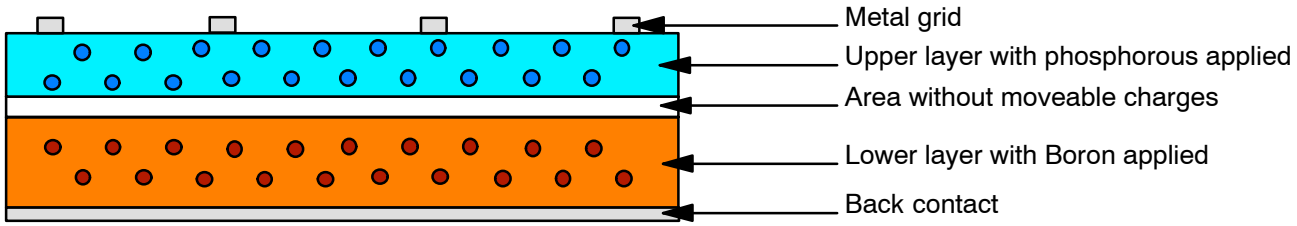

Figure 23 Construction of Solar Cells

FOR TRAINING PURPOSES ONLY!

© Lufthansa Technical Training

M3.5 DC SOURCES OF ELECTRICITY

OPERATION OF PHOTO-CELLS

General

If a photocell is exposed to light, then voltage is generated.

Physical Background

If light impinges upon certain semiconductor materials like silicon or germanium, the result is a charge separation. The intrinsic conductivity of a semiconductor material depends on how much crystal bonding is broken up in a certain period of time. During the breaking up of the crystal bonding an electron and a ”hole” are released. The primary cause of breaking up of the crystal bonding is the vibrations of the atoms, caused by the energy supplied by heat.

The color of the light also has a certain influence. The energy of the light particles depends on the color of the light, i. e. on the wavelength of the light.

Construction

A photocell (depletion layer photocell) consists of a lower layer with Boron atoms applied, that is attached to a layer with phosphorous applied. A thin translucent metal grid is vaporized onto this layer as a counter electrode.

Operation

A depletion area (no moveable charges) arises between both the layers. Exposing to light releases electrons from the lower layer, which then flow to the upper layer. Thus the lower layer is positively charged and the upper layer negatively charged, hence a voltage is generated.

The voltage depends on the light intensity, the kind of light and the depletion layer type.

Power

When exposed to sunlight, solar cells can produces a voltage of approx. 0.6 V and a power of approximately 10 mW per cm^2 of active area.

Application

Silicon and Selenium–photocells are common; nowadays particularly silicon photocells with large surface areas have become increasingly important. These are used as solar cells.

Photocells are used in exposure meters, alarm systems, counters and also in solar cells for the direct supply of gadgets with low power consumption, like pocket calculators etc.

Solar Panels

By using small solar panels in gadgets, mains–independent energy storage and power supply is achieved. Solar panels are solar cells combined with a secondary cell.

FOR TRAINING PURPOSES ONLY!

© Lufthansa Technical Training

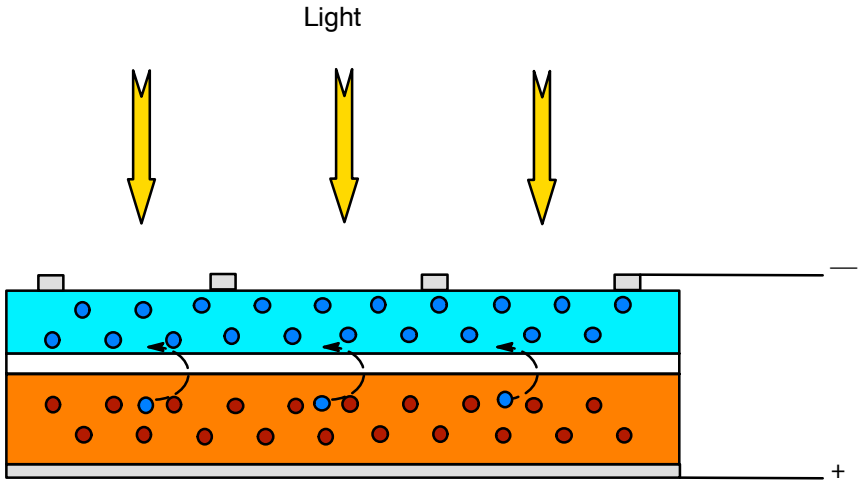

Figure 24 Operation of a Photo Cell

FOR TRAINING PURPOSES ONLY!

© Lufthansa Technical Training

M3.4 GENERATION OF ELECTRICITY

Chemical Reaction

General

The generation of electrical voltage is based on the separation and the moving of charge. Thus a difference in charge between two points occurs, i. e. a potential difference.

If two different pieces of metal (e. g. copper and zinc) are immersed into an electrically conducting liquid (e. g. water with added sulphuric acid), a voltage between the two electrodes (metals) is generated.

Certain metals like zinc tend to force positive metal ions into the solution. As a result the metals are negatively charged. Other metals like copper tend to extract positive metal ions from the solution. Compared to the solution, the metals are positively charged.

Thus there is a charge difference between the two metals, i. e. a voltage.

Galvanic Cell

Voltage generators based on these chemical principles are referred to as galvanic cells (primary and secondary cells).

Primary cells are batteries.

Secondary cells can be recharged when empty.

Voltage Generation by Electrochemical Series

Electrochemical reactions can cause electrical voltage. A galvanic cell consists of an electrolyte and electrodes made of two differently conducting materials. An electrical voltage occurs between a metal and an electrolyte. The electrical voltage of different substances was measured. A common electrode is used as a second electrode and thus the series is obtained.

The greater the distance between both substances of the galvanic cell in the series, the higher the voltage between them in an electrolyte. The voltage depends on the material of the electrodes and on the type and concentration of the electrolyte. The polarity of the electrodes is determined by the electro-chemical series.

In each combination the metal with the higher negative voltage is consumed, because it dissolves.

FOR TRAINING PURPOSES ONLY!

© Lufthansa Technical Training

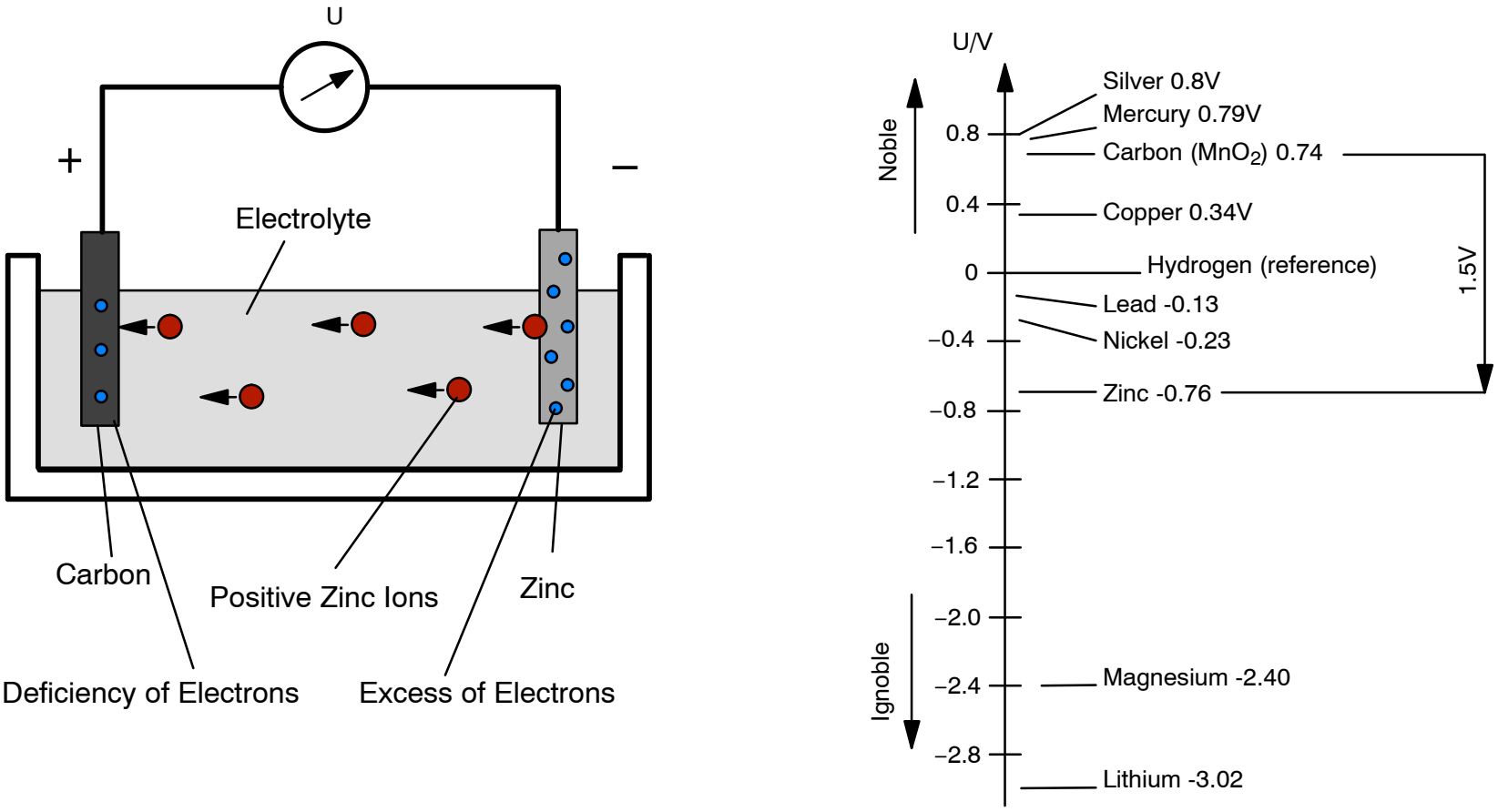

Figure 25 Electrochemical Series

FOR TRAINING PURPOSES ONLY!

© Lufthansa Technical Training

M3.5 DC SOURCES OF ELECTRICITY

CONSTRUCTION AND BASIC CHEMICAL ACTION OF:

Galvanic Cells

General

As you already know, in the electrolytes the ions are the carriers of electricity. Two different materials in an electrolyte give a power supply a so−called galvanic cell.

According to their mode of operation, galvanic elements are subdivided into primary cells and secondary cells.

Primary Cells

General

Primary cells can immediately supply voltage, without charging them beforehand; the electrochemical processes taking place are not reversible.

Batteries consist of two different materials and an electrolyte, usually an acid.

Zinc-Carbon is the most common material combination of batteries.

Primary cells cannot be charged and therefore cannot be reused.

Capacity

Galvanic cells can only supply a certain current, i. e. a certain charge, over a certain period of time; their capacity depends on the system and the size.

Capacity is the quantity of electricity (charge Q in Ampere−hours Ah)

FOR TRAINING PURPOSES ONLY!

© Lufthansa Technical Training

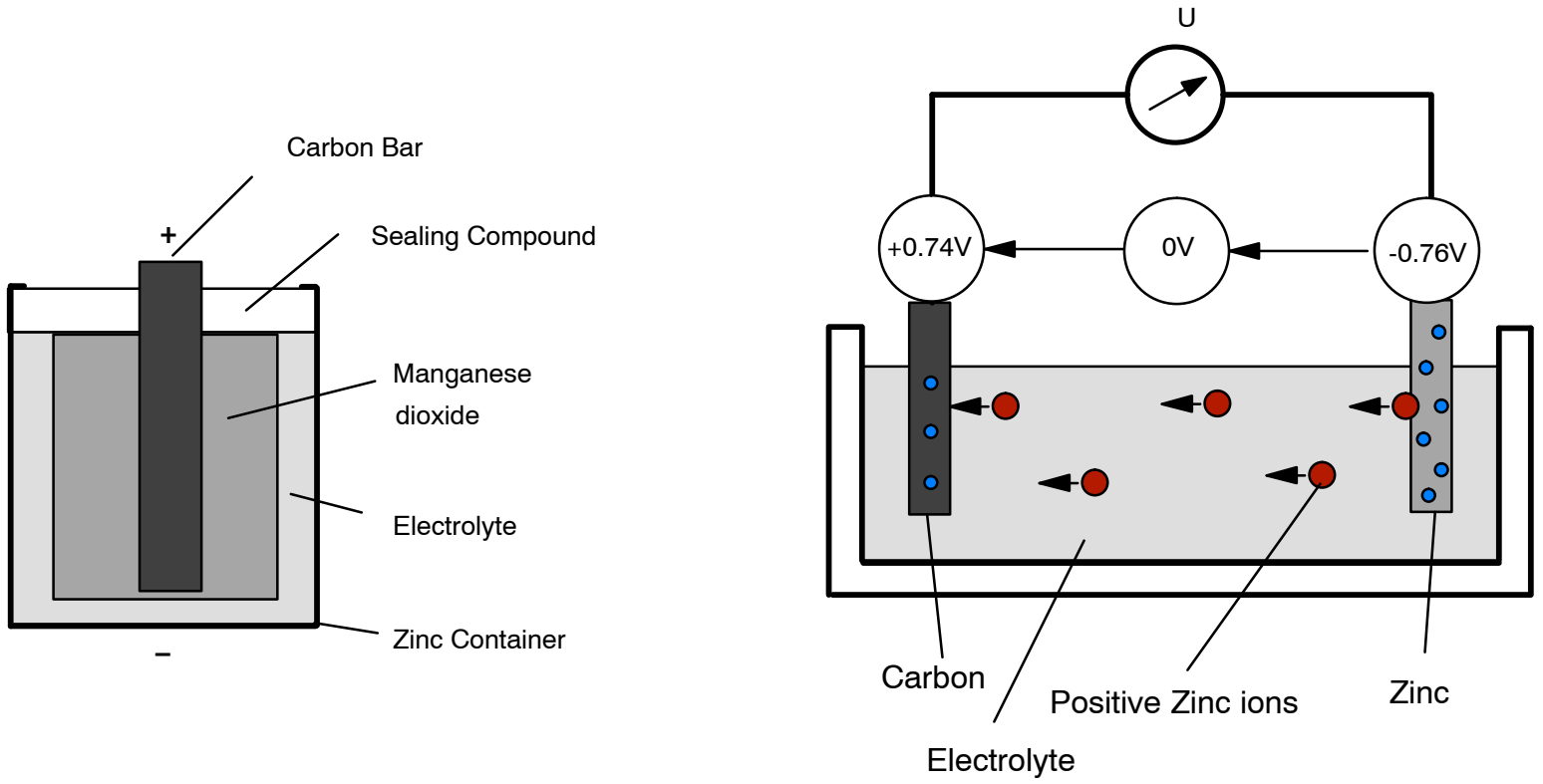

Figure 26 Zinc-Carbon Battery

FOR TRAINING PURPOSES ONLY!

© Lufthansa Technical Training

Secondary Cells

General

As these kinds of power supplies have to be charged before they supply current, they are secondary cells. In secondary cells (batteries) the electrochemical processes are reversible, i. e. the secondary cells can be recharged by supplying electrical energy and thus can be reused.

Secondary cells are power supplies that can be recharged. They are used in cars, aircraft, laptops and many other devices.

LEAD BATTERIES

General

Lead batteries are secondary cells and can be repeatedly recharged. The lead battery must only be charged using DC. For this purpose the terminals of the battery are connected to the like terminals of the charger, i. e. positive to positive and negative to negative.

Electrical energy in the form of chemical energy is stored and released again during operation.

Rated Voltage

The rated voltage of a lead battery cell is 2 V.

Capacity

The capacity of a lead battery is the charge that it can supply until it reaches the cell voltage of 1.83 V (final discharge voltage). Its unit is Ampere hours (Ah).

A battery with a capacity of 50 Ah, for example, supplies a current of 5A for 10 hours. The capacity rating refers to a particular discharging length, which is e. g. 20 hours for car batteries. If the discharging is done in a shorter time period and with higher current, the amount of current that can then be tapped is smaller than the specified capacity rating. The reason for this is that here the chemical conversion of the plates only takes place at the surface and not inside.

Construction

To increase the capacity, each cell consists of several positive charged plates and negative charged plates that are connected by a bridge.

In practice grid−shaped lead electrodes are used instead of conventional lead plates. Porous lead or lead dioxide is pressed into these electrodes. The active substance is the grey lead or the brown lead dioxide. The electrolyte used is sulphuric acid diluted with distilled water. The electrolyte has an acid density of 1.28 g/cm^3 when it is charged and 1.18 g/cm^3 when it is discharged. The plates are placed in a plastic container.

Today batteries are stored dry and only filled with the electrolyte when they are actually sold. Alternatively, maintenance−free batteries are used.

FOR TRAINING PURPOSES ONLY!

© Lufthansa Technical Training

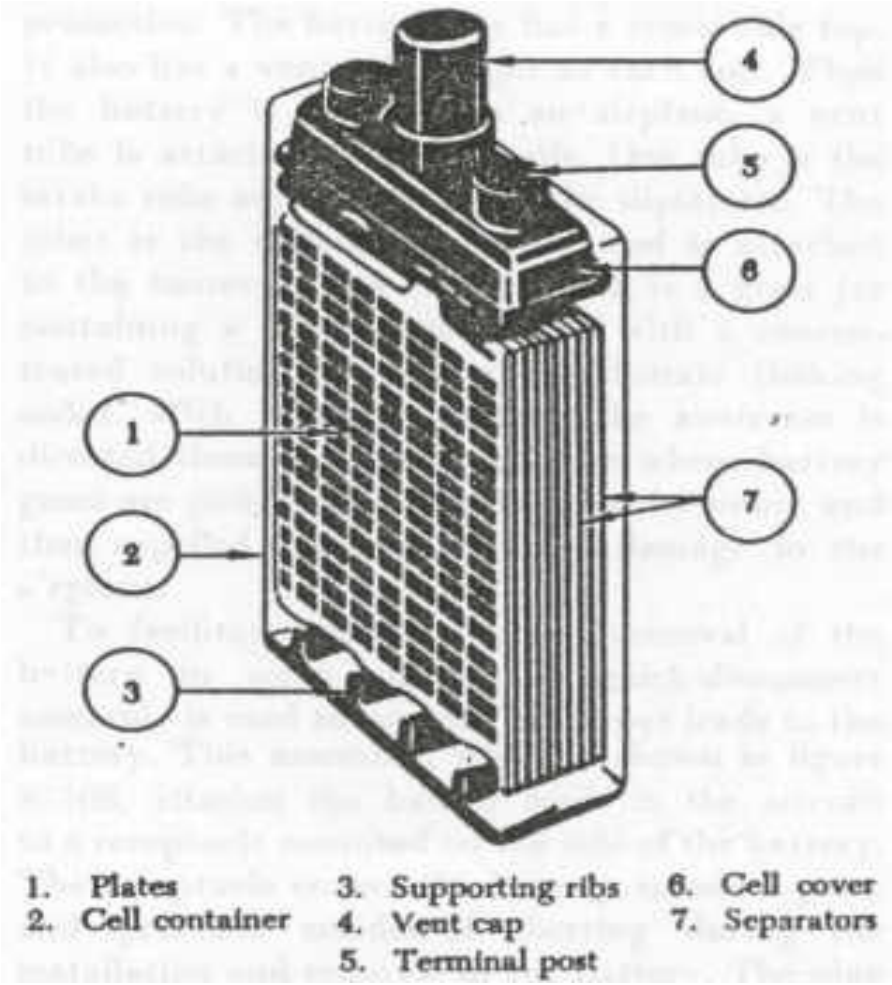

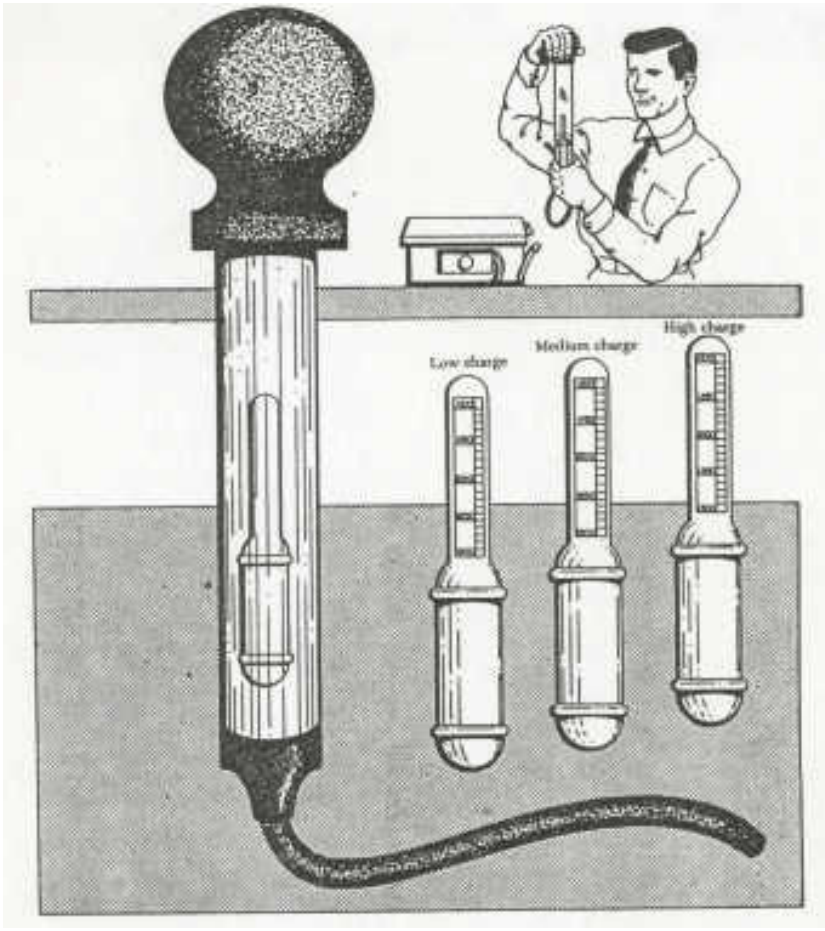

Figure 27 Lead Battery

FOR TRAINING PURPOSES ONLY!

© Lufthansa Technical Training

NICKEL–CADMIUM–BATTERIES

General

Aircraft batteries are commonly Nickel-Cadmium types.

Construction

The electrodes (plates) of the NiCd–battery consist of a nickel–plated steel sheet; the accumulator box consists of steel sheet or plastic. The positive pole plates, which are made of fine punched nickel–plated steel tubes, contain a filling. This filling is a nickel compound with finely spread nickel or graphite powder. The minus poled plates are similarly built and filled with a cadmium compound.

The electrolyte is lime potash that is diluted with chemically pure water. The density of the base is nearly independent from the charge condition, because during operation only the level of the acid of the electrolyte changes. During charging the gauge rises, during discharging it falls.

Rated Voltage

The rated voltage of the NiCd–battery is 1.2 V and may fall to 1 V during discharging.

Warning

The nickel cadmium battery may only be refilled when it is charged, otherwise there is a hazard of explosion!

Comparison of NiCd–batteries with lead batteries

The NiCd–battery has a better mechanical resistance, has a longer life and is less sensitive to short circuits and to excessive discharging. It has twice the density of energy, therefore it is smaller and weights less. Moreover its voltage is very constant. It can be left discharged for a longer period of time without being damaged. There are no unpleasant acid gases as there are in the lead battery.

Disadvantages of the NiCd–battery are the low cell voltage and the comparable high price.

FOR TRAINING PURPOSES ONLY!

© Lufthansa Technical Training

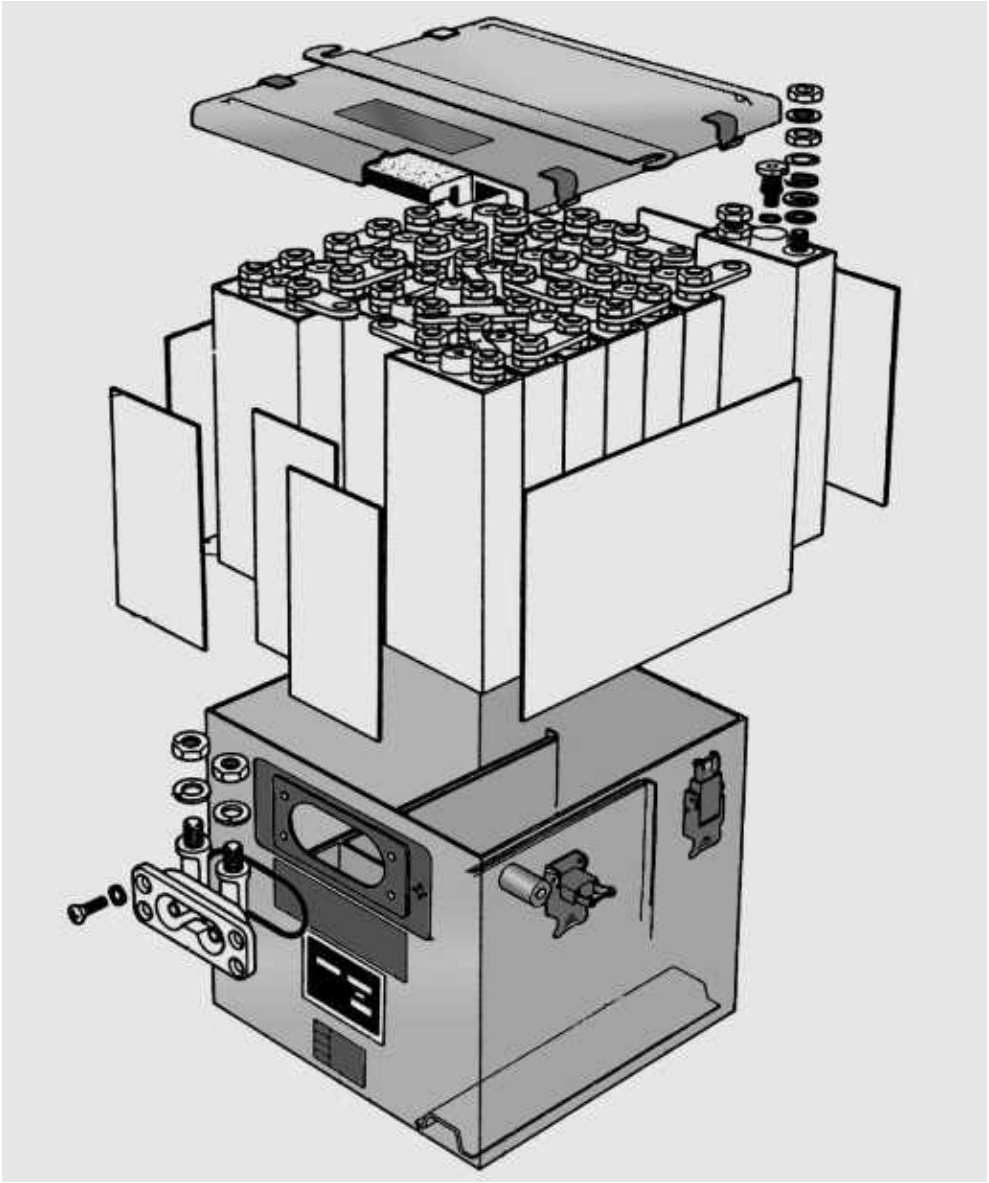



Figure 28 Aircraft Battery (Nickel-Cadmium)

FOR TRAINING PURPOSES ONLY!

© Lufthansa Technical Training

Other galvanic Cells, round Cells and flat Cells

General

There are single cells, designed as round cells and flat cells (coin cells). The combination of cells is called a battery. Both round cells and flat cells are manufactured in different sizes and thus different capacities (but with the same voltage). Depending on their size they have the following trade names and standard designations according to IEC / JIS (Japan), as well as the stated dimensions and capacities (e. g. for round cells, see below).

Mercury oxide coin cells

They consist of pressed zinc powder as negative pole and mercury–oxide (chemical symbol HgO) as positive pole. The electrolyte is lime potash. The rated voltage is 1.35V. Particular characteristics are a constant internal resistance during the whole discharging process and a constant voltage even at continuous operation.

The figure shows the section of a mercury oxide coin cell.

The cell is used for hearing aids, watches, meters, exposure meters, cameras, pocket calculators etc.

Silver oxide coin cells

They contain silver oxide, lime potash and zinc; they have a high energy density and a low voltage depression. The rated voltage is 1.55V and they are used for gadgets.

Lithium coin cells

They come in multiple combinations and designs. They have high rated voltages of up to 3.5V, a high energy density and a high lifespan. Lithium silver chromate cells are used for pacemakers, for cameras, video cameras and many other devices.

Nickel Cadmium Batteries

They also come as round cells or coin cells. The gases generated during the charging process are bound again.

Hence the electrolyte does not change. NiCd–batteries are used for notebook computer, radios, TVs etc.

FOR TRAINING PURPOSES ONLY!

© Lufthansa Technical Training

Name	IEC	JIS	Diameter (mm)	Size (mm)	Capacity (mAh)
Mono	R20	UM-1	34	61.5	18000
Baby	R14	UM-2	26	50	7750
Mignon	R6	UM-3	14.5	50.5	2700
Micro	R03	UM-4	10.5	44.5	1175
Lady	R1	UM-5	12	30	400

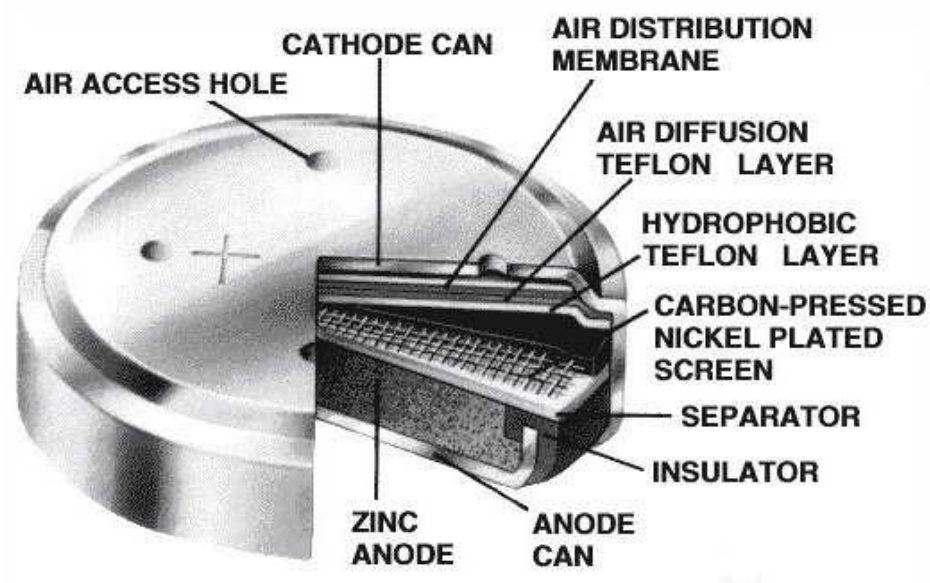

Figure 29 Mercury Oxide Coin Cell

FOR TRAINING PURPOSES ONLY!

© Lufthansa Technical Training

M3.4 GENERATION OF ELECTRICITY

Magnetism

Induction

If a coil enters the magnetic field of a magnet, an electrical voltage is generated in the coil during the movement. This kind of voltage generation is referred to as **induction**.

The basic principle of induction is a change of the magnetic field in vicinity of coils.

Due to the movement of the conductor and the influence of the magnetic field, the free electrons of a conductor are deflected in one direction. These electrons form a magnetic field, which superimposes on the external magnetic field. This causes the electrons to deflect in the longitudinal direction of the conductor. The result is a charge difference at the ends of the conductor; on one side of the conductor there is a deficiency and on the other side an excess of electrons, i. e. an electrical voltage is generated.

Generator Principle

Induction is the most important form of voltage generation in engineering. Being the operating principle of all generators, it is also referred to as the generator principle. The induced voltage increases at the same rate as the magnetic field strength, the movement speed and the effective length of the conductor.

AC

As a Generator always contains rotating parts AC is produced.

The direction of the induced voltage depends on the movement direction and the direction of the magnetic field.

Application

Applications of induction can be found in generators, magnetic pick–up devices, moving–coil microphones and field telephones.

FOR TRAINING PURPOSES ONLY!

© Lufthansa Technical Training

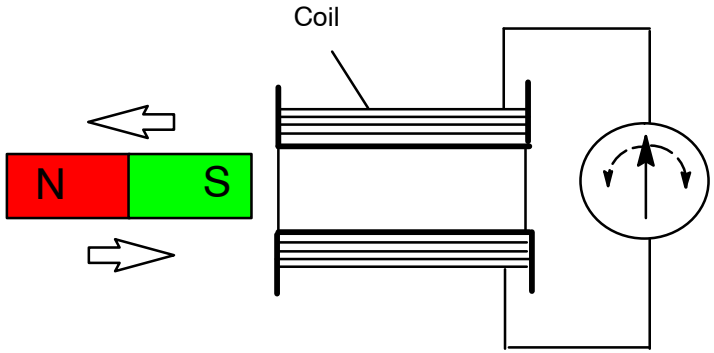

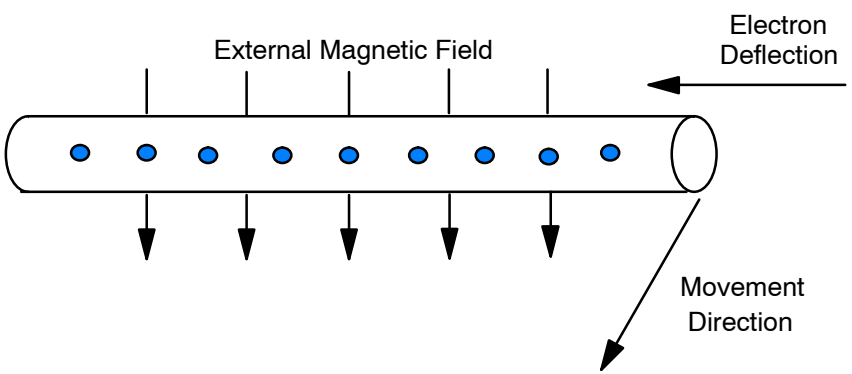

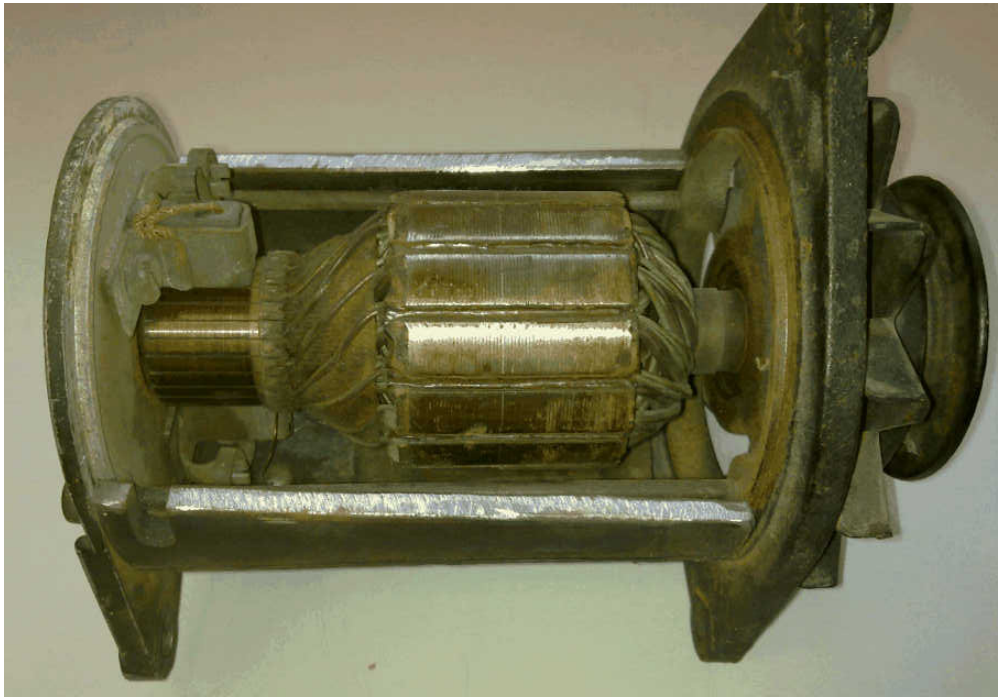

Figure 30 Generator Principle

FOR TRAINING PURPOSES ONLY!

© Lufthansa Technical Training

M3.3 ELECTRICAL TERMINOLOGY

THE FOLLOWING TERMS, THEIR UNITS AND FACTORS AFFECTING THEM:

Resistance

General

Voltage forces Electrons to move across a metallic conductor, there is an electric current.

As these conductors have an atomic grid the electrons will collide with the nucleuses from time to time. The speed of movement is reduced to a few millimetres per second. The material has a resistance.

Resistance is an opposition to the electron flow.

Symbol for Quantity and Unit

The symbol for resistance is R.

Resistance is measured in ohms (Ω , greek capital letter omega).

FOR TRAINING PURPOSES ONLY!

© Lufthansa Technical Training

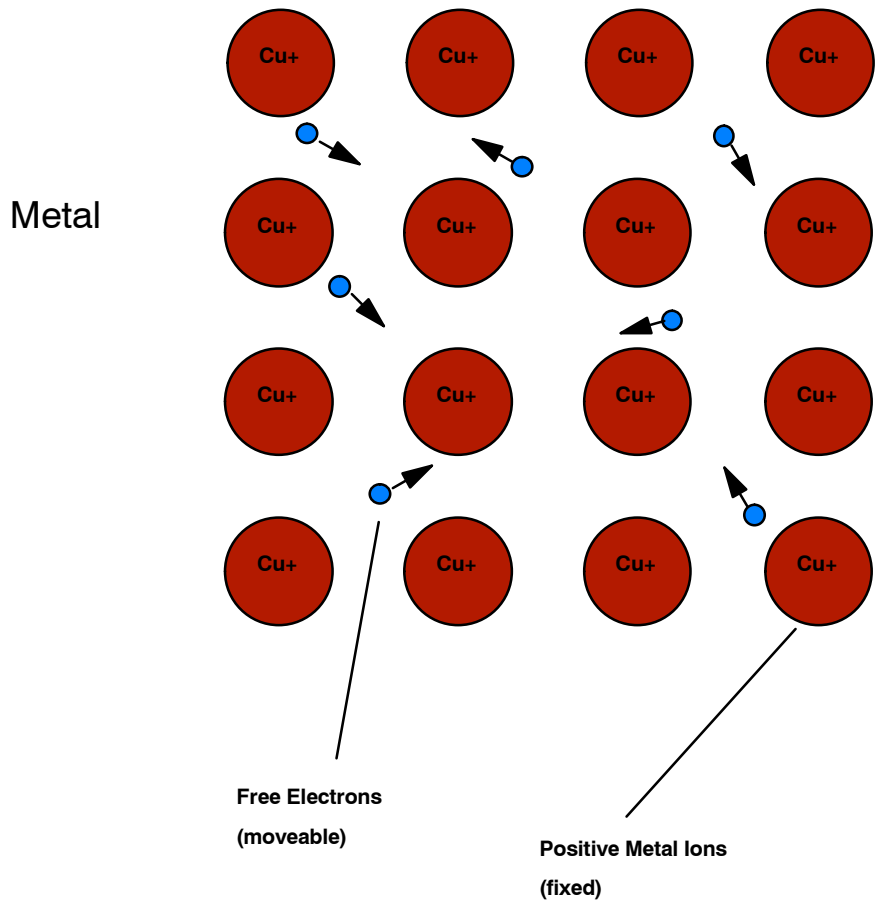

Figure 31 Resistance

FOR TRAINING PURPOSES ONLY!

© Lufthansa Technical Training

Conductance

General

As you are aware, electrical resistance indicates to what extent an electrical current is restricted. The higher the resistance, the more the current is restricted. It can also indicate how effectively current is conducted. This is expressed by the electrical conductance.

High resistance – low conductance

Low resistance – high conductance

To indicate components that represent the conductance in a circuit diagram, the conventional resistor symbol is used. This is because the conductance is the reciprocal of the resistance.

The conductance is the reciprocal of the resistance.

Usage

In electrical terms mainly the resistance is used, for example when electrical circuits are calculated. The conductance G is rarely used.

Symbol for Quantity and Unit

The symbol of the conductance is G.

This unit is referred to as ”Siemens”, the symbol for it is ”S”.

Formula

The formula is this:

$$G = \frac{1}{R}$$

Example

A conductor has a resistance of 5 ohms.

What is its Conductance?

$$G = \frac{1}{R} = \frac{1}{5\,\Omega} = 0.2\,S$$

The conductance is 0.2 Siemens

’Ernst Werner v. Siemens (1816–1892), German engineer

’Georg Simon Ohm (1789–1854), German physicist

FOR TRAINING PURPOSES ONLY!

© Lufthansa Technical Training

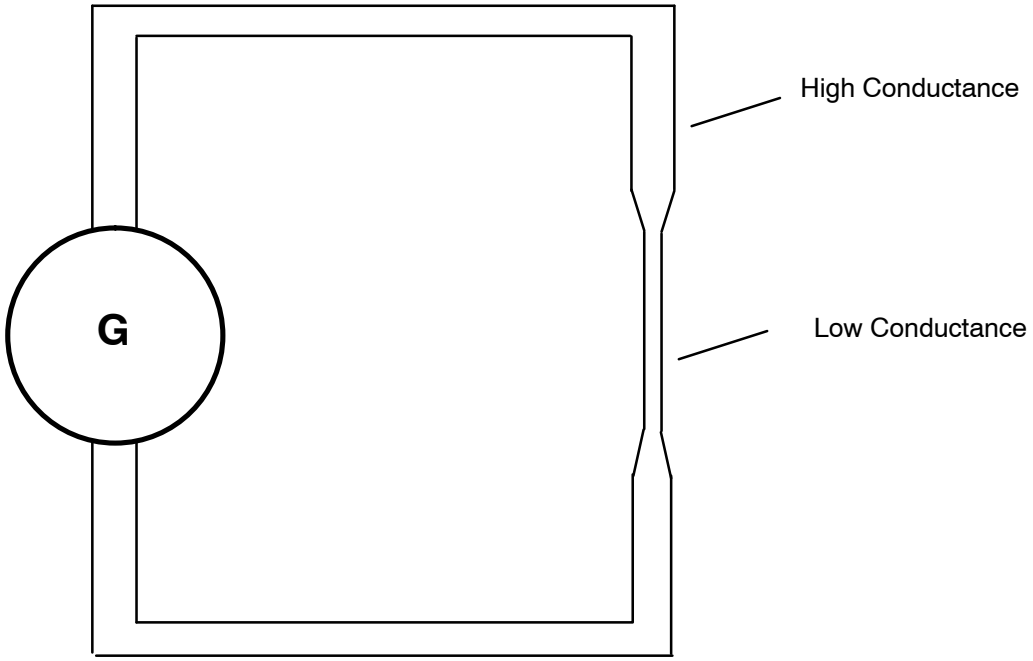

Schematic Of Current Path

The larger the cross−sectional area of the current path, the higher the conductance

Figure 32 Conductance

FOR TRAINING PURPOSES ONLY!

© Lufthansa Technical Training

M3.6 DC CIRCUITS

OHMS LAW

Electric Circuit

General

An electrical circuit is given if the following conditions are met:

- There is a source for electrical power
- There is a consumer load with a electric resistivity
- There is a lead with a very small electric resistivity which connects the consumer load with the power source
- Electrical current can flow from the power source through the consumer load and back to the power source.

Consumer Load

Various components are consumer loads:

- Lamps
- Motors
- Resistors (component)
- Heaters
- Complex electrical circuits
- Computers.

Ohms Law

Resistance

The opposition to the current flow is given by the ratio of voltage and current :

$$R = \frac{U}{I}$$

The ratio of voltage and current is given by Ohms Law.

It says that at a given device the ratio of voltage and current is constant.

It does not depend on the voltage applied or the current flow.

Devices

To calculate the resistance of a device one can meter the voltage drop across that device as well as the current flow and just divide the voltage by the current.

FOR TRAINING PURPOSES ONLY!

© Lufthansa Technical Training

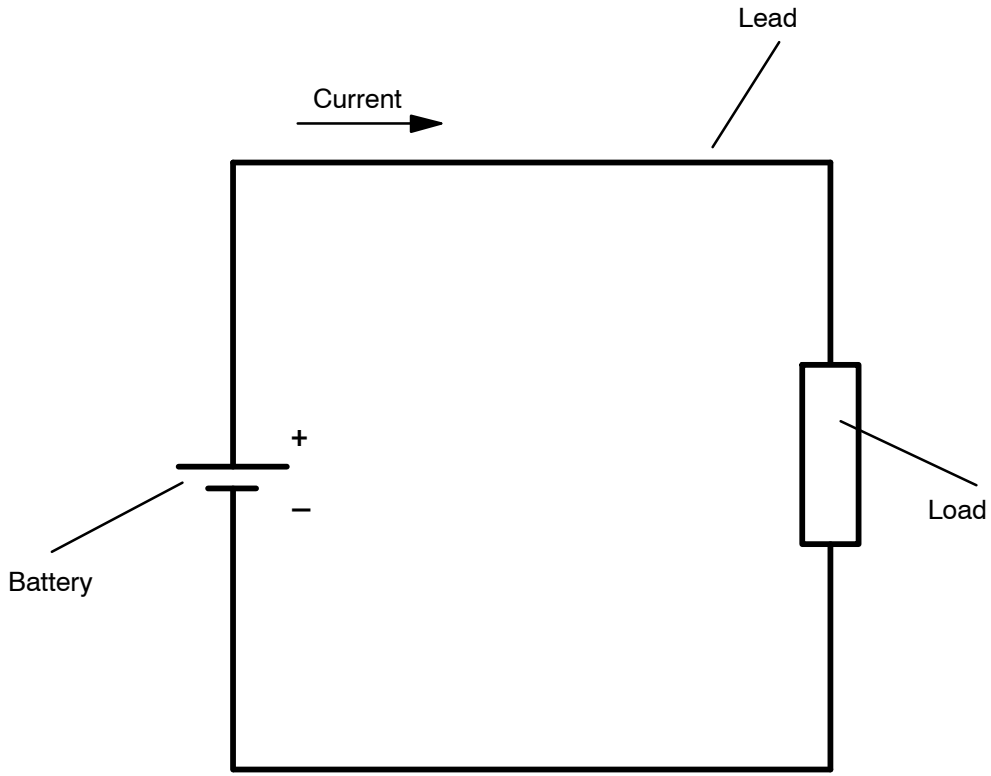

LTT

Figure 33 Electric Circuit

FOR TRAINING PURPOSES ONLY!

© Lufthansa Technical Training

CALCULATIONS USING THE ABOVE LAWS

EXAMPLES

Example 1

In an electric circuit, the battery voltage is 10 volts.
With a meter, we find out that the current is 0,2 amperes.
What is the resistance?
Now we use Ohm's law:

$$R = \frac{U}{I}$$

$$R = \frac{10V}{0,2A} = 50\Omega$$

Example 2

In an electric circuit, the battery voltage is 10 volts.
An electric load has a resistance of 200Ω.
What is the current?
Now we use Ohm's law:

$$R = \frac{U}{I}$$

To calculate I, the formula is as follows:

$$I = \frac{U}{R}$$

$$I = \frac{10V}{200\Omega} = 0,05A$$

The current is 50 mA.

FOR TRAINING PURPOSES ONLY!

© Lufthansa Technical Training

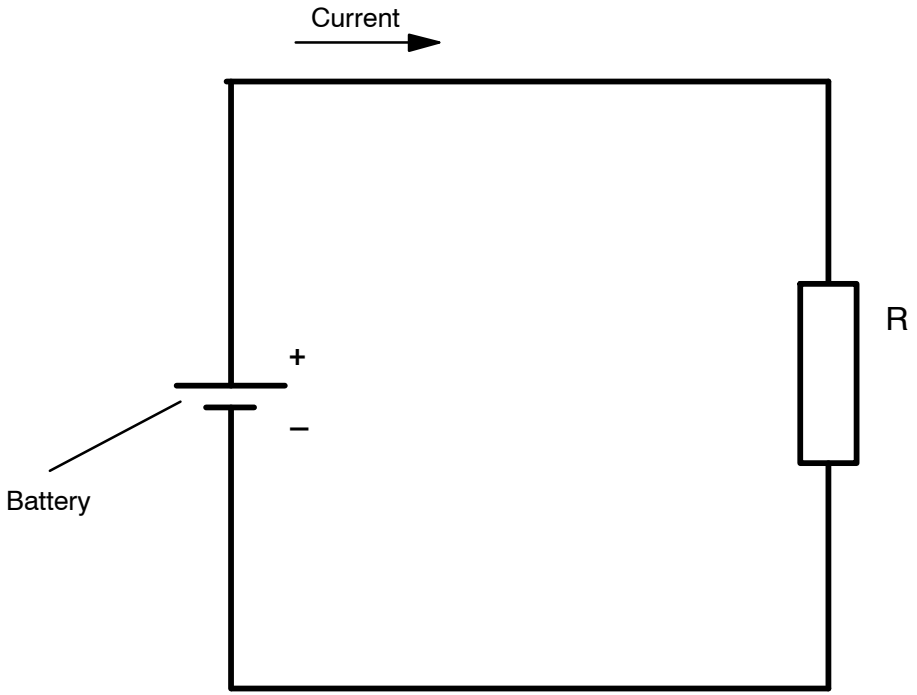

LTT

Figure 34 Electric Circuit

FOR TRAINING PURPOSES ONLY!

© Lufthansa Technical Training

M3.7 RESISTANCE / RESISTOR

RESISTANCE AND AFFECTING FACTORS

Affecting Factors

General

Voltage forces Electrons to move across a metallic conductor. As these conductors have an atomic grid the electrons will collide with the nucleuses from time to time. The speed of movement is reduced to a few millimetres per second. The material has a resistance.

Resistance is an opposition to the electron flow.

Material

The most important factor is the material itself. Each material has its own specific resistance.

The specific resistance of copper is very low. The specific resistance of many plastic materials is high, they are used for the isolation of leads.

Temperature

A change in temperature of a conductor will change its resistance as the amount of electrons being available for conduction may vary as well as the mobility of the electrons inside the conductor.

Usually a reference temperature of 20 degrees Celsius is assumed.

Frequency

When AC is applied to a conductor the alteration of the current causes alterations of the magnetic field produced by the current flow.

This applies to the magnetic field around the conductor as well as the magnetic field inside the conductor. As a change in magnetic fields exerts forces on charges the electrons are forced outside the conductor making the centre current-free. Only the surface of the conductor will be available for current conduction. This effect is known as „Skin-Effect“.

The magnitude of such a Skin Effect depends on the frequency: The higher the frequency the stronger the effect will be.

FOR TRAINING PURPOSES ONLY!

© Lufthansa Technical Training

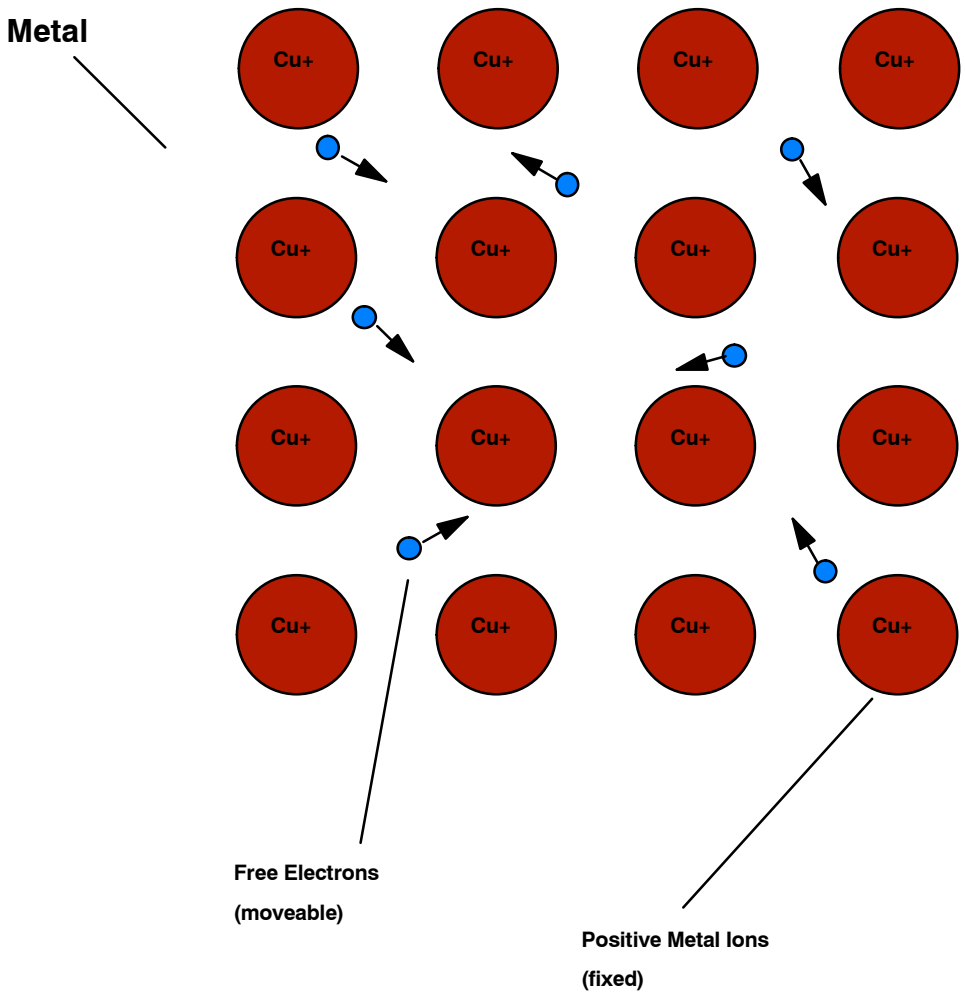

Figure 35 Resistance of a Lead

FOR TRAINING PURPOSES ONLY!

© Lufthansa Technical Training

SPECIFIC RESISTANCE

Calculation

As all material has an atomic and molecular structure, it opposes the flow of an electric current to a different extent.

In order to compare resistances of various materials, it is necessary to use bodies from these materials, which have exactly the same dimensions.

The following dimensions are specified for these bodies:

- length: l = 1 m
- cross sectional area: A = 1 mm^2
- temperature: 20° C

The temperature has to be specified as it would have an influence on the resistance as well.

The resultant resistances values are known as electrical resistivity or specific electrical resistance.

Specific Resistance is a properties of the material. It only depends on the material used and NOT on the dimensions of the device.

Specific Resistance is also called resistivity.

Symbol for Quantity and Unit

Its symbol is the lower case Greek letter Rho (ϱ).

$$[\varrho] = \frac{\Omega \times mm^2}{m}$$

Notice that the unit of the resistivity is not ohm. As the dimensions of the wire is l = 1 m, A = 1 mm^2. The unit is Ω per m, Ω per mm^2.

Formula

$$\varrho = \frac{R \times A}{l}$$

Resistance of Leads

The specific resistance is used to calculate the resistance of conductors of any size.

Material	ϱ =Ω x mm^2 / m at 20^0C
Copper	0.01786
Aluminium	0.02857
Iron	0.10 . . . 0.15
Silver	0.016
Gold	0.023

Constantan

There is one alloy which has a constant resistivity over a wide range of temperatures. It is called “constantan“.

$$\varrho = 0,49 \frac{\Omega \times mm^2}{m}$$

Example

At a temperature of 20 °C a copper wire with the length of 1 m and a cross sectional area of 1 mm^2 has a resistivity of 0.0178 Ω.

If the length of the copper wire is doubled while the cross sectional area of 1 mm^2 remains constant, the resistivity is twice as high, i.e. 0.0356 Ω.

A wire three times as long will have a resistivity, which is three times higher.

The resistance value R is proportional to the length of the conductor providing that the cross sectional area remains constant.

$$R \sim l$$

∼ symbol for proportional.

l is a lower Case L for length.

If the cross sectional area of a lead is doubled the resistance is only half the former value.

FOR TRAINING PURPOSES ONLY!

© Lufthansa Technical Training

$$\frac{\Omega}{m/mm^2} = \frac{\Omega \times mm^2}{m}$$

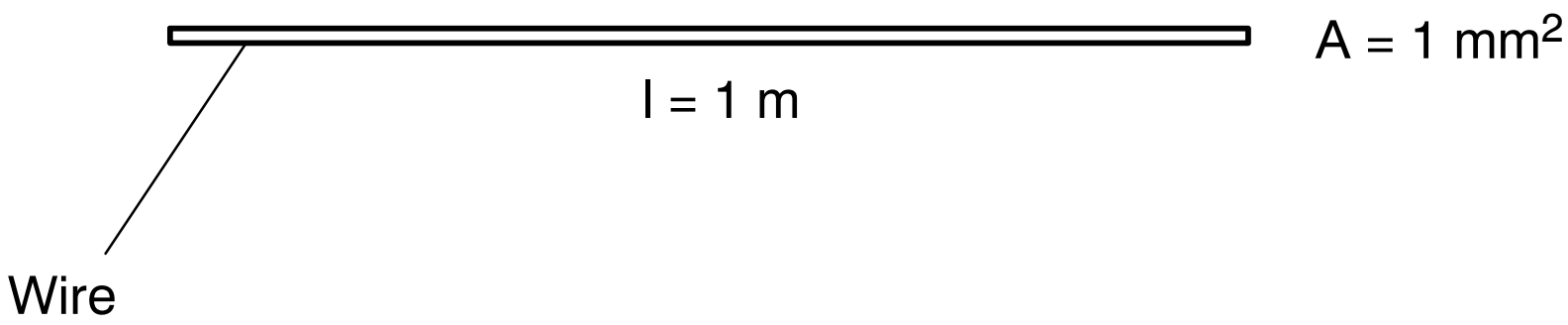

Figure 36 Specific Resistance

FOR TRAINING PURPOSES ONLY!

© Lufthansa Technical Training

RESISTOR COLOUR CODE, VALUES AND TOLERANCES, PREFERRED VALUES, WATTAGE RATINGS

Resistors

Device

An electrical device which has a specified ohmic resistance is called a resistor.

They are produced with different valued of resistance, tolerances and load capacities.

Colour Code

If you buy a resistor, you are normally not interested in its characteristics like its material or its dimensions; you only want to know the resistance. Resistor manufacturers help us by indicating the resistance value and the tolerance value with a colour code on small resistors.

On big resistors the resistance value may also be printed on.

Each colour represents a value:

Colour	1. Digit	2. Digit	Factor	Tolerance
None	-	-	-	± 20%
Silver	-	-	10^{-2}	± 10%
Gold	-	-	10^{-1}	± 5%
Black	-	0	1	-
Brown	1	1	10	± 1%
Red	2	2	10^{2}	± 2%
Orange	3	3	10^{3}	-
Yellow	4	4	10^{4}	-
Green	5	5	10^{5}	± 0.5%
Blue	6	6	10^{6}	-
Violet	7	7	10^{7}	-
Grey	8	8	10^{8}	-
White	9	9	10^{9}	-

FOR TRAINING PURPOSES ONLY!

© Lufthansa Technical Training

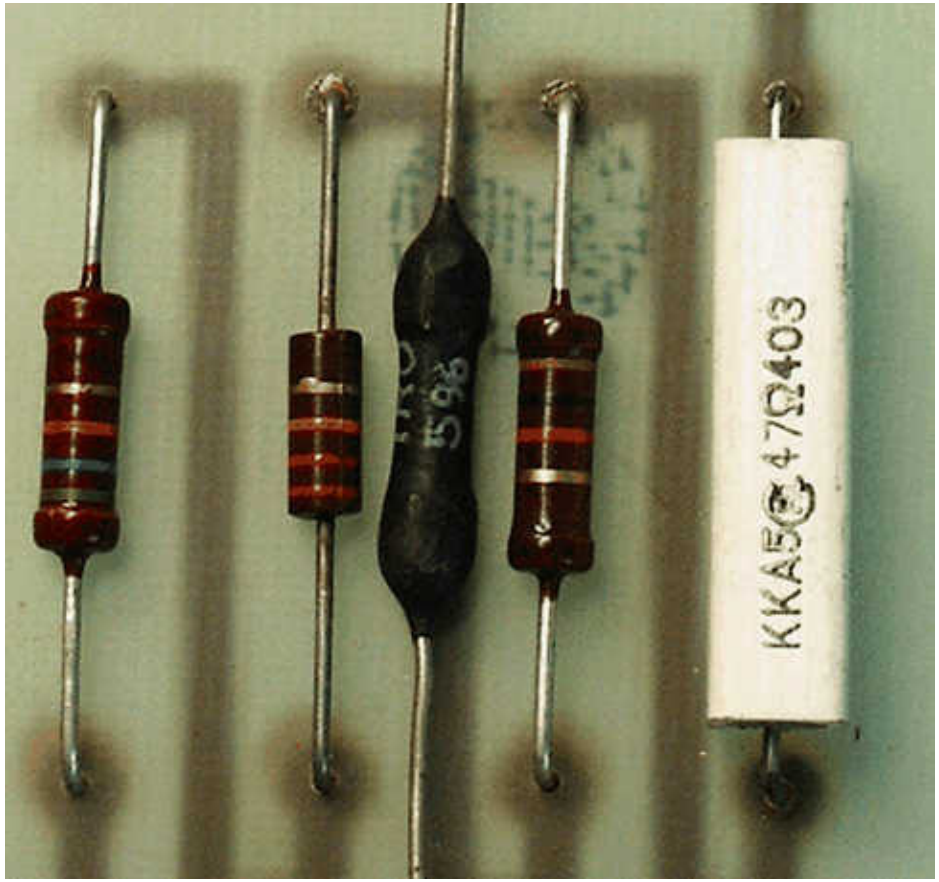

Resistors

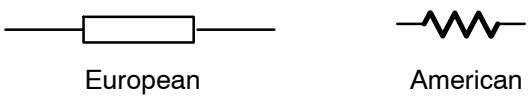

Wiring Symbol

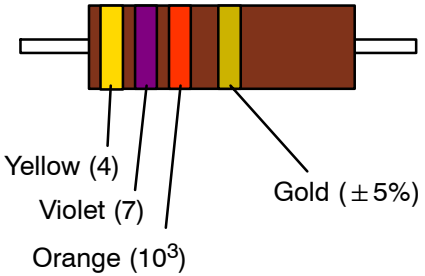

47 000 Ω

Example for Col or Code

Figure 37 Shapes of Resistors

FOR TRAINING PURPOSES ONLY!

© Lufthansa Technical Training

Ranges and Tolerances

Ranges

Resistors are produced with particular rated values according to the IEC standard range. Each of the ranges has its own particular factor or percentage, which determines how much bigger a value is than its predecessor. (that defines the difference between one value and the successive value)

Preferred values are those of the E12 and the E24 range.

Within a decade (i.e. from 1 to 10 Ohms) of these ranges there are 12 or 24 values.

Preferred Value

These numbers result from the increase factors associated with the decades. For the E12 range this factor is 1.2, for the E24 range it is 1.12.

If, for example, the result of a calculation is 500 Ohms, the closest standard value, i.e. 470, must be used (see figure below). The same rule applies to the other standard ranges.

Tolerance

The tolerance of a resistor indicates to what extent it may differ from the rated value. Hence there is a close connection between IEC–range and tolerance. The allocation is done in such a way that the sections overlap one another, i.e. basically no waste is produced.

For the E12–range, for example, the tolerance is 10 %.

Range	E6	E12	E24	E48
Tolerance in %	±20	±10	±5	±2

E6, ±20%	E12, ±10%	E24, ±5%
1,0	1,0	1,0
		1,1
	1,2	1,2
		1,3
1,5	1,5	1,5
		1,6
	1,8	1,8
		2,0
2,2	2,2	2,2
		2,4
	2,7	2,7
		3,0
3,3	3,3	3,3
		3,6
	3,9	3,9
		4,3
4,7	4,7	4,7
		5,1
	5,6	5,6
		6,2
6,8	6,8	6,8
		7,5
	8,2	8,2
		9,1

FOR TRAINING PURPOSES ONLY!

© Lufthansa Technical Training

Example: Resistors with 10% Tolerance

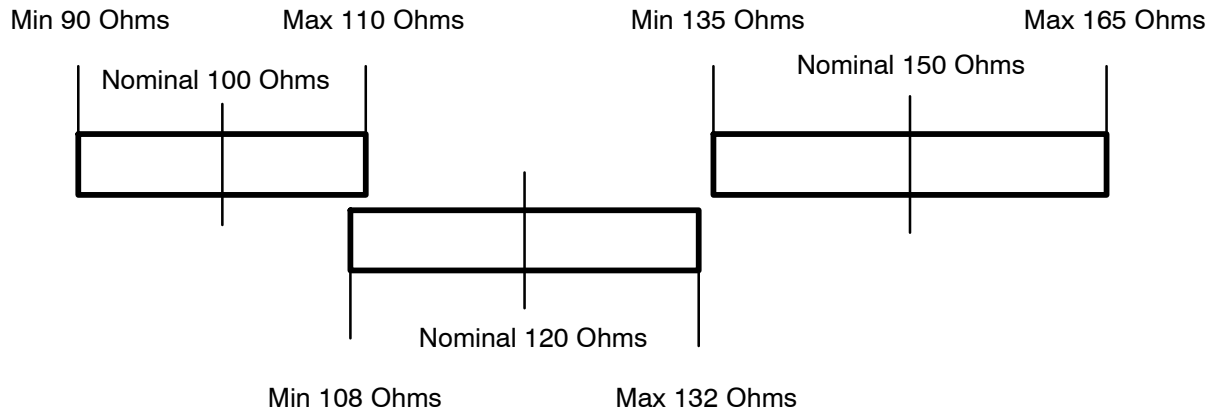

Figure 38 Tolerances of Resistors

FOR TRAINING PURPOSES ONLY!

© Lufthansa Technical Training

Wattage Ratings

Watt Specifications and Load Capacity (in Watts)

The electrical energy applied to a resistor is converted completely into heat.

Due to the energy supplied the temperature of a resistor material increases. The technological and physical properties of the resistor material deteriorates if too much heat is applied to it.

Protection against Damage

To avoid destruction, e.g. by burning or melting, it must be possible for the resistor to release heat to its environment.

This can be achieved, for example, by increasing the surface while maintaining the cross–sectional area of the resistor or by thick leads.

However, these measures cannot be carried out infinitely – that means the load capacity of resistors is limited. The load capacity of such components is defined as the power that can be applied to the resistor without affecting its function.

The load capacity decreases if the component is exposed to a higher ambient temperature (e.g. thermal problems in circuits).

DIN 44050 (Deutsche Industrie Norm → German Industrial Standard) standardizes the power rating values. For small components these values range between 50 mW and 500 mW; big wirewound resistors can cope with 100 W and more.

Besides the rated value of the resistor the load capacity at the ambient temperatures of 40° C and 70° C is often stated.

Code-Nr	Dimensions in mm Diameter x Length	Max. thermic Resistance R_{th} in K/W	Power Dissipation P in W
0103	0,7 x 2,5	–	0,125
0204	1,6 x 4,0	400	0,25
0207	2,6 x 7,5	220	0,33
0414	4,0 x 13,5	140	0,5
0933	8,8 x 33,0	50	1,1

FOR TRAINING PURPOSES ONLY!

© Lufthansa Technical Training



Solder Type



Cemented



Solder tap connection

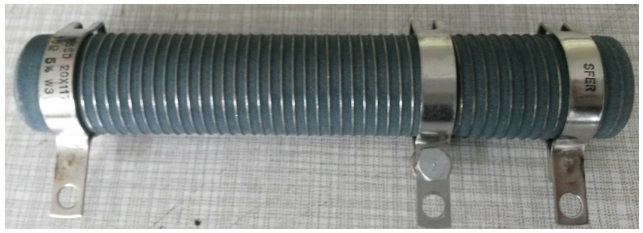

Unprotected



Clamp type connection



Glazed

Figure 39 Shapes of Resistors

FOR TRAINING PURPOSES ONLY!

© Lufthansa Technical Training

FIXED RESISTORS: METHODS OF CONSTRUCTION

Methods of Construction

General

Depending of the application of resistors special requirements concerning temperature stability, tolerance and frequency response may be required.

Carbon based Resistors

The most simple type of resistor is a small rod of carbon.

To achieve the resistance desired the carbon is mixed with non-conductive materials like ceramics. Its resistance is highly temperature dependant and can only be used for DC and low frequency AC.

Carbon film resistors consist of a carrier made from insulating material where a thin layer of carbon is allied. A helix is cut into that carbon coating creating a long narrow resistive path. It is also temperature dependant and highly sensitive to frequencies as the helix is very similar to an inductor with several windings. Due to the thin conductive path only small amounts of current may be applied.

Metal Film / Metal Oxide Resistors

The construction of metal film / metal oxide resistors is similar to the carbon film resistors but instead of carbon metal alloys are used. This will give very exact resistances (low tolerance). These alloys are made from materials with different temperature coefficients making them nearly temperature independent.

Like the carbon film resistors they are quite limited in their current carrying capacity and are frequency sensitive.

Wirewound Resistors

Wirewound resistors are made from a metal wire around a non-conductive carrier like plastics or ceramics. They are mainly used for high currents as their large surface will provide good heat dissipation properties.

As their construction is nothing else but a coil around a core they can only be used for DC and low frequencies.

Large currents will create strong magnetic fields around such resistors. To overcome that sometimes bifilar windings are used.

Thick Film Resistors (SMD)

In modern devices the so-called SMD (Surface Mounted Devices) techniques is used.

Instead of drilling holes for the terminal wired into the printed circuit board (PCB) the SMD devices are soldered on the surface of the PCB. This will ensure minimum space requirements. Usually such SMD resistors are very small, their dimensions may be as small as 2 x 4 mm only.

Here a metal-oxide paste is applied to a ceramic substrate. As this production process is quite inaccurate they are trimmed to the desired value by laser abrasion allowing very low tolerances.

They can only be used for very small currents and are temperature sensitive.

FOR TRAINING PURPOSES ONLY!

© Lufthansa Technical Training



Carbon Film / Metal Film Resistors



Wirewound Resistor with ceramic housing



SMD Resistor

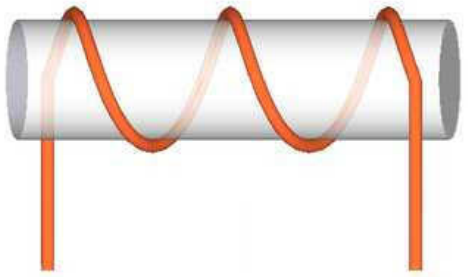

Wirewound Resistor

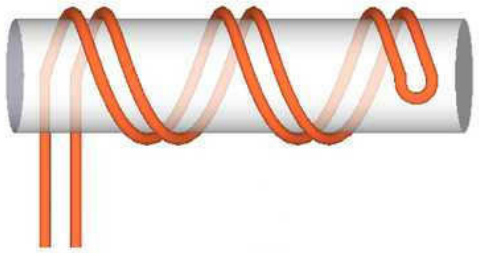

Wirewound Resistor with bifilar winding

Figure 40 Shapes of Resistors

FOR TRAINING PURPOSES ONLY!

© Lufthansa Technical Training

CONSTRUCTION OF POTENTIOMETERS AND RHEOSTATS

Potentiometers and Rheostats

Potentiometer

For some purposes it may be necessary to vary the resistance e.g. the volume control of an entertainment system. This type of resistor is called a potentiometer. So a potentiometer is a variable resistor.

In low load potentiometers the resistor path (a–b) is made from carbon. C is just a ”pick–up”.

A potentiometer has three connections.

Trimmer/Rheostat

A rheostat is used for calibration purposes i.e. one–time settings. It can be compared with a potentiometers without set knob. Rheostats can be set to a specific value, using for instance a screwdriver, and then are not touched again.

Examples are:

- compass compensation
- adjustment of the volume of the passenger address system.

FOR TRAINING PURPOSES ONLY!

© Lufthansa Technical Training

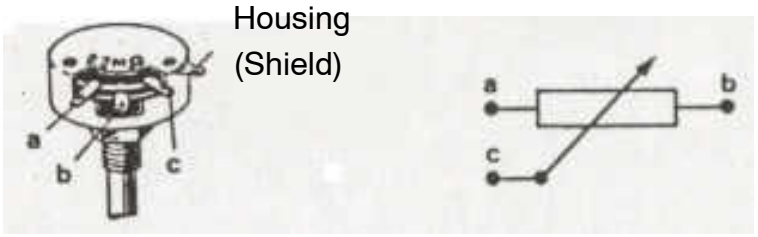

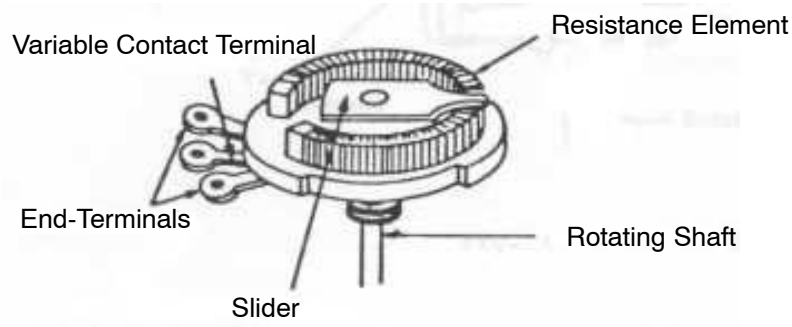

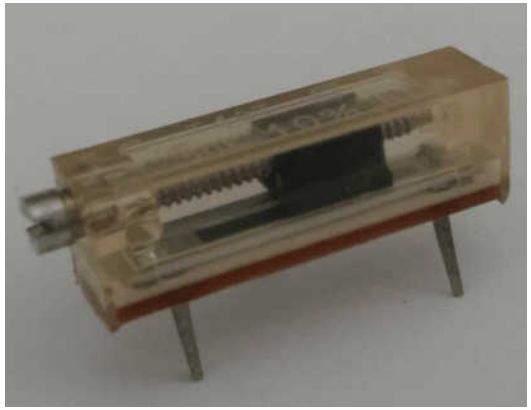

Multi-turn trimmer potentiometer

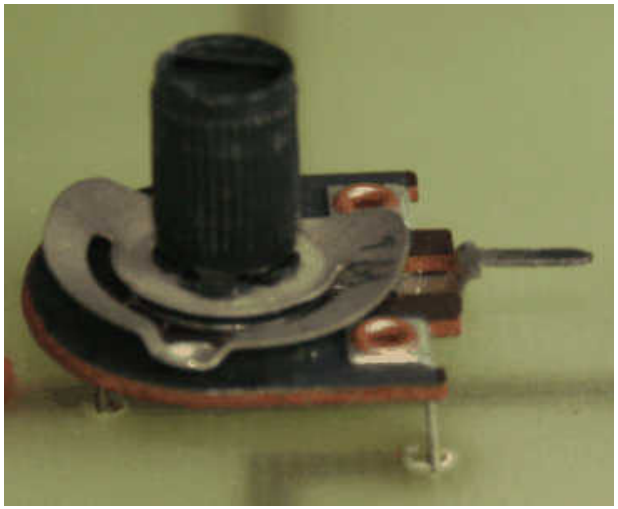

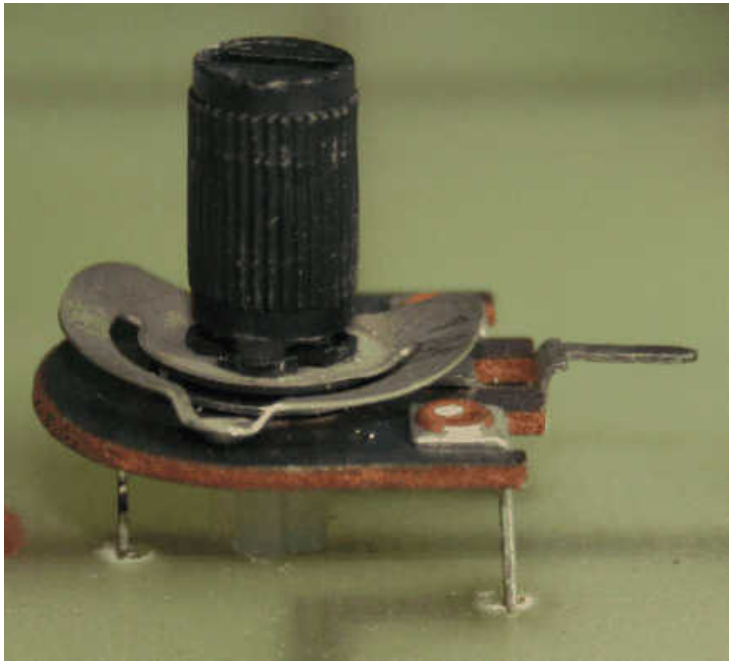

Figure 41 Potentiometers and Rheostats

FOR TRAINING PURPOSES ONLY!

© Lufthansa Technical Training

VOLTAGE–DEPENDENT RESISTORS

Principle of Operation

In the case of voltage dependent resistors the resistance value changes according to the applied voltage

The Voltage dependent resistor is called VDR in short.

The resistance of a VDR decreases as the voltage increases, not depending on the polarity of the voltage.

Characteristic Curve

The characteristic curve of a VDR is not linear.

Symbol

Find the symbol below.

FOR TRAINING PURPOSES ONLY!

© Lufthansa Technical Training

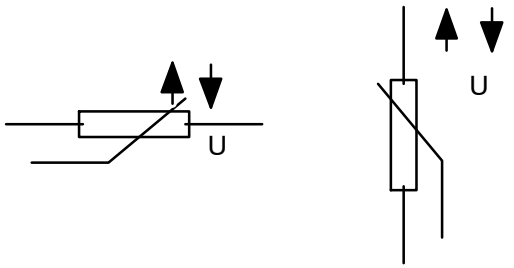

Wiring Symbol



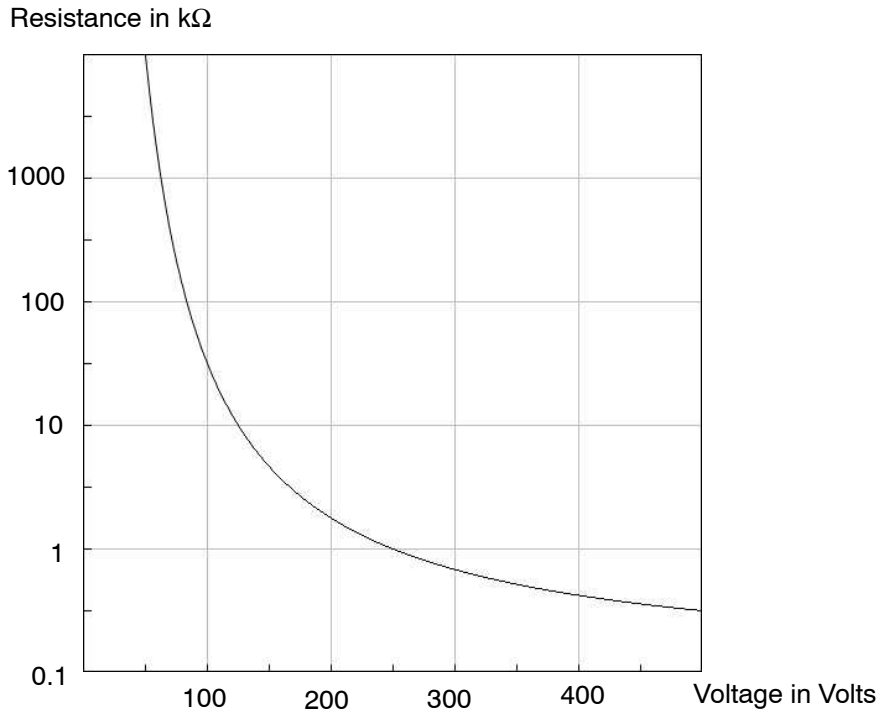

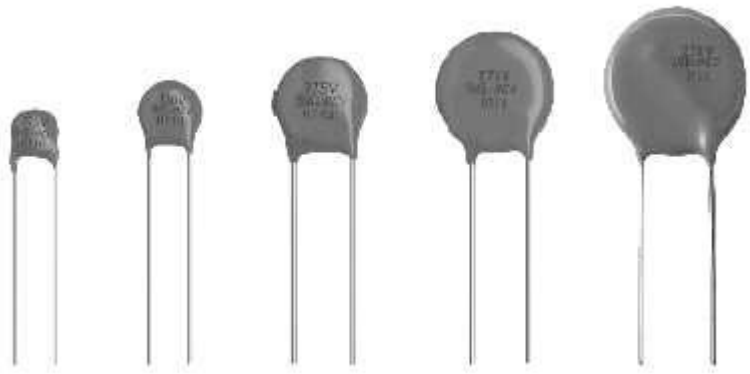

Figure 42 VDR

FOR TRAINING PURPOSES ONLY!

© Lufthansa Technical Training

THERMISTORS

Temperature-Dependant Resistors

General

Normally resistors have the same resistance over a wide range of temperature. They do not change. For some special purposes a change of resistance with temperature might be desirable e.g. for the TAT–probe (measuring the air temperature outside an aircraft).

There are some temperature dependent alloys which offer this feature.

Generally, there are two possible responses to a rise in temperature: the resistance either increases or decreases. Depending on these thermal characteristics there are two thermistor types:

- NTC resistors (negative temperature coefficient)
- PTC resistors (positive temperature coefficient)

Wires

Wires are affected by changes of temperature, too.

Metals like copper or aluminium have a low resistance at low temperatures. They are PTC resistors.

This effect is not desired. When exact results are needed this effect must be included in the calculation.

Calculation of Temperature Dependent Resistance

The resistance can be calculated by the following simple formula:

$$R = R_{20} \times (1 + \alpha \times \Delta\vartheta)$$

That is as follows:

- R_{20}: Resistance value at 20° C (Reference Temperature)
- α: Temperature coefficient that shows the change in resistance in per cent if the temperature changes by 1° C
- $\Delta\vartheta$: deviation from 20° C (ambient temperature).
- ϑ: Theta (temperature)

NTC Resistors

NTC resistors have a negative temperature coefficient α, so that their resistance decreases as the temperature increases.

The materials used for the production of NTC resistors belong to the group of semiconductor materials. NTC resistors are polycrystalline mixed crystals made of iron oxides, cobalt oxides, titanium compounds and specific impurities. If the temperature rises, more and more electrons escape from their bondings. This means that the conductivity of the material increases.

NTC resistors are largely used for the temperature stabilization in semiconductor connections.

NTC resistors are also reliable temperature sensors.

FOR TRAINING PURPOSES ONLY!

© Lufthansa Technical Training

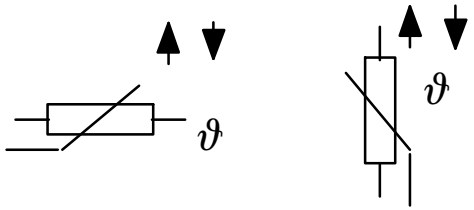

Wiring Symbol

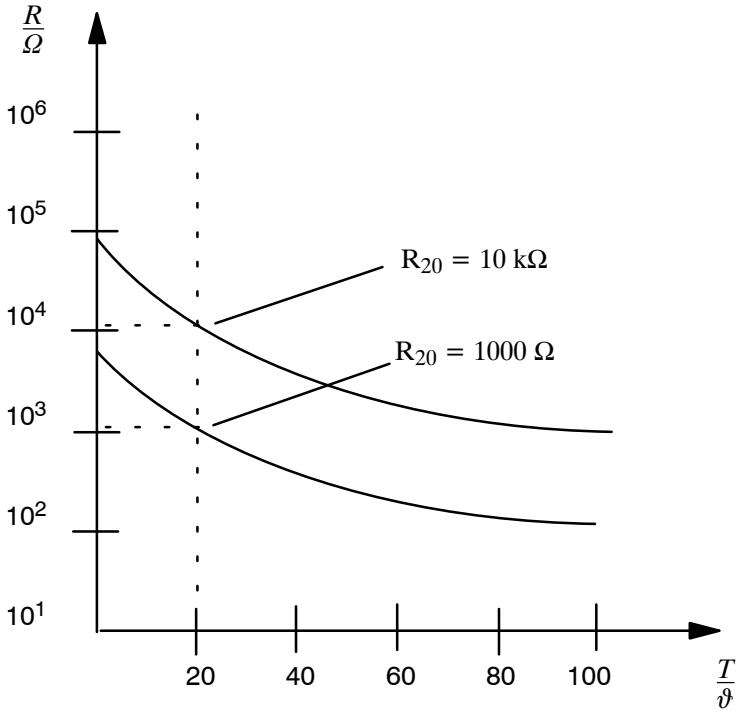

graph of resistance versus temperature





SMD





Figure 43 Characteristic Curve and Shapes of NTC

FOR TRAINING PURPOSES ONLY!

© Lufthansa Technical Training

Usage of NTC

NTC are commonly used as temperature sensors.

This could be a Wheatstone-Arrangement as to measure small temperature deviations as well as a temperature compensation in entertainment / audio amplifiers in order to remove the effects of intrinsic conductivity.

FOR TRAINING PURPOSES ONLY!

© Lufthansa Technical Training

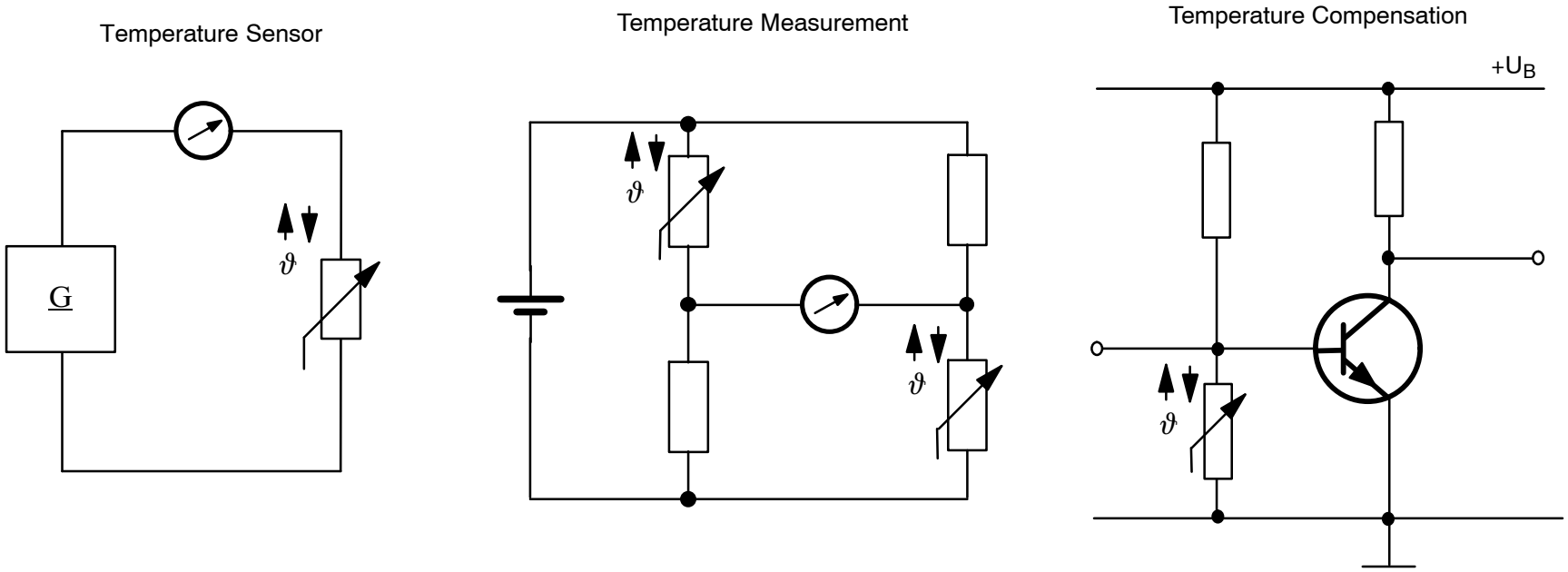

Figure 44 Usage of NTC

FOR TRAINING PURPOSES ONLY!

© Lufthansa Technical Training

PTC Resistors

PTC resistors have a positive temperature coefficient, so that their resistance increases as the temperature increases.

PTC resistors are made of certain types of polycrystalline titanate ceramics. Certain impurities are added to the titanate ceramic. This process is called doping. If the temperature increases, a depletion zone develops between the crystals of the material. This depletion zone then causes the resistance to rise.

Metals

All metals have PTC characteristics so they will conduct better at low temperatures. This is deliberately used with the so called superconductivity.

FOR TRAINING PURPOSES ONLY!

© Lufthansa Technical Training

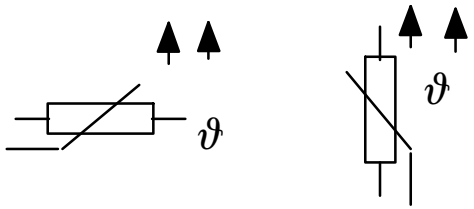

Wiring Symbol

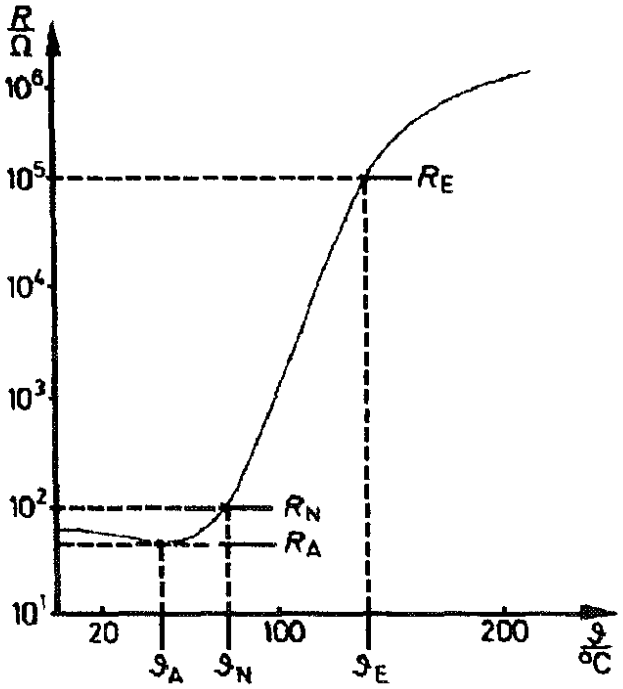

Resistance versus temperature





Figure 45 Characteristic Curve and Shapes of PTC

FOR TRAINING PURPOSES ONLY!

© Lufthansa Technical Training

TAT Probe

In Avionics PTC are commonly used as temperature sensors outside of the aircraft. The TAT probe is a sensor for “Total Air Temperature“.

Humidity could cause oxidation so Platinum resistors are used.

FOR TRAINING PURPOSES ONLY!

© Lufthansa Technical Training

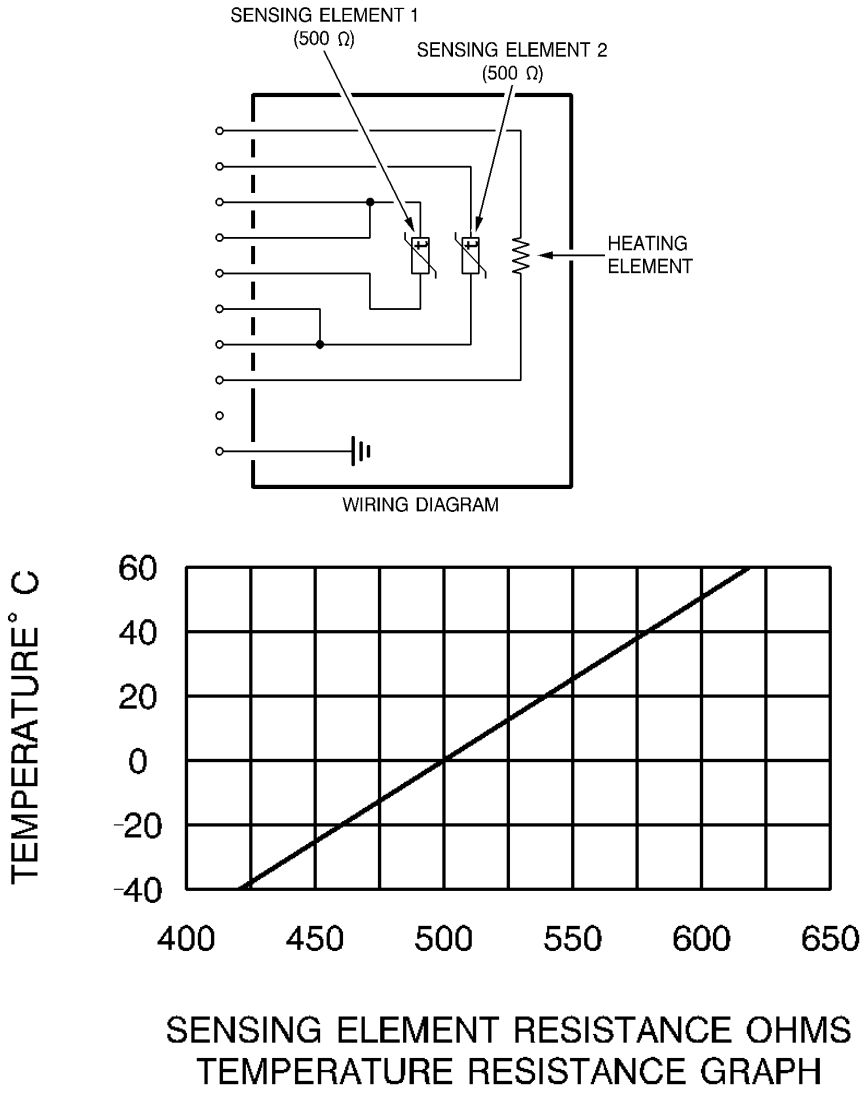

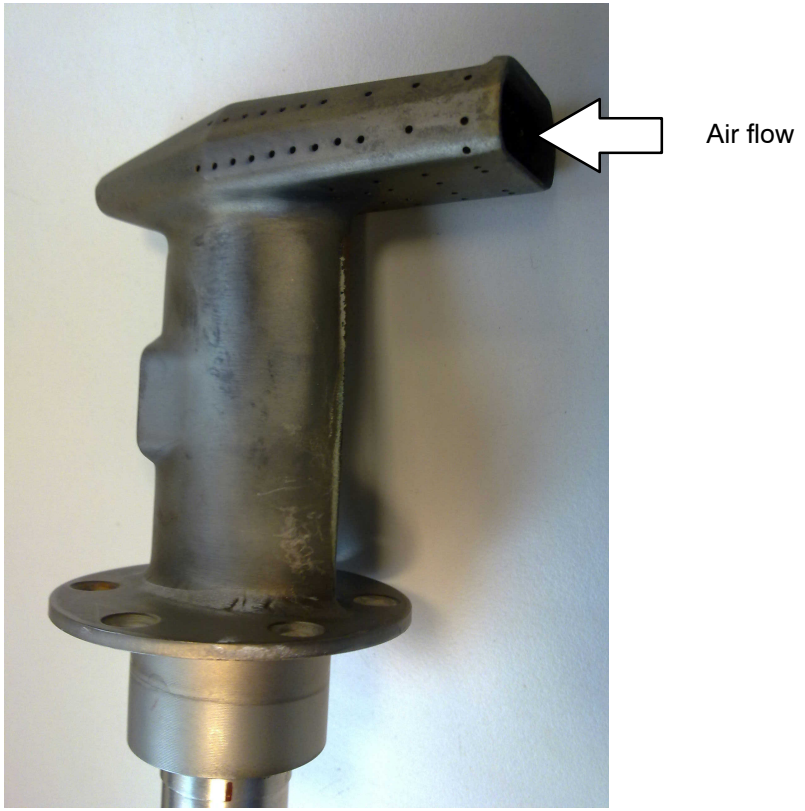

Figure 46 PTC as TAT-Probe

FOR TRAINING PURPOSES ONLY!

© Lufthansa Technical Training

RESISTORS IN SERIES AND PARALLEL

Resistors in Series

General

If resistors are connected in series the current has to pass all the resistors in series like water running through hoses. The current, therefore, has only one way to go. The current is the same in each resistor.

$$I_{total} = I_1 = I_2 = I_3$$

Here it can be seen that the current has to overcome all three resistors. That means that the resistances should be added together. The overall−resistance will be:

$$R_{total} = R_1 + R_2 + R_3 + ...$$

As Ohm's Law is always valid, the voltages of each single resistor can be calculated:

$$U_1 = I \times R_1;\ U_2 = I \times R_2;\ U_3 = I \times R_3 ...$$

As the resistors are connected in series the voltages are also in series. That means that the voltages should be added together in the same way the resistances are added:

$$U_{total} = U_1 + U_2 + U_3 + ...$$

Typical Items

So, there are three typical items to a series connection:

- The voltage provided by the battery is divided between the resistors, depending on their individual resistance;
- There is only one current;
- The individual resistances should be added together.

A series connection is also designated as voltage divider. Each resistor has only a part of the total voltage. Thus part of the input voltage can be tapped at a certain point called the "pick−up".

FOR TRAINING PURPOSES ONLY!

© Lufthansa Technical Training

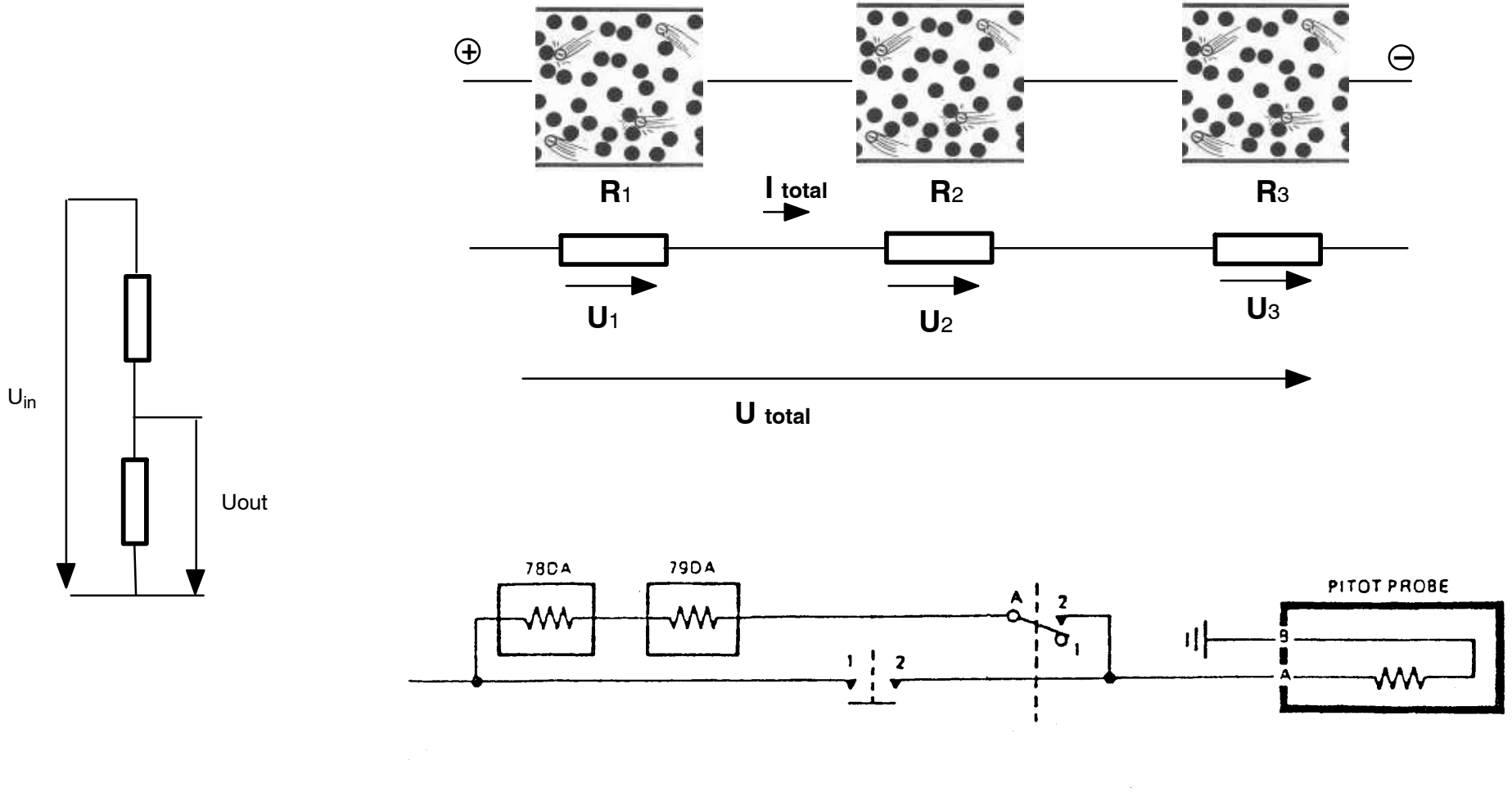

Figure 47 Resistors in Series

FOR TRAINING PURPOSES ONLY!

© Lufthansa Technical Training

Resistors in Parallel

General

Connecting resistors in parallel offers more than one path for the current. So the current splits up and flows through all available paths. Instead of only one path there are several paths which means an increasing conductor cross section.

$$I_{total} = I_1 + I_2 + I_3 + ...$$

Each resistor receives part of the current. With resistors in parallel the area through which the current can flow increases. That means that the resistance decreases.

The total resistance is lower than the lowest individual resistance.

Calculation

The total resistance can be calculated as follows:

$$R_{total} = \frac{R_1 \times R_2}{R_1 + R_2}$$ (for 2 Resistors) or

$$R_{total} = \frac{1}{\frac{1}{R_1} + \frac{1}{R_2} + ... + \frac{1}{R_n}}$$ (for several Resistors)

Typical Items

There are three typical items to a parallel connection:

- voltage is the same to every individual resistor
- the total current is the sum of all individual currents
- the total resistance is lower than the lowest individual resistance

FOR TRAINING PURPOSES ONLY!

© Lufthansa Technical Training

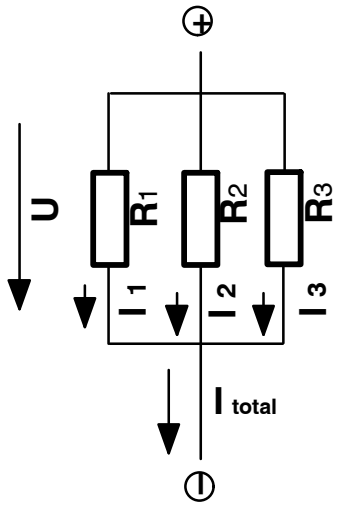

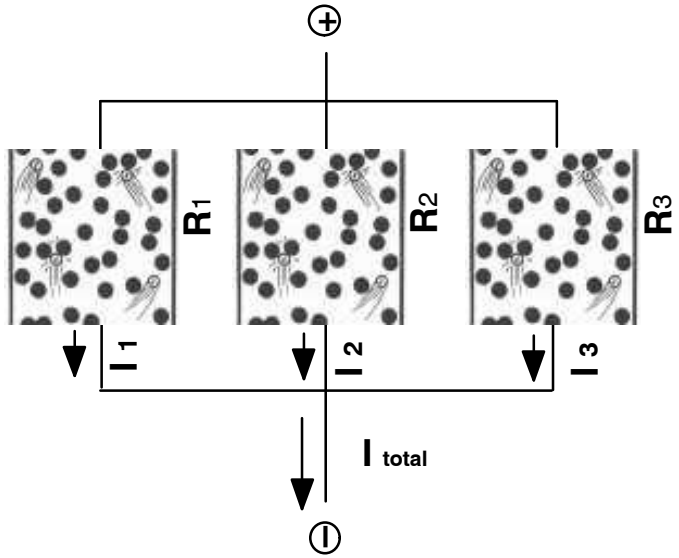

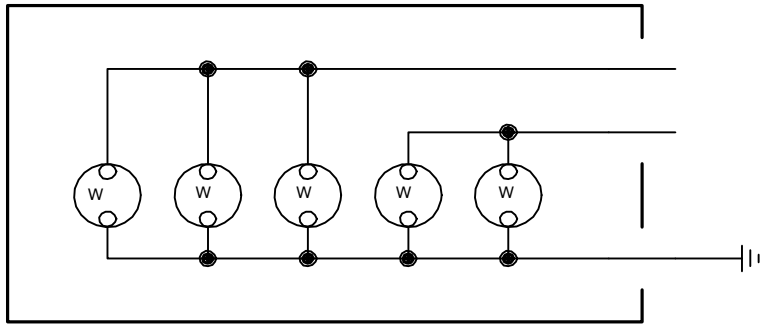

FASTEN SEAT BELT NO SMOKING

Example

Figure 48 Resistors in Parallel

FOR TRAINING PURPOSES ONLY!

© Lufthansa Technical Training

Mixed Circuits

Priority Rules for Calculations

The rules for calculations of mixed circuits are as follows.

If there are resistors in series, but some resistors are in parallel, then the total resistance of the resistors in parallel is calculated first.

If there are some resistors in parallel, but two or more resistors are in series, then the total resistance of the resistors in series is calculated first.

Example 1

R_1 = 1000 Ω
R_2 = 2000 Ω
R_3 = 3000 Ω.

At first the total resistance of the resistors in parallel must be calculated.

R_2 in parallel to R_3 is:

$$\frac{R_2 \, x \, R_3}{R_2 \, + \, R_3} = 1200 \, \Omega$$

Then R_1 is added => R_{tot} = 2200 Ω

Example 2

R_1 = 1000 Ω
R_2 = 2000 Ω
R_3 = 3000 Ω.

At first the total resistance of the resistors in series must be calculated.

R_1 in series to R_2 is:

$R_1 + R_2$ = 3000 Ω

$$(R_1 \, + \, R_2) \, parallel \, R_3 \, = \, \frac{(R_1 \, + \, R_2) \, x \, R_3}{R_1 \, + \, R_2 \, + \, R_3} \, = \, 1500 \, \Omega$$

FOR TRAINING PURPOSES ONLY!

© Lufthansa Technical Training

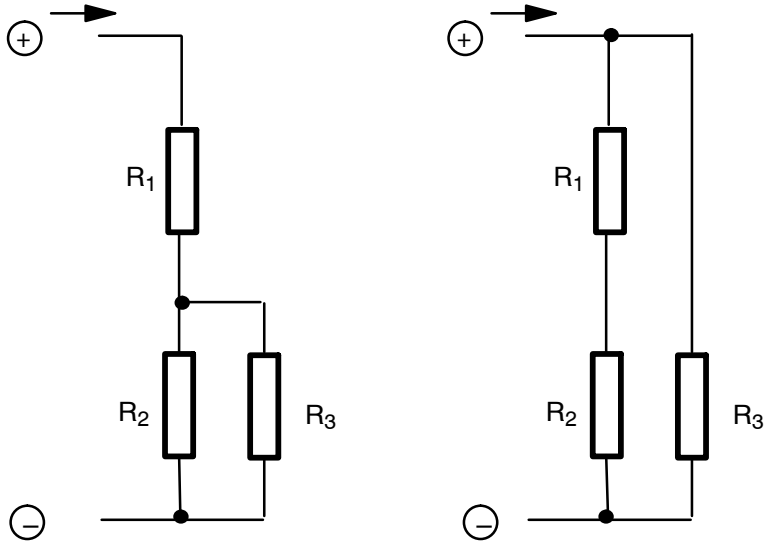

Figure 49 Examples of Mixed Circuits

FOR TRAINING PURPOSES ONLY!

© Lufthansa Technical Training

M3.6 DC CIRCUITS

KIRCHHOFF'S CURRENT LAW

Branch Points

In a parallel connection there are branch points, called nodes. At such points a current splits up according to specific principles.

For example, looking at node A the currents I_1 and I_2 flow into the node whereas currents I_3, I_4 and I_5 flow out of the node.

As it turns out, the currents flowing into the node have the same current value as the currents flowing out of the node.

$$I_1 + I_2 = I_3 + I_4 + I_5$$

Current Law

At any point in an electrical circuit, the sum of currents flowing towards that point is equal to the sum of currents flowing away from that point.

With the help of the current law, unknown currents in a node can be calculated.

FOR TRAINING PURPOSES ONLY!

© Lufthansa Technical Training

Current Branching

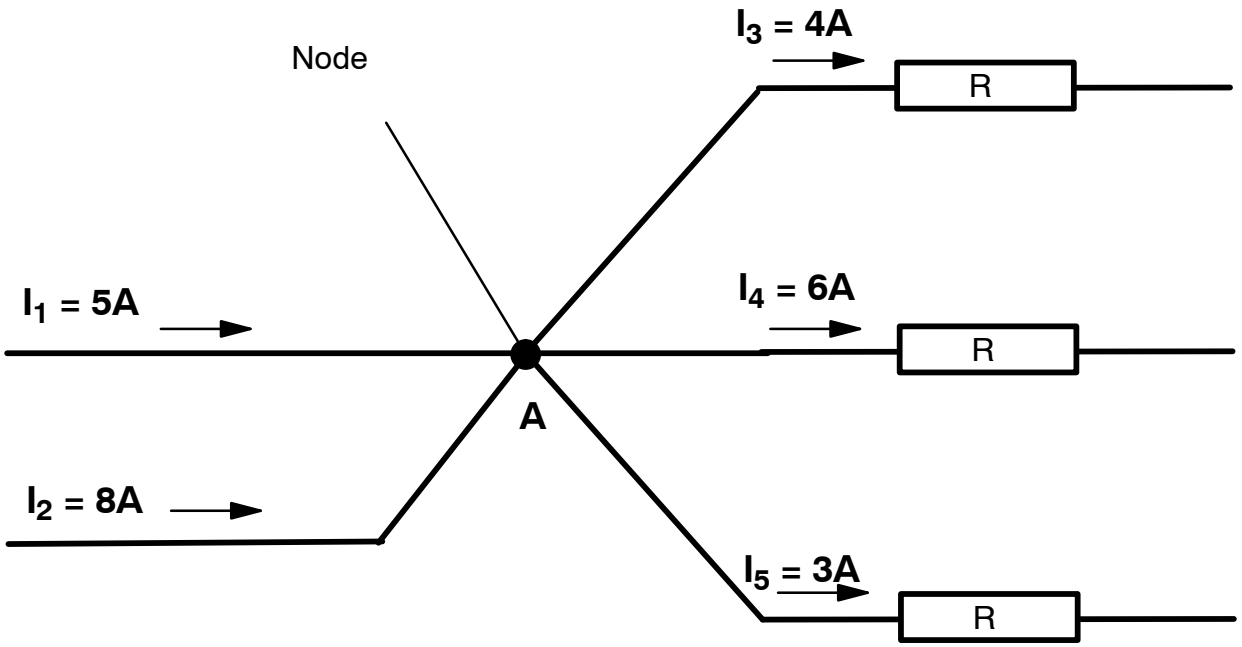

Figure 50 Kirchhoff's Current Law

FOR TRAINING PURPOSES ONLY!

© Lufthansa Technical Training

CALCULATIONS

Example 1

If 13 amperes flow away from point A through the wires 3, 4 and 5 and 8 amperes flow towards point A through wire 2, how many amperes flow through wire 1?

Now we use Kirchhoff's current law:

$$I_1 + I_2 = I_3 + I_4 + I_5$$

To get I_1, the term is as follows:

$$I_1 = I_3 + I_4 + I_5 - I_2$$

$$4\ A + 6\ A + 3\ A - 8\ A = \underline{\underline{5\ A}}$$

These 5 amperes flow towards point A.

Example 2

12 amperes flow towards a node.

4 wires lead away from the node. In one wire the current is 5 amperes, in the second wire it is 3 amperes and in the third wire there is no current.

What is the current in the fourth wire?

$$I_{towards} = I_{away}$$

$$12\ A = 5\ A + 3\ A + 0\ A + x\ A$$

To get the current in the fourth wire, the term is as follows:

$$12\ A - 5\ A - 3\ A - 0\ A = x\ A$$

$$\underline{\underline{I = 4\ A}}$$

FOR TRAINING PURPOSES ONLY!

© Lufthansa Technical Training

Current Branching

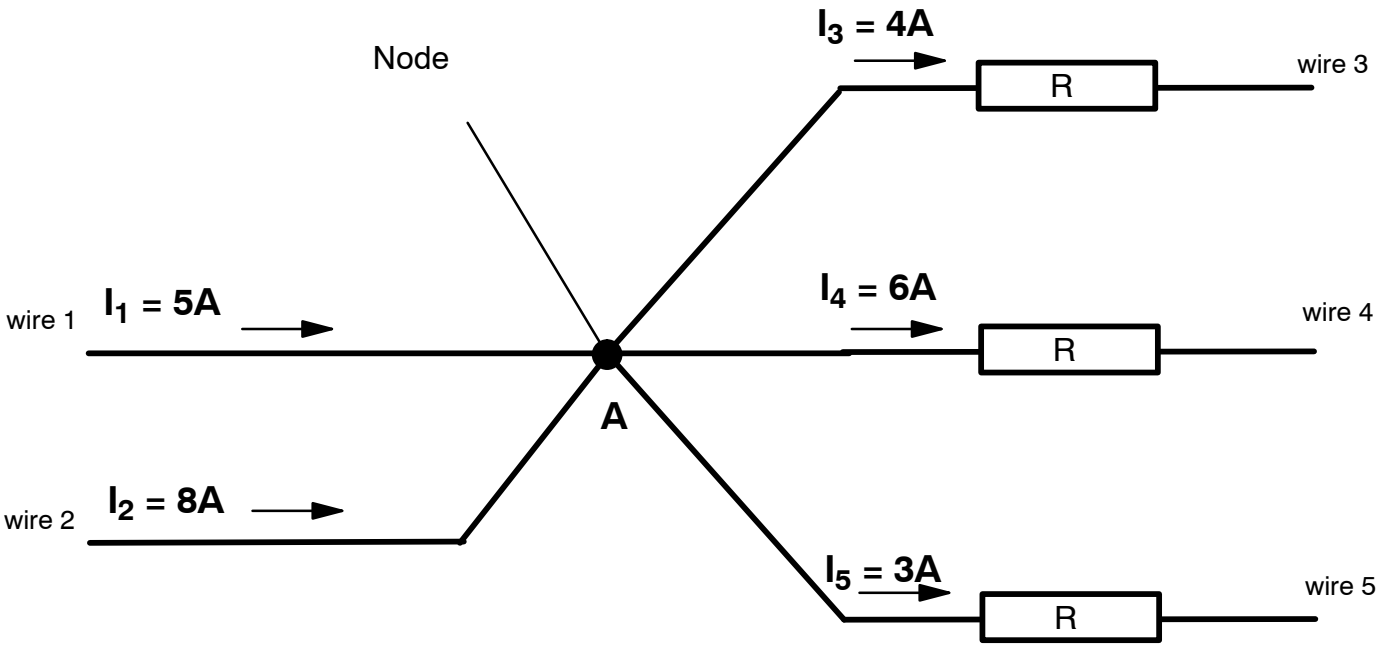

Figure 51 Kirchhoff's Current Law

FOR TRAINING PURPOSES ONLY!

© Lufthansa Technical Training

KIRCHHOFF'S VOLTAGE LAW

Electric Circuit

In a closed path in a circuit the voltage is divided among the resistors in series.

Example

The figure below shows an electrical circuit. It has two batteries: battery 1 and battery 2.

The voltages of the two power supplies (battery 1 with U_{B1} and battery 2 with U_{B2}) are added because they act in the same direction.

They cause one current I corresponding to the resistors R_1, R_2 and R_3.

Voltage Decrease

The current I causes a voltage decrease across the resistors R_1, R_2 and R_3.

When comparing the generated voltages with the voltage drops it becomes obvious that they are equal, i.e. all voltages are distributed within the whole circuit.

This voltage division leads to Kirchhoff's voltage law:

The sum of the voltage drops around a single closed path equals the sum of the voltage sources.

FOR TRAINING PURPOSES ONLY!

© Lufthansa Technical Training

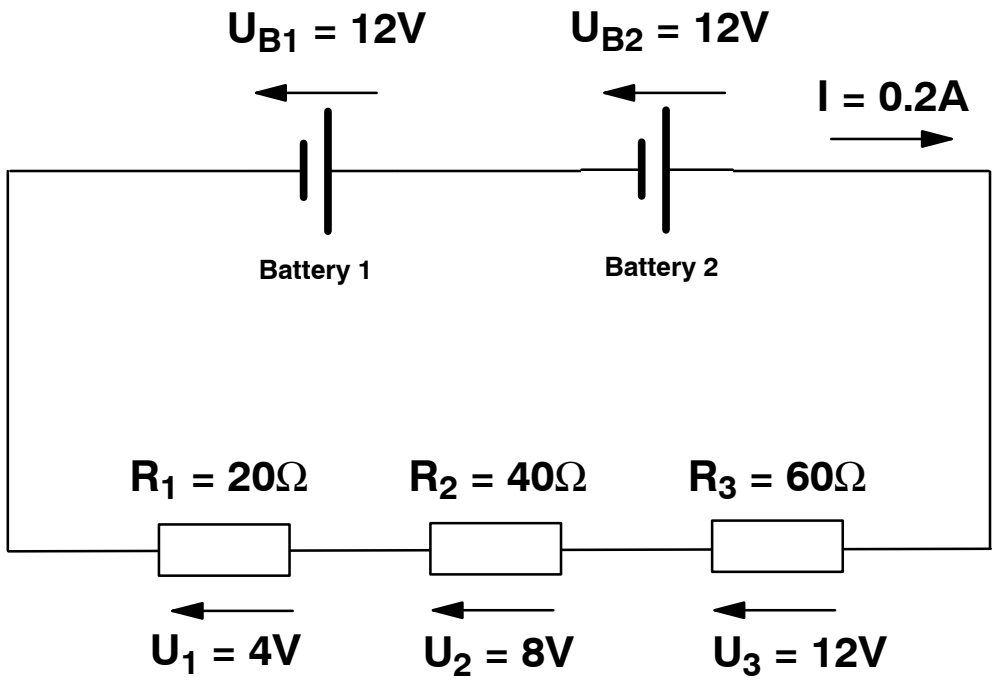

Figure 52 Kirchhoff's Voltage Law

FOR TRAINING PURPOSES ONLY!

© Lufthansa Technical Training

CALCULATIONS

Example 1

The current in an electrical circuit can be calculated by use of this formula:

$$I = \frac{U_{tot}}{R_{tot}}$$

In this example with two power supplies:

$$I = \frac{U_{B1} + U_{B2}}{R_1 + R_2 + R_3} = \frac{12V + 12V}{20\Omega + 40\Omega + 60\Omega} = 0,2A$$

Example 2

The voltage decrease across each of the resistors can be calculated when the current is known by multiplying current by resistance.

$U_1 = I \times R_1$; $U_1 = 0{,}2\ A \times 20\ \Omega =$ 4 V

$U_2 = I \times R_2$; $U_2 = 0{,}2\ A \times 40\ \Omega =$ 8 V

$U_3 = I \times R_3$; $U_3 = 0{,}2\ A \times 60\ \Omega =$ 12 V

Example 3

What is the voltage drop across R_2 when the voltage of the power sources battery 1 and battery 2 is known and the voltage drop across R_1 and R_3 is known?

The voltage of the sources is $U_{B1} + U_{B2}$.

12 V + 12 V = 24 V.

The voltage drop across R_1 and R_3 is $U_1 + U_3$.

Now we use Kirchhoff's voltage law:

$U_{B1} + U_{B2} = U_1 + U_2 + U_3$

To get U_2, the term is as follows:

$U_{B1} + U_{B2} - U_1 - U_3 = U_2$

12 V + 12 V − 4 V − 12 V = 8 V

Example 4

The total voltage drop across the electrical loads R_1, R_2 and R_3 is 24 volts.

What is the voltage of battery 2 if battery 1 provides 12 volts?

Now we use Kirchhoff's voltage law:

$U_{B1} + U_{B2} = U_1 + U_2 + U_3$

To get U_{B2}, the term is as follows:

$U_{B2} = U_1 + U_2 + U_3 - U_{B1}$

4 V + 8 V + 12 V − 12 V = 12 V

Example 5

Two resistors are connected in series. There is one generator as a power source.

The voltage drop across one resistor is 100 volts. The voltage drop across the other resistor is 20 volts.

What is the voltage which is supplied by the generator?

To get the voltage of the power source, the voltage drop across the resistors is added.

100 V + 20 V = 120 V

FOR TRAINING PURPOSES ONLY!

© Lufthansa Technical Training

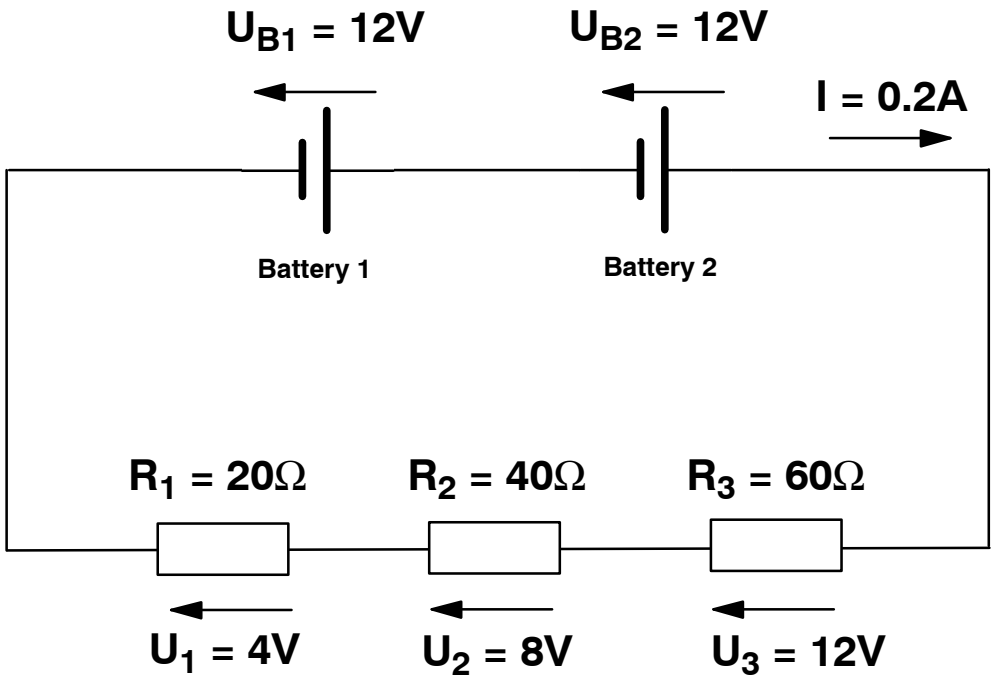

Figure 53 Kirchhoff's Voltage Law

FOR TRAINING PURPOSES ONLY!

© Lufthansa Technical Training

M3.7 RESISTANCE / RESISTOR

WHEATSTONE BRIDGE

Purpose

A Wheatstone Bridge is a type of electrical scale.

It compares the ”weight” (resistance) of two resistors.

Construction

A Wheatstone Bridge consists of two series connections in parallel.

A power source and a voltmeter are needed. The voltmeter has zero in the mid position of its scale.

The voltage at point (a) depends on the ratio of R_1 and R_2, the voltage at point (b) depends on the ratio of R_3 and R_4. If both ratios are the same the voltage measured between (a) and (b) is ZERO. We say the bridge is balanced.

Balance condition is: $\frac{R_1}{R_2} = \frac{R_3}{R_4}$

Operation

In Wheatstone Bridges ratios of resistors are compared. They are used to measure very small deviations with a very sensitive voltmeter.

The resistor to be measured is placed in position of one of the four resistors. Then the other three resistors are replaced by other resistors which have known values until the voltmeter shows zero.

If the voltmeter shows zero, the balance condition is given.

With the known values of the three resistors and formula the value of the unknown resistor can be calculated.

Use of Potentiometer

Sometimes R_1 and R_2 are replaced by a potentiometer. This is a common method of determining the resistance of unknown resistors. The scale must have the corresponding readings then.

FOR TRAINING PURPOSES ONLY!

© Lufthansa Technical Training

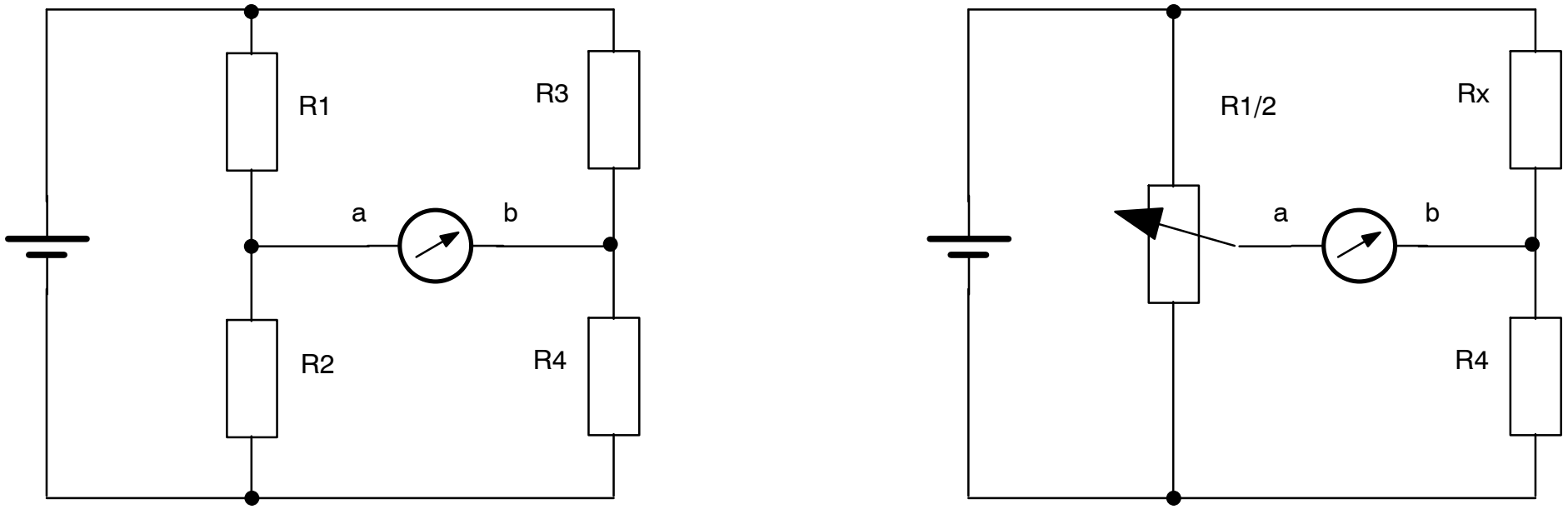

Figure 54 Wheatstone Bridge

FOR TRAINING PURPOSES ONLY!

© Lufthansa Technical Training

M3.5 DC SOURCES OF ELECTRICITY

INTERNAL RESISTANCE

General

Every battery contains plates and an acid which has a certain resistance.

The same principle applies to generators, they contain copper windings having a certain resistance.

The influence of these materials contained is called Internal Resistance R_i.

Source Voltage

A power source (e.g. battery or generator) generates a voltage, the so–called source voltage U_0. This voltage is conducted through the internal resistance to the terminals of the power source.

Terminal Voltage

Due to the internal resistance of the power source, not the total source voltage is available at the terminals, but only the so called terminal voltage U as the load is always in series with the internal resistance.

Hence the laws of series connections apply.

Open Circuit Operation

In a voltage generator operating off–load (open–circuit operation) no current flows and, therefore, the terminal voltage U is the same as the source voltage U_0.

On-Load Operation

In a voltage generator operates on–load or in other words if current flows (increasing current flow) the terminal voltage decreases. The terminal voltage decreases at a higher current, because the internal voltage drop across the generators internal resistance increases. So this happens because the power sources have an internal resistance, R_i.

Calculations

In order to determine the behavior of a generator in an electric circuit, the internal resistance is added as a schematic symbol in the circuit diagram. The result is the equivalent circuit of the generator, i.e. the representation in a simplified electric circuit.

Short–Circuit Current

If the terminals of the battery are short–circuited, i.e. they are directly connected to each other, a high current flows in the circuit, the so called short–circuit current I_K.

The short circuit current is only limited by the internal resistance of the battery. The total source voltage drops at the internal resistance.

The internal resistance of many power sources is very low, which can cause very high short circuit currents. These currents would quickly destroy the power source.

Voltage Regulation

To achieve a reasonably stable terminal voltage when there are load variations, the choice and combination of power sources is important (voltage adjustment and current adjustment).

A power supply unit, for instant, contains additional components such as voltage regulators and load resistors. These components ensure a constant voltage and current which is necessary for electrical equipment.

FOR TRAINING PURPOSES ONLY!

© Lufthansa Technical Training

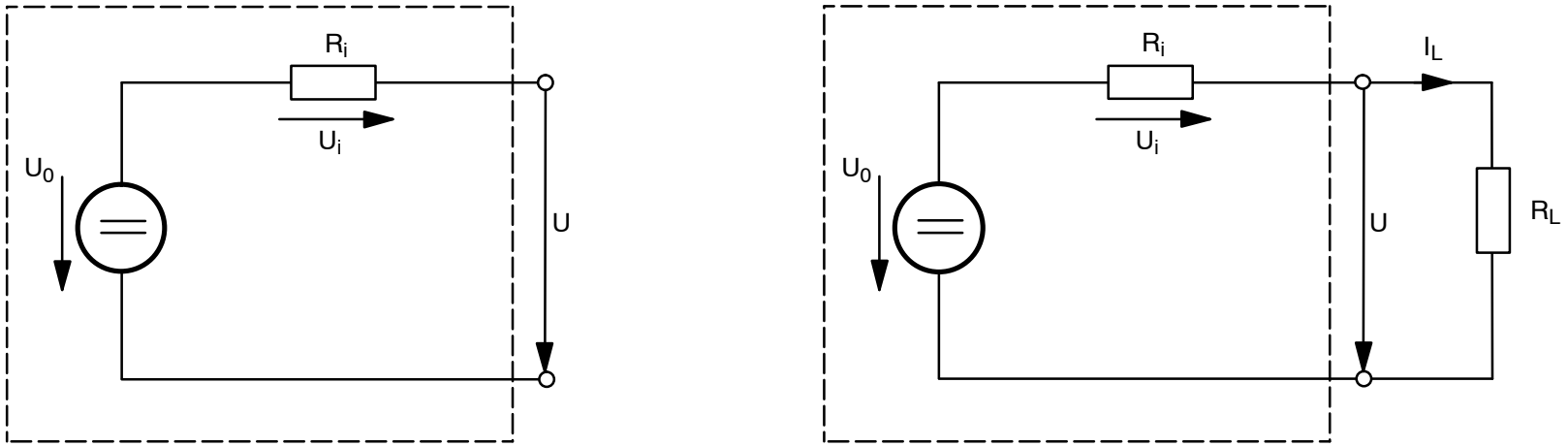

Figure 55 Internal Resistance of Voltage Sources

FOR TRAINING PURPOSES ONLY!

© Lufthansa Technical Training

Example 1

A voltage generator has an internal resistance of 1 kΩ. A load resistor of 4 kΩ is connected to the generator with a terminal voltage of 2 V.

What is the generated source voltage?

$$I = \frac{U}{R_L} = \frac{2V}{4k\Omega} = 0,5mA$$

$$U_{R_i} = R_i \times I = 1k\Omega \times 0,5mA = 0,5V$$

$$U_0 = U + U_{R_i} = 2V + 0,5V = 2,5V$$

The terminal voltage V is equivalent to the generated voltage V_0 reduced by the voltage drop across the internal resistance

$$U = U_0 - U_{R_i} = U_0 - R_i \times I$$

Example 2

What voltage will be at the terminals if the load has a resistance of 1.5 kΩ?

$$R_{total} = R_i + R_L = 1k\Omega + 1,5k\Omega = 2,5k\Omega$$

$$I = \frac{U}{R_{total}} = \frac{2,5V}{2,5k\Omega} = 1mA$$

$$U_{R_i} = R_i \times I = 1k\Omega \times 1mA = 1V$$

$$U_{R_L} = R_L \times I = 1,5k\Omega \times 1mA = 1,5V$$

Example 3

What is the maximum current (short circuit)?

$$I_{max} = \frac{U}{R_i} = \frac{2,5V}{1k\Omega} = 2,5mA$$

Influence of the internal resistance of a power source:

As mentioned earlier, the resistance of a power source is designated as internal resistance (R_i).

The size of the internal resistance depends on the type of power source. The internal resistance of a battery cell, for example, is 0.01 Ω. The voltage between the terminals of a power source depends on the size of the internal resistance and the current.

Resistance of Wires

The resistance of connecting wires has the same effect as the internal resistance of the power source: it reduces the voltage available for the load.

Contact Resistance

Junctions between wires or wire-power source can reduce the voltage available for the load as the current has to be transferred from one device to another. This is what we call Contact Resistance.

It should be as low as possible because it reduces the voltage available for the workload applied.

As the terminals of a battery are intended to give contact to the circuit attached the terminals must be kept clean avoiding the contact resistance.

FOR TRAINING PURPOSES ONLY!

© Lufthansa Technical Training

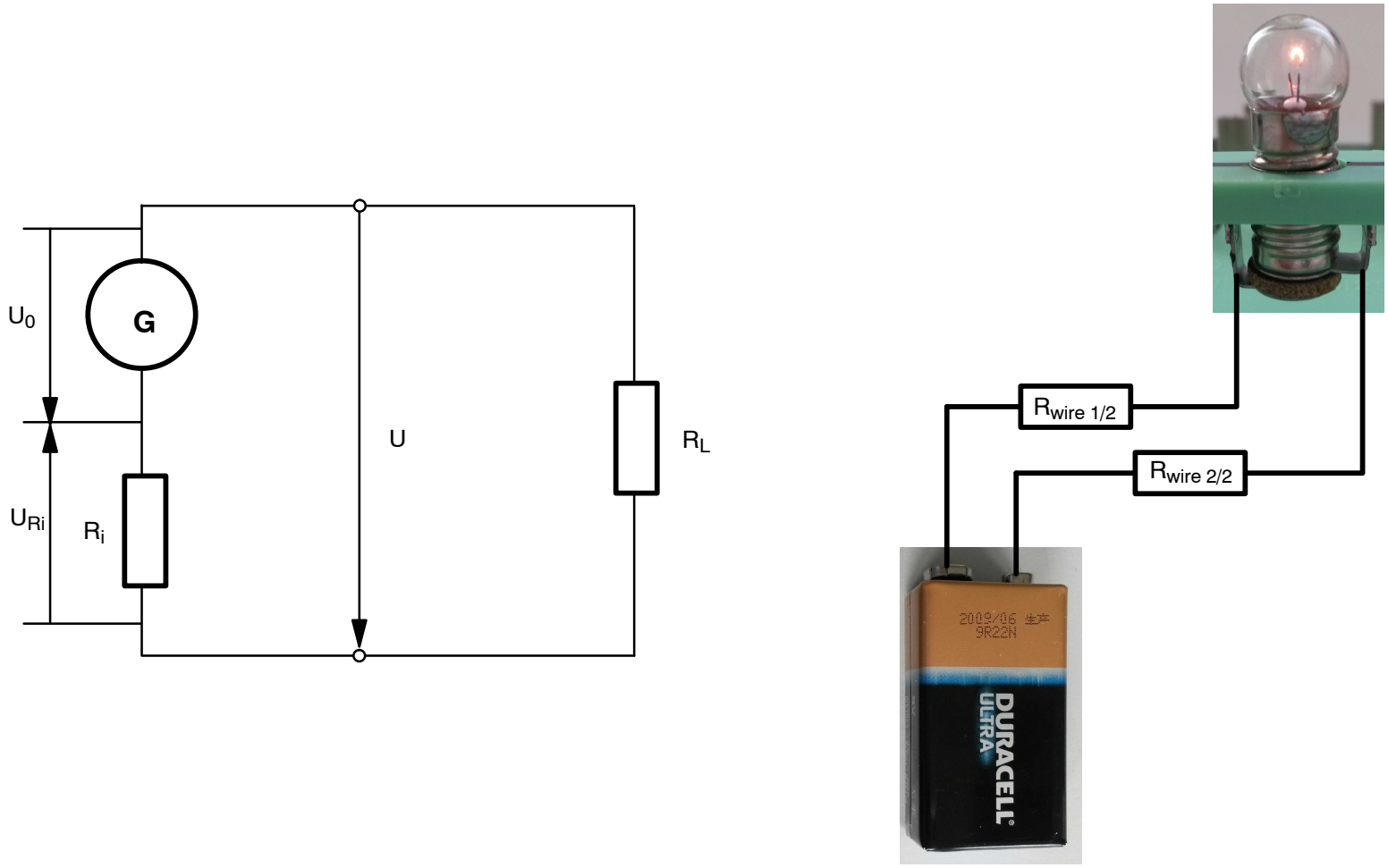

Figure 56 Internal Resistance and Resistance of Conducting Wires

FOR TRAINING PURPOSES ONLY!

© Lufthansa Technical Training

POWER SOURCES IN PARALLEL

General

If like terminals of power sources are connected to each other, a parallel connection is created.

Parallel connection of power sources is applied if the required current exceeds the permitted load of a single power source (overload).

For this reason generators in power plants are connected in parallel.

Batteries

Batteries can be connected in parallel to increase the total capacity.

Voltage

Connecting unlike power sources in parallel causes an unintended circulating current. Therefore, all power sources which are connected in parallel must have the same voltage.

Advantage

By connecting like power sources in parallel the voltage remains constant, but the current in the power sources decreases, i.e. the total current carrying capacity increases.

Summary

The characteristics of power sources in parallel are as follows:

- The total current is the sum of the individual currents.
- The total resistance is lower than the lowest individual resistance.
- The voltage across parallel branches is constant.

Example

If switch 1 is operated, a current of I_2 = 2 A flows through the power source.

If both switches are operated, a current of 1 A flows through each of the two power sources.

The total current is 2 A for both power sources. The total voltage is 2 V.

FOR TRAINING PURPOSES ONLY!

© Lufthansa Technical Training

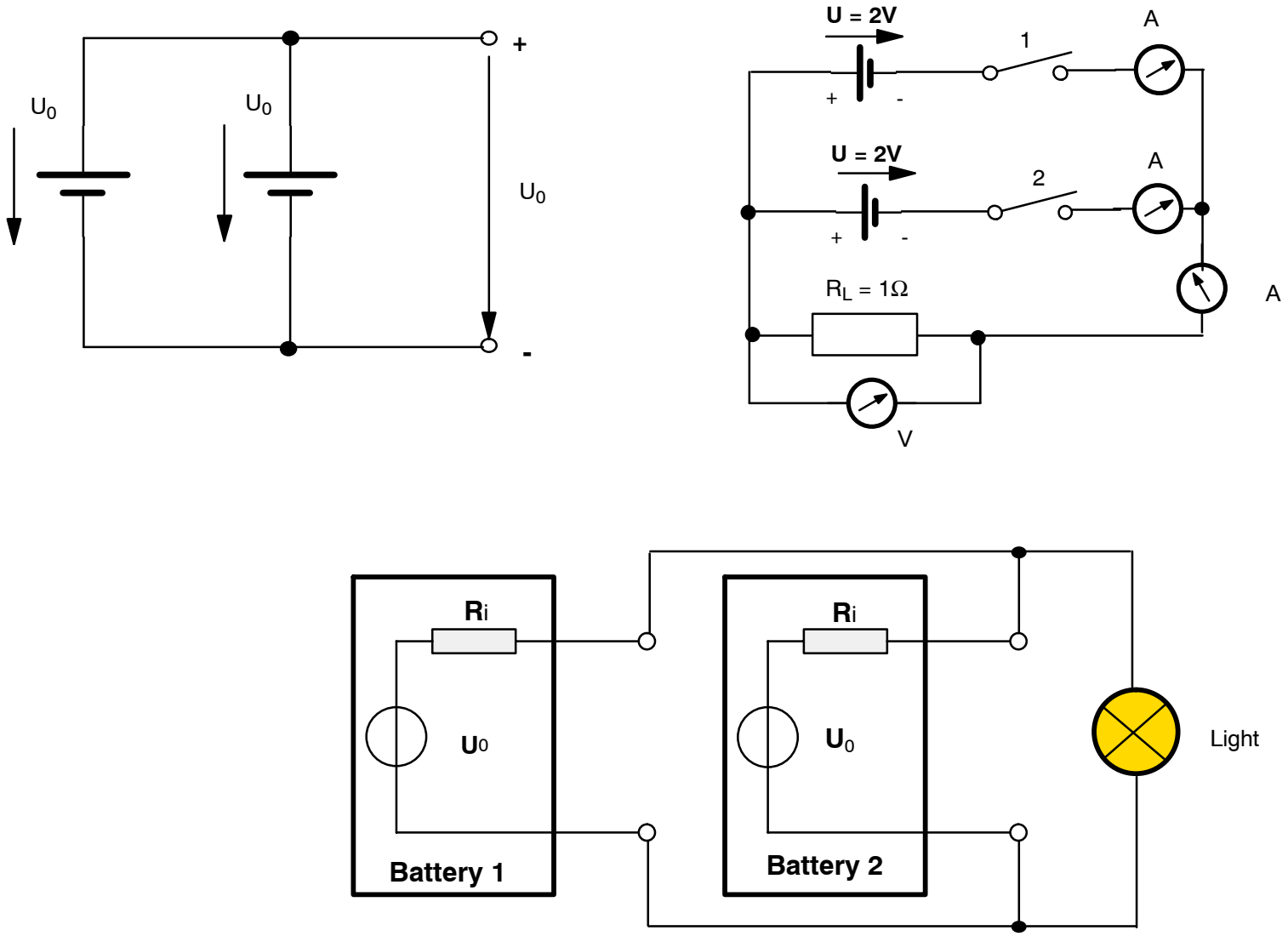

Figure 57 Batteries in Parallel

FOR TRAINING PURPOSES ONLY!

© Lufthansa Technical Training

POWER SOURCES IN SERIES

General

Generally spoken, if power sources or so called cells are connected in series, parallel or in both, a battery is created.

Connecting unlike terminals of power sources will create a series connection.

Voltage

Voltage measurements can easily prove that the total voltage is the sum of the voltages of all individual [circuit] components.

Advantage

The series connection of power sources increases the voltage.

Total Resistance

The total resistance of a battery is equivalent to the sum of the internal resistances of all individual components. Therefore a series connection increases the total resistance.

On-Load Operation

For a battery with a workload the internal resistance acts on the current, according to the resistance value. Internal Resistance and load are in a series connection.

This results in a reduction of output voltage of the battery if a load is applied.

Restrictions

The current across a series circuit is constant, i.e. the current carrying capacity must be the same in each cell!

FOR TRAINING PURPOSES ONLY!

© Lufthansa Technical Training

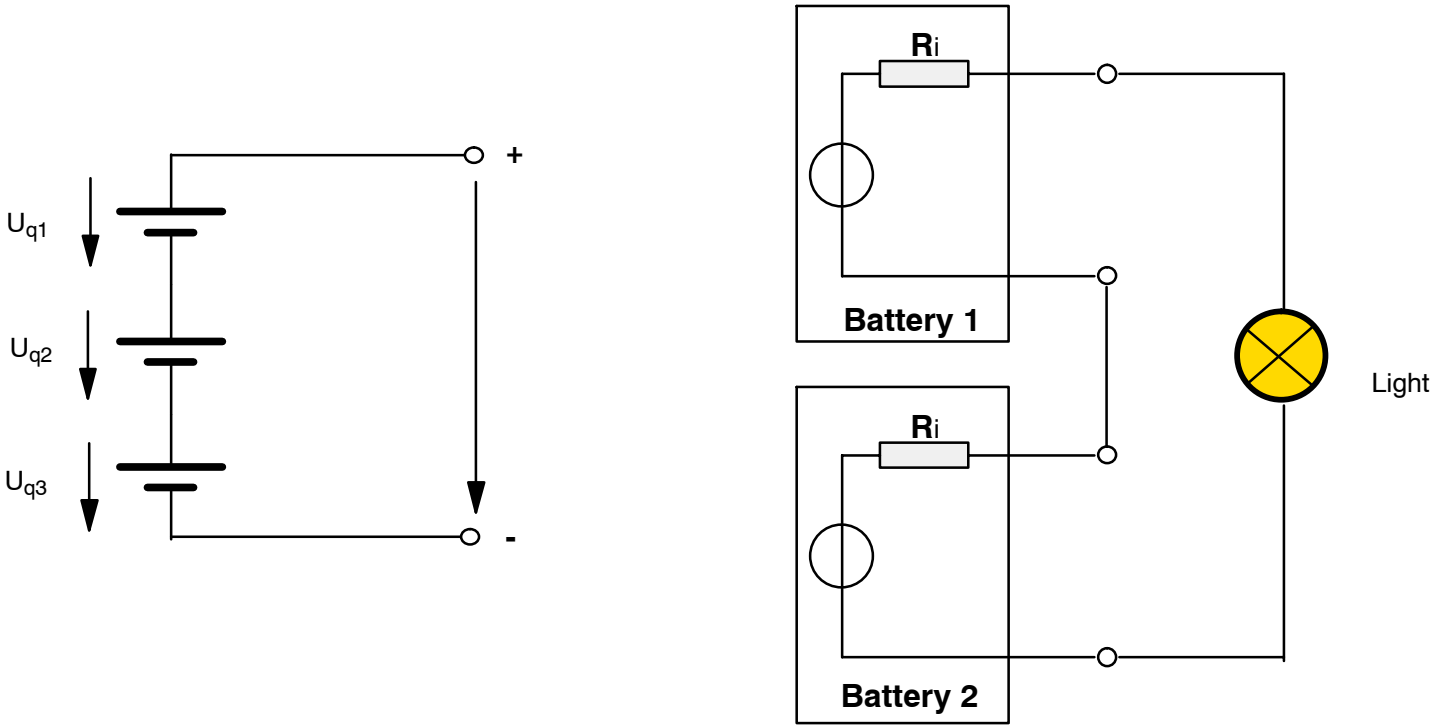

Figure 58 Batteries in Series

FOR TRAINING PURPOSES ONLY!

© Lufthansa Technical Training

M3.8 POWER

ELECTRICAL POWER

General

Power is the rate at which work is performed. For calculations in circuits electrical power is important. It indicates the amount of energy per time converted to, for example, heat (stove) or propulsive output (engine).

Power is an instantaneous value at the time of measurement. Nothing is said about the total energy consumption (e.g. over 1 hour).

The nameplates of electrical appliances (e.g. electric motors, coffee machines) basically include the power rating. This is the average value over a particular period of time. With AC voltage it is necessary to determine the average value, with DC voltage the power is constant at any time.

If the current is 1 Ampere and the voltage 1 Volt, the converted power is 1 Watt.

Symbol for Quantity and Unit

The symbol for power is P .

Power is measured in watts (W).

Formula

$$P = U \times I$$

If you reduce the voltage by half, you obtain a quarter of the power.

If you double the voltage, you obtain four times the power.

Calculation without Current

If the resistance is known, the power can also be calculated without a given current

$$P = U \times I \text{ and } I = \frac{U}{R}$$

I can be replaced by $\frac{U}{R}$:

$$P = U \times \frac{U}{R} = \frac{U^2}{R}$$

Calculation without Voltage

The power can also be calculated without a given voltage:

$$P = U \times I \, und \, U = I \times R$$

U is replaced by I x R:

$$P = I^2 \times R$$

Measuring

There are two different ways of measuring the electrical power:

- Using a wattmeter:

  This is a special meter which is a combination of a voltmeter and an ammeter in one housing. It does the multiplying automatically; the indication is in Watts.

  This is known as **direct measurement**.
- Measuring voltage and current with a voltmeter and an ammeter:

  Two separate measurements have to be carried out. The results have to be multiplied manually.

  This method of measuring is referred to as **indirect measurement** of the power.

FOR TRAINING PURPOSES ONLY!

© Lufthansa Technical Training

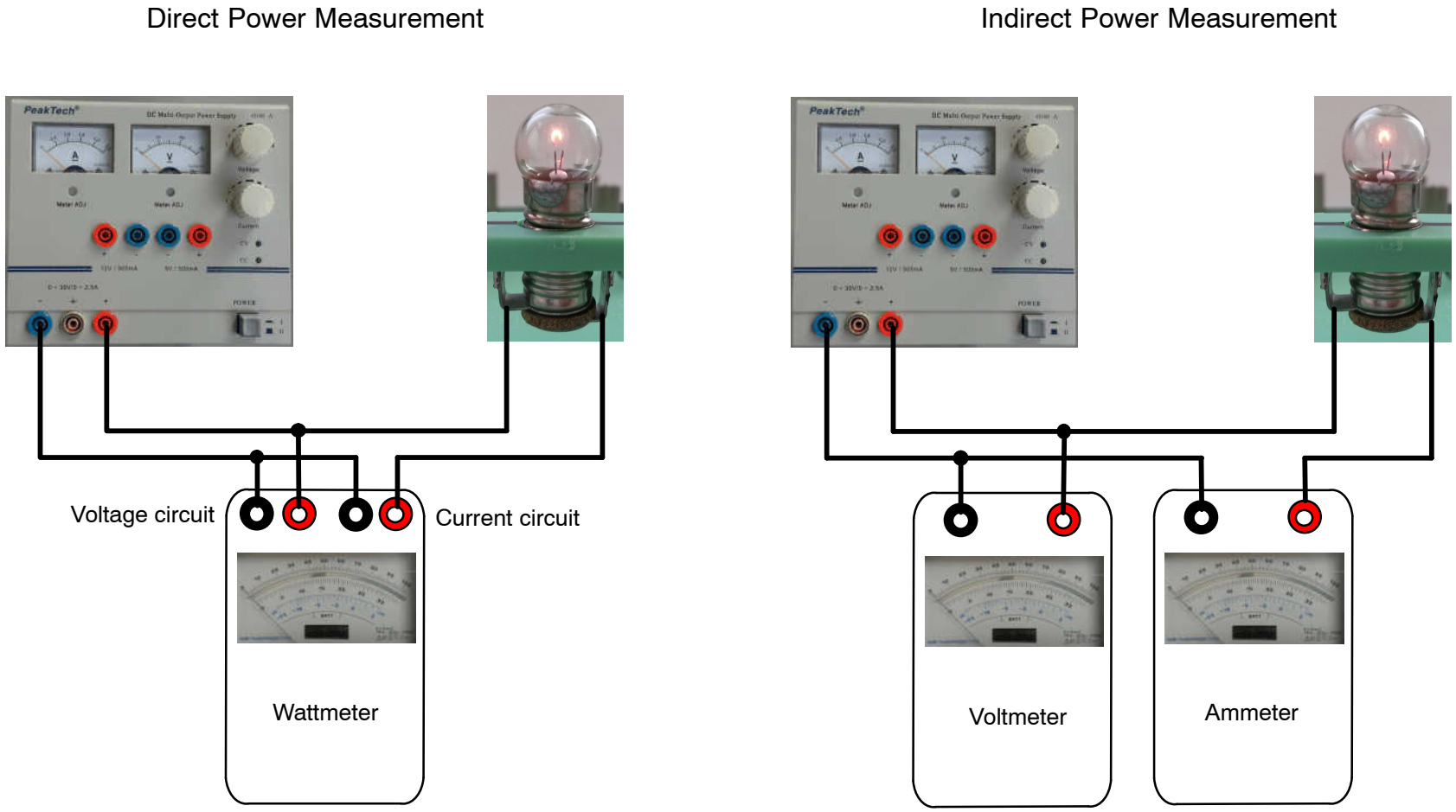

Figure 59 Measurement of Power

FOR TRAINING PURPOSES ONLY!

© Lufthansa Technical Training

POWER DISTRIBUTION

Power Distribution in Series Arrangements

If two or more resistors are connected in series both will have the same current, as already discussed.

Also has been discussed that the individual voltage of a resistor depends on the ratio of the resistors.

The larger the resistance the larger the voltage.

Since the power is voltage times current the resistor with the higher resistance will have the higher power dissipation.

As you can see from the picture below the power dissipation for R_1 is:

$$P = U \times I = 7V \times 1A = 7W$$

For R_2 it is:

$$P = U \times I = 21V \times 1A = 21W$$

Power Distribution in Parallel Arrangements

If two or more resistors are connected in parallel all will have the same voltage.

The individual current depends on the resistance.

The higher the resistance the lower the current will be.

Since the power is voltage times current the resistor with the higher resistance will have the lower power dissipation.

As you can see from the picture below the power dissipation for R_1 is:

$$P = U \times I = 28V \times 4A = 112W$$

For R_2 it is:

$$P = U \times I = 28V \times 1.333A = 37.3W$$

FOR TRAINING PURPOSES ONLY!

© Lufthansa Technical Training

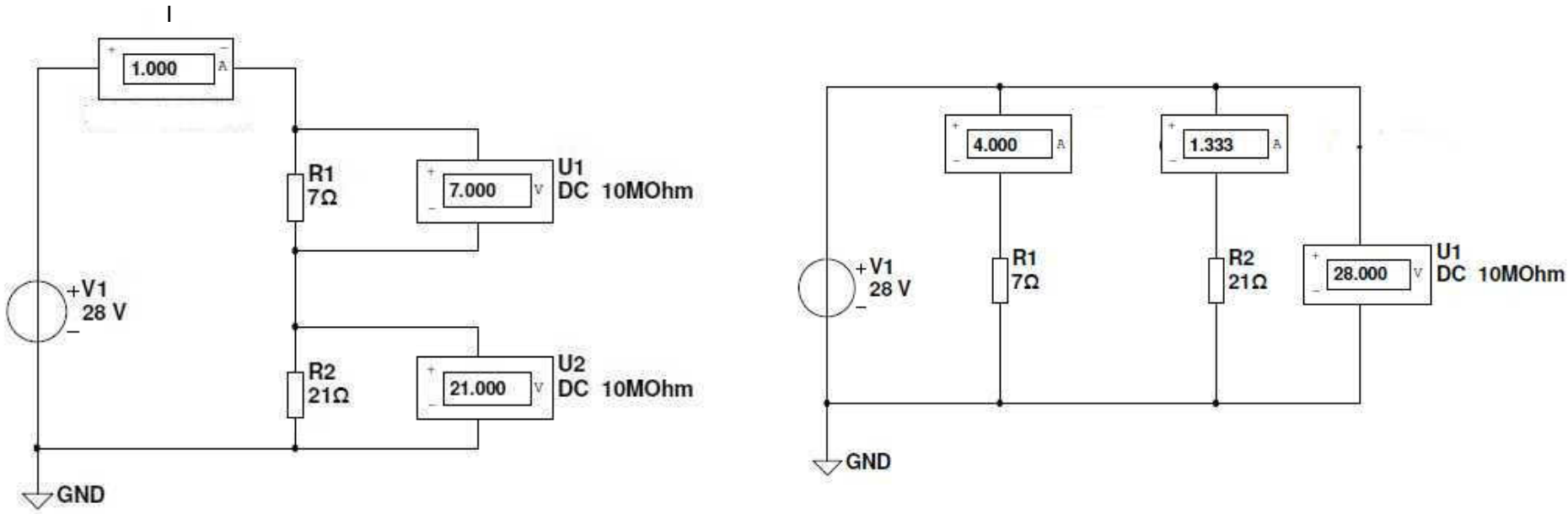

Figure 60 Power in Series and Parallel Connections

FOR TRAINING PURPOSES ONLY!

© Lufthansa Technical Training

CALCULATIONS

Example 1

Assume a hair dryer for 230 V has a current consumption of 4 A.

What is the power?

Its power is 230 V × 4 A = 920 W

Example 2

What happens if the hair dryer is operated in the USA (115 V)?

Since the voltage is cut down by half, (according to Ohms' Law) the current also has to be cut down by half:

P = 115 V x 2 A = 230 W

Example 3

A lamp has four light bulbs. They have a power consumption of 75 watts each.

The voltage is 230 volts.

What is the current in the lamp?

$$P = U \times I$$

To get I, the term is as follows:

$$I = \frac{P}{U}$$

Ptot = 300 W

$$I = \frac{300W}{230V} = 1,3A$$

FOR TRAINING PURPOSES ONLY!

© Lufthansa Technical Training





Figure 61 Electrical Loads

FOR TRAINING PURPOSES ONLY!

© Lufthansa Technical Training

ELECTRICAL EFFICIENCY

General

The efficiency is a measurement of how good a machine converts energy from one form to another.

Example

With regard to a motor, electrical energy is supplied to it and mechanical energy is delivered. Hence the motor converts electrical energy into mechanical energy.

This is expressed as **efficiency** η (eta).

Formula

The efficiency describes the ratio of energy output divided by the energy input. In other words it describes the percentage of the supplied energy which is converted into usable energy.

$$\eta = \frac{P_{out}}{P_{in}}$$

The efficiency can either be expressed as a percentage or as a factor (without a unit).

Principle of Energy Conservation

According to the principle of energy conservation (Physics) energy cannot be lost. Thus the energy that cannot be used has to be converted to another energy form, which is mostly heat.

Maximum Efficiency

Since a machine can NEVER deliver more energy than supplied to it, the efficiency can never exceed 1 (100 %)!

Common Values

Common values of efficiency are:

- Electric Motor: 80 % - 90 %
- Diesel-Engine: 50 % -60 %
- Petrol-Engine: 40 % - 50 %
- Aircraft-Engine (Turbine): 30 % - 40 %
- Light bulb: 5 %
- Loudspeaker: 2 %

Example

An electric motor has a power consumption of 1000 W (according to the nameplate) and the efficiency is 80 %.

Therefore the power delivered at the shaft is:

1000 W x 0,8 = 800 W

FOR TRAINING PURPOSES ONLY!

© Lufthansa Technical Training

Efficiency



$$\eta = \frac{P_{out}}{P_{in}} \leq 1$$

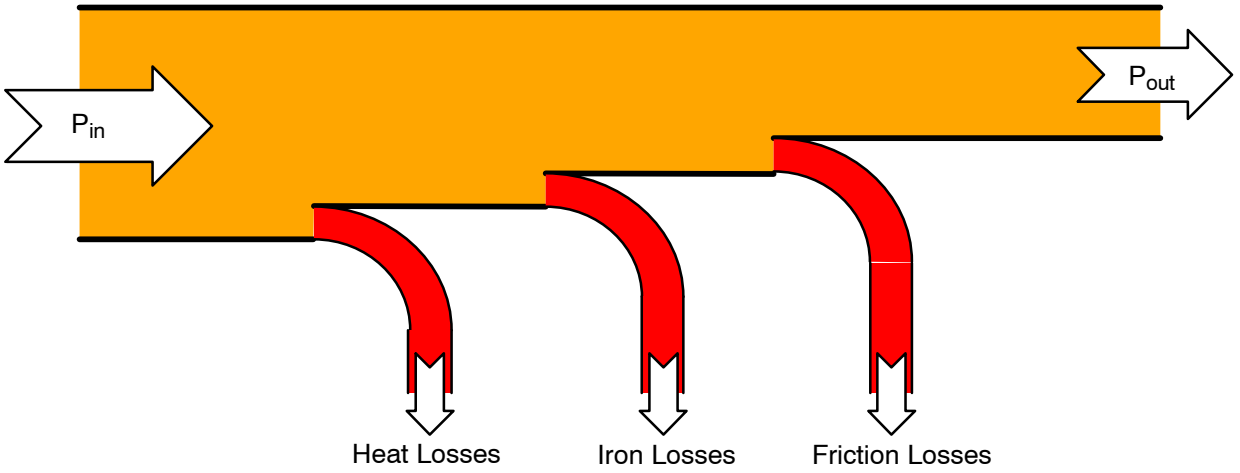

Figure 62 Efficiency of a Motor

FOR TRAINING PURPOSES ONLY!

© Lufthansa Technical Training

ENERGY

General

Energy is stored nearly everywhere in nature. For example, if wood is burned, the energy stored in the wood is transformed into heat. Energy can be stored in several ways. In mechanics two forms are used

- kinetic energy
- potential energy

These two forms of energy are common to electricity, too.

Kinetic Energy

Kinetic energy is the energy of movement. This means that everything that moves has energy stored in its motion. It can be calculated:

$$W = \frac{1}{2}mv^2$$

Where W is the energy, m is the mass and v is the velocity. Hence the energy stored depends on both mass AND speed.

Example 1

A aircraft passenger's mass is 100 kg. The speed of the aircraft is 900 km/h. Converted to m/s this equals 250 m/s.

$$W = \frac{1}{2}mv^2 = \frac{1}{2} \times 100\text{kg} \times (250\text{m/s})^2 = 3125\text{kNm}$$

If the speed is halved during the approach at the airport the energy will only be 1/4.

Example 2

A aircraft passenger's mass is 100 kg. The speed of the aircraft is 450 km/h. The speed has to be converted to m/s ⇒ 125 m/s

$$W = \frac{1}{2}mv^2 = \frac{1}{2} \times 100\text{kg} \times (125\text{m/s})^2 = 781.25\text{kNm}$$

Kinetic energy is stored in the electrons whilst current flows (flow of electrons).

Potential Energy

Potential energy is the energy depending on position. If for example a pen is picked up and lifted 1 m the pen has gained some potential energy. When lifting the pen, energy is added to the pen. If the pen is dropped it gives the energy back as it falls.

The potential energy can be calculated like this:

$$W = m \times g \times h$$

Where m is the mass, g is the acceleration from gravity (9,81 m/s^2) and h is the height.

Example 3

A passenger's mass is 100 kg. If the airplane flies at an altitude of 10,000 m, how much energy is stored in the passenger's body?

$$W = m \times g \times h = 100\text{kg} \times 9,81\frac{\text{m}}{\text{s}^2} \times 10.000\text{m} = 9.81\text{MNm}$$

Potential energy is stored in electrons if there is a voltage (separation of charges).

FOR TRAINING PURPOSES ONLY!

© Lufthansa Technical Training

ELECTRICAL WORK

General

Work has the same letter and unit as energy. So it is nearly the same. The only difference is: Work is a change in stored energy.

This means that when passengers are just standing on the ground they do no store kinetic energy. As the airplane climbs to 10,000 m it performs work. When the climb is finished, the passengers haves gained 9.81 MNm of (potential) energy stored in their bodies.

Symbol for Quantity and Unit

The symbol for work is W .

Work is measured in watt hours (Wh).

Formula

Electrically this means that the electrical work is the voltage (altitude difference) multiplied by the charge (weight).

$$W = U \times Q$$

or

$$W = U \times I \times t$$

W = work

U = voltage

Q =charge.

Power

The faster the plane climbs to 10,000 m the more power is needed.

$$W = P \times t$$

Hence power is the rate at which work is done OR work is power over a certain period of time.

Equivalent units are:

- J (Joule)
- Ws (Watt-Second)
- Nm (Newton-Meter).

CALCULATIONS

Example 1

The operating time of a motor with 12 Amperes at a voltage of 110 Volts is 2000 h/year.

What is the price of energy at 20 Cent/kWh?

W = U × I × t = 110 V × 12 A × 2000 h = 2640 kWh

1 kWh ≙ 20 Cent

2640 kWh = 0.20 € x 2640

Energy costs = 528 €/Year

Example 2

An old washing machine heats the water with 2 000 watts within 5 minutes and then starts the motor for rotating.

A new washing machine works with less power. It heats the same amount of water with only 1 000 watts within 10 minutes.

Which machine needs less energy for the heating?

Which machine saves money for electrical energy?

5 minutes are 300 seconds

W_{old} = 2 000 W × 300 s = 600 000 Ws = 167 Wh

W_{new} = 1 000 W × 600 s = 600 000 Ws = 167 Wh

With half the power and double the time the work is the same. The costs for energy are the same, too.

FOR TRAINING PURPOSES ONLY!

© Lufthansa Technical Training

M3.9 CAPACITANCE / CAPACITOR

THE ELECTRIC FIELD

General

Bodies that carry an electrical charge may apply a force on other charged bodies. The negatively charged electrons of an atom are attracted by the positive protons inside the nucleus.

A electric field exists around every electrically charged body.

Forces

Electrically charged bodies have a force on each other.

This force is higher the more charges are involved and the smaller the distance between the charges is.

Coulomb's Law

The force applied to charges can be calculated by using Coulomb's Law:

$$F = k \times \frac{Q_1 \times Q_2}{d^2}$$

where

k is a material-dependant factor

Q is the amount of charges and

d is the distance between the charges.

The force can be made visible when charging two pendant pithballs with a rod, as shown below. It will be discovered that like bodies repel while unlike bodies attract.

The lines of force run from the positive charged body to the negative one. The density of the lines shows the strength of the electrical field: the higher the density of lines the stronger the field.

The lines of force extend in all directions from the charged body and terminate where there is an opposite charge.

Electric Field Intensity

The field strength between two bodies depends on the voltage V (potential difference) between two bodies and the distance d between them.

Symbol for Quantity and Unit

The symbol for electric field intensity is E .

Power is measured in volts per meter (V/m).

Formula

$$E = \frac{F}{q}$$

With:

- E = electric field intensity
- F = Force between the two bodies
- q = is a constant test charge

FOR TRAINING PURPOSES ONLY!

© Lufthansa Technical Training

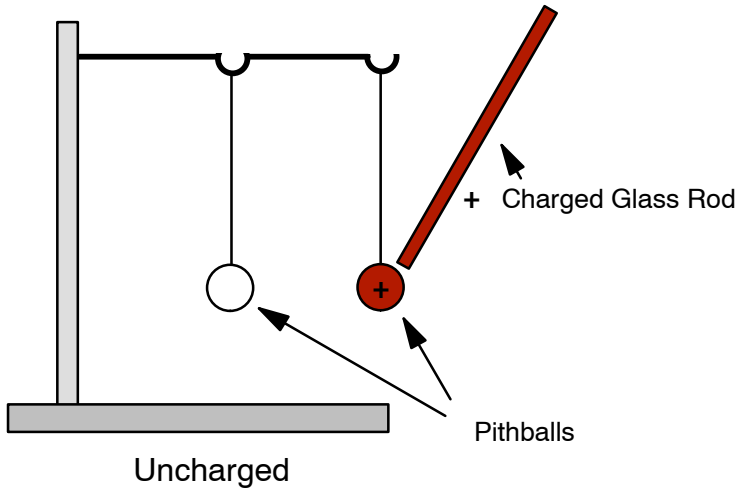

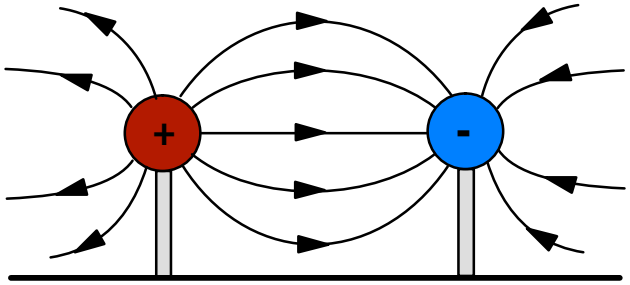

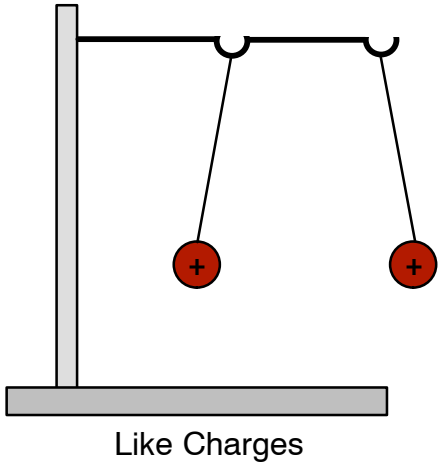

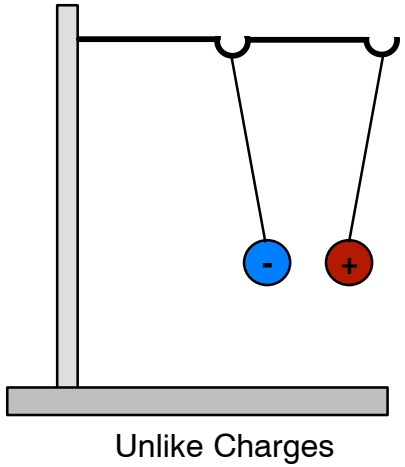

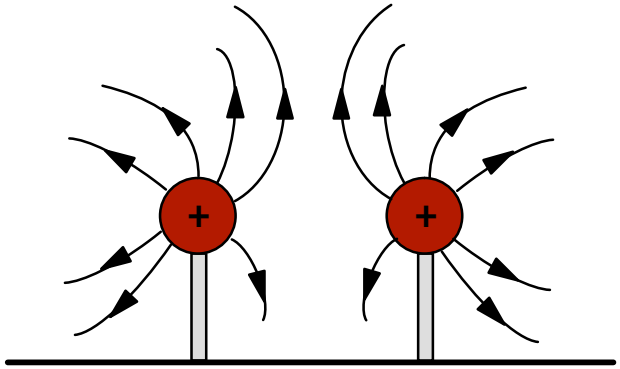

Figure 63 Electrical Charges Forces

FOR TRAINING PURPOSES ONLY!

© Lufthansa Technical Training

CAPACITORS

General

A capacitor is a storage device for electrical energy.

In contrast to battery or accumulator electrical fields are used instead of chemical action.

The basic principle is to apply / remove electrons to / from the plates resulting in a voltage between the plates. The capacitor becomes charged.

During discharge the separation of charges is lifted so the energy stored is given back to the electric circuit.

Capacitors are components that have a certain desired capacitance. Usually they consist of two metal plates or metal foils that are isolated from each other by insulators.

The isolating materials used as a “dielectric“ increase the electric field intensity. They increase the charge and thus the capacitance.

Each material used for a dielectric has a particular dielectric constant.

An older word for capacitor is “condenser“.

Capacitance

If a voltage is applied to two opposite plates, the plates are charged (see electric field). The amount of charge depends on the plate size, the distance between the plates and on the applied voltage. The absorbed charge is proportional to the applied voltage

(Q ~ U).

This quantity is referred to as capacitance.

Capacitance is the proportional factor between Q and U:

$Q = C \times U$

Symbol for Quantity and Unit

The symbol for capacitance is C .

Capacity is measured in Farad (F).

$$C = \left[\frac{As}{V}\right] = [F]$$

A capacitor has a capacitance of 1 Farad, if the current is 1 Ampere for a second at a voltage of 1 Volt.

Formula

The capacity depends on the three factors:

- Area of the plates
- Distance between the plates
- Dielectric

The influence of the plate sizes, the distance between the plates, and other design dependent factors are referred to as capacity.

It is calculated as follows:

$$C = \frac{\varepsilon \times A}{d}$$

FOR TRAINING PURPOSES ONLY!

© Lufthansa Technical Training

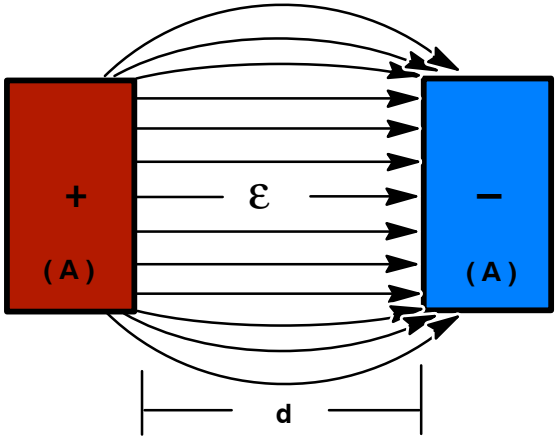

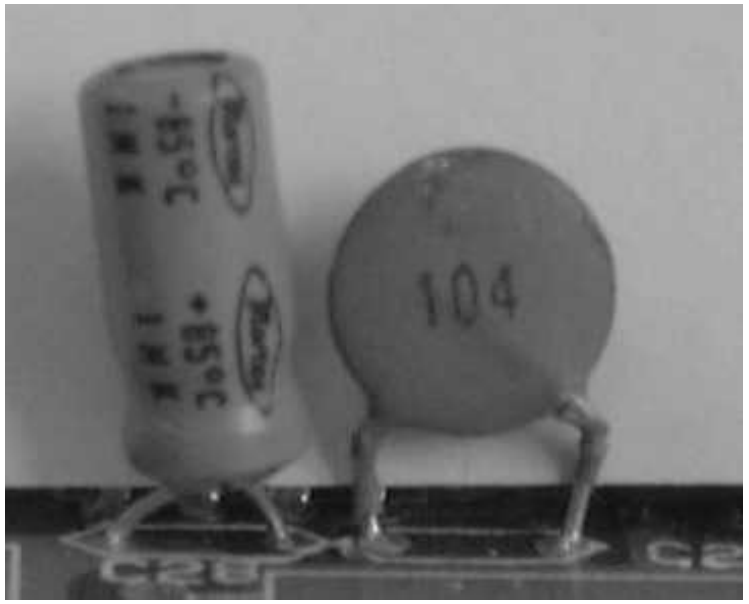



European American

Wiring Symbol

Figure 64 Capacitor Principle

FOR TRAINING PURPOSES ONLY!

© Lufthansa Technical Training

FACTORS AFFECTING CAPACITANCE

Area of the Plates

The area of the plates is also a factor which effects the capacitance of a capacitor.

The bigger the area, the bigger the capacitance.

There is no need to use plane plates. The plates can be curved or formed to a roll. They also can be divided into parts.

This is why various forms for the capacitor are possible. The capacitors can be kept small by these tricks.

Distance between the Plates

The more the bodies are apart the lower the attraction between the charges applied to the two bodies will be. So the amount of charges that can be applied decreases with the distance increasing.

As both bodies are insulated from each other the maximum voltage that can be applied depends from the insulating properties of the ambient material, usually air.

The larger the distance between the plates the higher the voltage that can be applied will be.

The Dielectric

In nature the space between two bodies is filled with air. Therefore air is used as a reference for possible fillings.

Vacuum and air have the relative permittivity $\varepsilon_r = 1$.

Some materials form electric dipoles when under influence of electrical fields. In that case the material itself acts as if it was a kind of conductor for the electrical lines of force. The result is the same as if the distance between the two bodies has been decreased.

The electric field intensity is increased, the attraction between the unlike charges rises.

FOR TRAINING PURPOSES ONLY!

© Lufthansa Technical Training

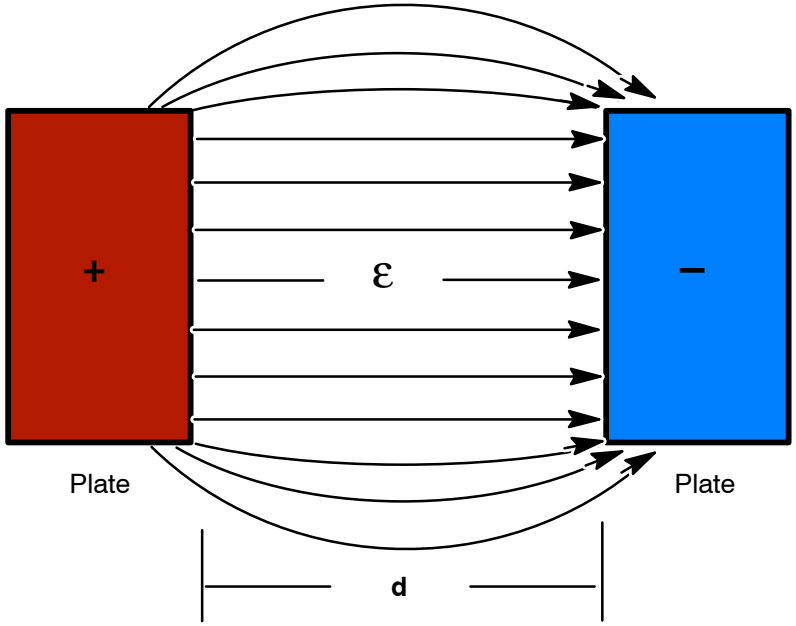

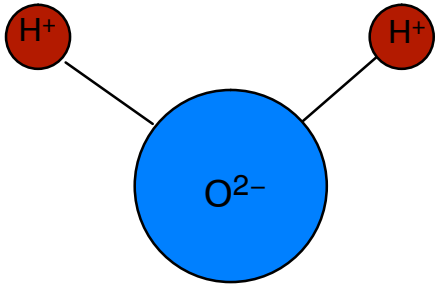

Dipol Effects of Water (H_2O)

Figure 65 Electric Field

FOR TRAINING PURPOSES ONLY!

© Lufthansa Technical Training

THE DIELECTRIC

General

The space between the plates will not be filled with air but with some dielectric material. As the dielectric material can (normally) stand higher voltages than air, the voltage that can be applied to the capacitor is higher.

Also the attraction between the unlike charges is increased allowing a higher density of charges (capacity).

Relative Permittivity

The increase of capacity is determined by the dielectric constant ε_r or relative permittivity.

This is a greek ε with index r (for relative).

As a reference vacuum is used having 1 as dielectric constant.

When regarded in detail, air has the relative permittivity 1,00059. For calculations this difference is negligible.

Maximum Voltage

Also the dielectric is used as an insulator for the plates. The better the insulating properties the higher the maximum voltage can be.

Examples

Example: relative permittivity ε_r	
Mica	6 ... 8
Hard Paper	4
Polystyrol	2,5
Cellulose Paper	4
Ceramics	10 ... 50 000

Tanks in Aeroplanes

The factor “dielectric“ on the capacity is also used for measuring the amount of fuel in the wings of an airplane. We use a so called tubular capacitor. It consists of two concentric tubes. The fuel is the dielectric. It will fill the space between the tubes. As the dielectric constant of fuel is 2.3, the capacitance varies due to the amount of fuel.

The water in the tank has to be drained regularly, because water would highly falsify the measurement. Water has a dielectric constant of 80!

FOR TRAINING PURPOSES ONLY!

© Lufthansa Technical Training

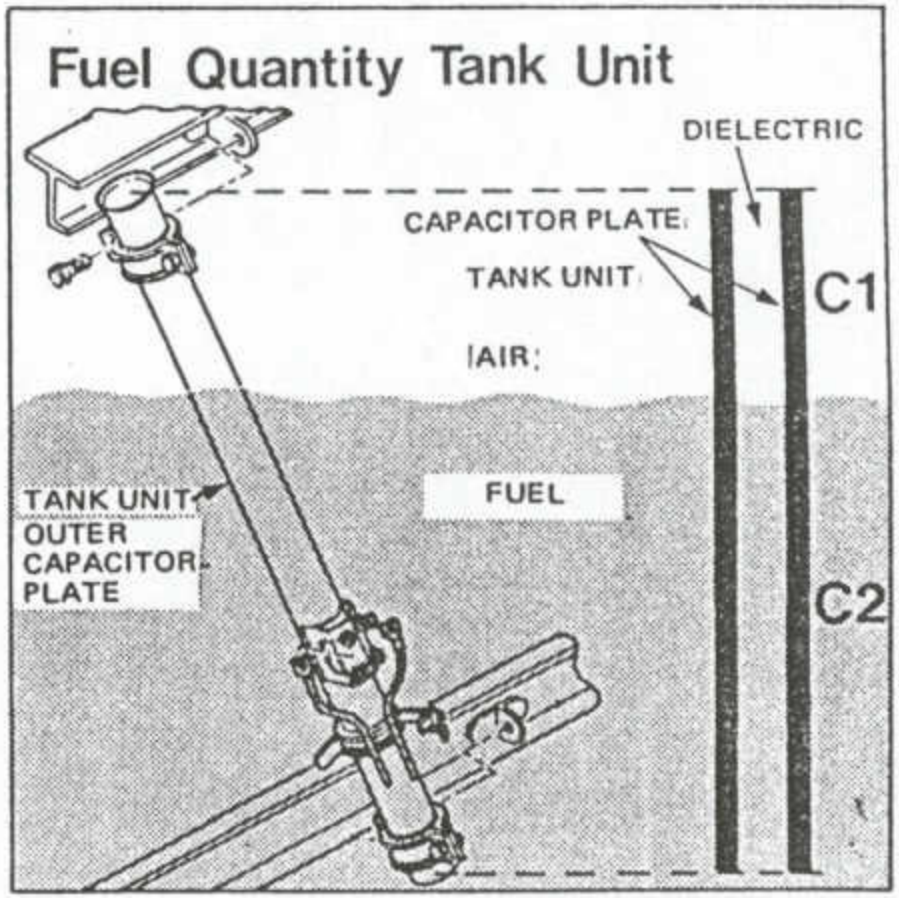

Figure 66 Fuel Tank: Influence of the Dielectric

FOR TRAINING PURPOSES ONLY!

© Lufthansa Technical Training

CAPACITOR CONSTRUCTION

Mechanical Construction

As two plates with large surfaces are not practical, the plates are usually cut into several pieces and arranged side by side. Then the total amount of the area remains the same but the dimensions of the capacitor change.

A capacitor with the plates in several pieces is more practicable. But there is another advantage: both the plates in the centre of the capacitor use both sides. This is an additional increase of the area used and therefore an increase of capacitance.

Another common method of capacitor construction is rolling the plates. In this case too, both sides of the plates are used and the capacitance is increased.

Size

Basically you can say:

The size of a capacitor depends on the capacity (area of the plates) and the maximum voltage (thickness of the dielectric).

FOR TRAINING PURPOSES ONLY!

© Lufthansa Technical Training

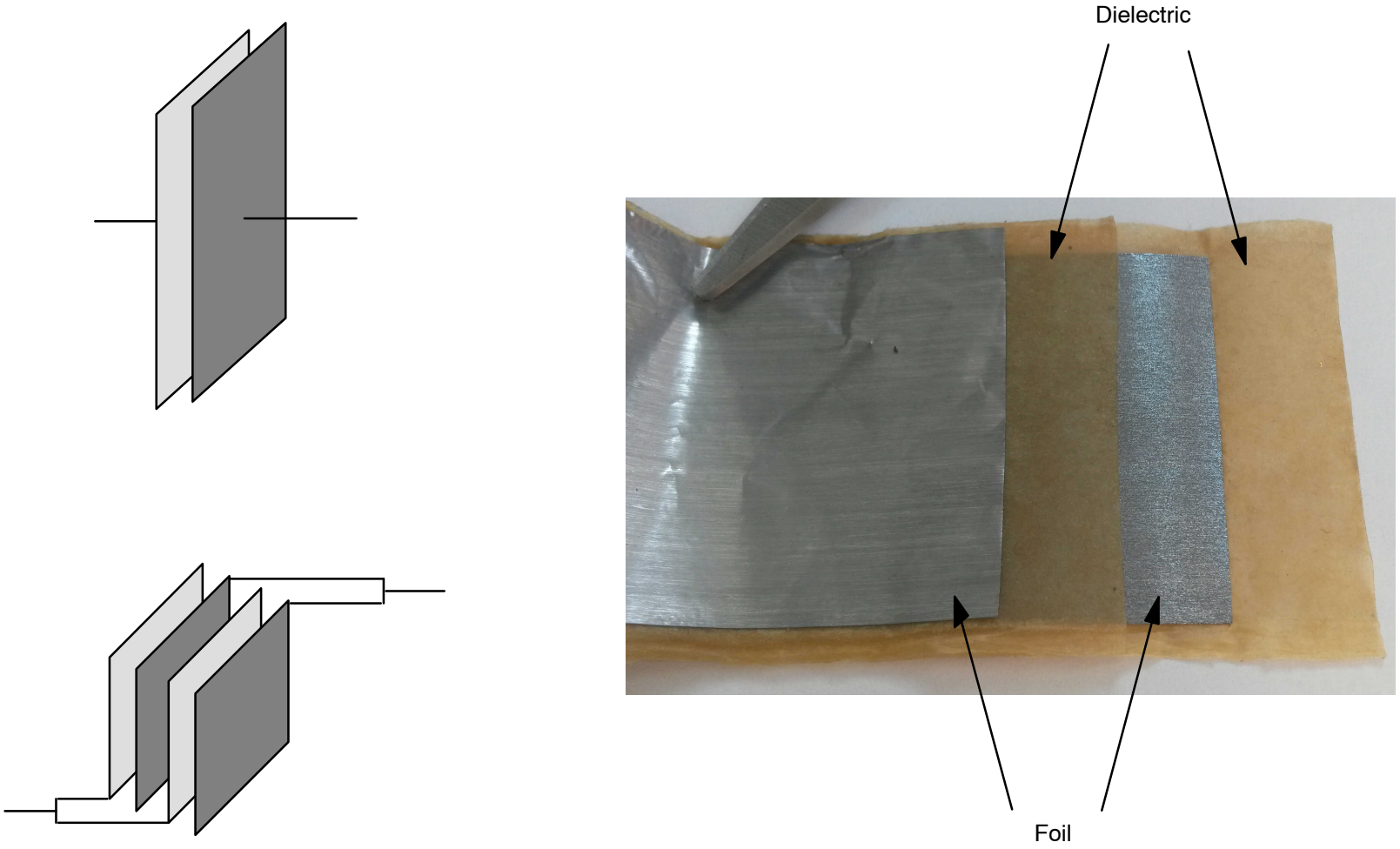

Figure 67 Basic Construction of Capacitors

FOR TRAINING PURPOSES ONLY!

© Lufthansa Technical Training

TYPES OF CAPACITORS

Paper or Film Capacitors

Between the paper foil or the plastic film (=dielectric) there are two conducting layers. These can consist of metal foil or an evaporated metal layer.

This type of capacitor is non−polar and can be used with direct or AC voltage. There are paper or film capacitors for all capacitance values.

Electrolytic Capacitors

Contrary to the capacitors mentioned above the electrolytic capacitor has only one aluminium foil as positive electrode.

The second conducting layer is a thickened or solid electrolyte that makes the conducting connection (= negative electrode) with the housing possible.

The dielectric forms a thin aluminium−oxide layer on the aluminium foil. Therefore the electrolytic capacitor is polarized. If it is connected to DC voltage with the wrong polarity, or if it is operated with AC voltage, the dielectric is destroyed and will cause a short circuit!

Electrolytic capacitors with DC voltage are used where high capacity is needed in a close space (flashguns, capacitive filtering of DC voltage etc.)

FOR TRAINING PURPOSES ONLY!

© Lufthansa Technical Training







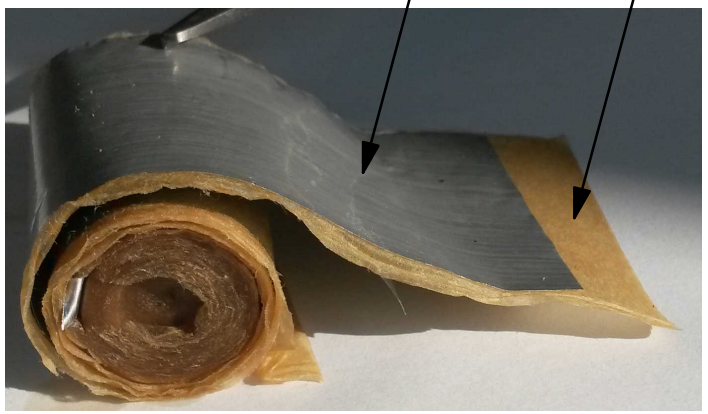

Electrolyte Capacitor

Figure 68 Shapes of Capacitors

FOR TRAINING PURPOSES ONLY!

© Lufthansa Technical Training

Variable Capacitors

For adjustment (frequency selection) variable capacitors are used.

By means of a rotary knob the overlapping of the plates can be set.

FOR TRAINING PURPOSES ONLY!

© Lufthansa Technical Training

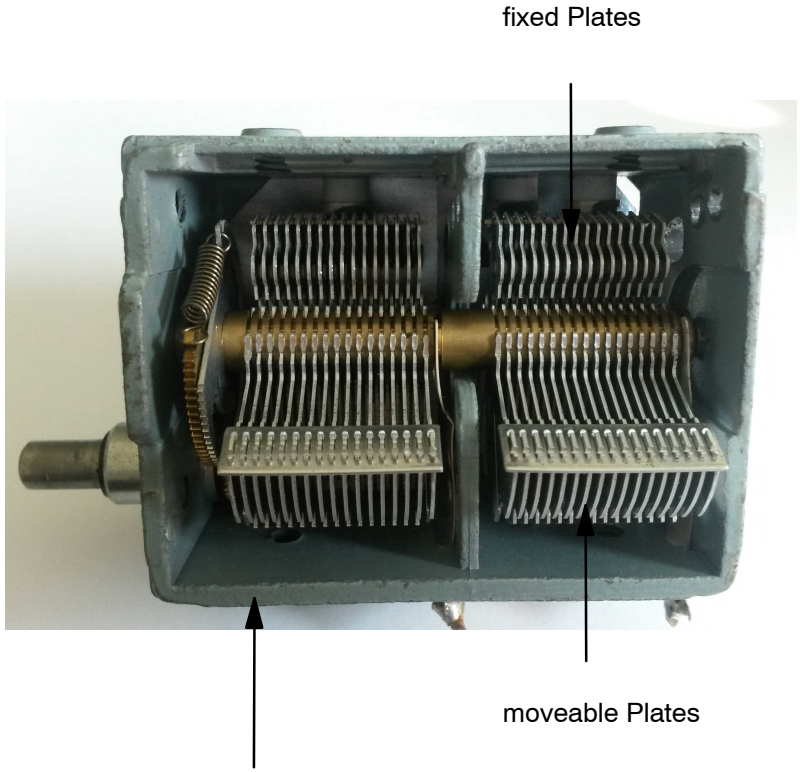





Figure 69 Variable Capacitors

FOR TRAINING PURPOSES ONLY!

© Lufthansa Technical Training

COLOUR CODING

The capacitance can be printed as plain text as well as colour coding.

For the colour coding the Resistor table can be applied with the 3rd ring as a factor in pF (pico Farad).

Table

Each colour represents a value:

Colour	1. Digit	2. Digit	Factor
None	-	-	-
Silver	-	-	10^{-2}
Gold	-	-	10^{-1}
Black	-	0	1
Brown	1	1	10
Red	2	2	10^{2}
Orange	3	3	10^{3}
Yellow	4	4	10^{4}
Green	5	5	10^{5}
Blue	6	6	10^{6}
Violet	7	7	10^{7}
Grey	8	8	10^{8}
White	9	9	10^{9}

FOR TRAINING PURPOSES ONLY!

© Lufthansa Technical Training







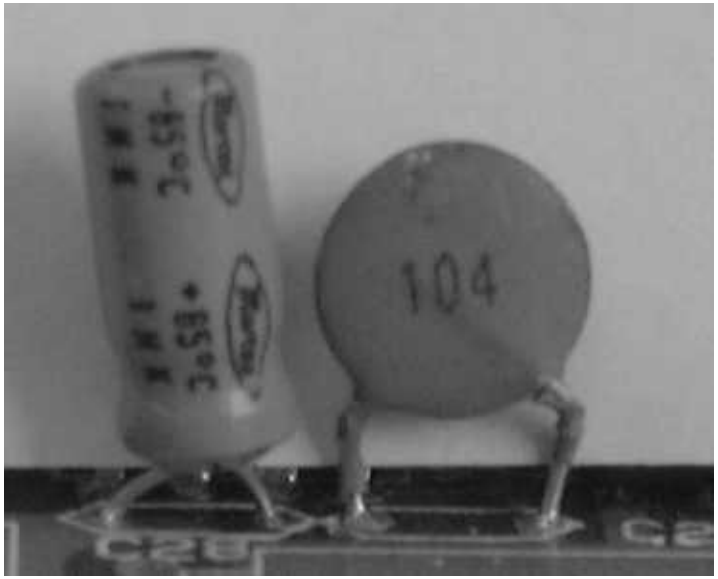

Figure 70 Capacitors

FOR TRAINING PURPOSES ONLY!

© Lufthansa Technical Training

Maximum Voltage

As already mentioned the maximum voltage that can be applied to the capacitor depends on the distance between the plates and the dielectric filling between the plates.

The voltage rating is stated on the capacitor either in plain test or with a colour coding as a 4th ring.

If there is a colour code for the tolerance the tolerance code is the 4th ring and the voltage rating is the 5th ring. But other sequences are also possible.

AC Voltage

Please note that the maximum AC voltage is significantly lower than the maximum DC voltage as usually AC voltages are given as RMS values. The peak voltage of a sine AC as an example is 1.41 times the RMS value.

So if a capacitor can withstand 100 Volts DC its maximum AC voltage is 70.7 Volts only. Exceeding that voltage will cause arcing between the plates degrading the capacitor properties.

No ring	500 V
Silver	2 kV
Gold	1 kV
Brown	100 V
Red	200 V
Orange	300 V
Yellow	400 V
Green	500 V
Blue	600 V
Violet	700 V
Grey	800 V
White	900 V

FOR TRAINING PURPOSES ONLY!

© Lufthansa Technical Training

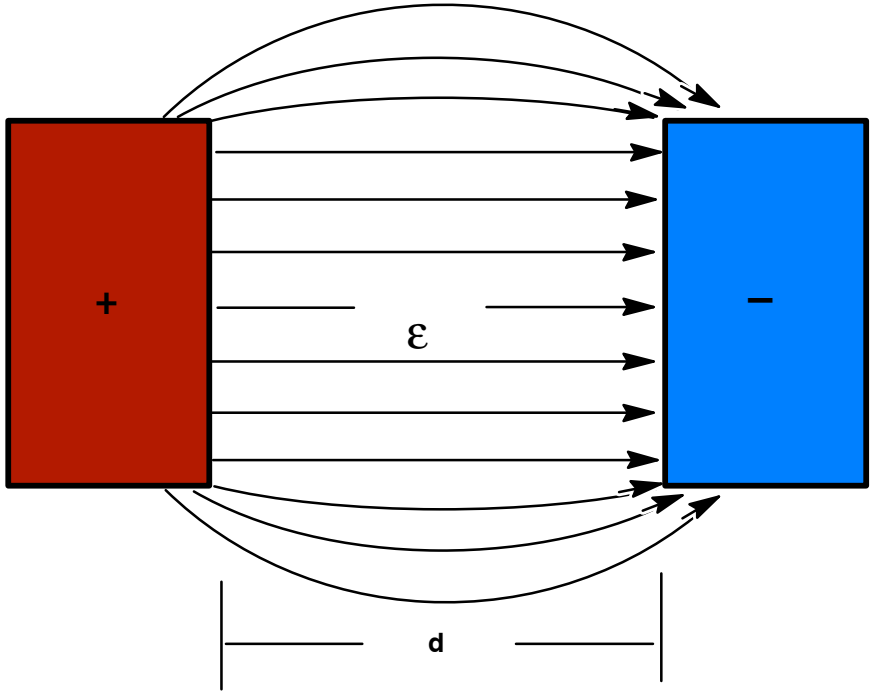

Figure 71 Electric Field

FOR TRAINING PURPOSES ONLY!

© Lufthansa Technical Training

CAPACITORS IN PARALLEL AND IN SERIES

General

With the parallel and series connection of capacitors there are rules as for resistors in parallel and series.

Capacitors in Parallel

We have seen that the plates that were cut into smaller pieces are connected in parallel. But it was said that their capacities should be added together.

Thus, when connecting capacitors in parallel the areas of the plates are added together and therefore the individual capacities are also added together.

When capacitors are in parallel, their capacity is added.

$$C_{total} = C_1 + C_2 + ...$$

Voltage at Capacitors in Parallel

Capacitors in parallel will all have the same voltage.

Capacitors in Series

When capacitors are connected in series it looks as if the individual distances between the plates are added. That makes the total capacitance decrease.

The sum of the capacitance is smaller than that of the smallest individual capacitance.

$$C_{total} = \frac{1}{\frac{1}{C_1} + \frac{1}{C_2} + ...}$$

Voltage at Capacitors in Series

In a series arrangement the total voltage is divided between the capacitors depending on their capacity. As a small capacitor will charge up more quickly than a large capacitor its voltage will be higher as on the larger capacitor.

The voltage is inverse proportional to the capacity.

CALCULATIONS

Example 1

Two Capacitors are connected in series with C_1 = 100 µF and C_2 = 50 µF.

What is the total capacity?

In this case the total capacity is 33 µF.

Example 2

100 V are applied to the two capacitors.

What is the individual voltage?

$$U_{C_1} = \frac{33\mu F}{100\mu F} \times 100V = 33V$$

$$U_{C_2} = \frac{33\mu F}{50\mu F} \times 100V = 66V$$

FOR TRAINING PURPOSES ONLY!

© Lufthansa Technical Training

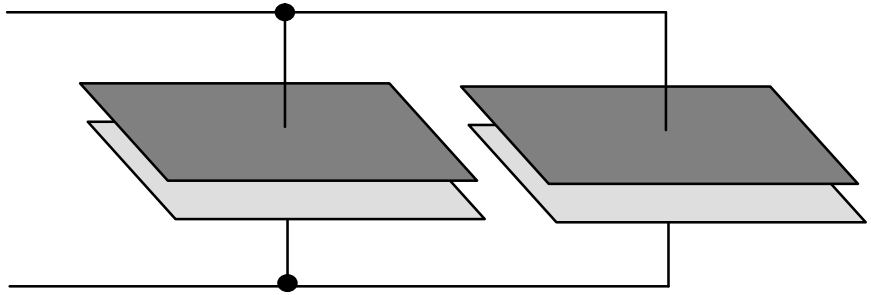

Capacitors in Parallel

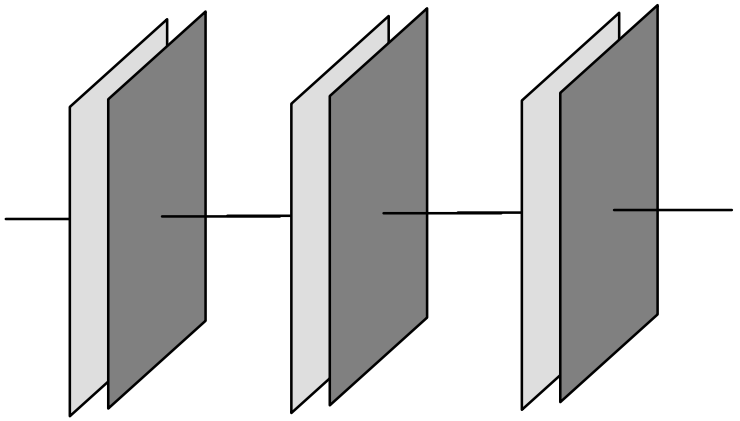

Capacitors in a Series Connection

Figure 72 Capacitors in Parallel and Series Connection

FOR TRAINING PURPOSES ONLY!

© Lufthansa Technical Training

CHARGING/DISCHARGING OF CAPACITORS

Principle of charging

When connecting a completely discharged (new) capacitor to a battery the initial current will be extremely high because the capacitor has no voltage. So for limiting this initial current we always use capacitors with a resistor in series. In that case the initial current depends only on the resistor.

In a series connection the voltage of the battery is divided between the loads. When first switching on, the capacitor is empty so it has no voltage. So the whole battery voltage has to be consumed by the resistor. As Ohm's Law is always valid, the resistor limits the current. Initial current is:

$$\mathbf{I} = \frac{\mathbf{U}}{\mathbf{R}}$$

In this example, the initial current will be 1 A.

As the capacitor gets charged, voltage arises. The voltage of a resistor and capacitor together are the sum of the battery voltage. That means: The higher the capacitor voltage the lower the resistor voltage.

Example

The capacitor voltage is 4 V. So the resistor voltage must be 6 V. But this also affects the current:

$$\mathrm{I} = \frac{\mathrm{U}}{\mathrm{R}} = \frac{6\mathrm{V}}{10\Omega} = 0.6\mathrm{A}$$

Finally: The more the capacitor gets charged the lower the current will be.

FOR TRAINING PURPOSES ONLY!

© Lufthansa Technical Training

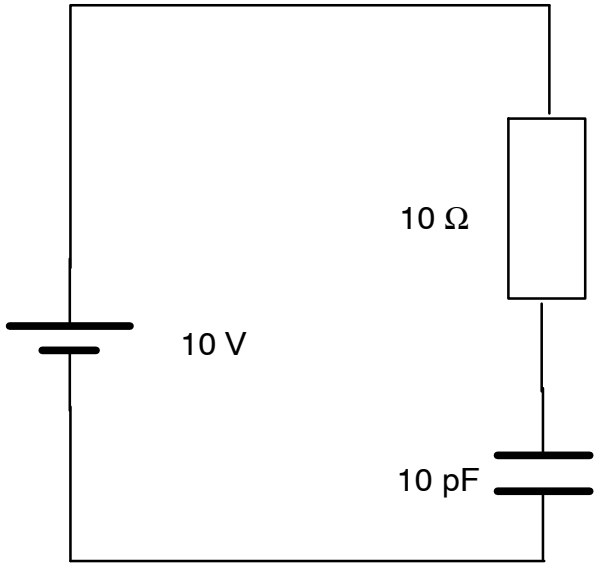

Figure 73 Charging of Capacitors

FOR TRAINING PURPOSES ONLY!

© Lufthansa Technical Training

Time Constant of Capacitors

The higher the capacitance the longer the charging time will be.

The higher the resistance the longer the charging time will be.

The product of resistance and capacitance is called time constant.

$$\tau = R \times C$$

This constant also describes how a capacitor is charged. You have already learnt that the current (speed of charge) decreases with the capacitor's voltage increasing. The course of the graph is called e–function. The charge formula will be:

$$I = \frac{U}{R} \times e^{-\frac{t}{\tau}} \; ; \quad Uc = U \times (1 - e^{-\frac{t}{\tau}})$$

Important Norms

The norms for the time constant is as follows:

- After the time τ the capacitor is 63 % charged.
- After $5 \times \tau$ it is charged completely.

Discharge

At discharge the current looks the same as above, only the voltage will not rise but fall the same way the current does.

Accident prevention precautions

Charged capacitors are sources of danger. They can cause electric shocks, particularly if the voltage exceeds 65 Volts.

Capacitors must always be discharged before starting to work.

As an example the igniter box contains a resistor in parallel to the capacitor. It makes sure that the capacitor gets discharged when not in use.

A capacitor can keep its charge over days and sometimes even weeks.

FOR TRAINING PURPOSES ONLY!

© Lufthansa Technical Training

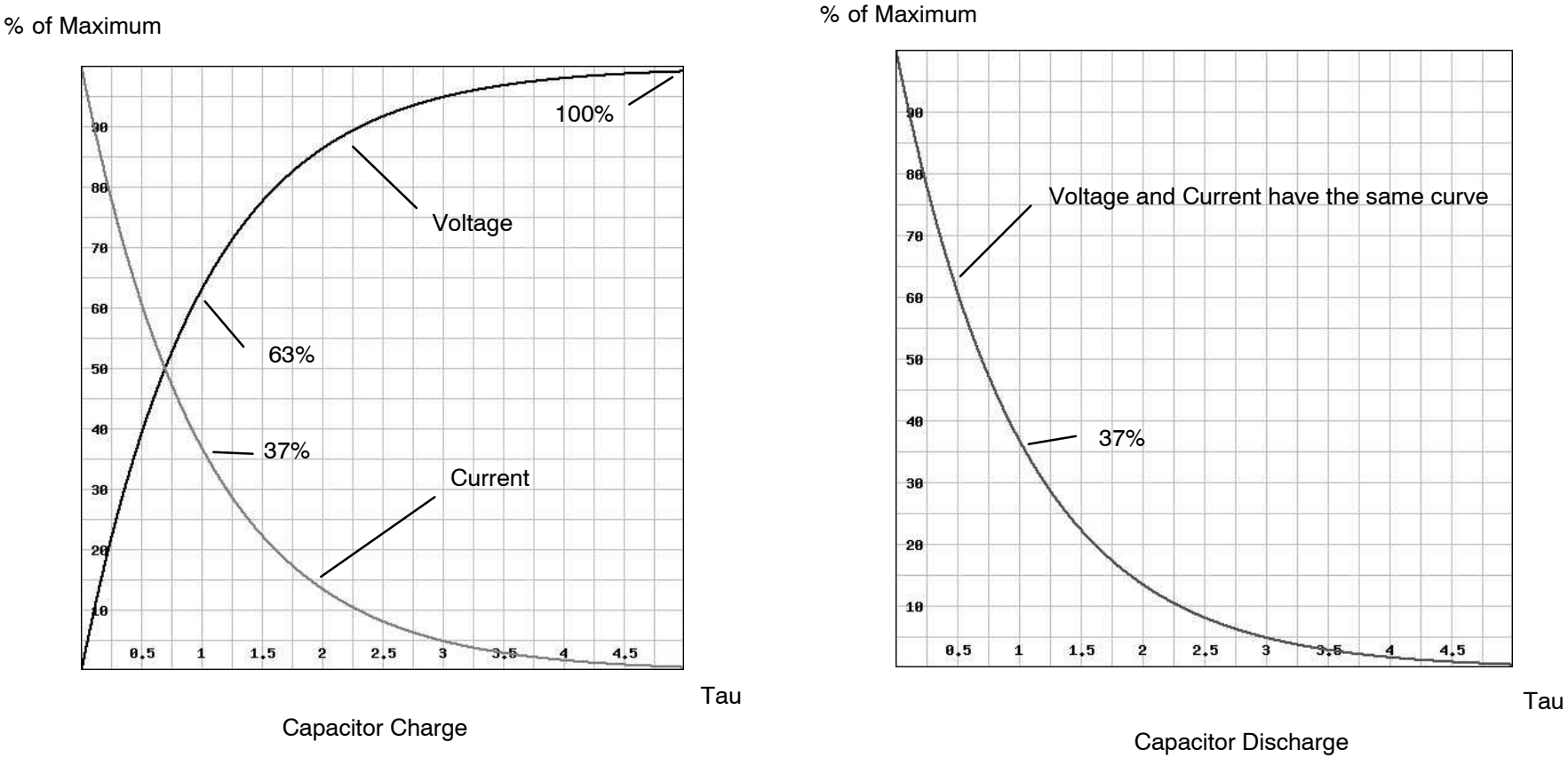

Figure 74 Graphs of Capacitors Charging / Discharging

FOR TRAINING PURPOSES ONLY!

© Lufthansa Technical Training

CAPACITOR TESTING

General

Visual inspection of capacitors is limited to looking for bulging of the casing and electrolyte leakage.

To test a capacitor, an ohmmeter can be used. The capacitor charges from the internal battery of the ohmmeter.

Select [Rx1] or [Rx10] for a large value capacitors (>1µF) and [Rx100] or above for small values <1µF).

First of all, discharge the capacitor by shorting the capacitors leads together.

Place the positive probe of the ohmmeter to the positive lead of the capacitor, and the negative probe to the negative lead. The meter pointer should move to zero resistance then swing to infinity as the capacitor charges.

Discharge the capacitor again and repeat the test this time touching the negative probe to the positive lead. The meters' pointer should move to zero and then swing close to infinity.

These results indicate that the capacitor is probably OK.

If a capacitor has an open−circuit (fault) you will get an infinity resistance on both readings.

If it is shorted (fault) you will get zero or near zero reading and it will never swing to infinity on either reading.

A good capacitor that can store a charge with less leakage will show an infinity resistance reading, which means no current flow, after it is fully charged.

Small Capacitors

This test is satisfactory unless the capacitor value is very small when the charging time will be extremely fast. If this is the case then a dedicated LCR tester is required.

Failures

Capacitor failures can be categorized into two main areas:

Catastrophic failures:

Generally caused by a short circuit through dielectric breakdown or open circuits caused by connection failures.

Degradation failures:

Usually caused by a gradual decrease in leakage resistance resulting in an increase in leakage current or an increase in equivalent series resistance or dielectric absorption.

Another failure which sometimes occurs is excessive equivalent series resistance. This can be caused by a defective lead to plate contact, resistive leads or resistive plates and occurs under A.C. conditions only.

More than 40% of all defective capacitors have excessive leakage current with electrolytic capacitors being particularly susceptible.

Dielectric absorption, which makes up 25% of defects, occurs mainly in electrolytic capacitors when they do not completely discharge during use and retain a residual charge.

FOR TRAINING PURPOSES ONLY!

© Lufthansa Technical Training

THIS PAGE INTENTIONALLY LEFT BLANK

FOR TRAINING PURPOSES ONLY!

© Lufthansa Technical Training

M3.10 MAGNETISM

PROPERTIES OF PERMANENT MAGNETS

Force

Some materials can exert a force on other materials. This characteristic is called magnetism.

Magnets can attract or repel each other.

Material

Magnets are made of steel, steel alloys or certain permanent magnet materials.

Magnetic Field

The cause is an invisible magnetic field around the magnets. These lines of magnetic flux are closed loops so that they continue even inside the magnets.

The lines have no beginning and no end.

Direction

There is a definition for the direction of the magnetic field lines.

Outside the magnet, they run from the north pole to the south pole.

Poles

All magnets have spots where their attractive force is particularly high, the poles.

Neutral Zone

In the middle of a magnet there is an area without attractive force. It is called the neutral zone.

FOR TRAINING PURPOSES ONLY!

© Lufthansa Technical Training

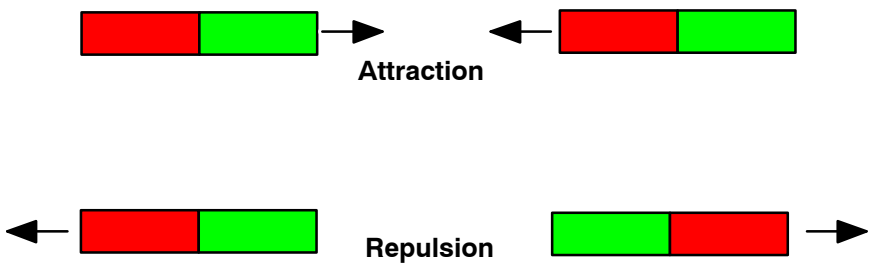

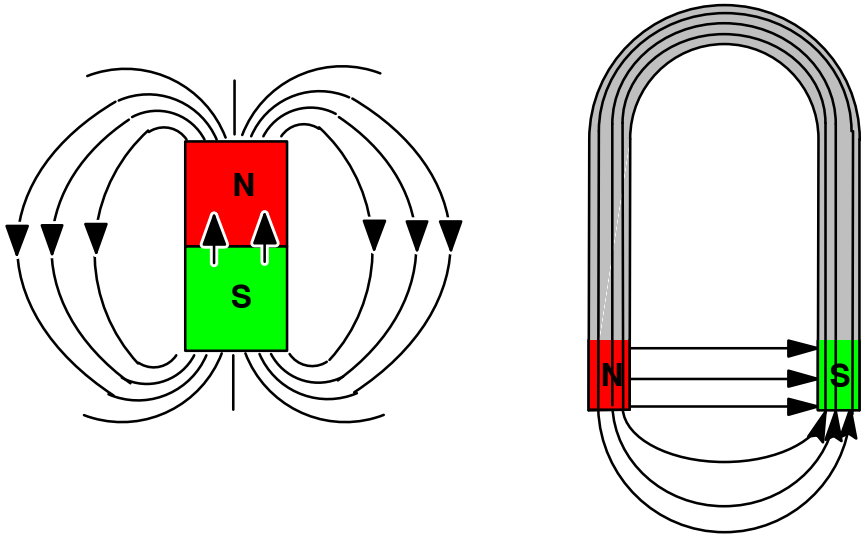

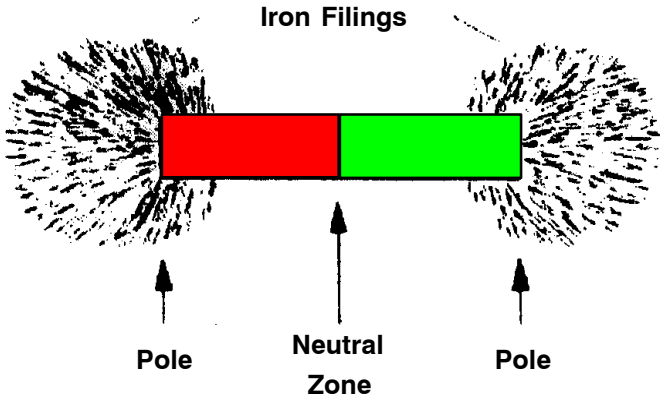

Proof of the poles and the neutral zone of a bar magnet

Figure 75 Magnetism

FOR TRAINING PURPOSES ONLY!

© Lufthansa Technical Training

MAGNET IN THE EARTH'S MAGNETIC FIELD

Earth

There is a magnetic field around the earth; the earth is a permanent magnet.

This characteristic is used for magnetic compasses.

Geographic Poles

The geographic poles are the points where the earth's rotation axis meet the surface.

The geographic north pole is the northernmost point on earth.

Magnetic Poles

The so called north magnetic pole is close to the geographic north pole, but it is not the same. Additionally, it moves slowly.

The so called south magnetic pole also moves slowly.

Orientation

Magnets are affected by the earth's magnetic field.

When a bearing allows rotation, magnets will try to point to the earth's north pole with one end and to the south with the other end.

This effect is used in compass needles. They can turn freely with very low friction.

FOR TRAINING PURPOSES ONLY!

© Lufthansa Technical Training

Note: when regarded as a real existing magnet, the “North Magnetic Pole“ is a south pole

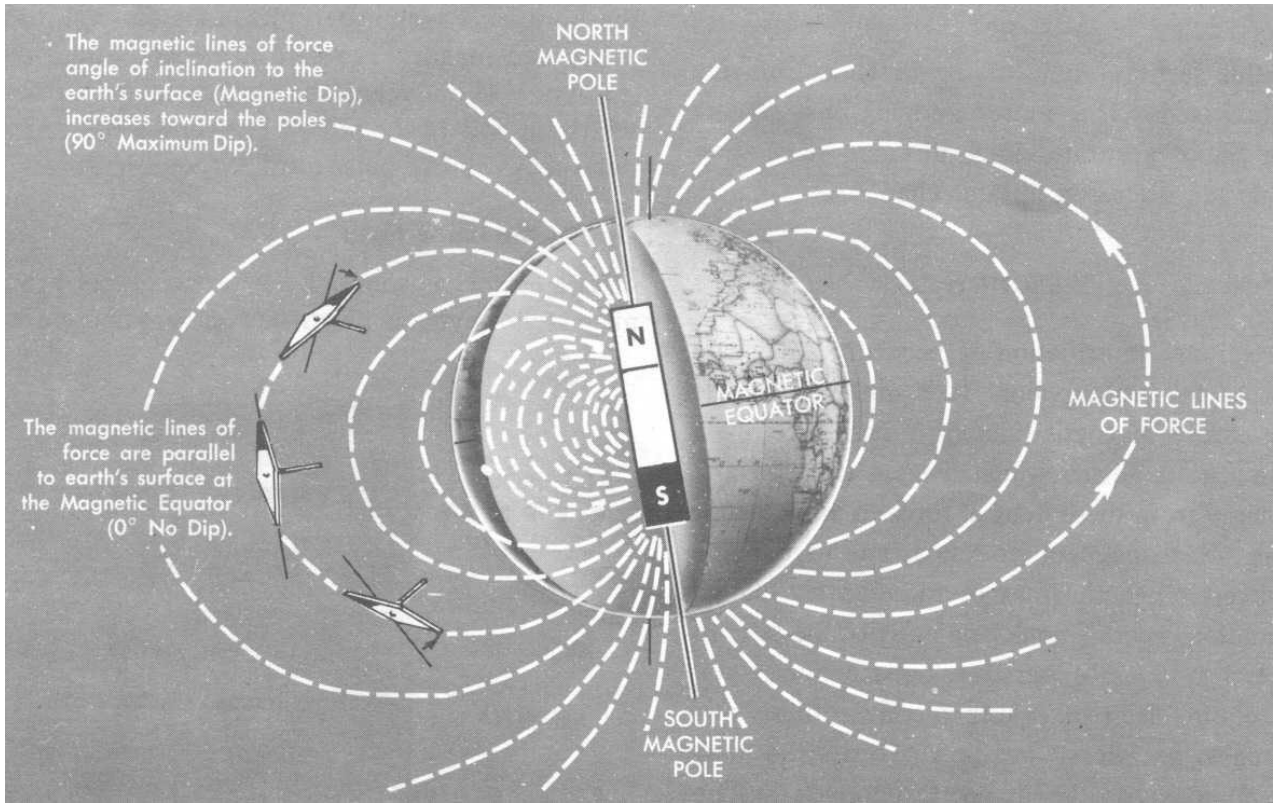

Figure 76 Magnetic Compass

FOR TRAINING PURPOSES ONLY!

© Lufthansa Technical Training

THEORY OF MAGNETISM

Weiss Domains

Iron consists of many very small magnets, the so called Weiss domains, pointing in many directions. From a distance it looks as if the iron bar is not magnetic, because the magnetic fields cancel each other out.

If a piece of metal is placed inside a magnetic field, the small magnets in the iron align in one common direction and form a big magnetic field.

You see that the cause for magnetism cannot be accumulated to one small spot, the whole iron bar is responsible for the magnetic force. Therefore the flux lines must continue inside the iron (as previously mentioned).

Broken Magnet

Regardless of how many pieces a magnet is broken into, each piece retains a north and south pole.

FOR TRAINING PURPOSES ONLY!

© Lufthansa Technical Training

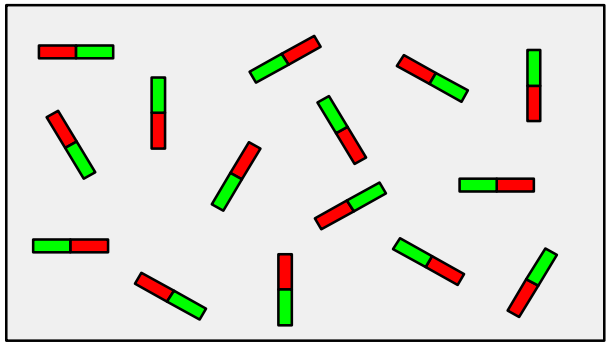

Non-magnetized iron

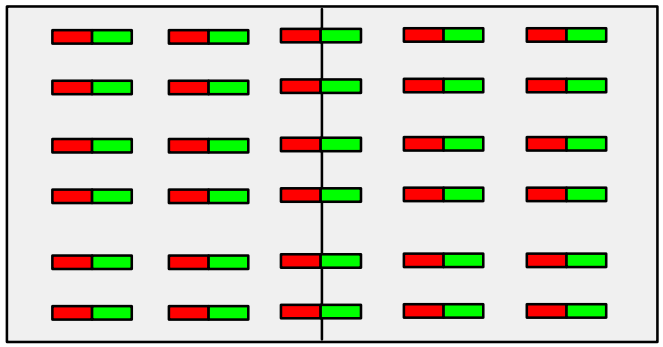

Magnetized iron

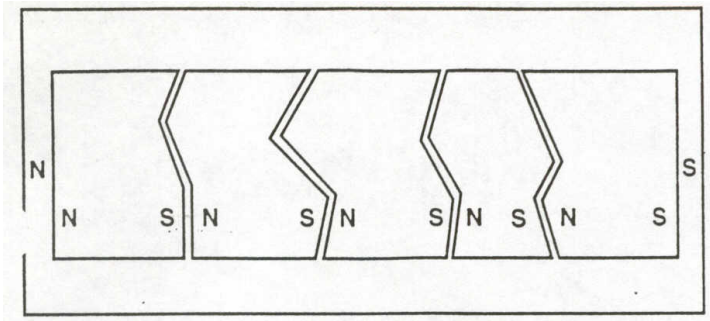

Broken magnetized iron

Figure 77 Weiss Domains

FOR TRAINING PURPOSES ONLY!

© Lufthansa Technical Training

TYPES OF MAGNETIC MATERIAL

General

Materials are divided into three different types depending on their magnetic characteristics:

- Ferromagnetics
- Paramagnetics
- Diamagnetics

Each type has some special effect on the magnetic lines of force.

Ferromagnetics

Ferromagnetic materials are used for magnets as they can be magnetized and they also attract magnetic lines of force.

They have a high conductance or, in other words, low (magnetic) resistance to these lines of force. As the lines of force always try to use the easiest path, they run through the ferromagnetic instead of through the air. Therefore the lines of force get drawn away from the air and concentrate inside the ferromagnetic.

Typical material are: iron, nickel and cobalt.

Paramagnetics

Paramagnetics also have a lower (magnetic) resistance than air, but in contrast to ferromagnetics their resistance is nearly the same as air.

So only very few lines of force get drawn away from the air and into the paramagnetics. The concentration of these lines of force is, therefore, very weak.

Typical materials are oxygen, aluminium and platinum.

Diamagnetics

Diamagnetics have a higher resistance than air.

So the lines of force try to avoid passing through that material because they always want to take the easiest path. They are pushed out of the diamagnetic and into the air.

Typical materials are copper, gold and zinc.

FOR TRAINING PURPOSES ONLY!

© Lufthansa Technical Training

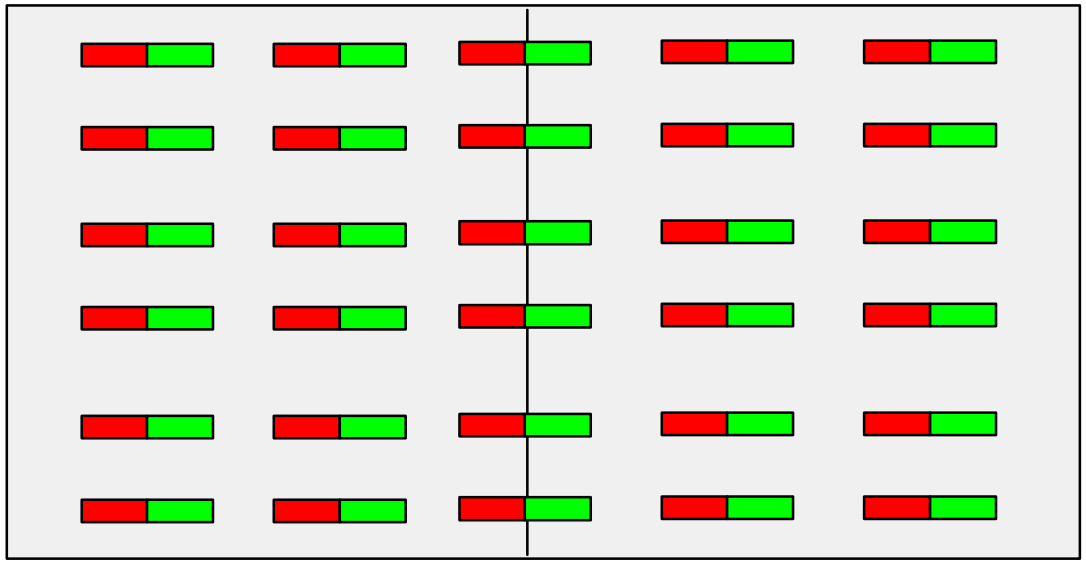

Figure 78 Magnetized Iron

FOR TRAINING PURPOSES ONLY!

© Lufthansa Technical Training

MAGNETIZATION

General

If ferromagnetic material is bought into a magnetic field, then the Weiss domains are aligned within a limit. The limit depends on the strength of the magnetic field.

If the cause of the magnetic field is removed with the movement in direction of the field lines, the field weakens and the Weiss domains will not fully turn to their former positions. They will be more orientated to the magnetic field which has turned them before.

Vibration

This effect can increase if the material is set into vibration. So the Weiss domains can turn more easily.

Lightning Strike

During a lightning strike there is a extremely high current in a very short time.

By this, ferromagnetic materials can be magnetized.

In aircraft some parts can become magnetized, for example the metal structure between the cockpit windows.

FOR TRAINING PURPOSES ONLY!

© Lufthansa Technical Training

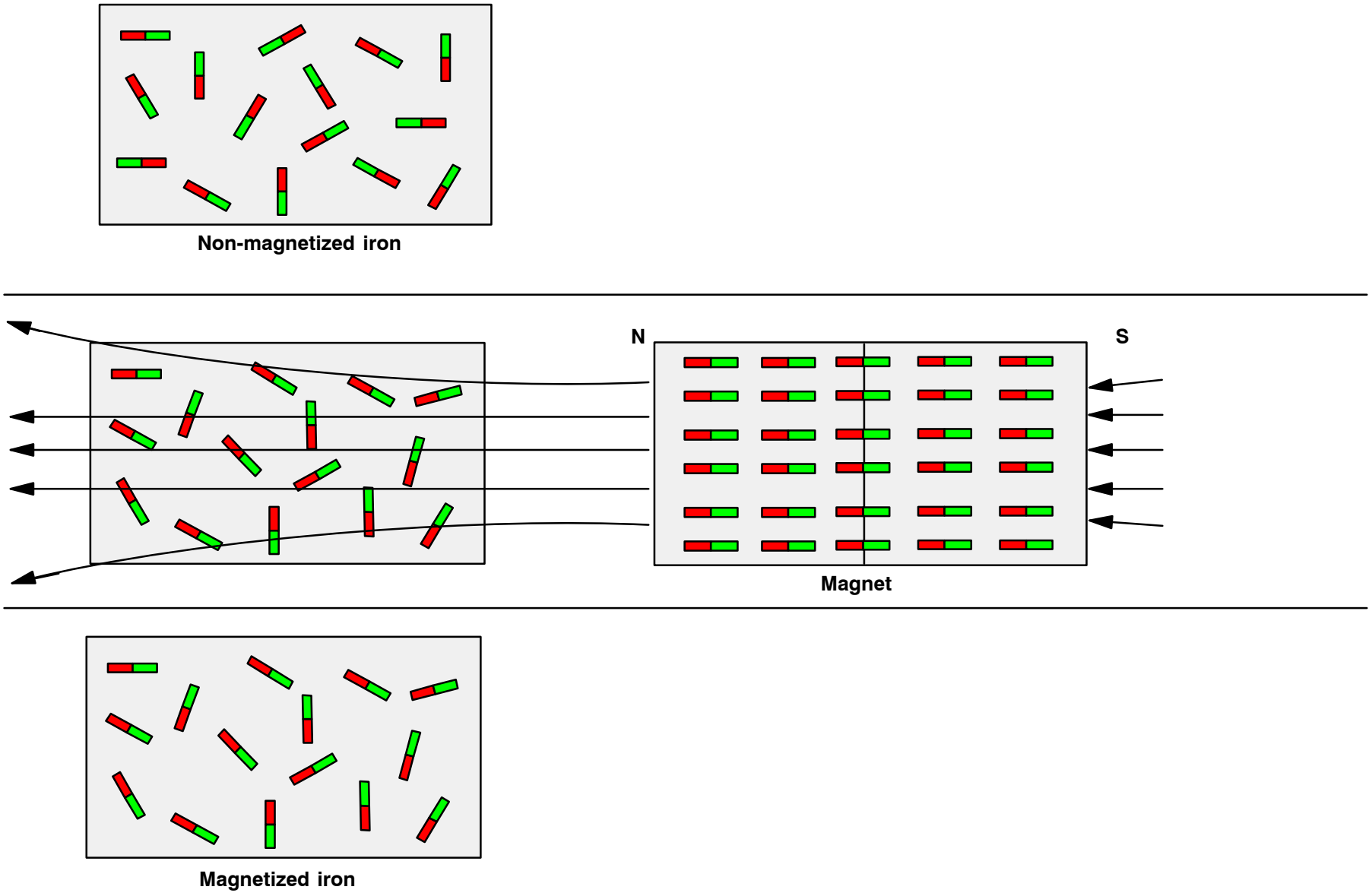

WeR

Figure 79 Magnetization

FOR TRAINING PURPOSES ONLY!

© Lufthansa Technical Training

DEMAGNETIZATION

General

If magnetism has to be removed from a work piece or a tool, it has to be demagnetized.

This can be done by the following methods:

- The item that is to be demagnetized is slowly moved away from a strong alternating magnetic field.

  For big items a very strong field is required. This procedure is necessary e.g. for monitors after a lightning strike

- Mechanical force.

  By mechanical force (shocks or dropping) the small magnets are removed from their ordered position. To fully demagnetize an item, the procedure has to be frequently repeated.

- Heating beyond the Curie temperature.

  The disadvantage is that the magnetism may recur, if the temperature falls below the Curie temperature. For iron this temperature is 769°C.

Curie-Temperature	Degrees Celsius
Iron	769
Nickel	356
Cobalt	1075
Some Ferrites	50 - 600

FOR TRAINING PURPOSES ONLY!

© Lufthansa Technical Training

THIS PAGE INTENTIONALLY LEFT BLANK

FOR TRAINING PURPOSES ONLY!

© Lufthansa Technical Training

HANDLING AND STORING

Safety precautions for handling and storing of magnets

- Strong permanent magnets (magnetically hard materials) are sensitive to shocks. They lose their magnetism. Avoid intense vibrations!
- External magnetic fields should be kept away from permanent magnets.
- Temperatures of up to 250°C can cause a reduction of the magnetic flow. If the temperature decreases again, the previous state is reached again. Higher temperatures (than 250°C) cause a final demagnetization.
- If magnets are stored for a longer time, the magnetic circuit must not be changed, e.g. by removing the magnet from its housing. This can be avoided by short–circuiting the magnet with a ferromagnetic material beforehand. These ferromagnetic utilities are also known as ”Keeper”.

FOR TRAINING PURPOSES ONLY!

© Lufthansa Technical Training

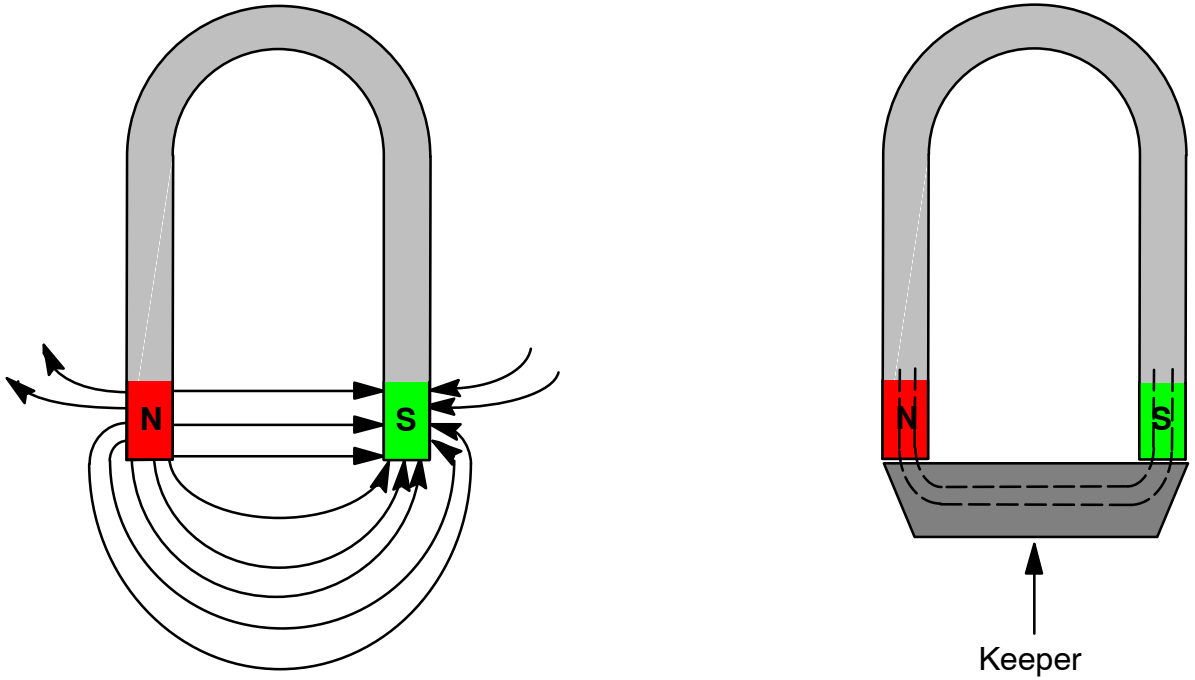

Figure 80 Magnet Storing

FOR TRAINING PURPOSES ONLY!

© Lufthansa Technical Training

MAGNETIC SHIELDING

Ferromagnetic Ring

A steel ring shows the principle of shielding magnetically sensitive devices from external magnetic fields. This method is commonly used in practice.

For this purpose the device is enclosed with a good magnetic conductor.

FOR TRAINING PURPOSES ONLY!

© Lufthansa Technical Training

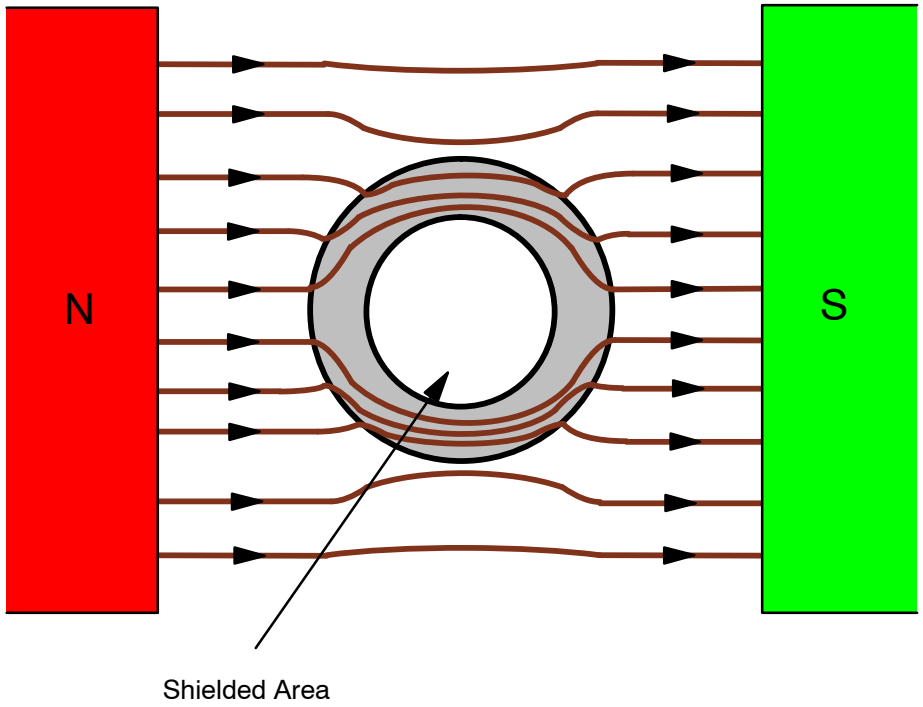

Figure 81 Magnetic Shielding

FOR TRAINING PURPOSES ONLY!

© Lufthansa Technical Training

APPLICATION EXAMPLES

Proximity Switch

A sensor which can detect an object coming nearer by the change of the magnetic field is a proximity switch.

Proximity switches are used to monitor the position of the landing gear and the undercarriage door.

When a target (actuator or slug) approaches, a switch (Reed Switch or Electronic Switch) is operated in a sensor unit without a mechanically or electrically conducting connection.

Reed Switch

If the target is not connected to the sensor unit, the metal tongues of the Reed SW are open. If the permanent magnet of the target is connected to the sensor unit, the ends of the Reed SW are magnetized and attract each other..

The operating of the Reed SW can be tested with an ohmmeter and a permanent magnet. Only perform the test when the power supply is switched off.

There are Reed SW NO–type (normally open) and NC– type (normally closed).

FOR TRAINING PURPOSES ONLY!

© Lufthansa Technical Training

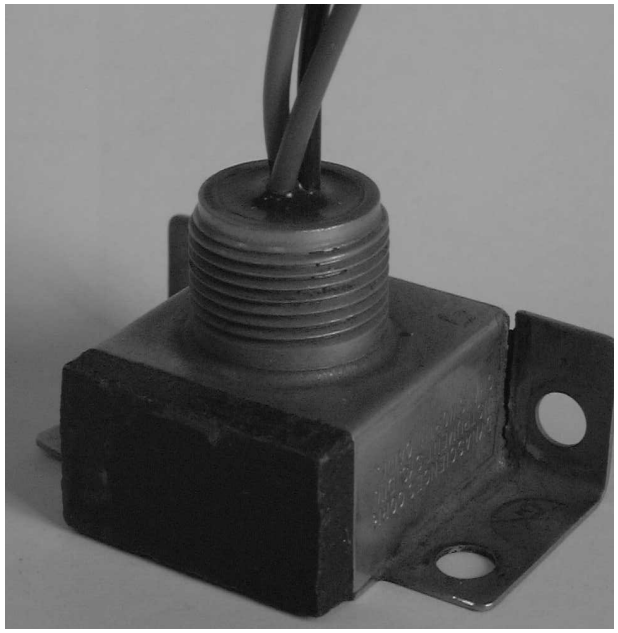

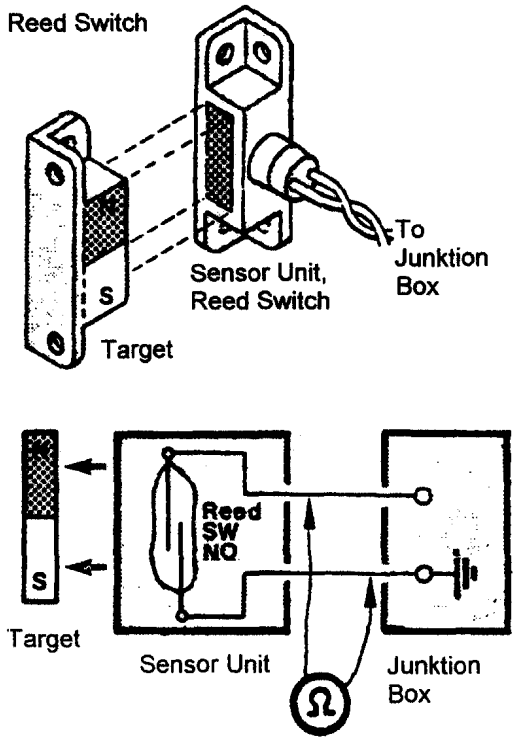

Figure 82 Proximity Switch

FOR TRAINING PURPOSES ONLY!

© Lufthansa Technical Training

ELECTRIC CURRENT AND MAGNETIC FIELDS

Magnetic Effect of Current

If a current flows through a conductor, a magnetic field is generated.

Every current produces a magnetic field.

Considering the direction of the current, the flux lines of the magnetic field run clockwise.

Direction

Magnetic field lines are a closed cycle with a direction.

When the field lines do not flow partly through a ferromagnetic material, like in usual magnets, then there is no location which can be called a “pole“.

To illustrate this dependency on the direction, imagine the conductor as an arrow in current direction (technical current flow).

If the current flows into the conductor, you see the tail of the arrow as a cross.

Corkscrew Rule

If a corkscrew is turned in (current flows into conductor), the flux lines turn analogue to the corkscrew – i.e. clockwise.

Right Hand Rule

As an alternative to the Corkscrew Rule, the Right Hand Rule can be used.

The thumb shows into the direction of the current. The curving fingers show the direction of the magnetic field lines.

FOR TRAINING PURPOSES ONLY!

© Lufthansa Technical Training

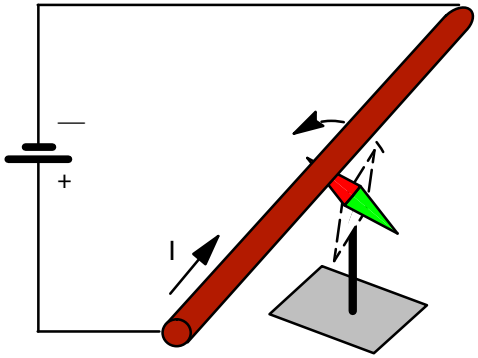

Magnetic Deflection of a Compass Needle

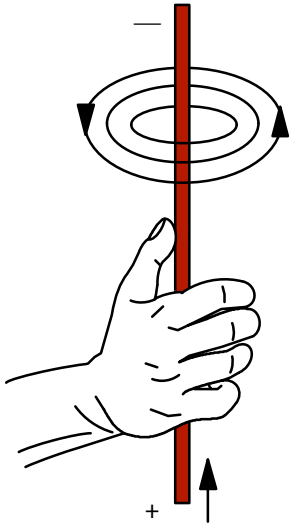

Figure 83 Current and Magnetic Field

FOR TRAINING PURPOSES ONLY!

© Lufthansa Technical Training

SUMMATION OF MAGNETIC FIELDS

Superposition

Having two conductors parallel makes their magnetic fields overlap. If the direction of the current is the same, the magnetic fields overlap and form a large magnetic field. The superposition results in a summation of the magnetic fields.

Depending on the direction of the current running the conductors repel or attract just like magnets.

If the direction of the current is the same, the wires attract.

If the direction of the current is different, the wires repel.

Direction

If this Magnetic field partly flows through an iron bar, this iron bar will have a north pole and a south pole like a permanent magnet.

Electromagnet

This arrangement is a standard for creating electromagnets.

The magnetic field can be switched on or off by switching the current on or off.

If a current carrying wire is wound to a coil then the magnetic fields of the individual windings will be combined to a common stronger magnetic field.

FOR TRAINING PURPOSES ONLY!

© Lufthansa Technical Training

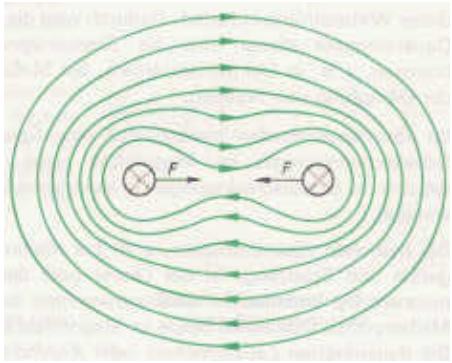

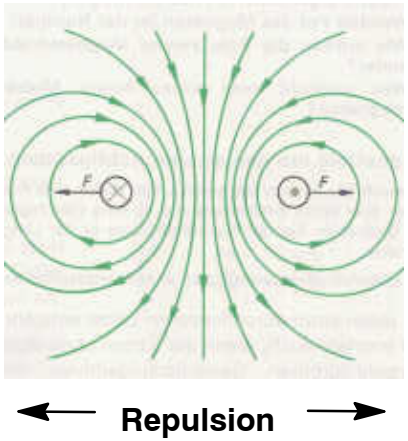

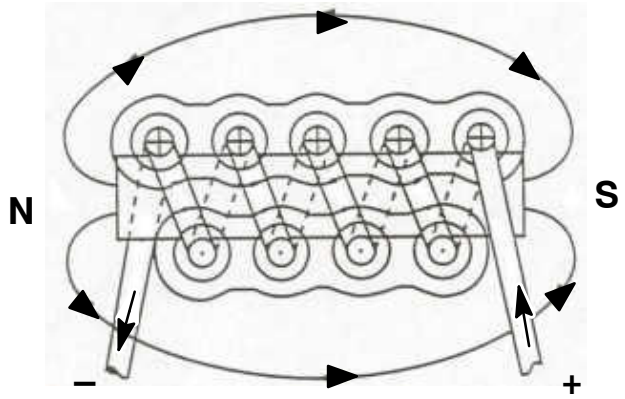

Figure 84 Summation of Magnetic Fields

FOR TRAINING PURPOSES ONLY!

© Lufthansa Technical Training

MAGNETOMOTIVE FORCE

General

In a current carrying conductor the current is the cause of a “magnetomotive force“. This force may also be called “magnetic potential“.

The magnetomotive force is the force which causes the magnetic field around the conductor.

In a coil several current carrying conductors cause the field.

The total field results from the total current multiplied by the number of turns.

Symbol for Quantity and Unit

The symbol for the magnetomotive force is Θ (theta).

The magnetomotive force is measured in amperes (A).

Formula

In a coil the magnetic field in each winding is effective. There is a summation of the effect. By this, the current in the conductor must be multiplied by the number of windings.

$$\Theta = I \times N \ [A]$$

I = current

N = number of windings

This formula is for coils in form of a cylinder.

FOR TRAINING PURPOSES ONLY!

© Lufthansa Technical Training

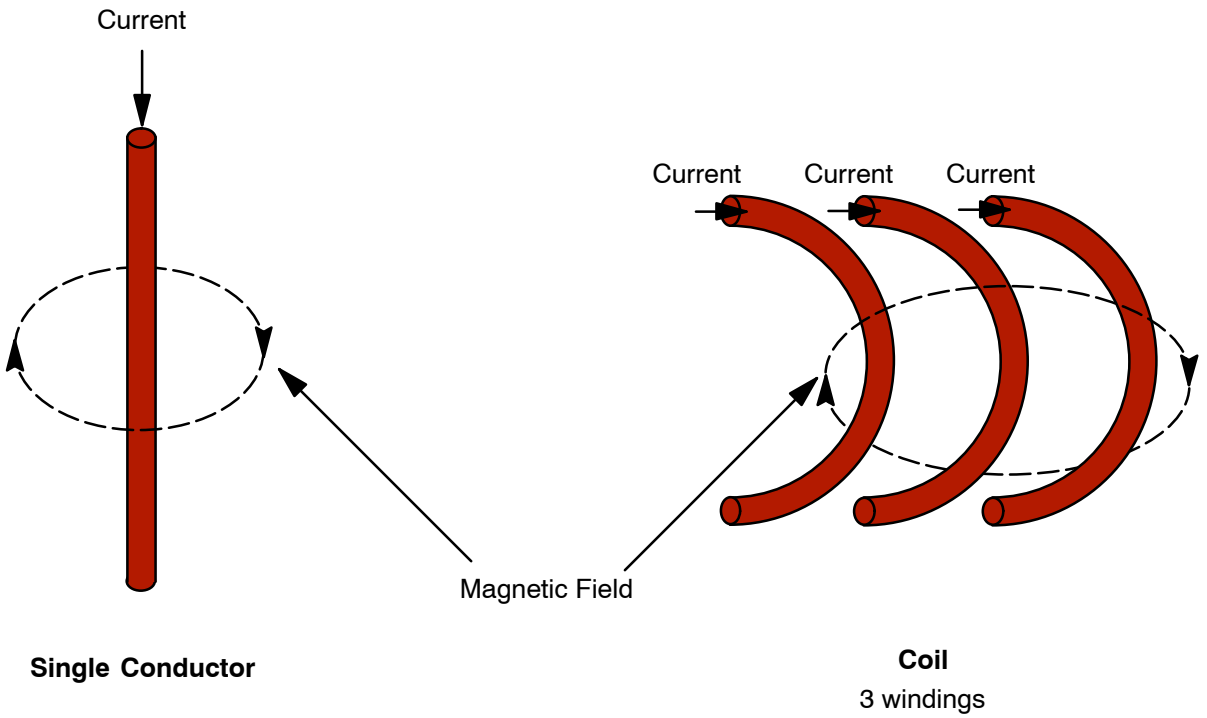

Figure 85 Magnetomotive Force

FOR TRAINING PURPOSES ONLY!

© Lufthansa Technical Training

MAGNETIC FIELD STRENGTH

General

The magnetomotive force produces a magnetic field in a coil.

Field Strength

The magnetic field is stronger the shorter the coil is. This is true when the current and the number of windings are constant.

If the field lines have a long way to go, the magnetic field is weak.

The magnetic field is stronger the shorter the field lines are.

Symbol for Quantity and Unit

The symbol for the magnetic field strength is H.

The magnetic field strength is measured in amperes per meter: $\frac{A}{m}$.

Formula

The magnetomotive force is related to the average length of a field line. This length depends on the construction of the coil.

$$H = \frac{\Theta}{l} = \frac{I \times N}{l}$$

FOR TRAINING PURPOSES ONLY!

© Lufthansa Technical Training

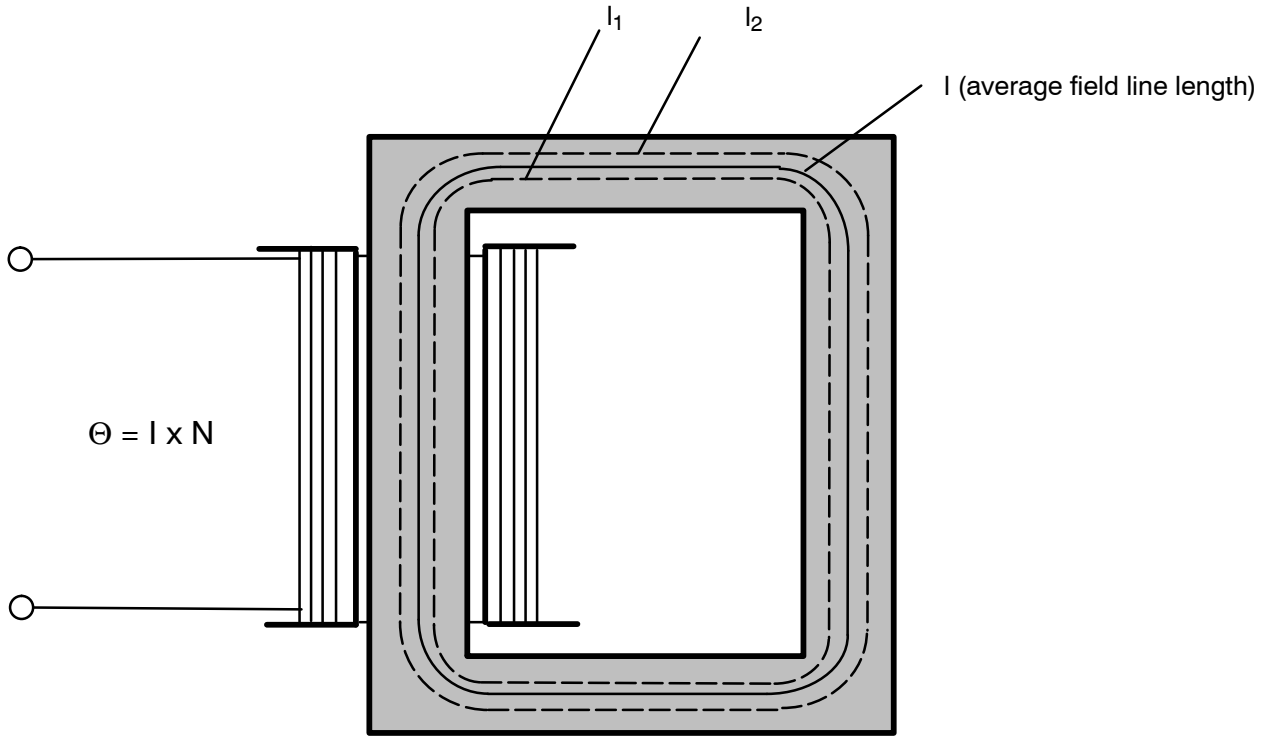

Coil with ferromagnetic core for the field lines

Figure 86 Magnetic Field Strength

FOR TRAINING PURPOSES ONLY!

© Lufthansa Technical Training

PERMEABILITY

General

The magnetic field in a coil can be increased when a ferromagnetic material is inserted into the hollow space of the coil.

This core must have a good conductance for magnetic field lines. This is called permeability.

The permeability depends on the material.

Relative Permeability

The relative permeability μ_r shows the ability of a material to conduct magnetic field lines.

μ_r is the Greek μ (small letter Mu, known from micrometres) with the indexed r (r for relative).

As a reference vacuum is used having the permeability 1.

When regarded in detail, air has the relative permeability 1,0000004. For calculations this difference is negligible.

Symbol for Quantity and Unit

The symbol for permeability is μ (mu).

The permeability is measured in volts by second per ampere per meter $\frac{V\,s}{A\,m}$.

Types of Magnetic Material

Ferromagnetic materials have a relative permeability which is much higher than the permeability of the vacuum.

Paramagnetic materials have a permeability which is nearly the same as the permeability of air or the vacuum.

Diamagnetic materials have a permeability which is much smaller than the permeability of the vacuum.

Dependency on Field Strength

The relative Permeability of a material is not the same under all conditions.

The permeability is constant if the material is not exposed to a magnetic field. This is called the “initial permeability“ of a material.

If the magnetic field strength H increases, the permeability also increases, but only up to a certain point (maximal permeability). If the field strength increases, then the permeability decreases. If the field strength increases more, the permeability will decrease below the initial permeability.

FOR TRAINING PURPOSES ONLY!

© Lufthansa Technical Training

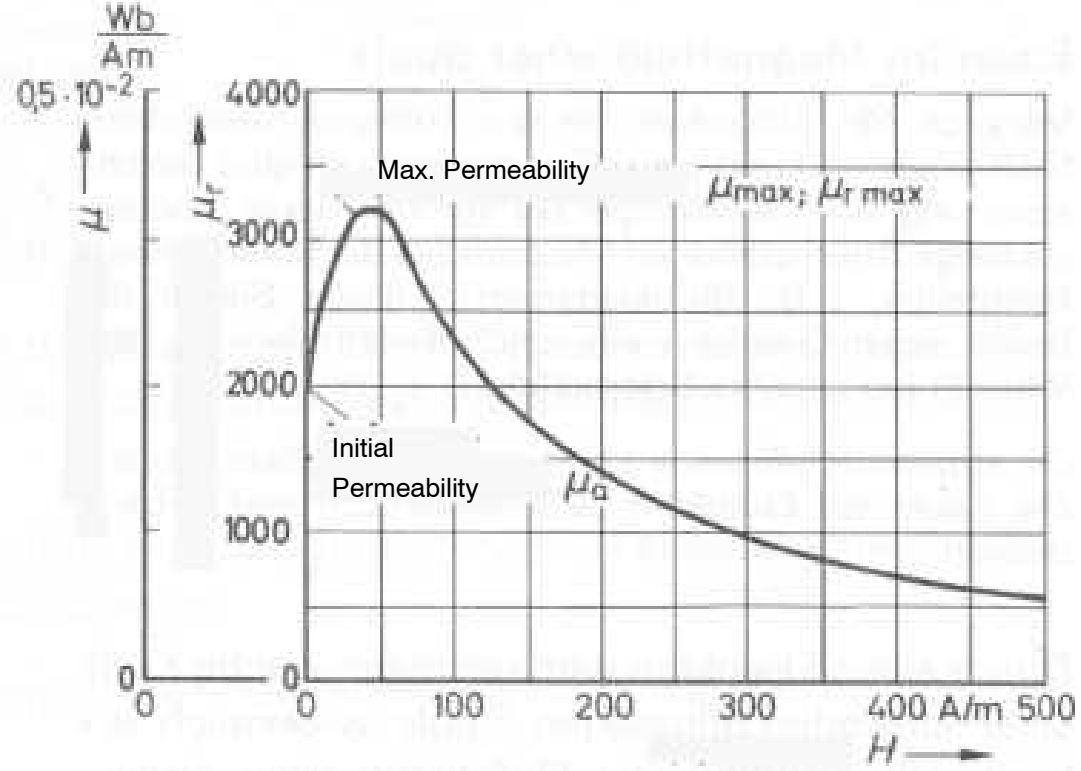

Figure 87 Permeability

FOR TRAINING PURPOSES ONLY!

© Lufthansa Technical Training

MAGNETIC FLUX DENSITY

General

The stronger the magnetic field strength is, the higher is the density of magnetic field lines. These lines are also called magnetic flux lines.

The flux density is the density of the magnetic flux lines in a coil. Therefore the flux density is a measure for the energy density in the coil.

The flux density depends directly on the strength of the magnetic field. The permeability is included in the magnetic flux density.

Symbol for Quantity and Unit

The symbol for the magnetic flux density is B.

The magnetic field strength is measured in Tesla: T .

Formula

$$B = H \times \mu$$

FOR TRAINING PURPOSES ONLY!

© Lufthansa Technical Training

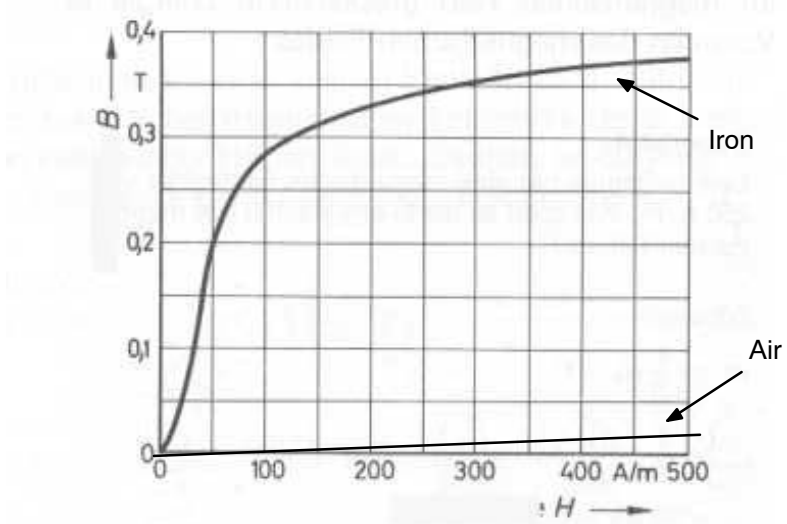

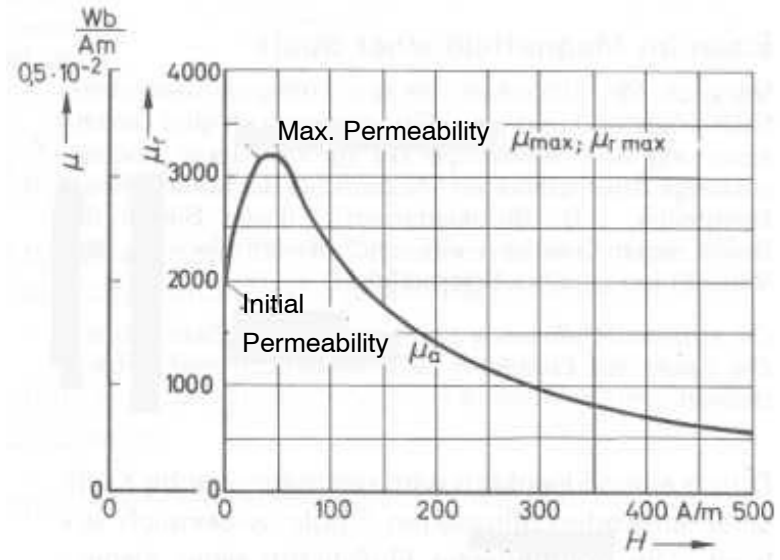

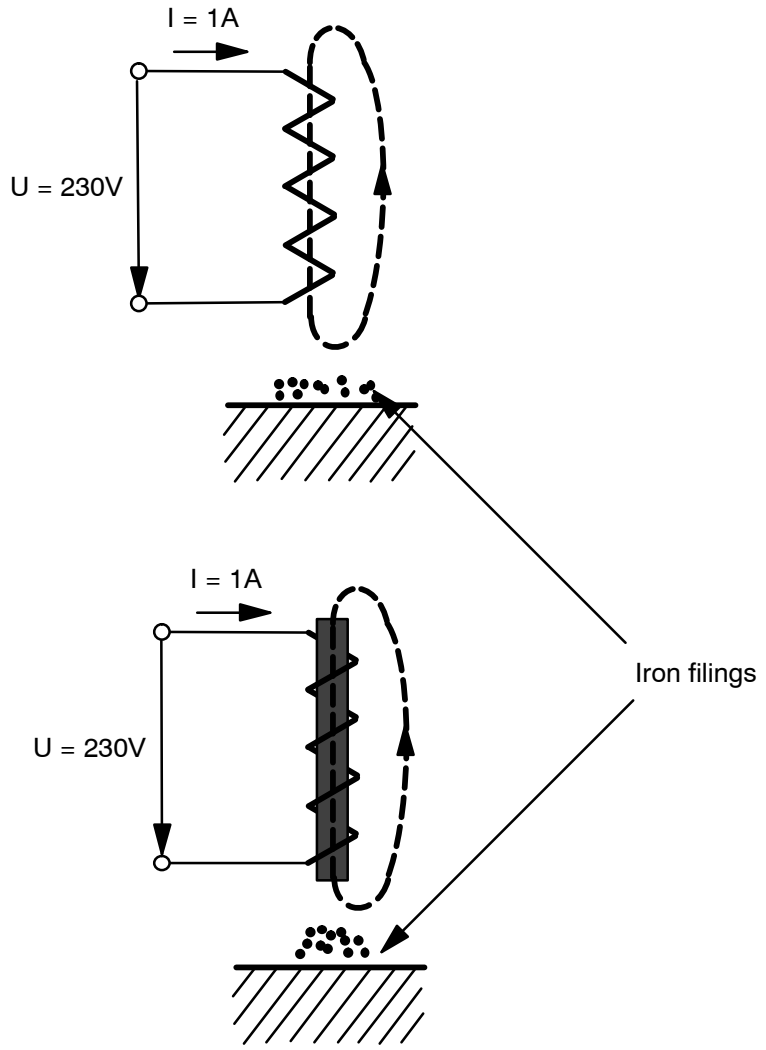

Figure 88 Magnetic Flux Density

FOR TRAINING PURPOSES ONLY!

© Lufthansa Technical Training

MAGNETIC FLUX

Effect of a Magnet

The overall effect of a magnet can be calculated by multiplying the magnetic flux density B with the pole area A.

The result is then the magnetic flux ϕ (phi).

Symbol for Quantity and Unit

The symbol for the magnetic flux is ϕ (capital letter phi).

The magnetic field strength is measured in Weber: Wb .

Instead of Weber, the volt-seconds (V s) are used sometimes. 1 Wb = 1 V s.

Formula

$$\Phi = B \times A$$

FOR TRAINING PURPOSES ONLY!

© Lufthansa Technical Training

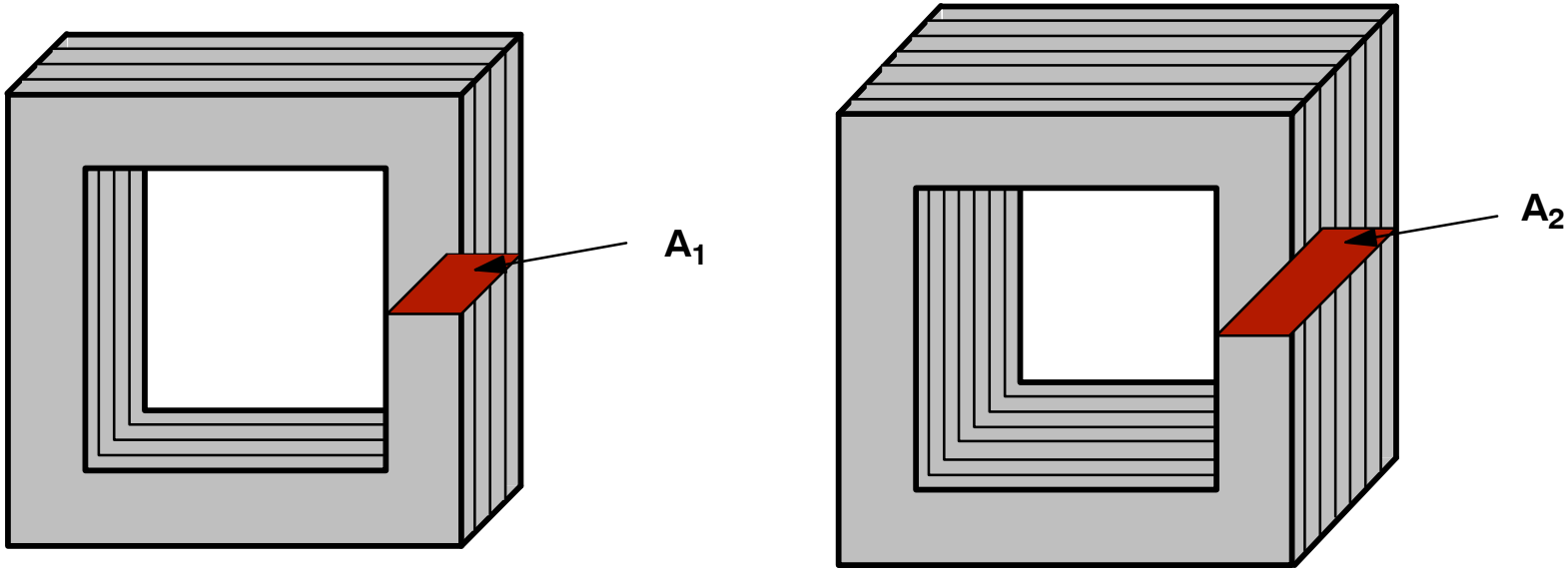

$$B_1 = B_2$$

$$A_1 < A_2$$

$$\Phi_1 < \Phi_2$$

Figure 89 Magnetic Flux

FOR TRAINING PURPOSES ONLY!

© Lufthansa Technical Training

ELECTROMAGNET

Construction

An Electromagnet consists of an iron core and windings of a lead. This is called a coil.

The iron core may be straight or curved. If it is formed like a horse shoe or an U, both poles have an effect in the same direction.

It can be operated with direct current. Then the magnetic polarity is constant.

If operated with alternating current, the magnetic polarity changes continuously.

Function

The current causes, depending on the number of windings, a magnetomotive force.

$$\Theta = I \times N$$

The magnetic field strength depends on the length of the coil. It should be as short as possible.

$$H = \frac{\Theta}{l} = \frac{I \times N}{l}$$

The effect of an electromagnet will be increased if a ferromagnetic material (normally iron) is inserted as a core. Then the flux density will increase.

$$B = H \times \mu = \frac{I \times N \times \mu}{l}$$

To find out the total effect of a magnet, just multiply the flux density by the area A of the pole. The result is the magnetic flux Φ (phi).

$$\Phi = B \times A = \frac{I \times N \times \mu \times A}{l}$$

FOR TRAINING PURPOSES ONLY!

© Lufthansa Technical Training

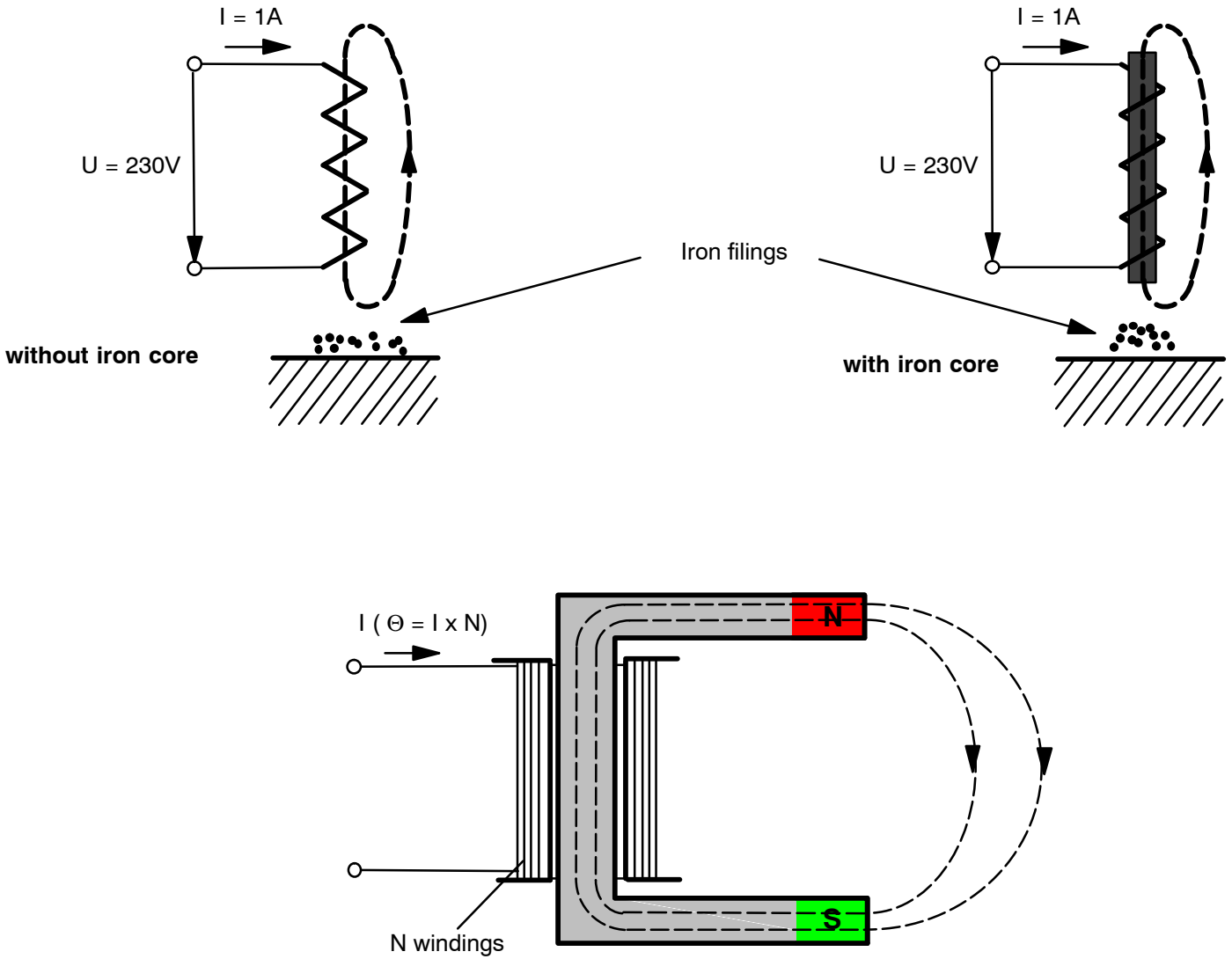

Figure 90 Electromagnet

FOR TRAINING PURPOSES ONLY!

© Lufthansa Technical Training

SATURATION POINT

General

As the core of an inductor can only carry a certain amount of magnetic field one can say that its flux density is limited. The maximum flux density is dependant from the material of the core. If all the small magnets inside the core are aligned (Weiss domains) the maximum flux density is reached.

This is called Saturation Point.

Excessive Field Lines

Additional magnetic field can not be conducted by the core so the rules of the surrounding air do apply for that surplus of magnetic field. This is because the excessive field lines are conducted by the air around the inductor.

FOR TRAINING PURPOSES ONLY!

© Lufthansa Technical Training

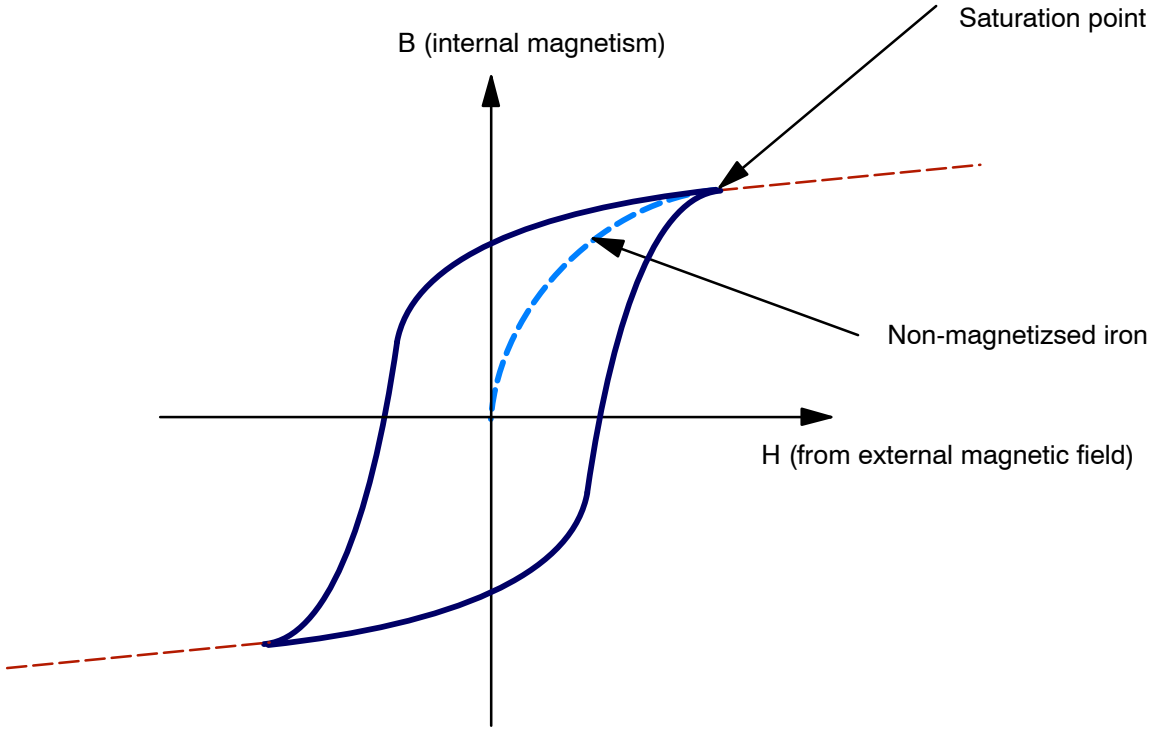

Figure 91 Saturation Point

FOR TRAINING PURPOSES ONLY!

© Lufthansa Technical Training

MAGNETICABILITY OF MATERIALS

General

Depending on the material it can be rather easy or difficult to magnetize (or demagnetize) a component. This characteristic can be seen from the field strength that is required to magnetize (demagnetize).

Materials that are difficult to magnetize (demagnetize) are called magnetically hard. Materials that are easy to magnetize (demagnetize) are called magnetically soft.

Retentivity

The magnetism remaining within the iron even without an external magnetic field is called retentivity.

An other word for retentivity is remanence.

Coercitive Force Reluctance

The magnetic field strength requires to eliminate the magnetic flux within the iron core is called Coercitive Field Strength.

This field strength is necessary to overcome the reluctance of the retentive material when it shall be fully demagnetized.

Hysteresis Loop

Since the magnetic flux density B does not only depend on the magnetic field strength H but also from the magnetization of the material and the polarization of its magnetization this will result in a hysteresis loop.

FOR TRAINING PURPOSES ONLY!

© Lufthansa Technical Training

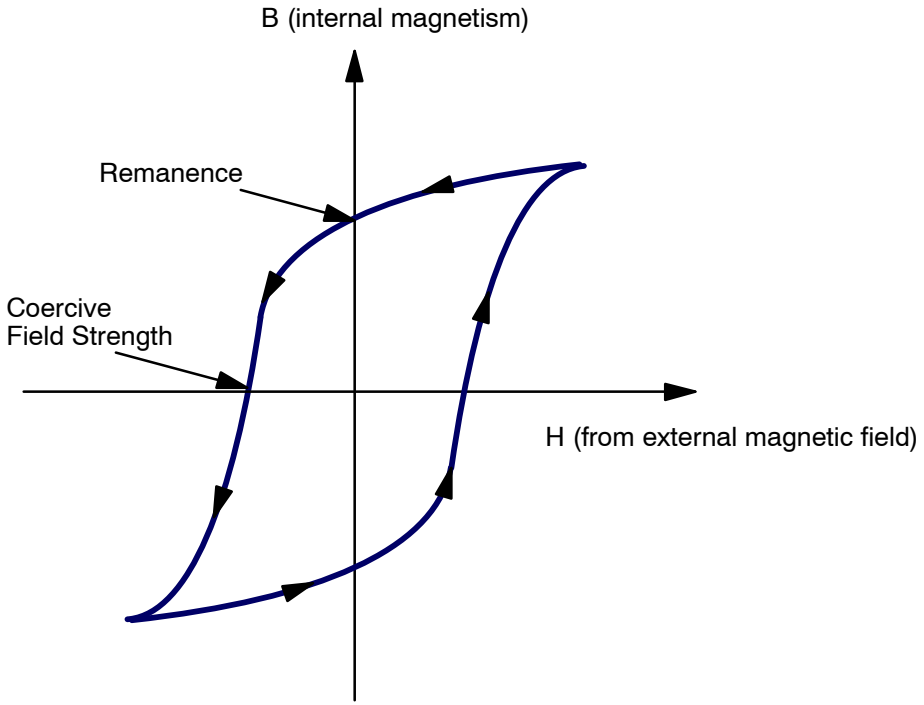

Hysteresis loop of magnetically hard materials

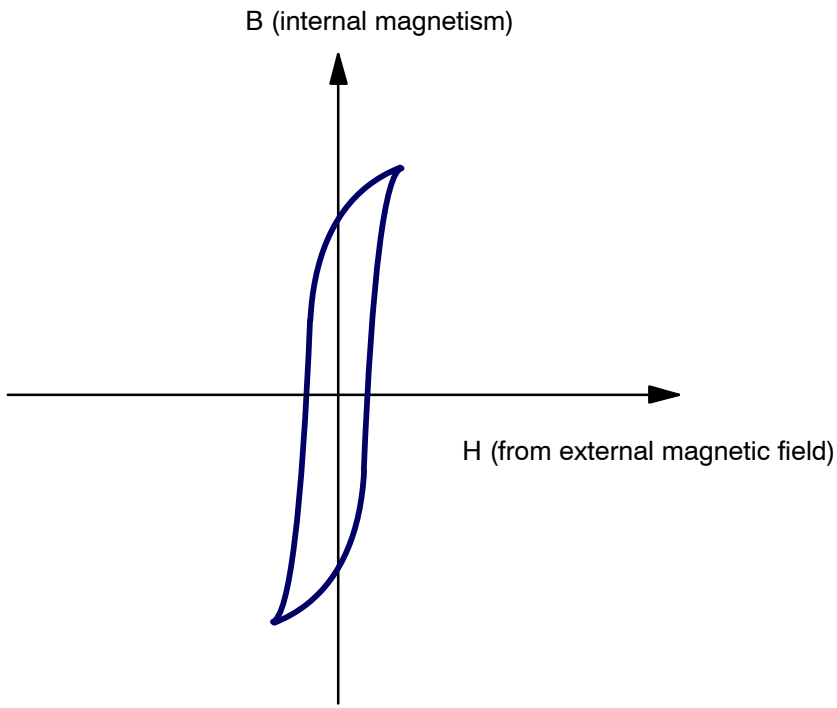

Hysteresis loop of magnetically soft material

Figure 92 Hysteresis Loops

FOR TRAINING PURPOSES ONLY!

© Lufthansa Technical Training

M3.11 INDUCTANCE/INDUCTOR

INDUCTION OF MOTION

Basic principle

A conductor is moved at a right angle to a magnetic field. As long as the conductor is moved through the magnetic field a voltage is generated (induced) in the conductor.

As the electromagnetic induction is also the basis for electrical generators, we talk about the generator principle.

The size of the induced voltage depends on:

- magnetic flux density: B
- effective length of the coil (number of turns of the coil): l
- speed of motion of the conductor or of the magnet relative to the magnetic field: v

Formula

The voltage induced can be calculated like this:

$$u_i = B \times l \times v$$

The direction of the induced voltage depends on the direction in which the conductor is moved and on the direction of the magnetic field.

Generator and Transformer use the same basic principle:

Altering the amount of magnetic Flux.

The only difference is in how the Flux is altered. In a generator with cycling conductor, the magnetic flux density B is constant, but the conductor does not always move at a right angle to that field.

Law of Induction

In common, the voltage induced is calculated like this:

$$u_i = N \times \frac{d\phi}{dt}$$

In a, generator with a constant field and a rotating conductor the movement of the conductor relative to the magnetic field is not constant. Soon it will not move at a right angle to that field but more and more parallel to it. Then, it will move at a right angle again, but with opposite direction.

By this, the effective magnetic flux changes within a certain time.

FOR TRAINING PURPOSES ONLY!

© Lufthansa Technical Training

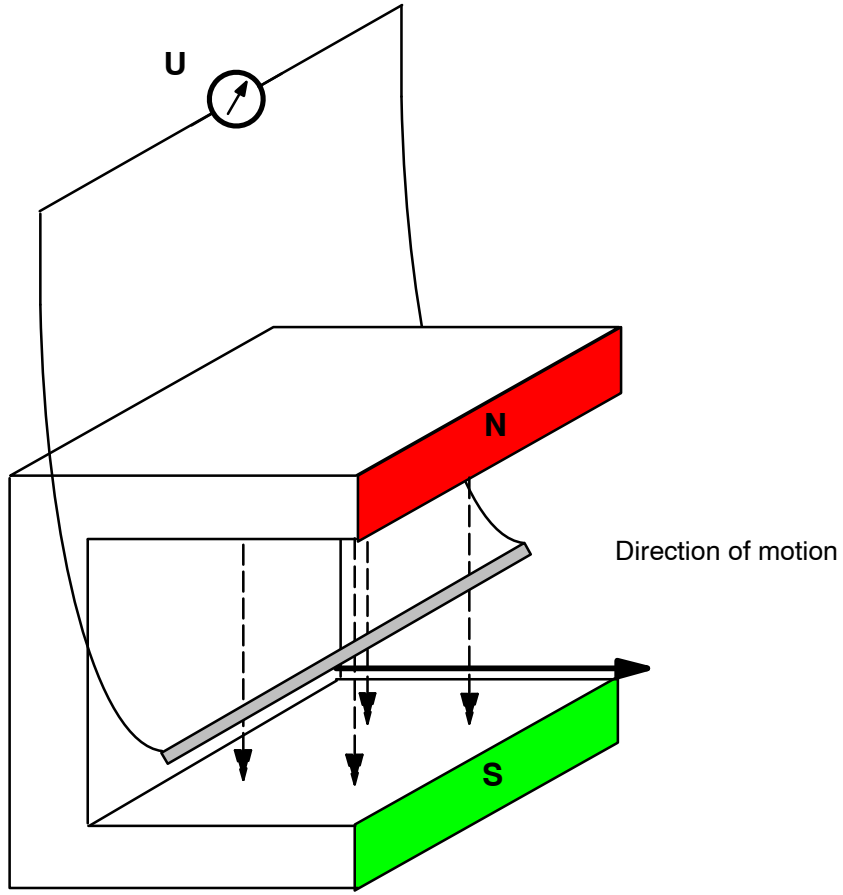

Power generation by moving the conductor in the magnetic field

Figure 93 Induction of Motion

FOR TRAINING PURPOSES ONLY!

© Lufthansa Technical Training

LENZ'S LAW AND POLARITY

General

It is possible to find out, which polarity a induced voltage has. The voltage will cause a current flow from the positive to the negative pole (technical current flow).

When an inducted current flows forces will appear which can be calculated with the Lenz's law.

Right–Hand Rule

Open your right hand, held in such a way that the flux lines coming from the north pole hit the palm and thumb pointed in the direction of the conductor movement. Now the fingers show the direction of the induced current (conventional current flow and thus induced voltage).

Lenz's Law

When moving the conductor through a magnetic field, a voltage is induced in the conductor. As a result a current arises. This current will produce a magnetic field around the conductor which then overlays the pole field.

The field around the conductor is aligned in such a way that the common (resultant) field becomes denser in front of the conductor (figure 2). Therefore the resultant field opposes the relative motion of the conductor.

The current caused by an induced voltage is always such that it opposes the cause of the induction.

FOR TRAINING PURPOSES ONLY!

© Lufthansa Technical Training

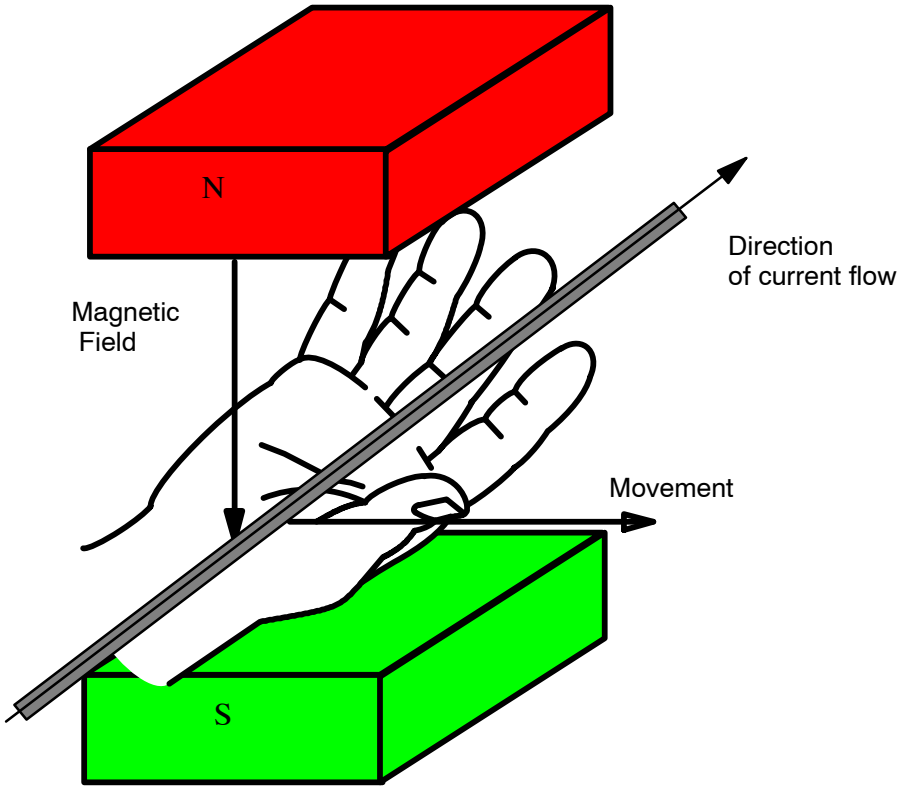

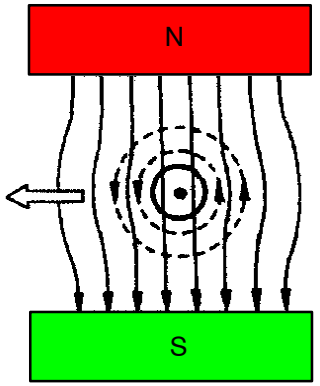

Figure 1

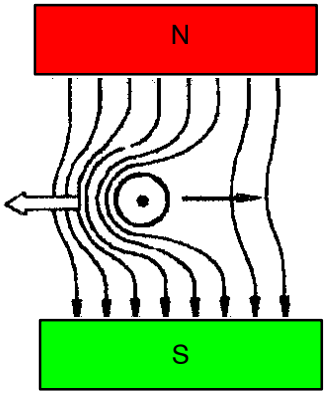

Figure 2

Figure 94 Lenz's Law

FOR TRAINING PURPOSES ONLY!

© Lufthansa Technical Training

COILS

Construction

A coil consists of wire windings which are either self−supporting or wound on a coil core.

The magnetic properties of a coil can be influenced by coil cores (ferro-magnetic materials).

Number of Windings

The number of turns of a lead around the core is the number of windings.

The symbol for quantity is N.

The Inductance of Coils

The mechanical arrangement of a coil has an influence on the magnetic field and therefore on the inductance as well.

Relevant Parameters are:

- the permeability μ, which depends on the material inside the coil e.g. an iron core
- the cross-sectional area A, which depends on the diameter of the coil and
- the average length of the magnetic lines of force, which depends on the length of the coil.

All these parameters together form the constant of the inductor A_L. Together with the amount of turns it forms the inductivity of the coil. It is an indicator on how strong the coil reacts on the change of the magnetic flux. The Unit is H (Henry).

- Regarding a coil at AC voltage, the self−induced voltage reduces the current consumption. The faster the magnetic field changes (frequency f) and the higher the inductance (symbol L), the higher the self−induced voltage will be.
- A coil has an inductance (L) of 1 H (Henry) when current flows through the coil, changing at the rate of one ampere per second, this induces one volt across the coil.
- The efficiency of a coil and thus its inductance depends on the square of the number of turns (N^2), the permeability μ (magnetic conductivity of iron), the cross−sectional area A and the average length of flux lines.

Symbol for Quantity and Unit

The symbol for inductance is L .

The inductance is measured in Henry (H).

Formula

$$L = \frac{N^2 \times \mu \times A}{l}$$

μ : Permeability in $\frac{Vs}{Am}$

N: Number of Turns

l: average Length of the Lines of Force

A: Cross-sectional Area in m^2

FOR TRAINING PURPOSES ONLY!

© Lufthansa Technical Training

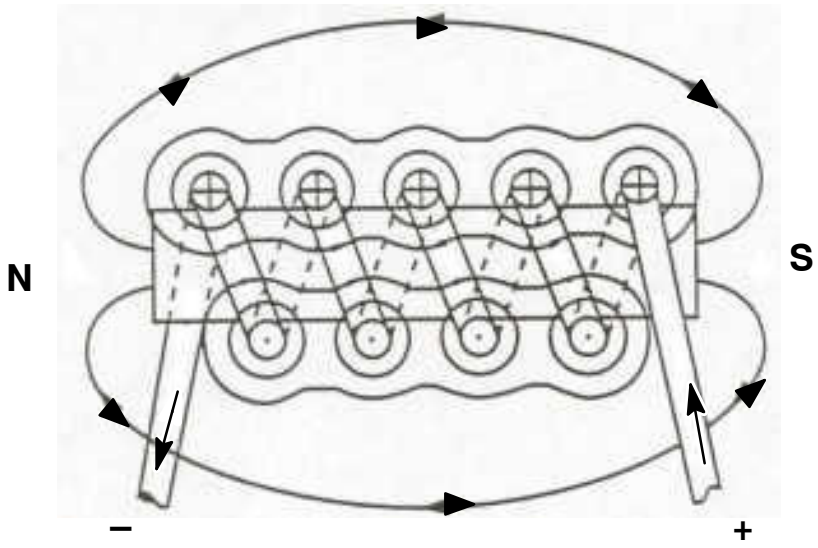

Coil

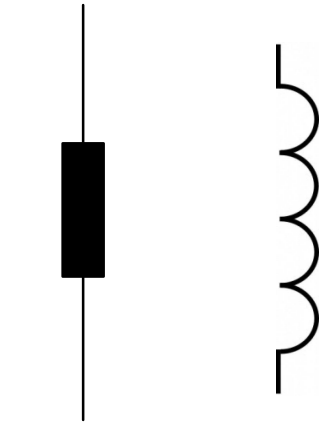

European American

Wiring Symbol

Figure 95 Coil

FOR TRAINING PURPOSES ONLY!

© Lufthansa Technical Training

MUTUAL INDUCTION

Transformer Principle

Two coils are wound around a common soft magnetic iron coil core but have no electrical connection (figure).

If the current in the first coil (voltage applied/field–producing) changes, the strength of the magnetic field established by this coil changes too.

The second coil (voltage–producing) is now in a changing magnetic field. This change causes a current in the second coil. The higher the rate of change of the primary current the higher the rate of change of the magnetic field will be thus creating a higher force exerted to the electrons inside the secondary winding resulting in higher voltage. The more windings are on the secondary coil the more electrons can be influenced over a longer distance resulting in higher voltages in the secondary winding.

According to Lenz's Law the current acts opposite to the cause trying to reduce the current in the primary winding.

Induced Voltage

The induced voltage depends on three items:

- Amount of current change
- Rate of current change (frequency)
- Effective length of conductor (number of turns)

Faraday's Law

According to Faraday the induced voltage is calculated by the change of the magnetic flux within a certain span of time. The number of windings is also important.

- U = induced voltage
- N = number of windings
- Φ = magnetic flux
- t = time

$$U = -N \times \frac{d\Phi}{dt}$$

Permeability

The iron core has an effect on the voltage as well, because it must "conduct" the magnetic field. The higher the permeability (magnetic conductivity) of the iron core the higher the induced voltage in the secondary coil.

Position of the Coils

To achieve maximum efficiency the magnetic field from the primary winding must completely go through the secondary winding. Here the iron core is used as well as the arrangement of the windings on the core itself.

Usually they are arranged concentrically to prevent flux losses.

The effect of the rate of change on the induced voltage is used in synchros

Coil Design

The higher the frequency the smaller the components can be at the same voltage.

FOR TRAINING PURPOSES ONLY!

© Lufthansa Technical Training

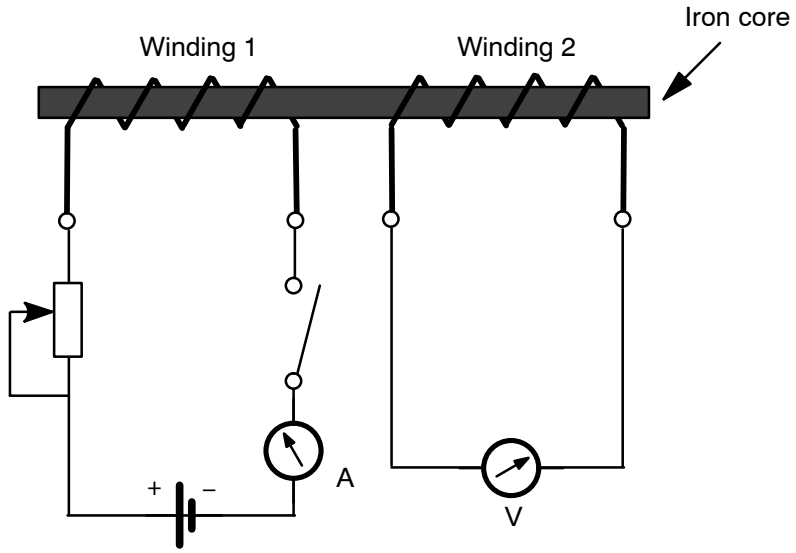

Voltage generation by changing of current flow

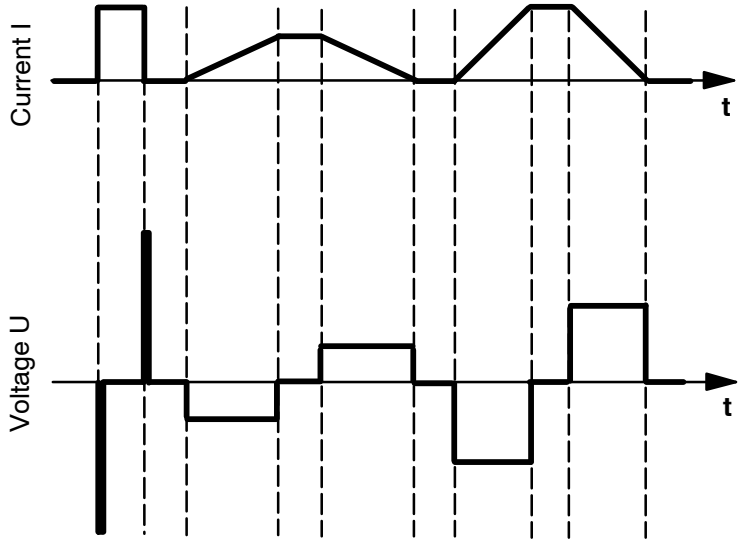

Graphical representation of the current changes and the resultant voltages

Figure 96 Mutual Induction

FOR TRAINING PURPOSES ONLY!

© Lufthansa Technical Training

CURRENT TRANSFORMER CT

General

Current transformers, in short CT, are single–, two– and three–phase current measuring transformer.

They allow the measurement of AC currents without breaking the current–carrying leads.

The primary side (input line or feeder line) is the current–carrying lead. The secondary side is the coil on the iron core. The current is now stepped from the input coil down to the output coil according to the transformer ratio between input and output coil.

Danger of Damage

Ct's must always have a load (ammeter). Otherwise a voltage of 100 000 V would be applied, if the terminals are open.

Moreover, the CT would become to hot and then destroy itself.

FOR TRAINING PURPOSES ONLY!

© Lufthansa Technical Training

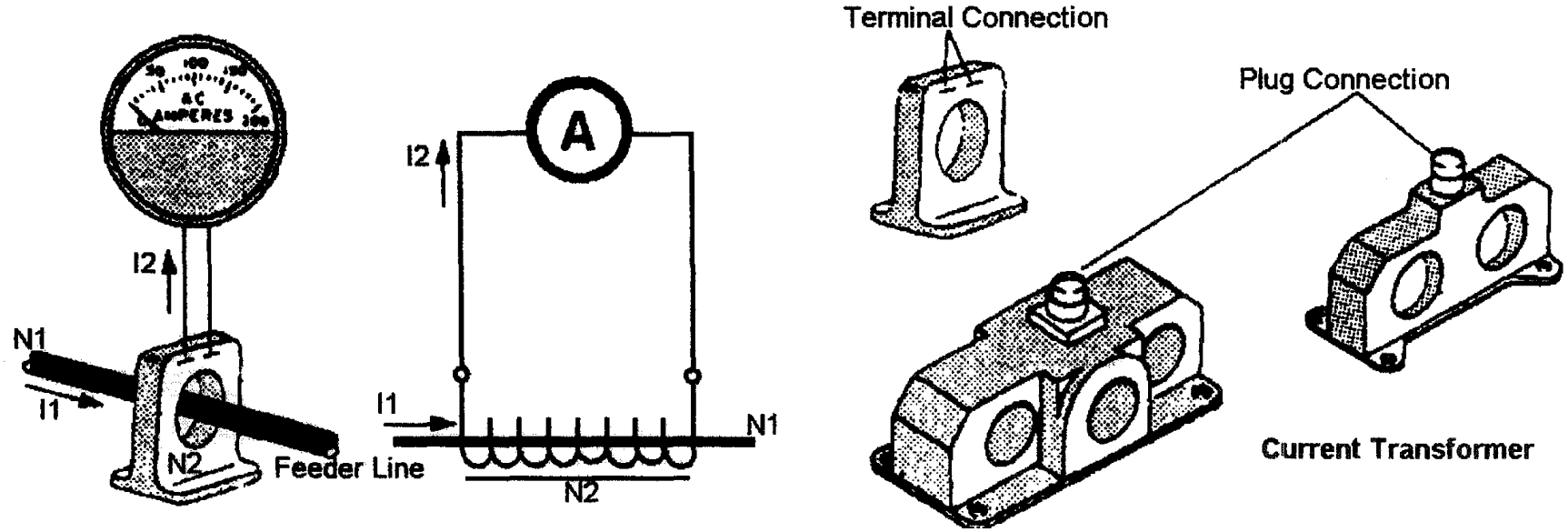

Figure 97 Current Transformer

FOR TRAINING PURPOSES ONLY!

© Lufthansa Technical Training

POSITION OF COILS

GENERAL

The angle between the coils has a big influence on the voltage which is induced in the second coil. The angle depends on the position of the coils.

Example

Coil 1 generates a magnetic flux which changes permanently. This is done be feeding coil 1 with AC.

By rotation of coil 2 the angle changes.

As a result, the voltage changes.

Coil 2 = 0°

If the angle is 0° the magnetic flux which is generated by coil 1 will hit coil 2 in an optimal way.

Coil 2 will have the maximum possible voltage.

Coil 2 = 45°

If the angle is 45° the magnetic flux which is generated by coil 1 will not hit coil 2 in an optimal way.

Coil 2 will have a lower voltage.

Coil 2 = 90°

If the angle is 90° the magnetic flux which is generated by coil 1 will not hit coil 2 at all.

Coil 2 will have a no voltage.

Coil 2 = 180°

If the angle is 180° the magnetic flux which is generated by coil 1 will hit coil 2 in an optimal way again.

Since the winding of coil 2 is reversed compared to the 0°position the voltage is reversed, too. This effect of phase shift will happen when coil 2 is turned more than 90°.

APPLICATION

This effect is used in synchros. Coil 2 is fixed to rotating parts. So for each angle a different voltage is generated which can be used in an indicator.

CONSTRUCTION

Synchros are used in aircraft very often.

FUNCTION

Coil 1 is normally supplied with 26 V AC. Since it rotates, it is the rotor.

Coil 1 of the transmitter is mechanically linked to the rotating device which is to be monitored.

Coil 2 exists three times: S1, S2 and S3. These three coils are installed in an angle of 120° to each other. They are fixed and therefore called stator coils.

Since there is no position with the optimal angle to all three stator coils at the same time, the three stator coils will have a different voltage.

The receiver has also three stator coils. These coils will have the same voltage as the related coil in the transmitter.

As a result, the rotor of the receiver will turn to the same angle as the rotor in the transmitter. When a pointer is connected to that rotor, you have an indicator.

FOR TRAINING PURPOSES ONLY!

© Lufthansa Technical Training

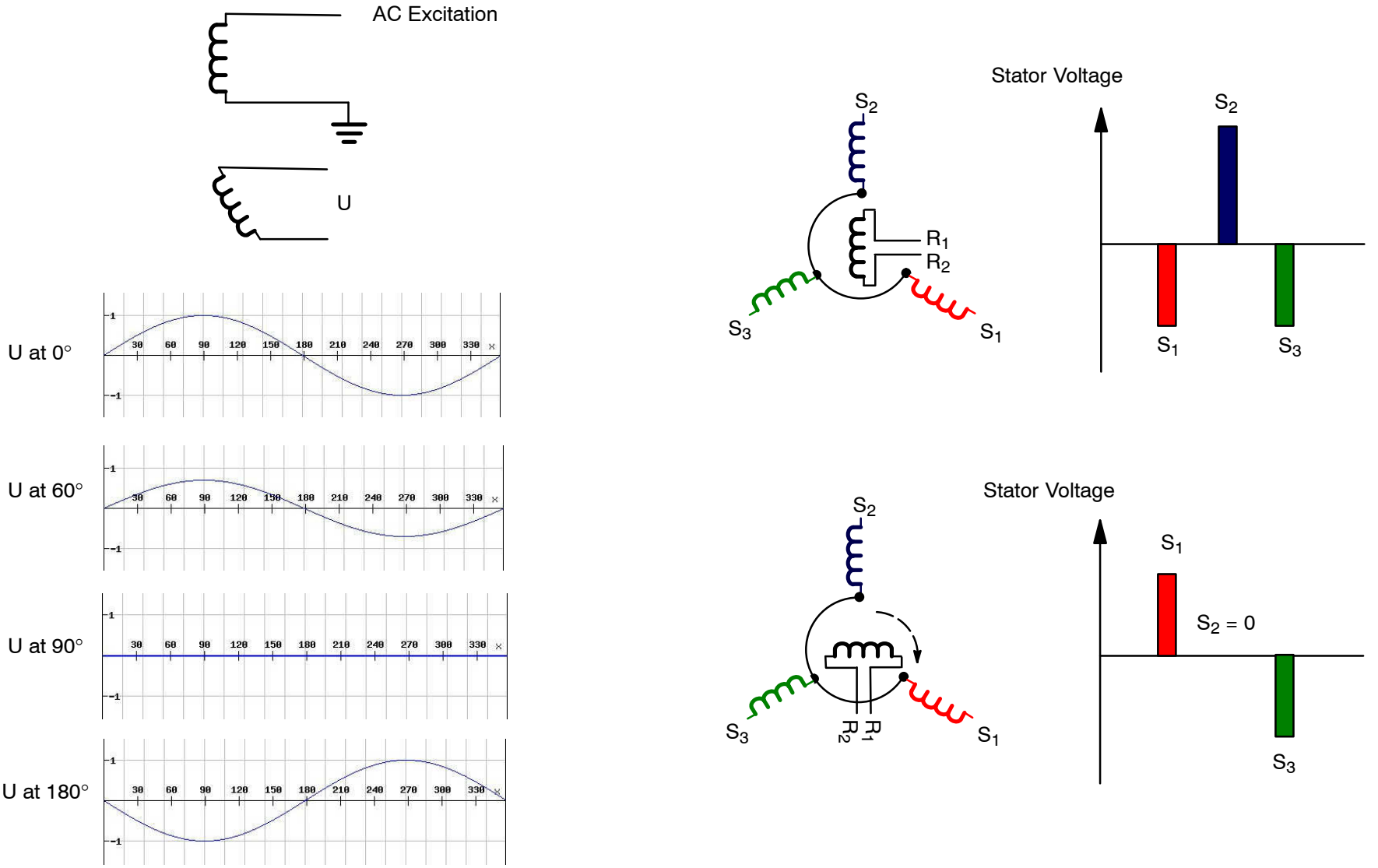

Figure 98 Position of Coils

FOR TRAINING PURPOSES ONLY!

© Lufthansa Technical Training

SELF–INDUCTION

Change of Magnetic Flux

After switching on the coil, the current does not immediately reach its maximum value because, at first, the current takes some time to establish the magnetic field.

This field change causes a self–induced voltage, directed in such a way that it delays the establishment of the magnetic field.

After the current has been switched off, the magnetic field of the coil will decrease. This process also causes a self–induced voltage. Again the polarity of the voltage is such that the coil current continues to flow in the same direction and falls only slowly down to zero.

Therefore the reduction of the magnetic field delays (Lenz's Law).

Switching Off of Inductors

When switching off coils, special caution is needed. At the moment of switching off the coil, the current change is extremely high, i.e. the change of the magnetic field is very rapid and very high. Therefore a collapsing magnetic field will, for a short time, induce a large amount of energy in the coil.

If there is no passage for the induced current, an extremely high voltage will arise. This voltage can be ten times higher then the voltage originally applied.

Free Wheeling Diodes

As a precaution, so–called free wheeling diodes are often integrated parallel to the coil. In normal operating mode they are poled in reverse direction. When switching off, the voltage is opposite. Therefore the diodes are in forward direction and the energy of the magnetic field can flow off.

Ignition Coils

However, sometimes high voltages are intended, e.g. in the ignition coil of a car.

FOR TRAINING PURPOSES ONLY!

© Lufthansa Technical Training

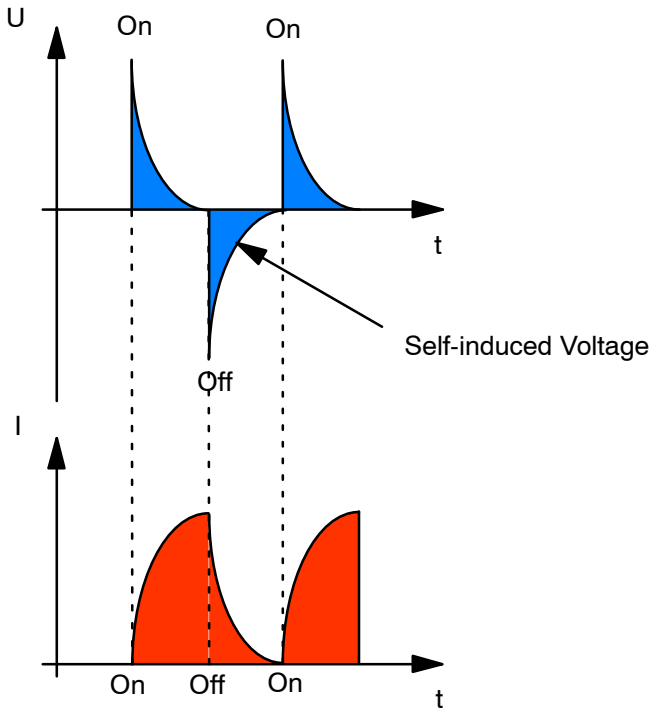

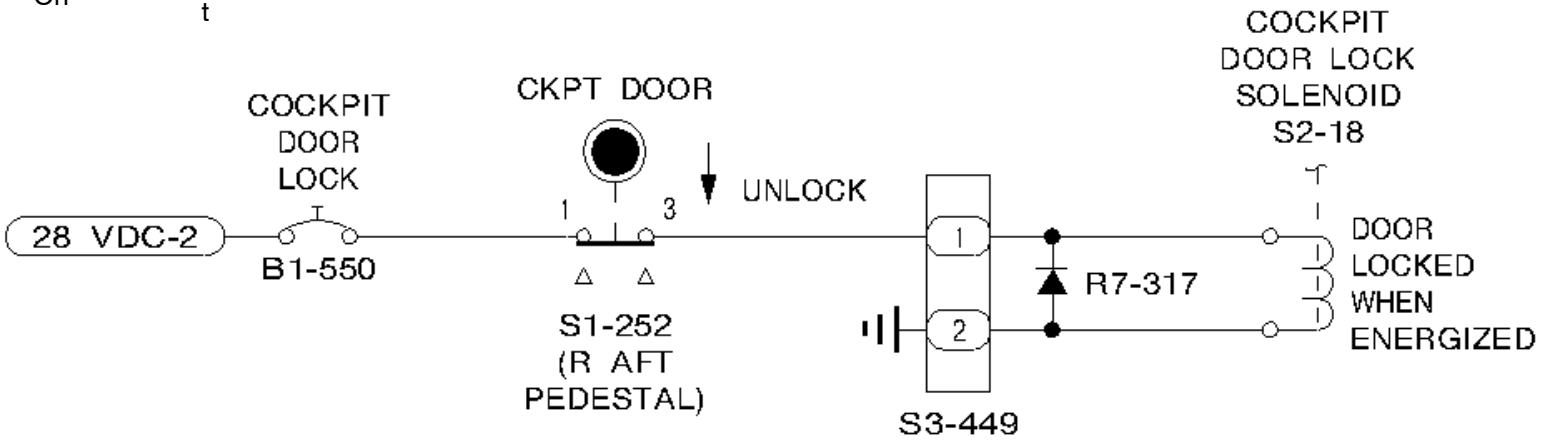

MD11 SSM

Figure 99 Self-Induction

FOR TRAINING PURPOSES ONLY!

© Lufthansa Technical Training

M3.13 AC THEORY

INTRODUCTION

General

Alternating current is the type of current that is used in the mains supply in the field of power engineering.

In communications engineering both AC as well as DC is used.

AC/DC

The abbreviation for alternating current is AC.

The abbreviation for direct current is DC.

Direct Current

Characteristics of DC is that the current I leads the flow in the same direction at the same quantity (size) over a period of time t.

Also the voltage is constant in magnitude and polarity.

Sinus Form of Current

Very often the alternating voltage is named AC, even if the circuit is open and no current is flowing.

Every generator containing rotating parts will create a sinusodial AC. So the sinusodial waveform is the standard for AC.

Characteristics of AC is that the current I varies in direction (polarity) and in quantity in the circuit over a period of time t.

In the positive half–wave the voltage goes from the 0 reference line up to the positive peak ($+u_p$) and from $+ u_p$ down to 0. Then the voltage goes in the opposite direction and rises from 0 to a negative peak value ($-u_p$) and falls from $- u_p$ to the 0 reference line, as shown in the negative half–wave.

The polarity and current magnitude change then repeats periodically. The same applies to the voltage.

Phase

The sinusodial alternating voltage is an oscillation.

The value of the voltage changes continuously according to the form of the sinus. Each state corresponds to a certain phase of the oscillation.

PERIOD

General

The time for one cycle to complete is called cycle time T.

The positive and the negative half-wave together constitute one AC cycle.

As shown in the line chart the AC sine waveform repeats according to the cycle time T.

The graphical representation is called graph or line chart.

T is also called period of oscillation.

Symbol for Quantity and Unit

The symbol for period is T .

The period is measured in seconds (s).

FOR TRAINING PURPOSES ONLY!

© Lufthansa Technical Training

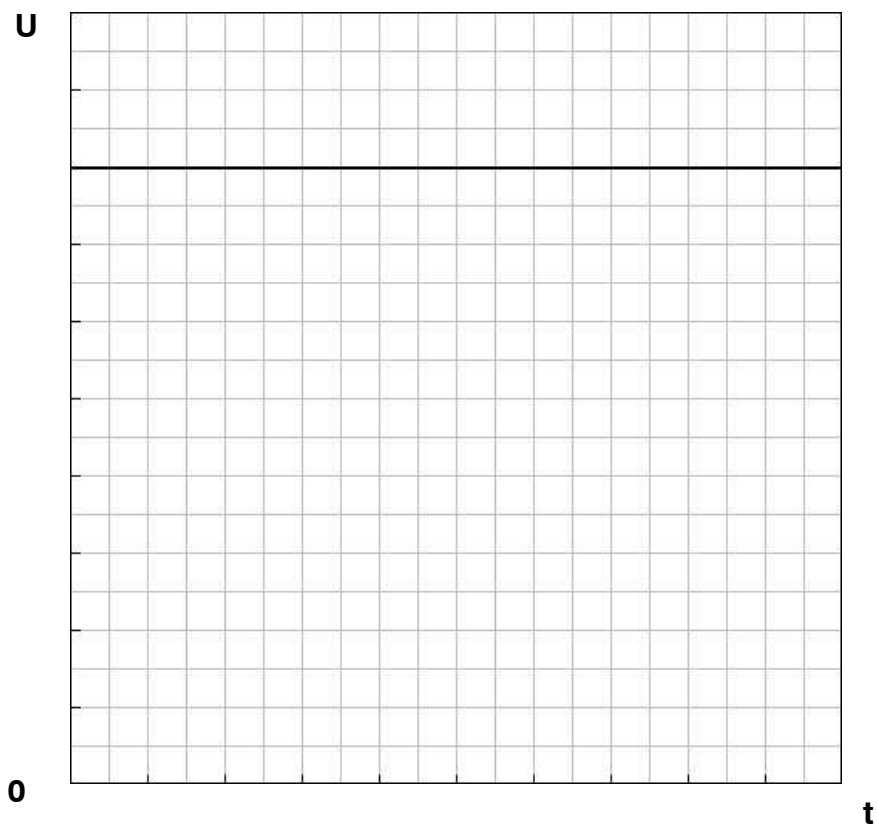

DC Voltage

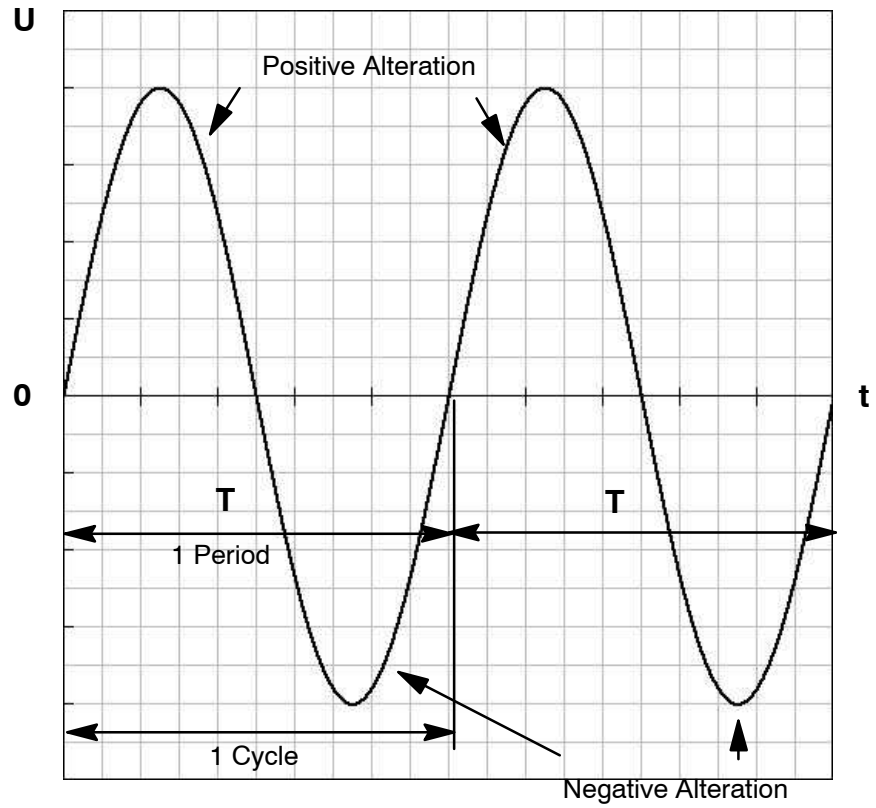

AC Voltage

Figure 100 AC/DC

FOR TRAINING PURPOSES ONLY!

© Lufthansa Technical Training

FREQUENCY

General

The frequency of AC is the number of complete cycles, i.e. oscillations, in one second.

Frequency is also defined as the reciprocal of the cycle time T.

$$\text{frequency (f)} = \frac{1}{\text{cycle time (T)}}$$

$$[f] = \frac{1}{s} = s^{-1} = Hz$$

The higher the frequency the shorter the cycle time.

The lower the frequency the longer the cycle time.

The frequency states the number of cycles completed in one second.

Symbol for Quantity and Unit

The symbol for frequency is f .

The frequency is measured in hertz (Hz).

Very often frequency is expressed in kHz, MHz or GHz.

Frequency Bands

In communication engineering, there various frequency bands.

The three most important frequency bands are:

- HF high frequency
- VHF very high frequency
- UHF ultra-high frequency.

WAVELENGTH

General

In common overhead networks the current travels at the speed of light speed.

The speed of light has a symbol for quantity: c .

$$c = 299\,792 \times 10^3 \frac{m}{s} \approx 300\,000 \frac{km}{s}$$

The distance that the electrical current travels in the cycle time T can be calculated, if either the cycle time T or the frequency f is known.

This travelled distance is called wavelength.

Symbol for Quantity and Unit

The symbol for wavelength is λ. (greek lambda).

The wavelength is measured in meters as used for distances.

Formula

$$\lambda = c \times T = \frac{c}{f} \text{ [m]}$$

FOR TRAINING PURPOSES ONLY!

© Lufthansa Technical Training

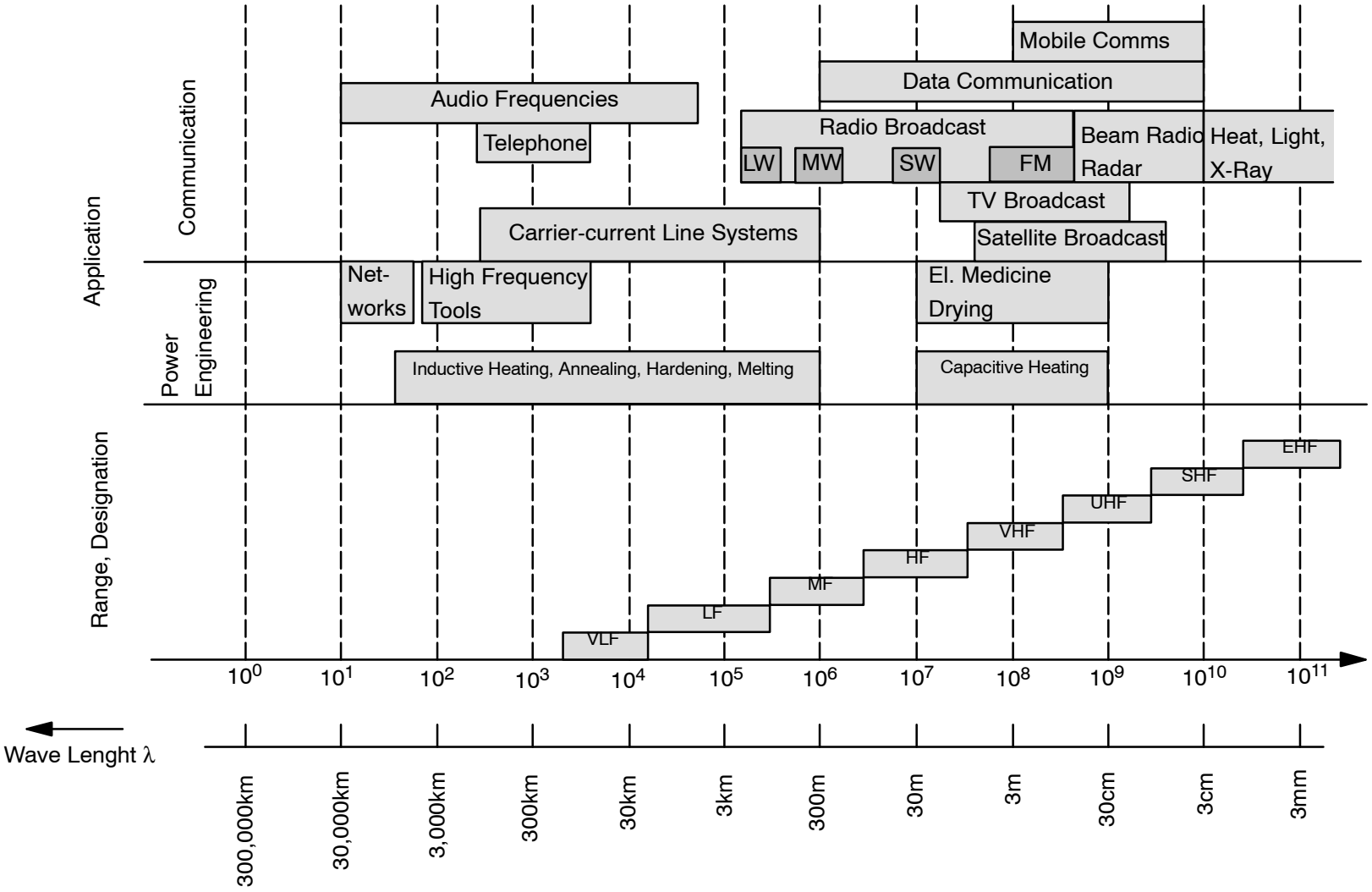

Figure 101 Frequencies and Wave Length

FOR TRAINING PURPOSES ONLY!

© Lufthansa Technical Training

AVERAGE VALUE

General

As with a perfect sine wave the positive and negative parts are identical in time shape and magnitude. So the average value of AC is Zero.

PEAK VALUE

General

The positive or negative maximum value which a sine curve can assume is called the peak value.

As shown in the two diagrams on this page, the peak values are I_{peak} for maximum current and U_{peak} for maximum voltage.

Peak Power

The peak power is calculated by multiplying the peak voltage U_{peak} with the peak current I_{peak}.

INSTANTANEOUS VALUE

Sine Wave

For the technical AC voltages and currents the instantaneous value in a certain moment when the time t is known. This time is the time since the sine wave has started.

If the peak value of the induced voltage is given, the instantaneous voltage (u), which is induced at any angle of rotation, can be calculated. The time–dependent quantities can be identified by using small letters.

Calculation

For the instantaneous voltage, the calculation is as follows:

$$u = U_{peak} \times \sin (2\pi \times f \times t)$$

u instantaneous voltage

U_{peak} peak voltage

For the current, the calculation is as follows:

$$i = I_{peak} \times \sin (2\pi \times f \times t)$$

With these formulae it is possible to calculate the trigonometric function, depending on time.

$2\pi \times f \times t = \alpha$

$\sin (2\pi \times f \times t) = \sin \alpha$

α is the angle of rotation.

Amplitude

The peak value of a wave in an AC voltage or an AC is called amplitude. It is measured from the zero reference line to the positive or the negative peak value of a voltage or a current. The unit of the amplitude is therefore either volt or ampere.

Instantaneous Power

The peak power is calculated by multiplying the instantaneous voltage u with the instantaneous current i.

FOR TRAINING PURPOSES ONLY!

© Lufthansa Technical Training

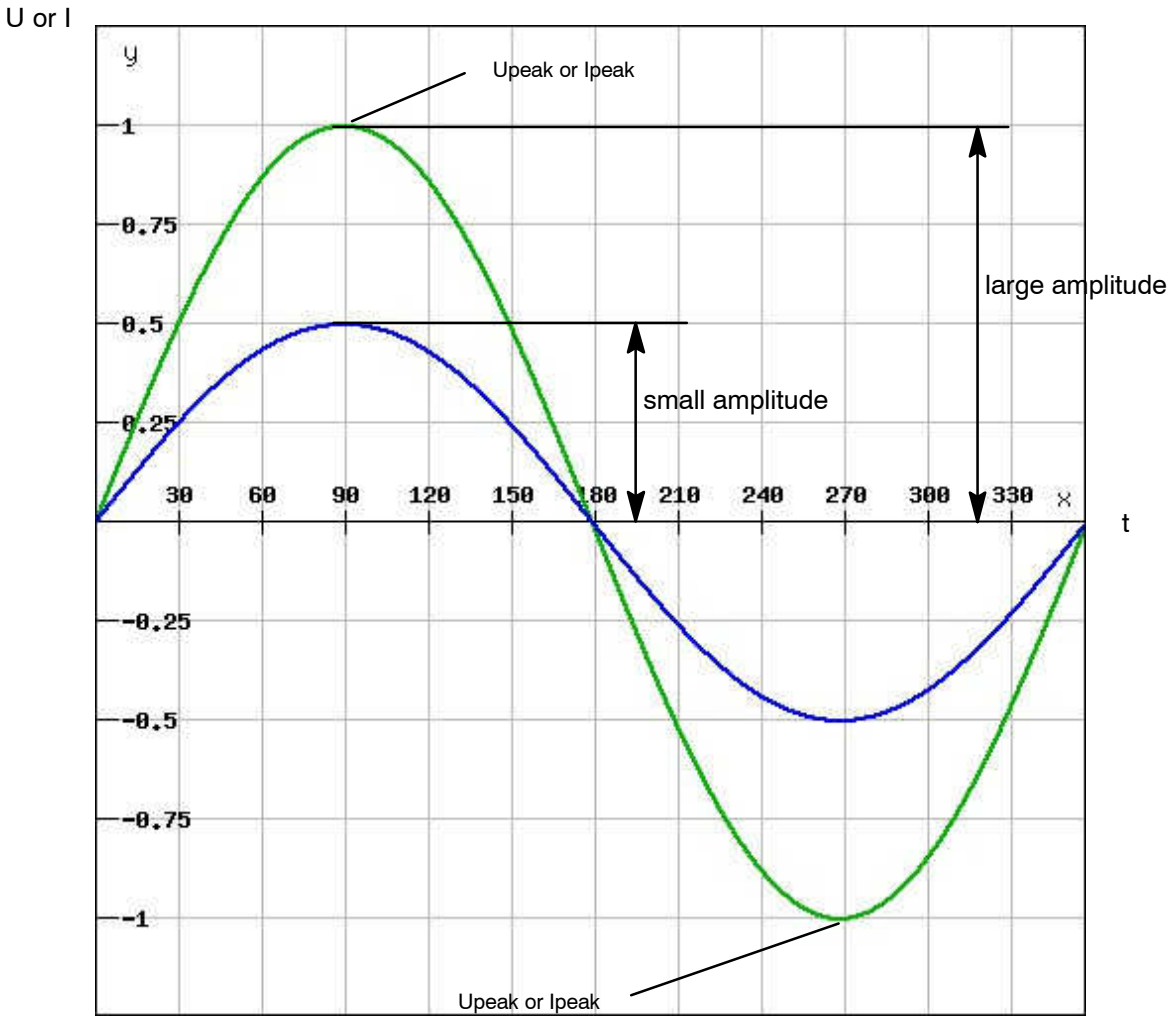

Figure 102 Amplitude and AC Voltage Curve

FOR TRAINING PURPOSES ONLY!

© Lufthansa Technical Training

PEAK–TO–PEAK VALUE

General

Peak–to–peak value means twice the peak value, in other words the value measured between positive maximum value and negative maximum value of a sine curve.

Calculation

$$U_{pp} = U_p \times 2$$

$$I_{pp} = I_p \times 2$$

If unknown AC and AC voltages are measured with a measuring oscilloscope, the following formula applies:

$$U_{peak} = \frac{U_{pp}}{2}$$

FOR TRAINING PURPOSES ONLY!

© Lufthansa Technical Training

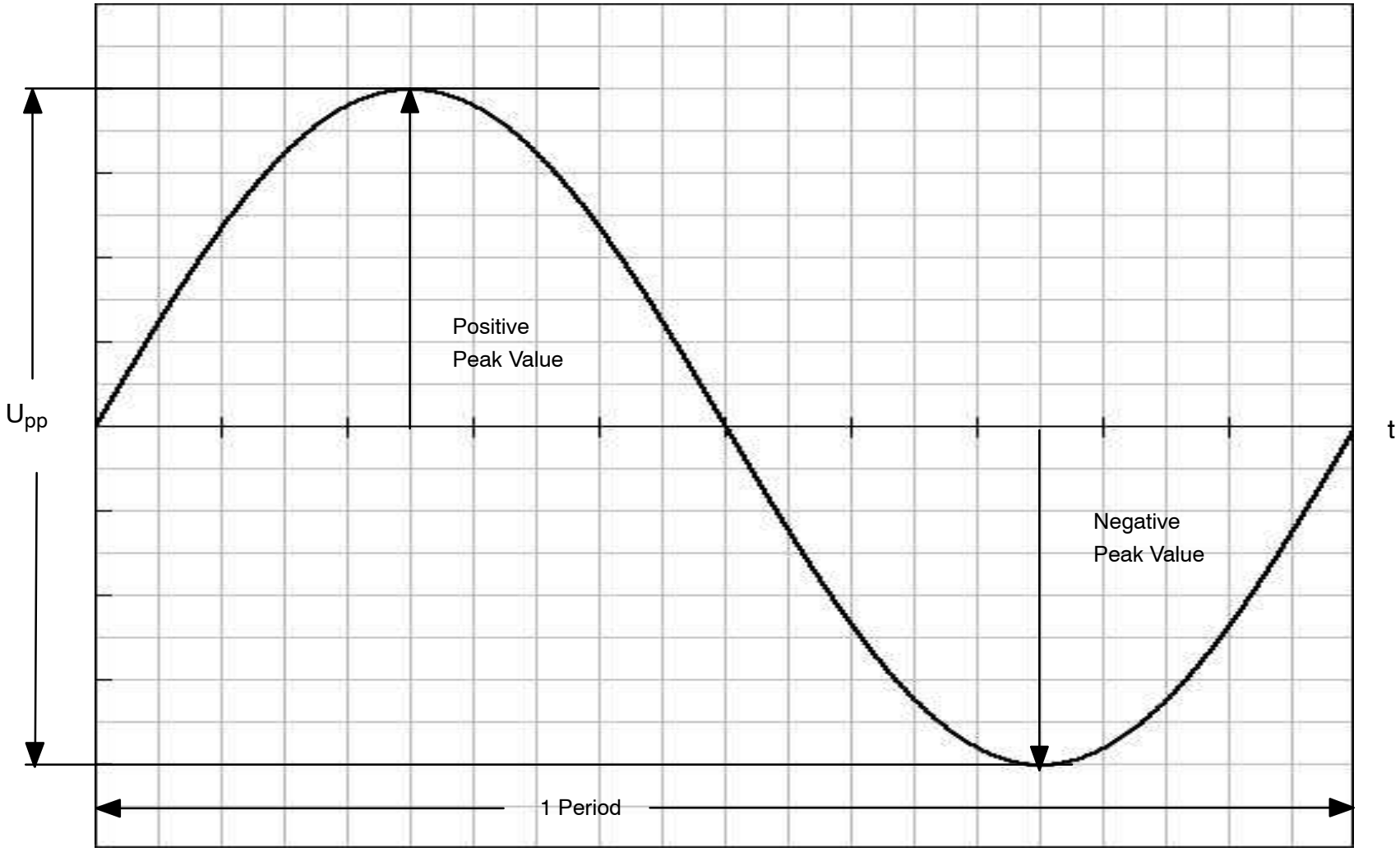

Figure 103 Line Diagram of AC Voltage

FOR TRAINING PURPOSES ONLY!

© Lufthansa Technical Training

ROOT MEAN SQUARE VALUE

General

The root mean square value, also called RMS value, of an AC is the value which, having the same resistance R, will produce the same power as an equivalent DC.

RMS

The short abbreviation for root mean square is RMS.

Calculation

The RMS value of a sinusodial AC is calculated by dividing the peak value I_{peak} or U_{peak} divided by $\sqrt{2}$ OR multiplying it by 0.707 .

$$\frac{U_{peak}}{\sqrt{2}} = U_{RMS} = U$$

Unless otherwise specified all AC voltage, current and power values are given as RMS values.

Effective Power

In general only the effective power, the RMS power, is calculated.

The RMS power is calculated by multiplying the RMS voltage V with the RMS current I.

FOR TRAINING PURPOSES ONLY!

© Lufthansa Technical Training

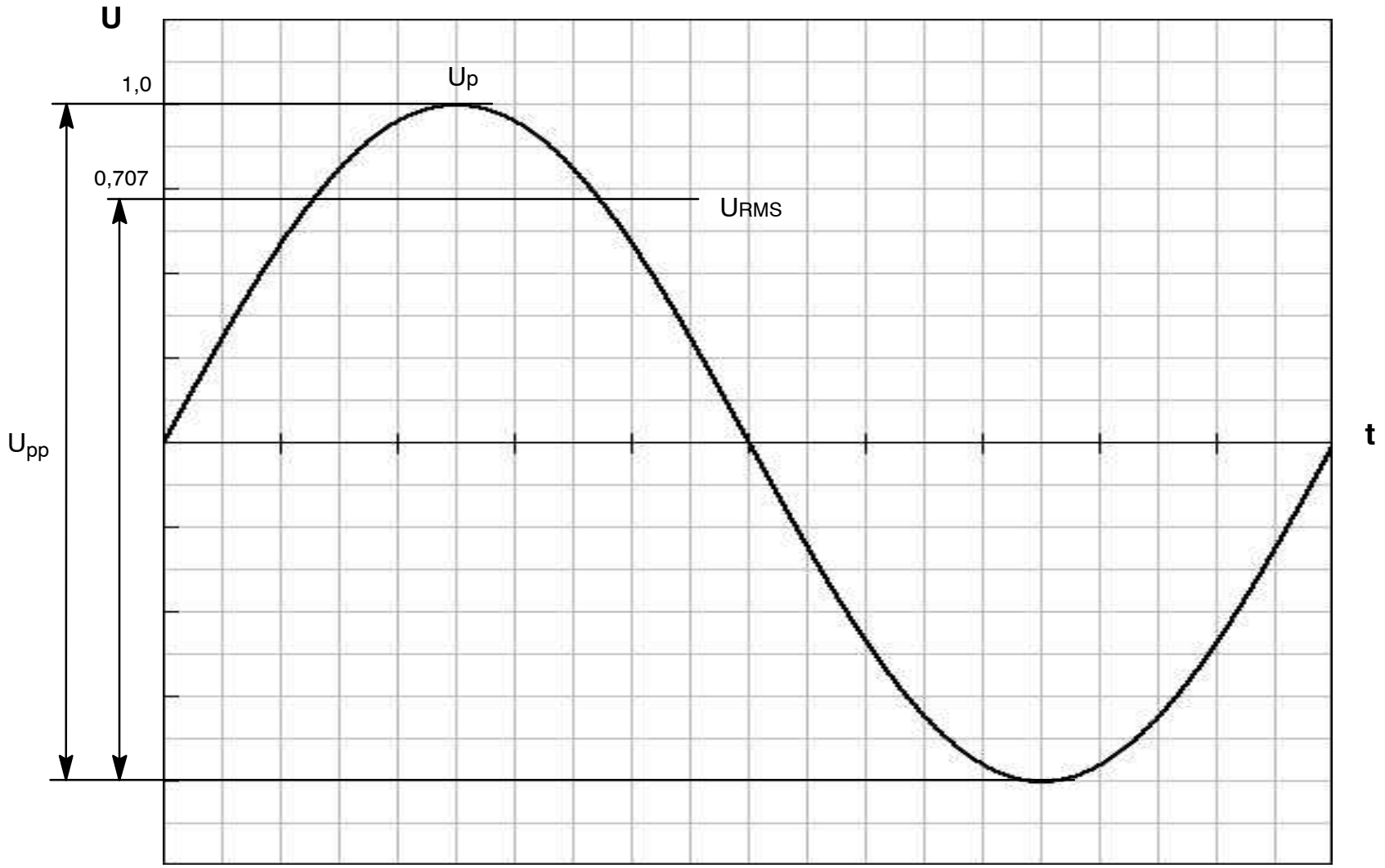

Figure 104 Root Mean Square Values

FOR TRAINING PURPOSES ONLY!

© Lufthansa Technical Training

NON SINUSODIAL AC VOLTAGES AND CURRENTS

General

Periodic voltages and currents, which do not show the sinusodial waveform in the voltage time or current time diagram, are referred to as non−sinusodial AC voltages or currents.

Definition for AC

If the area between the sine curve and the horizontal time axis is the same above and below this axis, the voltage is an AC voltage and the current is an AC.

Triangular Waves

Triangular Waves are given if the voltage increases linearly and, if a certain level is achieved, decreases linearly.

The same happens with the corresponding negative voltage.

Square Waves

Square Waves are given if the voltage periodically changes between two values.

The voltage change is abruptly.

FOR TRAINING PURPOSES ONLY!

© Lufthansa Technical Training

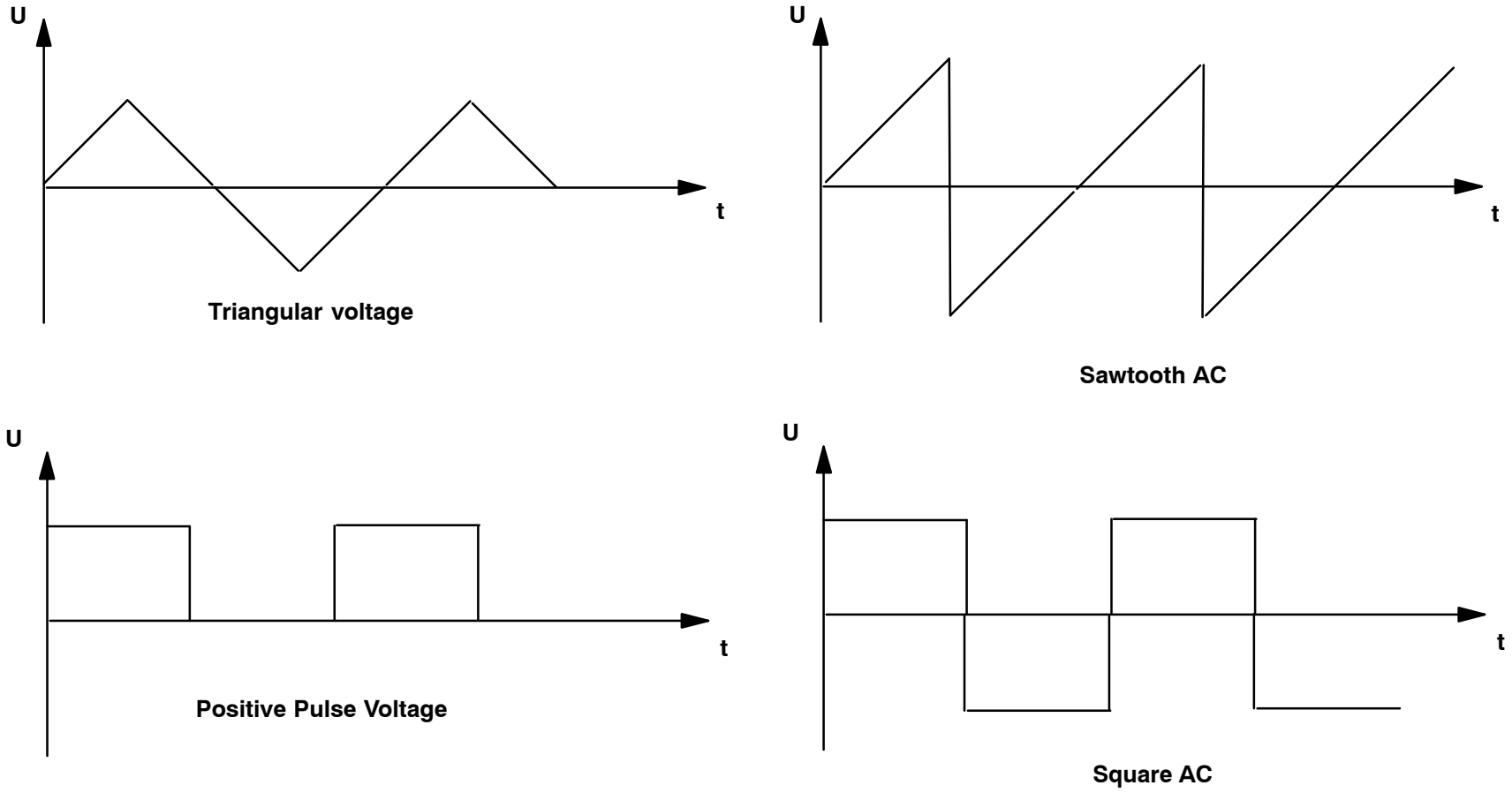

Figure 105 Non-Sinusodial Voltages

FOR TRAINING PURPOSES ONLY!

© Lufthansa Technical Training

Undulated Current

If the area between sine graph and horizontal time axis is not the same above and below this axis, DC and AC voltage overlay (superimposed voltage) or DC and AC current overlay (superimposed current).

[positive alternation = area above time axis]

[negative alternation = area below time axis]

Example 1

The DC voltage overlays the sinusodial AC voltage and so a superimposed voltage is created

Example 2

The DC voltage overlays the square AC voltage and so a superimposed voltage is created.

FOR TRAINING PURPOSES ONLY!

© Lufthansa Technical Training

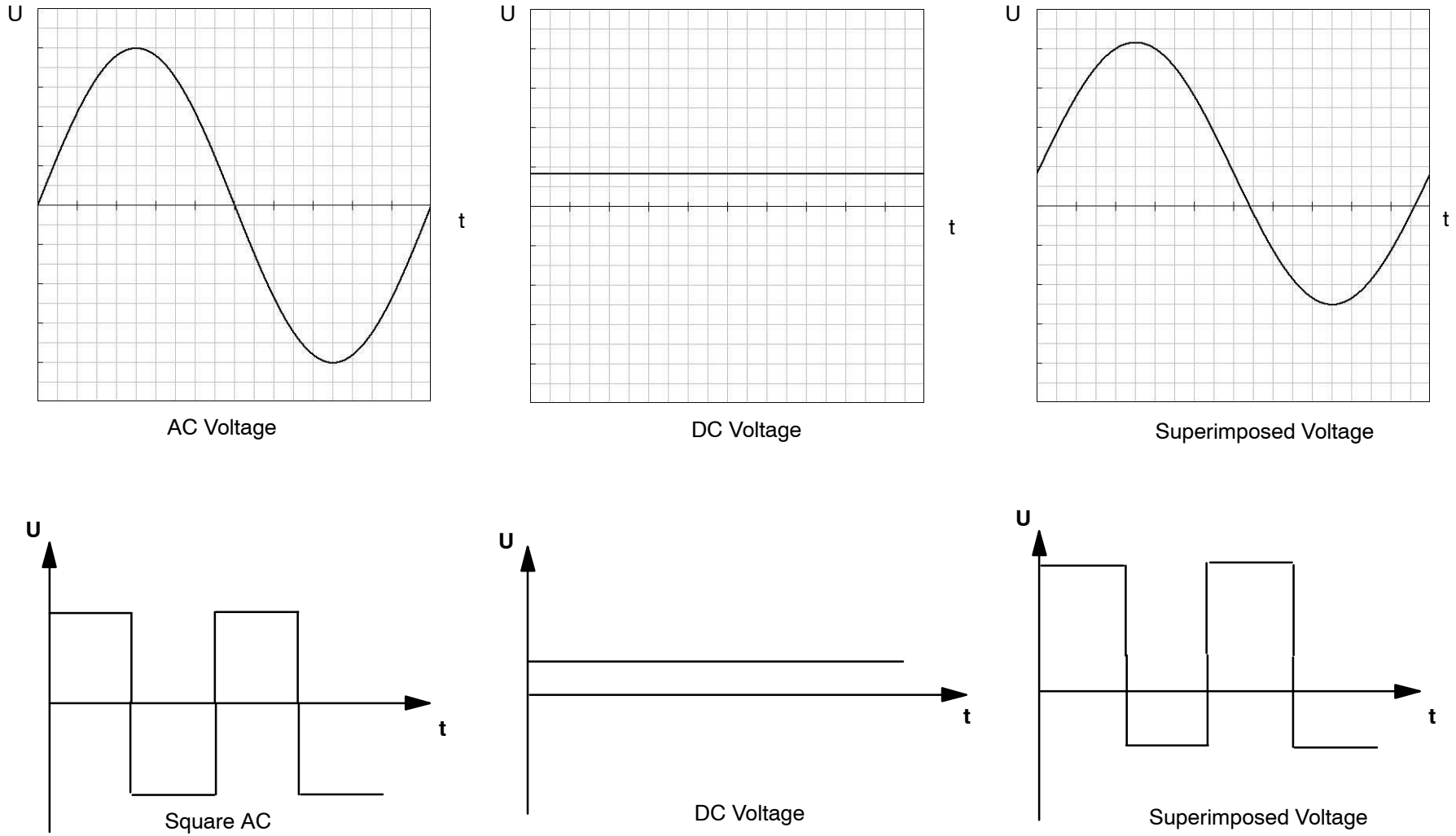

Figure 106 Undulated Current

FOR TRAINING PURPOSES ONLY!

© Lufthansa Technical Training

GENERATION OF A SINUSODIAL VOLTAGE

Simple Generator

If a wire loop spins in a magnetic field, a sinusodial AC voltage is induced in the wire loop. The size of the AC voltage depends on the angle of the wire loop towards the magnetic field. This voltage is tapped with slip rings.

In Generators usually a permanent magnet (or a current-carrying coil) rotates whilst the output windings are fixed.

Diagram

The generation of a sinusodial voltage can be shown easily in a vector diagram.

FOR TRAINING PURPOSES ONLY!

© Lufthansa Technical Training

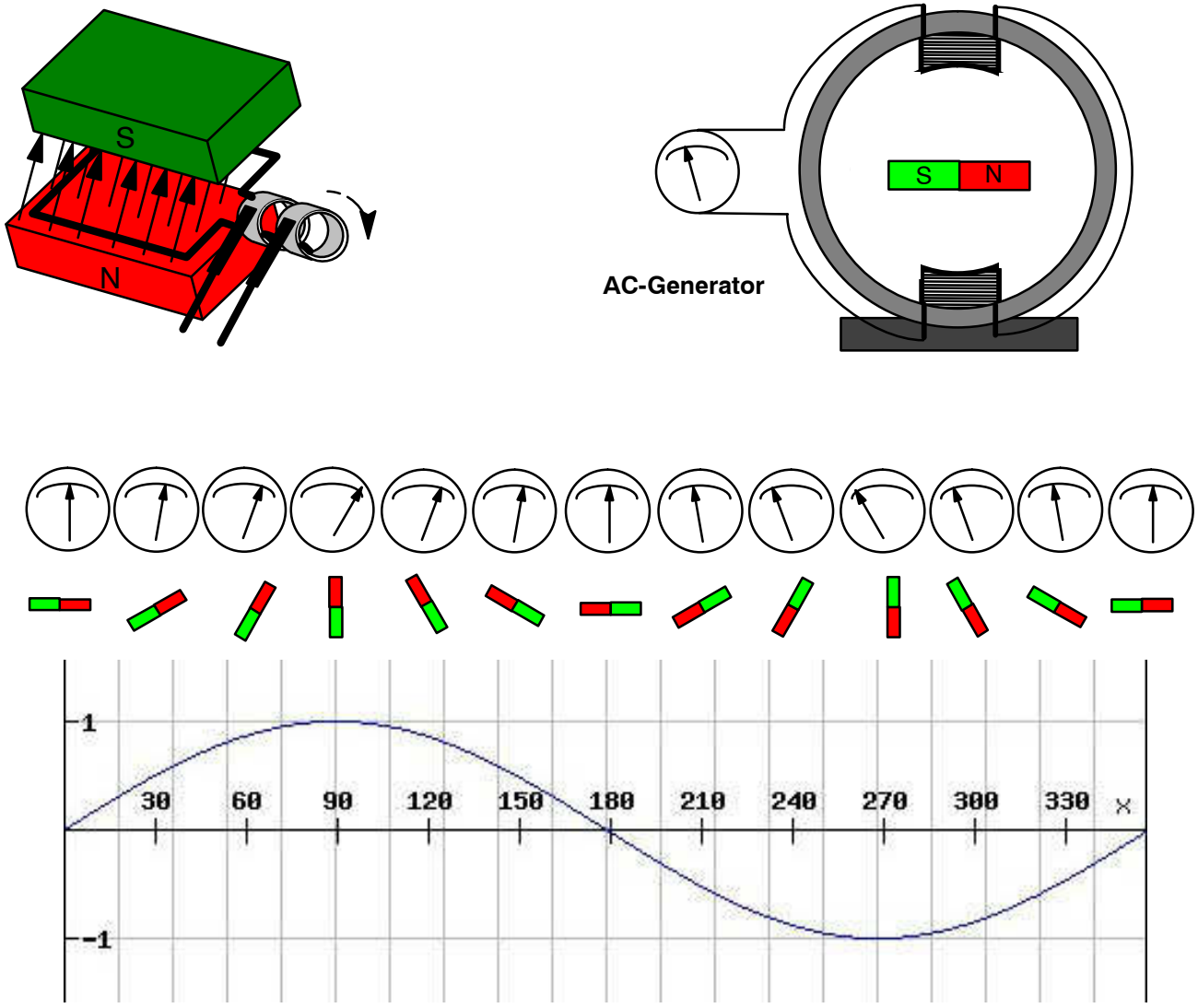

Figure 107 Generation of a Sinusodial Voltage

FOR TRAINING PURPOSES ONLY!

© Lufthansa Technical Training

Frequency and Rotational Speed

The frequency of a sinusoidal AC depends on the rotational speed of the generator. The frequency of the output voltage increases as the generator speed increases.

If the magnetic wheel of a bipolar device (one pole pair) rotates 50 times per second, an AC with a frequency of f = 50 Hz is generated.

Pole Pairs

If a quadripolar device with two pole pairs at the same rotational speed is used, the frequency will be twice as high.

The more pole pairs there are in a generator with the rotational speed remaining constant, the higher the frequency of the output voltage.

$$f = \frac{p \times n}{60}$$

f Frequency (1/s)

p Number of Pole pairs

n rotational speed (revolution frequency f_{rev} = rpm)

Angular Frequency, Angular Velocity ω

The circumference of a circle with the radius r is $2\pi \times r$.

If the cycle time T is needed for one full revolution of 360°, which is equivalent to $2\pi \times r$, the circumferential velocity is

$$v = \frac{2\pi \times r}{T}$$

Dividing both sides by the radius r, you obtain the equation

$$\frac{v}{r} = \frac{2\pi}{T}$$

Looking at the unit shows that $\frac{v}{r}$ has the same unit as the frequency f.

This quotient is designated as angular frequency also called angular velocity and has the symbol **ω.**

$$\omega = \frac{2\pi}{T}$$

Substituting f for $\frac{1}{T}$ gives:

$$\omega = 2\pi \times f$$

The angular frequency is very common in electronics. In formula's usually the angular frequency is used instead of the frequency as formula may become easier to read.

FOR TRAINING PURPOSES ONLY!

© Lufthansa Technical Training



Stator with 4 Pole Pairs

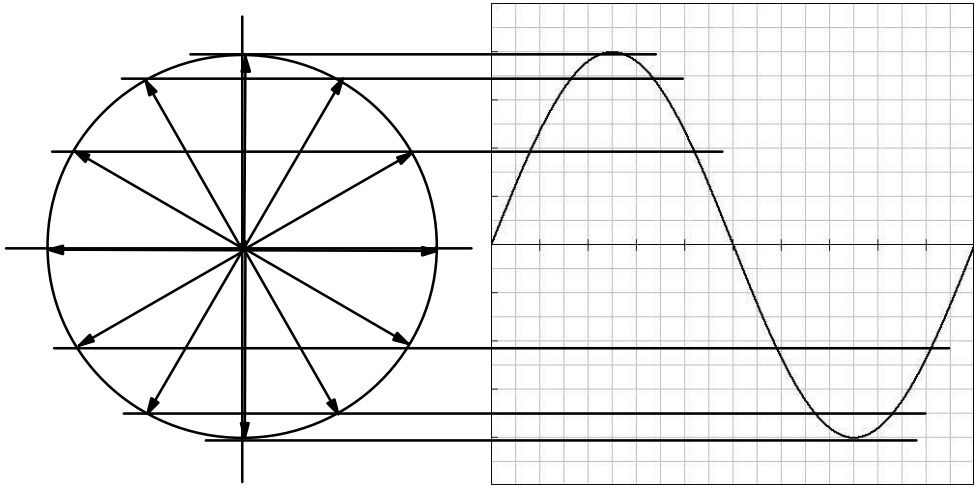

Line Chart

Figure 108 Frequency and Rotational Speed

FOR TRAINING PURPOSES ONLY!

© Lufthansa Technical Training

Derivation of an AC Phasor

The illustration of the AC phasor is based on the principle of drawing a sine curve.

When drawing, the length of such a phasor is the peak value, according to the chosen scale (phasors representing alternating quantities must be marked by underlining; e.g. $\underline{u_p}$).

Imagine the phasor u_p rotating counterclockwise around its origin with an angular frequency.

The projection of u_p on the y-axis then is the instantaneous value.

$$u = u_p \times \sin \omega t$$

These instantaneous values, which are drawn over the ωt–axis, show the line graph.

Hence the phasor u_p is the simplified representation of the sinusoidal AC voltage.

To make it even more simple, the voltage phasor can be drawn as an RMS value ($U = 0.707\ u_p$) in the chosen scale.

Addition of Alternating Quantities

The AC's in the schematic below pass zero at the same time and pass the peak value Up at the same time. Such AC's are called in phase.

In a line chart the addition of two AC's is done by adding the two instantaneous values $u = u_1 + u_2$.

In the phasor diagram the sum of two phasors is achieved by adding both phasors regarding size and direction:

$\hat{u} = \hat{u}_1 + \hat{u}_2$

In an AC circuit two sinusoidal quantities – e.g. voltage and current as shown in the diagram – are in phase if they both reach their peak values and zero at the same time.

FOR TRAINING PURPOSES ONLY!

© Lufthansa Technical Training

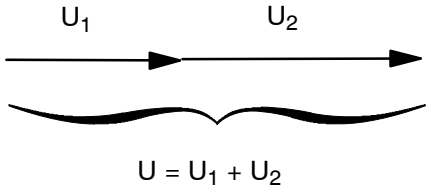

addition of two phasors

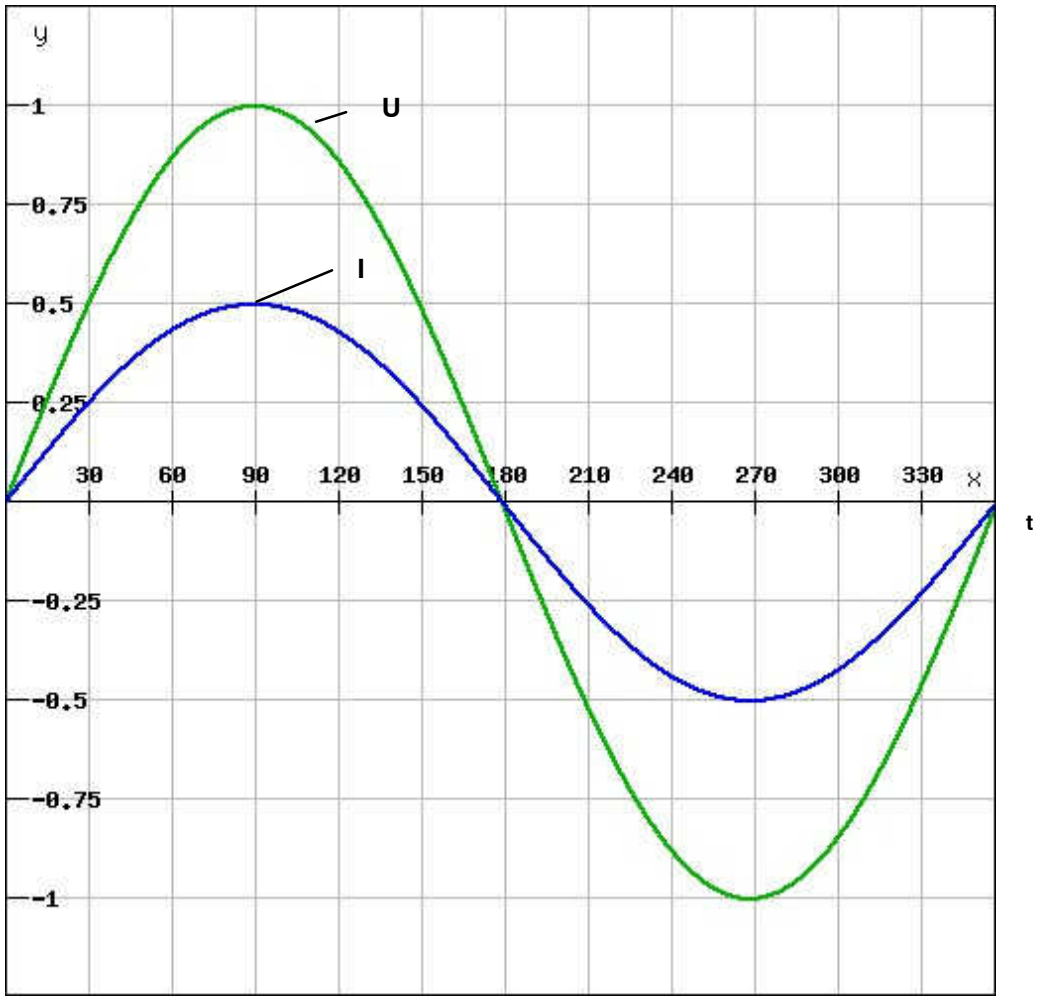

Figure 109 Phasors

FOR TRAINING PURPOSES ONLY!

© Lufthansa Technical Training

3–PHASE SYSTEMS

General

So far we have only mentioned single–phase systems. This was necessary to explain the electrical fundamentals of AC technology in a simple way.

In practice, however, single–phase is not the only system used. It was found that multi–phase systems produced greater quantities of power than the single–phase transmission systems.

Machines with Three Coils

How can a multi–phase system be created?

Three identical coils are attached to the stator of an experimental generator. Each of these three coils, in which a voltage is to be generated, will be positioned differently. The three coils are displaced by an angle of 120°. To each coil a moving coil voltmeter is then attached, the zero point of which is in the middle of the scale.

The pointers of the three voltmeters will point once to the right and once to the left during one revolution of the magnetic wheel.

If the magnetic wheel is rotating, an AC voltage is induced in each of the three coils. Though they have the same quantity, each of the voltages is temporally out of phase by 120°.

Rotor

The rotor acts as a permanent magnet and therefore must be supplied with DC via sliprings.

Line to Neutral Voltage

The three coils form the so called phase windings of the generator. In each of these phase windings a voltage is generated, the Line to Neutral Voltage.

The coils supply three separate single–phase AC circuits.

Line to Line Voltage

When connecting a load to two of the phases e.g. A and B, the Line to Line Voltage is available. It is $\sqrt{3}$ times the voltage of a single Line.

Denotation of Wires

Outgoing leads are denoted with the letters L1, L2, L3.

In aeroplanes the phases are denoted with A, B, C.

On aircraft the voltages found are 115 V and 200 V.

FOR TRAINING PURPOSES ONLY!

© Lufthansa Technical Training

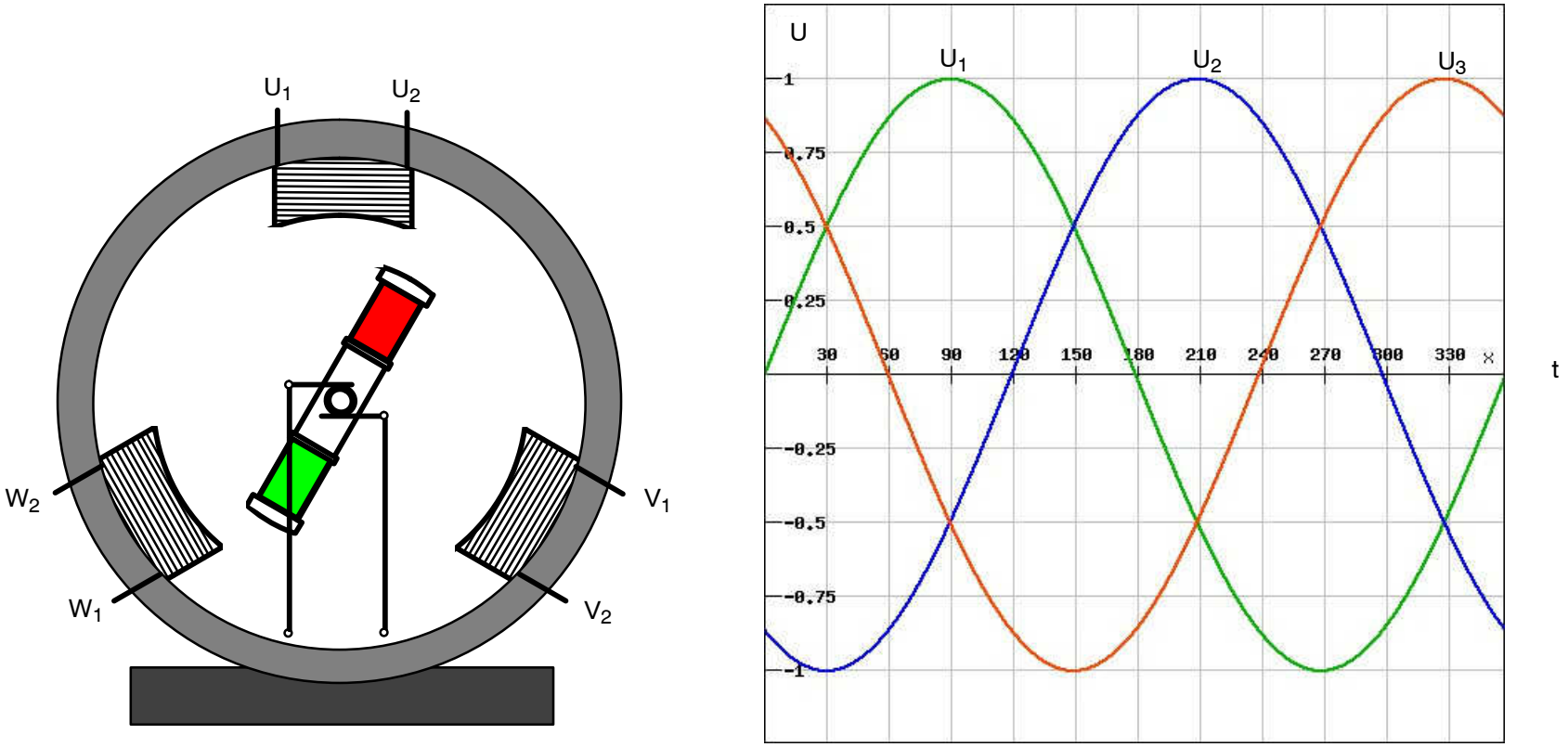

Figure 110 Three-Phase Generator

FOR TRAINING PURPOSES ONLY!

© Lufthansa Technical Training

PROPERTIES OF THREE-PHASE SYSTEMS

General

Three−phase−systems consist of three generators in a common housing. The three stator windings have a displacement of 120°.

The three currents in the three independent circuits have a phase shift of 120° as well as the voltages.

If neutral conductors from the three systems are interconnected, a standard three−phase system is obtained with a so called **star or Y connection**.

Star Connection

The schematic diagram below shows a so called three phase circuit, where, in the example, all phases are equally (symmetrically) loaded with a bulb.

This symmetric load ensures that the same current flows in all leads, but out of phase by 120°.

Under symmetric load, the currents in the neutral conductor cancel each other. Therefore no current flows in the neutral line.

Two Different Voltages

In three−phase systems two different voltages can be measured.

In aircraft the voltages are:

- 115 V on a single phase (balanced to ground), the Line to Neutral Voltage
- 200 V between two phases, the Line to Line Voltage.

Calculation

A geometric addition of the voltages of two phases in series will prove that the voltage between two phases is $\sqrt{3}$ times the voltage of an individual phase.

Delta Connection

In a delta arrangement, when the workload is connected between two of the phases, the power output will be three times as high as if connected to a single phase only.

Not all power consumers are designed for that higher voltage. If the device is not designed for the higher voltage, it can be damaged.

FOR TRAINING PURPOSES ONLY!

© Lufthansa Technical Training

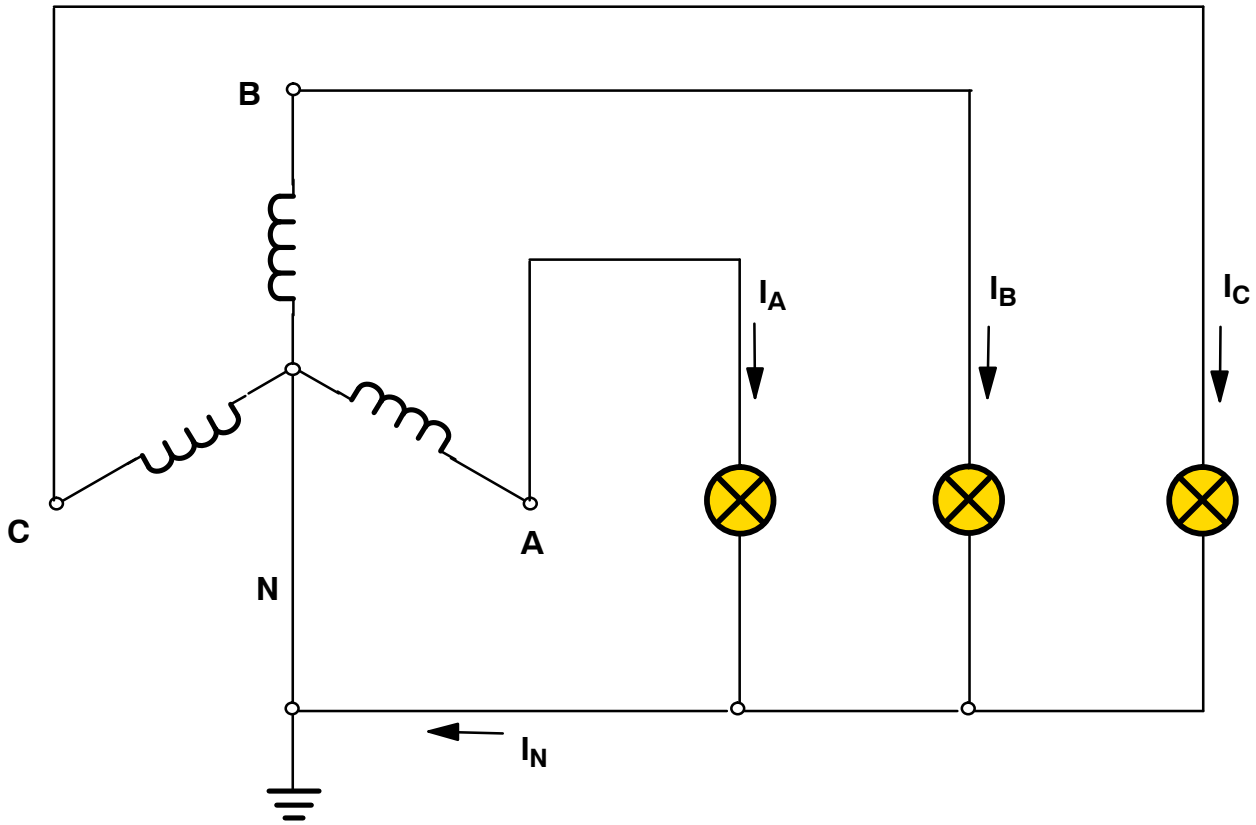

Figure 111 Three-Phase System

FOR TRAINING PURPOSES ONLY!

© Lufthansa Technical Training

M3.14 RESISTIVE (R), CAPACITIVE (C) AND INDUCTIVE (L) CIRCUITS

PHASE SHIFT

General

In an AC circuit two sinusoidal quantities – e.g. voltage and current as shown in the diagram – are out of phase (time–shifted) if each of them reaches its peak values and zero at a different time.

Phase shifting happens if capacitors or coils are used in an electric circuit.

The value of the phase shift is expressed as the phase angle φ in degrees.

Lagging Phases and Leading Phases

A phase shift can be lagging ($-\varphi$) or leading ($+\varphi$). There always has to be a reference phase. In the diagram on the right U is the reference phase.

I_1 leads the reference phase U by $+\varphi$.

I_2 lags the reference phase U by $-\varphi$.

If AC's with the same frequency f or the same angular frequency ω do not pass the zero passages or the peak values at the same time, they are out of phase (to each other).

In our example the voltages u_1 and u_2 are out of phase by $\varphi = 60°$.

Hence U_2 leads U_1 by $\varphi = 60°$ or, in other words, U_1 lags U_2 by $f = 60°$.

φ is called phase angle.

In the phasor diagram it can be seen which one of the two voltages in spin direction ω leads or lags. Sine waves do not always start at the zero degree point on the time axis. If a sine wave starts before the zero degree point then it is said to lead the sine wave that starts at zero degrees.

In order to add the AC's in the line chart, the associated instantaneous values are added, as described before: $u_{tot} = u_1 + u_2$

In the phasor diagram the phasors u_{p1} and u_{p2} are added according to size and direction. When doing so, it is not important whether the sum $u_{tot} = u_1 + u_2$ or the sum $u_{tot} = u_2 + u_1$ is used.

FOR TRAINING PURPOSES ONLY!

© Lufthansa Technical Training

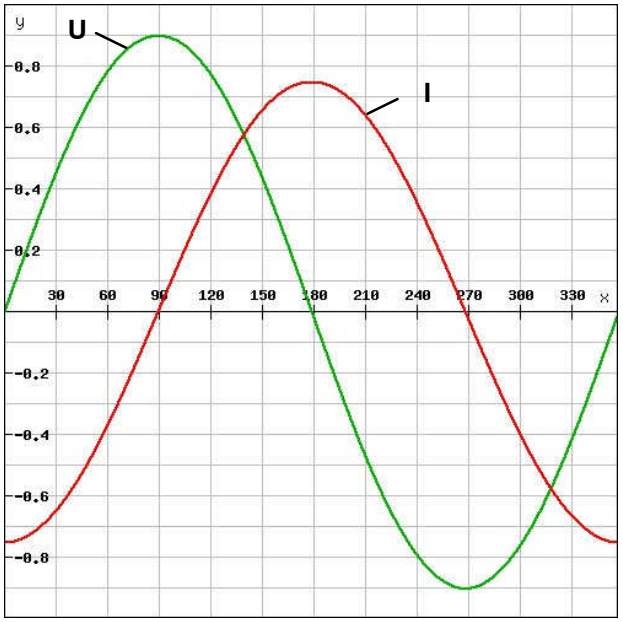

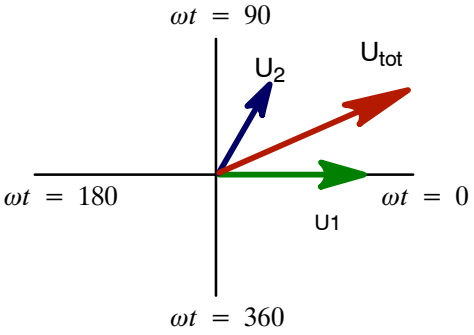

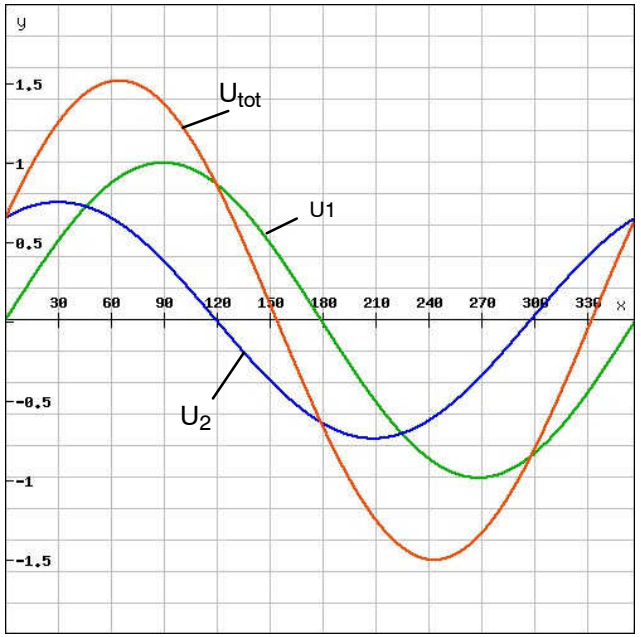

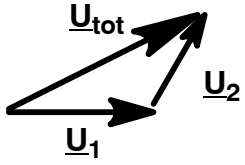

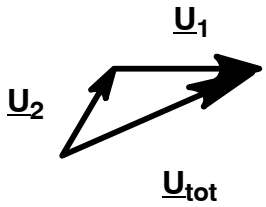

Figure 112 Phase Shift

FOR TRAINING PURPOSES ONLY!

© Lufthansa Technical Training

Different Alternating Quantities in one Diagram

Different alternating quantities with the same frequency f can be illustrated in a common phasor diagram and in a common line chart.

In the following diagram an AC voltage and the associated AC current are illustrated.

FOR TRAINING PURPOSES ONLY!

© Lufthansa Technical Training

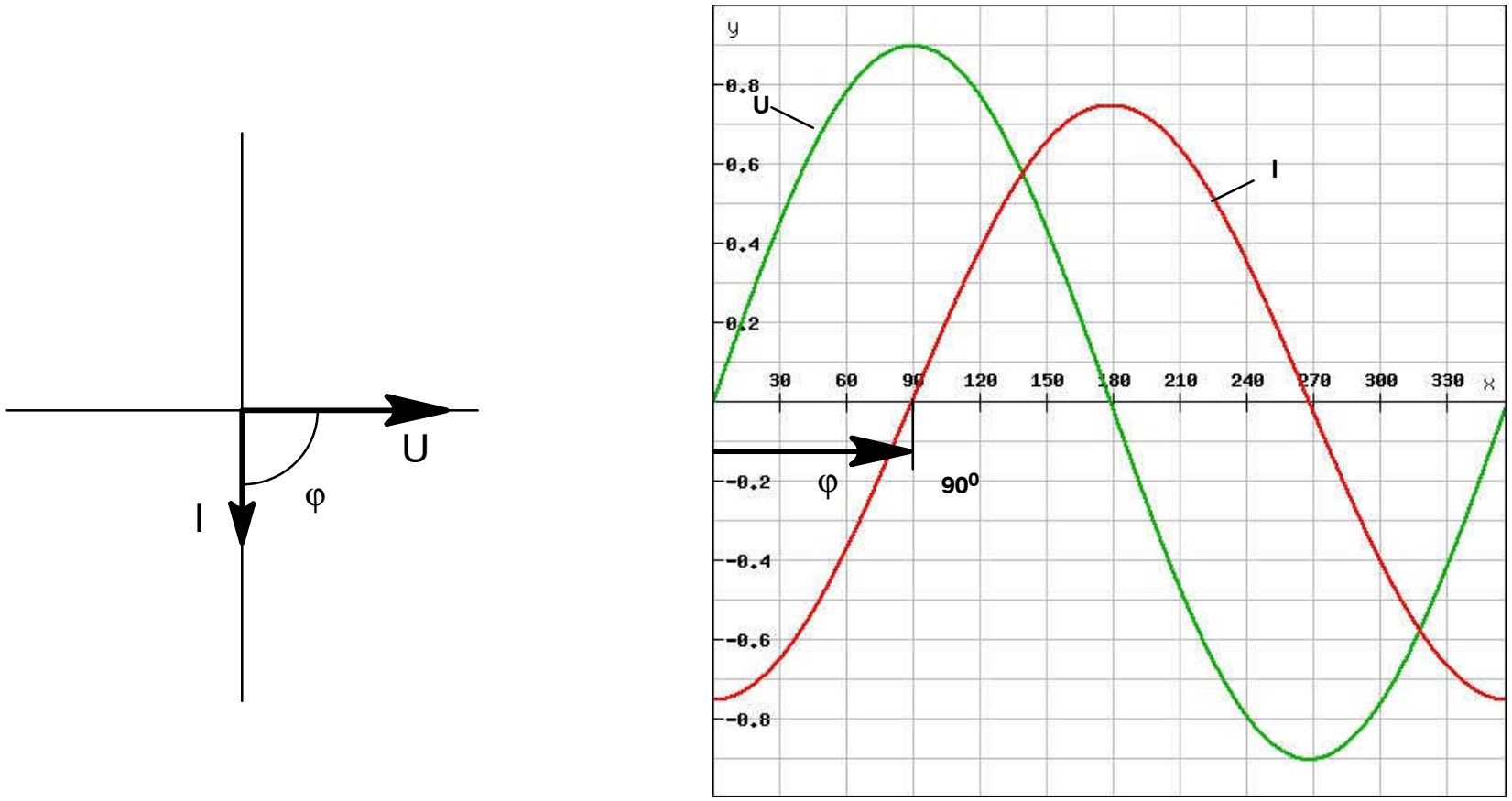

Figure 113 Different AC Quantities in one Diagram

FOR TRAINING PURPOSES ONLY!

© Lufthansa Technical Training

OHMIC RESISTANCE

Current Draw at AC and DC

An ohmic resistance (bulb 230 V / 60 W) is connected in series with an ammeter to a DC voltage source with U⎓ = 230 V. At the same time, a similar bulb with an equal resistance is connected in series with an ammeter to an AC voltage source with U~= 230 V, f = 50 Hz.

The result is:

Both light bulbs glow with the same brightness consuming the same quantity of electricity. Thus, at both, DC voltage and AC voltage, the bulbs have the same resistance and the same effect.

Effective Resistance

A resistor which has the same effect in both, AC circuit and DC circuit, is referred to as effective resistance R or ohmic resistance R.

It shows an effect, i.e. it converts electrical energy into another form of energy (heat, light, mechanical energy).

Calculation

From the RMS values of voltage and current the effective resistance can be determined according to Ohm's law.

In an AC circuit with effective resistance Ohm's law is valid:

effective resistance: $R = \frac{U_R}{I_R}$

Phase Angle

If the graphs of both current and voltage in an AC circuit with effective resistance are made visible by an oscilloscope, the following is observed: The sinusoidal voltage causes a sinusoidal current. The zero passages and the peak values of voltage and current coincide, i.e. the course of both graphs is exactly the same.

In an effective resistance, current and voltage are in phase.

Example

A heating device applied to 230 V consumes 2 A.

What is the resistance?

U = 230 V

I = 2 A

$$R = \frac{U}{I} = \frac{230\ V}{2\ A} = 115\Omega$$

FOR TRAINING PURPOSES ONLY!

© Lufthansa Technical Training

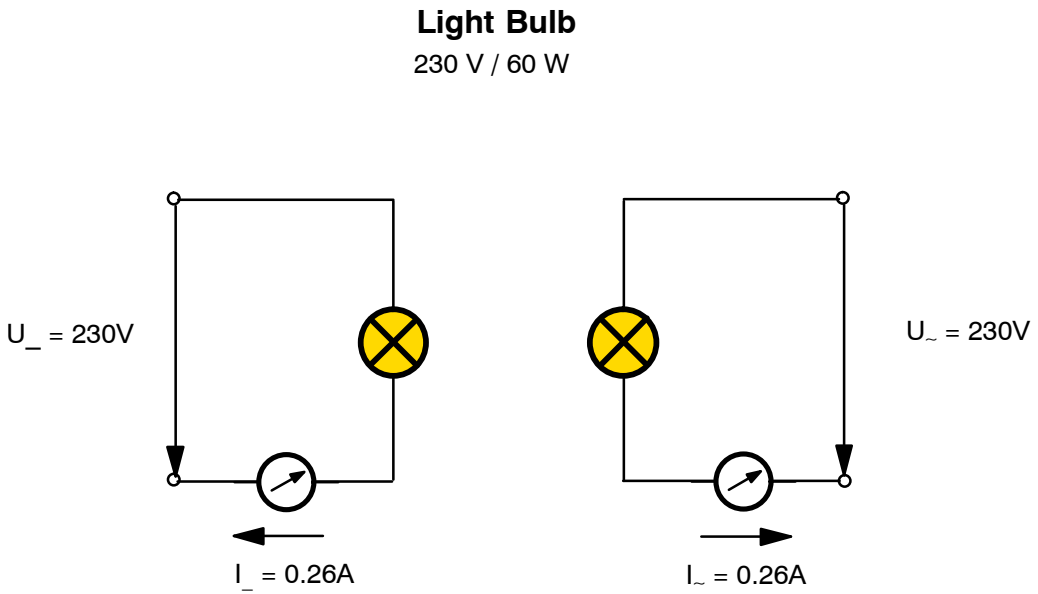

Figure 114 Ohmic Workload on DC and AC

FOR TRAINING PURPOSES ONLY!

© Lufthansa Technical Training

INDUCTIVE REACTANCE

Current Draw at AC and DC

A coil with a winding resistance of R_W = 50 Ohm is connected in series with an ammeter to a DC voltage source with U = 230 V. An equivalent coil is connected in series with an ammeter to an AC voltage with 50 Hz.

The coil resists the AC to a higher extent than the DC. The current in the AC circuit is smaller than the current in the DC circuit.

Reactance

Besides the ohmic resistance (winding resistance) R a coil in an AC circuit has another resistance called inductive reactance X_L.

The inductive reactance is the result of an AC in a coil causing a self–induced voltage. This self–induced voltage opposes the applied voltage and therefore reduces the effective voltage causing the current to decrease, too.

That means that an additional resistance is created.

The inductive reactance is the result of self–induction.

Following the rhythm of frequency, the AC continuously builds up a magnetic field and then breaks it down again. In doing so, the coil draws energy, stores it in the magnetic field for a short time and then conducts it back to the mains. The energy is pushed back and forth, without visible effect. Therefore the energy is called reactive energy and the resistances causing the reactive energy are called reactance, here inductive reactance.

Phase Angle

The course of current and voltage in an AC circuit with a pure inductive reactance (ideal coil) is made visible with an oscilloscope.

A coil is wound with such a thick wire that its winding resistance can be neglected with respect to the inductive reactance.

Sinusoidal AC voltage causes sinusoidal AC current.

It can be seen that, regarding their zero passages, current and voltage are out of phase.

In a circuit with inductive reactance (ideal coil) the current lags the applied voltage by 90° (i.e. $^1/_4$ cycle).

phase shift $\varphi = 90°$

The reason for the phase shift is the influence of the self–induction of the coil.

As the self–induced voltage opposes the applied voltage, the initial buildup of current is delayed.

FOR TRAINING PURPOSES ONLY!

© Lufthansa Technical Training

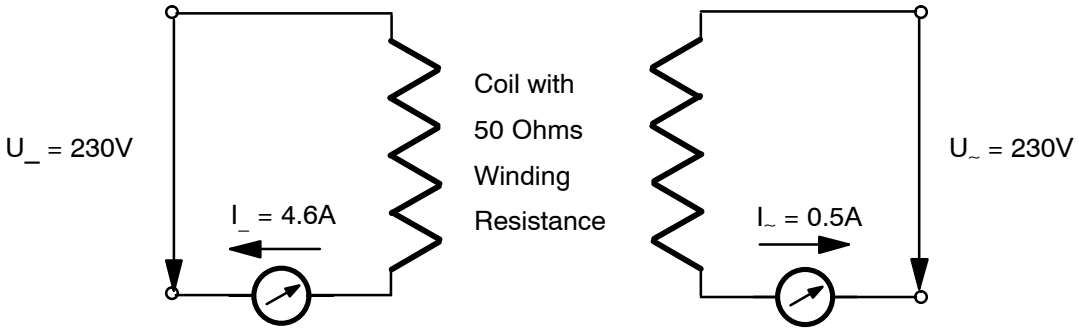

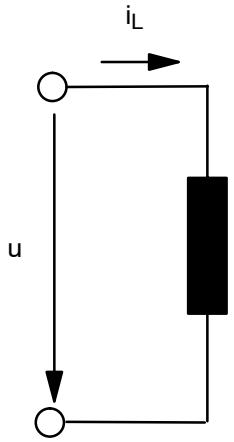

Connection

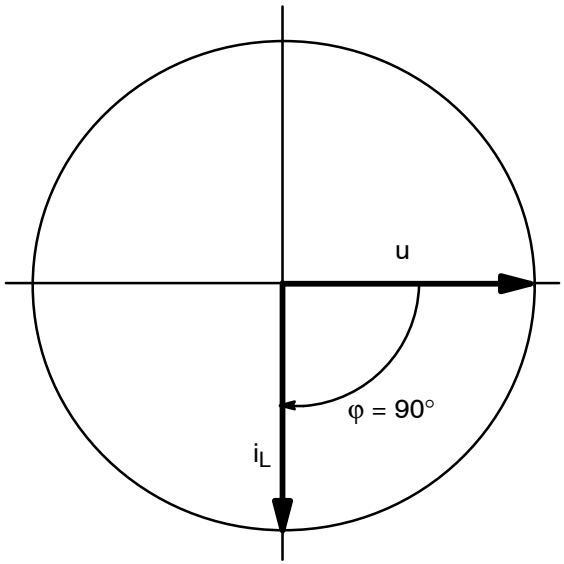

Phasor Diagram

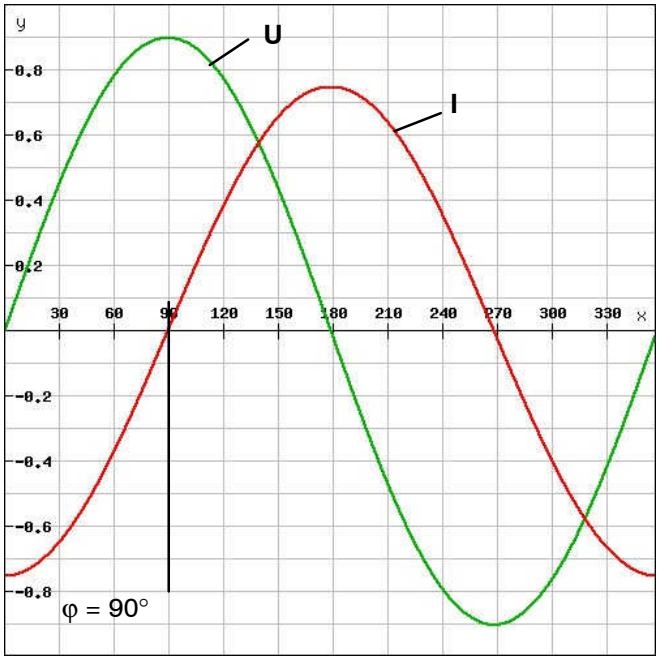

Waveform Diagram

Figure 115 Înductor on AC and DC

FOR TRAINING PURPOSES ONLY!

© Lufthansa Technical Training

Calculation

In a pure inductive circuit the inductive reactance can be determined from the RMS values of voltage and current by applying Ohm's Law.

inductive reactance $X_L = \frac{U_L}{I_L}$

The higher the inductance of the coil, the higher the inductive reactance of a coil.

The higher the frequency, the higher the inductive reactance of a coil.

The reactance increases with increasing inductivity and increasing frequency.

Symbol for Quantity and Unit

The symbol for reactance is X .

The symbol for inductive reactance is X_L .

The reactance is measured in ohms (Ω).

Formula 1

The inductive reactance can be calculated if inductance and frequency are known.

Inductive reactance $X_L = 2 \pi \times f \times L$

X_L inductive reactance in Ω

f Frequency in Hz

L inductance in H

As the angular frequency is $\omega = 2 \pi f$, you can write $X_L = \omega L$

ω: angular frequency in $\frac{1}{s}$

Formula 2

The inductive reactance can also be calculated as shown above. For this voltage and current must be known.

$$X_L = \frac{U_L}{I_L}$$

Inductance

The inductive reactance increases as the magnetic resistance is increased by using iron, i.e. as the inductance and also the frequency increases.

With the higher inductance the coil becomes more effective, i.e. in the coil a higher self–induced voltage is induced opposing the applied voltage.

This causes the current to decrease and therefore the resistance to increase.

The higher the frequency of the AC also means that the current changes more quickly and again, a higher self–induced voltage occurs.

Example 1

In a coil with an inductive reactance of X_L = 25 Ohm a current of I = 1.5 A flows.

What voltage occurs on the inductive reactance?

$U_L = X_L \times I_L = 25\,Ohm \times 1,5A = 37,5V$

Example 2

An ideal coil with an inductance of L = 100 mH is applied to an AC voltage of U = 230, f = 50 Hz

1. What is the inductive reactance?
2. What current builds up?

1. $X_L = 314 \frac{1}{s} \times 0,1 \frac{Vs}{A} = 31,4\ \Omega$

2. $I_L = \frac{230\ V}{31,4\ \Omega} = 7,32\ A$

FOR TRAINING PURPOSES ONLY!

© Lufthansa Technical Training

THIS PAGE INTENTIONALLY LEFT BLANK

FOR TRAINING PURPOSES ONLY!

© Lufthansa Technical Training

CAPACITIVE REACTANCE

Current Draw at AC and DC

A capacitor has a capacitance (C) of 10 µF. The capacitor is connected in series with an ammeter to a DC voltage source with U = 230 V. An equivalent capacitor is connected to an AC voltage source with U = 230 V.

As already mentioned, the capacitor blocks DC (exception: the short initial current impulse). In a DC circuit the capacitor has an infinite resistance.

In an AC circuit the capacitor does not block the current flow but lets it pass, i.e. the capacitor operates in a similar manner to a resistor.

Reactance

In an AC circuit a capacitor behaves like a resistance. This resistance is referred to as capacitive reactance Xc.

Every time the polarity in an AC circuit changes, the capacitor is charged and discharged. Therefore the initial current permanently rises and falls. The capacitor in an AC circuit behaves like a resistor, because a constant current flows.

The capacitive resistance is also referred to as capacitive reactance, because the capacitor draws energy (reactive energy) during the charging process and stores it for a short time in the electric field. During the discharging process the stored energy is conducted back to the mains. The energy is pushed back and forth, without visible effect.

Phase Angle

If the graphs of current and voltage of an AC circuit with capacitive reactance are made visible with an oscilloscope, the following becomes obvious:

The sinusoidal AC voltage causes a sinusoidal current. However, the zero passages of current and voltage are out of phase.

In a circuit with capacitive reactance (ideal capacitor) the current leads the applied voltage by 90° (i.e. ¼ Cycle).

Phase shift $\varphi = 90°$

In an AC circuit a capacitor generates a phase shift opposite to that of a coil.

The phase shift between current and voltage can be proved as follows:

If a DC voltage is applied to a capacitor, an initial current (charging current) flows for a short time. Changing the voltage, e.g. increasing it, again causes a charging current to occur for a short time. A decrease in voltage also causes a current, but in the opposite direction (discharging current).

FOR TRAINING PURPOSES ONLY!

© Lufthansa Technical Training

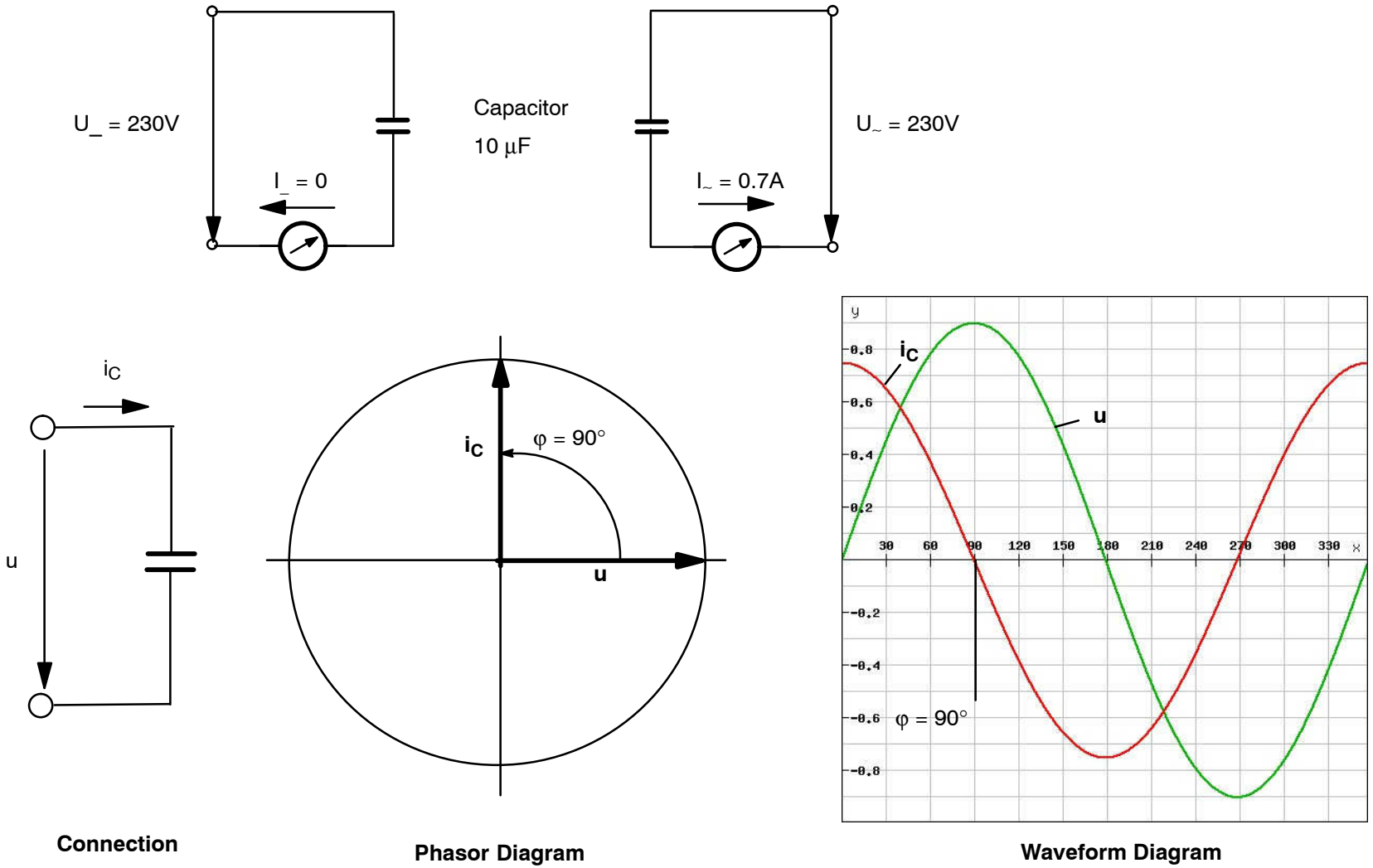

Connection

Phasor Diagram

Waveform Diagram

Figure 116 Capacitor connected to AC and DC

FOR TRAINING PURPOSES ONLY!

© Lufthansa Technical Training

Calculation

Basically, a current only flows, if the applied voltage changes.

Looking at an AC voltage it can be seen that it changes continually. As long as the voltage rises, a charging current flows. As soon as the voltage falls a discharging current flows in the opposite direction with respect to the charging current.

The current has reached its peak value, when the highest change in voltage occurs, i.e. at the zero passage of the voltage. The current is zero, if the supplied voltage does not change. This happens at the peak values of the voltage. Thus, the following occurs at the same time: u = 0 and i = i_p, u = u_p and i = 0.

The capacitive reactance can be determined from the RMS values of the supplied voltage and the current, if Ohm's Law is applied:

Capacitive reactance $X_C = \frac{U_C}{I_C}$

Symbol for Quantity and Unit

The symbol for reactance is X .

The symbol for capacitive reactance is X_C .

The reactance is measured in ohms (Ω).

Formula 1

The higher the capacitance (the capacity of the capacitor) the easier the capacitor can be charged with a certain voltage, i.e. the higher the current and thus the lower the resistance.

A higher frequency means that the voltage changes occur more quickly and that a higher charging and discharging current flows. A higher current means that the resistance is lower.

The capacitive reactance of a capacitor decreases as the capacitance of the capacitor increases and as the frequency increases.

$$X_C = \frac{1}{2\pi \times f \times C}$$

Formula 2

The capacitive reactance can also be calculated if voltage and current are known.

$$X_C = \frac{U_C}{I_C}$$

Example 1

A capacitor with a capacitive reactance of X_C = 500 Ohms is applied to an AC voltage source with U = 400 V.

What is the current?

$$I_C = \frac{400\,V}{500\,\Omega} = 0,8\,A$$

Example 2

A capacitor with a capacitance with C = 5 µF is connected to an AC voltage source with U = 110 V, f = 50 Hz.

What value is the:

1. capacitive reactance
2. current input

of the capacitor?

1. $X_C = \frac{1}{2 \times 3,14 \times 50\frac{1}{s} \times 5\mu F \times 10^{-6}As} = 636\Omega$

2. $I_C = \frac{U_C}{X_C} = \frac{110V}{636\Omega} = 0,173A$

FOR TRAINING PURPOSES ONLY!

© Lufthansa Technical Training

THIS PAGE INTENTIONALLY LEFT BLANK

FOR TRAINING PURPOSES ONLY!

© Lufthansa Technical Training

INFLUENCE OF THE FREQUENCY ON THE REACTANCE

Ohmic Resistance

In theory, the frequency has no influence on the resistance value of an ohmic resistance. Nevertheless, slight differences can be found in practice:

Effective resistances have constant values in the range of 0 Hz to approximately 1000 Hz.

If the frequency is higher than 1000 Hz, the resistance rises.

The reason for the increased resistance is the so–called skin effect. This effect is the result of eddy currents inside the conductor causing a change in AC towards the conductor's edge. Thus the cross sectional area of the conductor decreases and the resistance increases.

However, the effective resistance is NOT frequency dependent.

Inductive Reactance

The inductive reactance increases proportional to the frequency of the applied AC.

$$X_L = 2\pi \times f \times L$$

Capacitive Reactance

The capacitive reactance increases inversely proportional to the frequency.

$$X_C = \frac{1}{2\pi \times f \times C}$$

FOR TRAINING PURPOSES ONLY!

© Lufthansa Technical Training

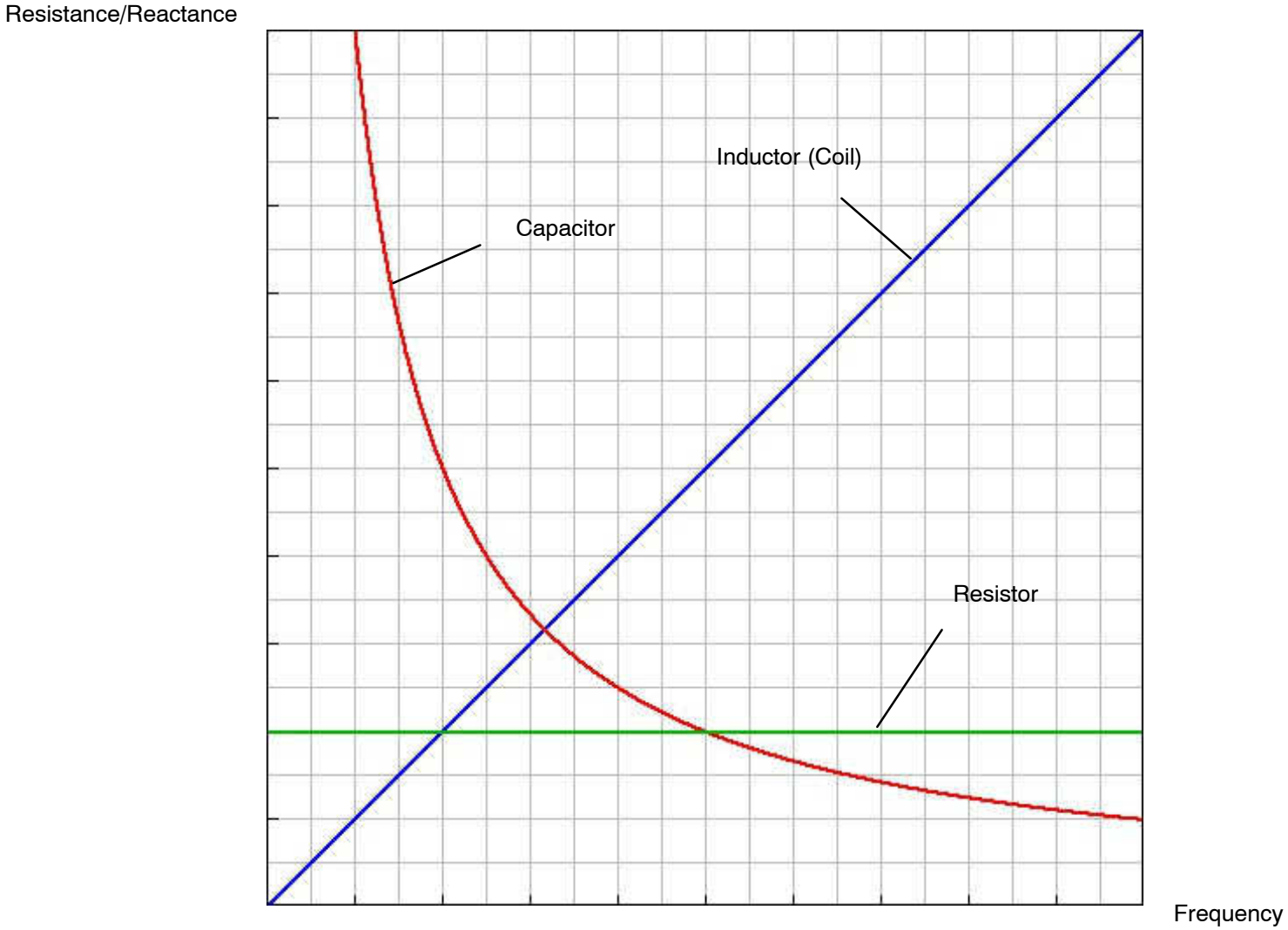

Figure 117 Influence of Frequency on Resistance and Reactance

FOR TRAINING PURPOSES ONLY!

© Lufthansa Technical Training

IMPEDANCE

General

The total resistance of an inductor applied to AC consists of the ohmic resistance from the winding itself and the inductive reactance.

Capacitors also have a reactance.

Total Resistance

The total resistance of a component with ohmic and reactive resistance is referred to as impedance.

Symbol for Quantity and Unit

The symbol for impedance is Z .

The impedance is measured in ohms (Ω).

Calculation

The impedance can be calculated by using Ohms Law from the RMS values of current and voltage measured with a multimeter.

Impedance $Z = \frac{U}{I}$

With this formula adapted to calculate I, it is possible to calculate the current in an AC circuit.

$$I = \frac{U}{Z}$$

Example

An inductor consisting of ohmic resistance and inductive reactance is applied to 230 V AC. Its current is 0.5 A.

What is the impedance of the inductor?

$$Z = \frac{230V}{0.5A} = 460\Omega$$

Calculations using the ohmic resistance and the inductive reactance are far more complicate as they have a 90° phase shift.

FOR TRAINING PURPOSES ONLY!

© Lufthansa Technical Training

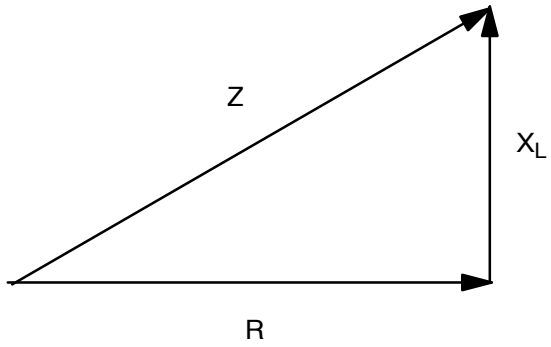

Figure 118 Impedance

FOR TRAINING PURPOSES ONLY!

© Lufthansa Technical Training

CIRCUITS WITH AC RESISTORS

Resistor and Coil in Series

The series connection of an effective resistance and an inductive reactance shows the equivalent circuit diagram of a coil.

For further examination of the series connection only the RMS values of current and voltage are used.

Current

The same current I flows through both resistors (RMS values).

The current causes a drop in effective voltage U_R across the effective resistance R and a drop in reactive voltage U_L across the reactance X_L.

Voltage

The voltage U_R acts in the same direction as the current flows through the resistance R.

Hence the voltage U_R is in phase with the current I. In the reactance the current I lags the voltage U by 90° or, in other words, the voltage U_L leads the current I by 90°.

Diagram

To make it simpler, RMS values are used for current phasors and voltage phasors. Before drawing phasor diagrams, the scales for current and voltage are defined.

The basis for drawing phasor diagrams is the electrical quantity that the resistances have in common, i.e. the quantities which are identical. As all other phasors refer to it, this quantity is referred to as reference phasor.

Regarding series connections, the current is the reference phasor, because it is the same for all resistances.

The reference phasor, which is the current I here, is placed in the horizontal reference axis.

The voltage phasor U_R (effective voltage) has the same direction as the current phasor I. The voltage phasor U_L (reactive voltage) is perpendicular to the current phasor and points up (leading the current I).

In the phasor diagram the RMS values and the reactive values are always perpendicular to each other.

Calculation

It can be seen from the phasor diagram that the applied total voltage U cannot be determined any more by simply adding the voltage values, but by geometric addition.

A common (algebraic) addition of both voltage values would lead to incorrect results.

Geometric Addition of Voltages

For this purpose we draw a parallelogram.

The resulting diagonal line represents a geometrical sum. From this sum the size and the direction can be determined. The geometric addition of the phasors U_R and U_L leads to the total voltage U (applied voltage). The phasor length indicates the amount of voltage U, the position of the phasor indicates the phase angle between the applied voltage U and the current I.

The current lags the voltage by a phase angle between 0° and 90°.

The phase angle is called φ (Greek small phi).

Voltage Triangle

In the phasor diagram of the series connection, the three voltages rotate evenly around a common centre of rotation. Hence the position of the three voltages towards each other stays the same.

To make it even simpler, the three voltages can be combined to a voltage triangle. This is achieved by moving the reactive voltage U_L parallel to the arrowhead of the effective voltage U_R. The phasor U remains the same in both size and direction.

As RMS values and reactive values are always perpendicular to each other in the phasor diagram, the voltage triangle is always a right triangle.

FOR TRAINING PURPOSES ONLY!

© Lufthansa Technical Training

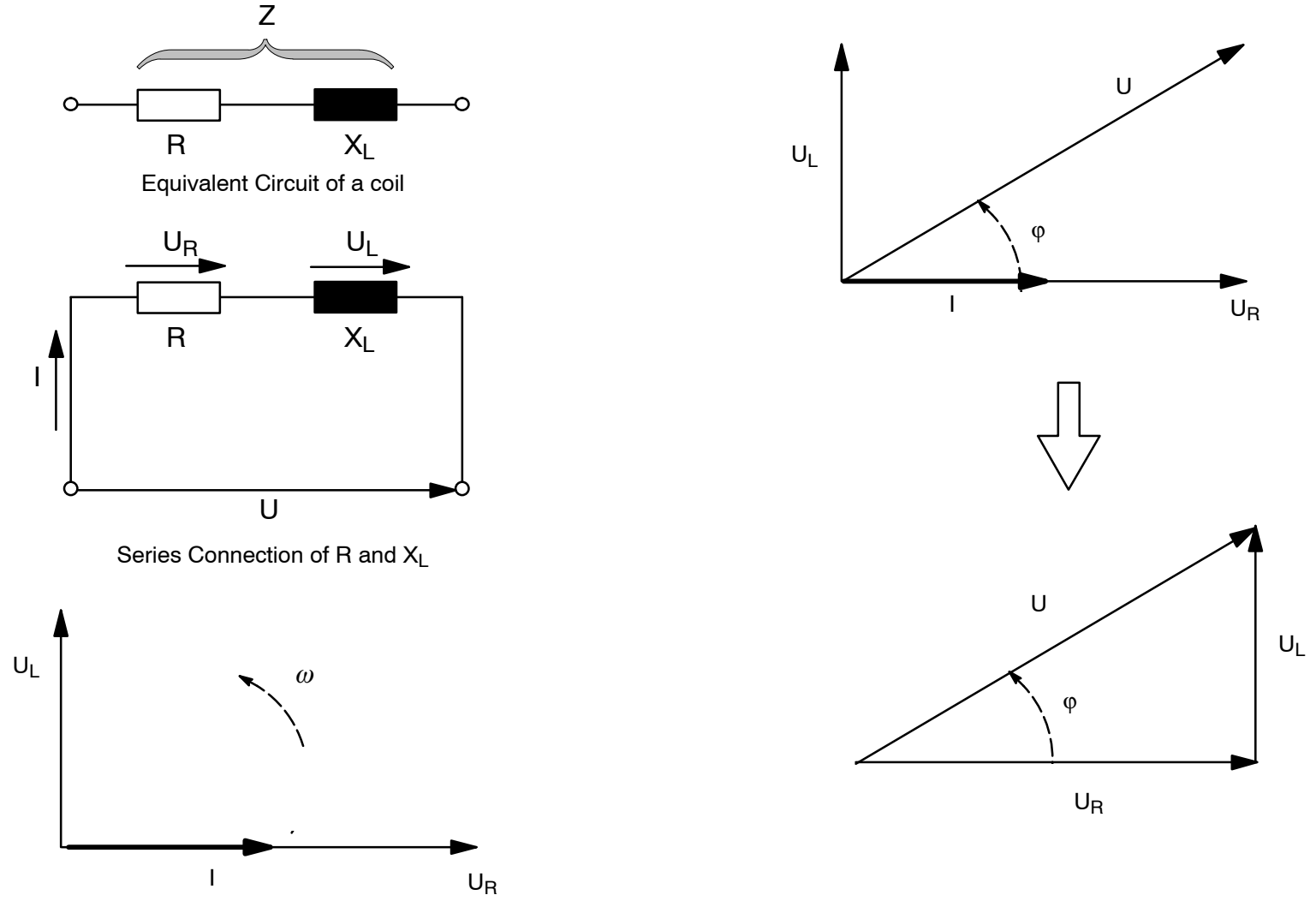

Figure 119 Series Connection of Resistor and Coil

FOR TRAINING PURPOSES ONLY!

© Lufthansa Technical Training

Arithmetic Addition of Voltages

In a right angled triangle each side (hypotenuse, catheti) can be separately calculated with Pythagoras' theorem.

Condition for a voltage triangle:

$$U^2 = U_R{}^2 + U_L{}^2$$

Total voltage:

$$U = \sqrt{U_R{}^2 + U_L{}^2}$$

We invert the equation to obtain:

Effective voltage:

$$U_R = \sqrt{U^2 - U_L{}^2}$$

Reactive voltage:

$$U_L = \sqrt{U^2 - U_R{}^2}$$

Voltage Triangle

Another way to calculate the sides and therefore the angles of a right angled triangle are to use trigonometric functions:

$$\cos\varphi = \frac{U_R}{U}$$

$$\sin\varphi = \frac{U_L}{U}$$

effective voltage:

$$U_R = U \times \cos\varphi$$

reactive voltage:

$$U_L = U \times \sin\varphi$$

FOR TRAINING PURPOSES ONLY!

© Lufthansa Technical Training

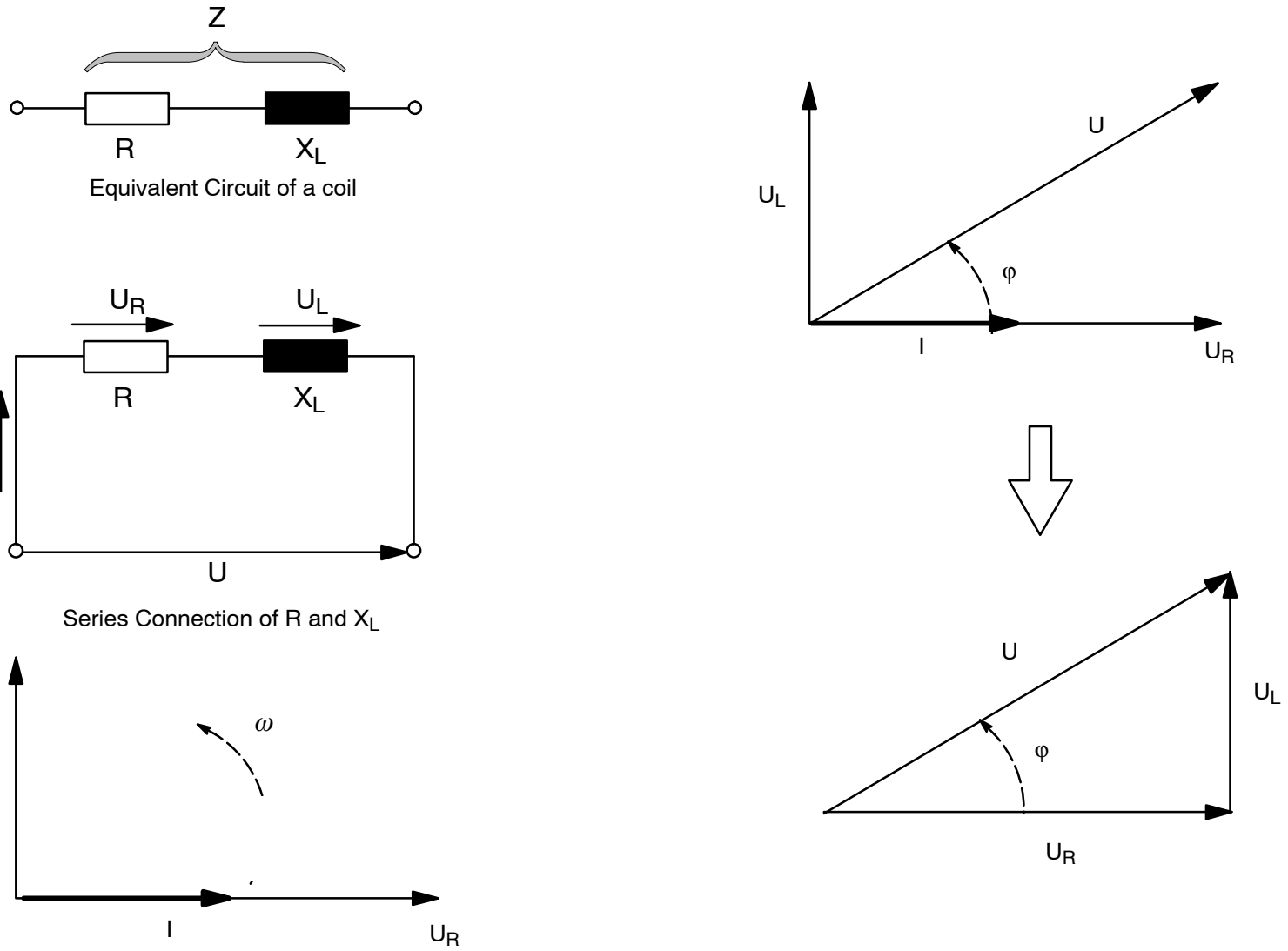

Figure 120 Series Connection of Resistor and Coil

FOR TRAINING PURPOSES ONLY!

© Lufthansa Technical Training

The Impedance Triangle

If, in a series connection consisting of an effective resistance and an inductive reactance, the three voltages are divided by the common current I, the result is:

- Impedance:

$$Z = \frac{U}{I}$$

- Effective resistance:

$$R = \frac{U_R}{I}$$

- Inductive reactance:

$$X_L = \frac{U_L}{I}$$

The three resistances are proportional to their associated voltages. If all sides of the voltage triangle are divided by the amount of the current I, the result is a right angle triangle (the impedance triangle). This triangle is similar to the voltage triangle.

$$Z = \sqrt{R^2 + {X_L}^2}$$

The impedance (equivalent resistance) of a series connection results from the geometric addition of the different individual resistances.

The impedance can be determined by drawing (design of the impedance triangle to scale) or by calculation (Pythagoras' theorem or trigonometric functions).

Another possibility is to determine the impedance from total current and total voltage.

Example

What is the value of the impedance of a coil if the effective resistance is 30 Ohms and the inductive reactance 90 Ohms?

(Solution by drawing and by calculation)

given: R = 30 Ω X_L = 90 Ω

required: Z

Trigonometric Function

Using the trigonometric functions gives:

Effective resistance:

$$R = Z \times \cos\varphi$$

Inductive Reactance:

$$X = Z \times \sin\varphi$$

FOR TRAINING PURPOSES ONLY!

© Lufthansa Technical Training

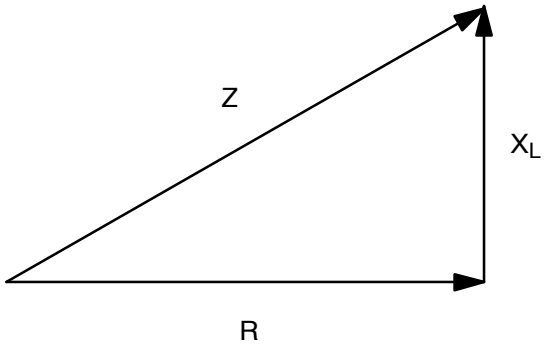

Figure 121 Impedance

FOR TRAINING PURPOSES ONLY!

© Lufthansa Technical Training

Calculation of Missing Parameters

By using the impedance triangle the missing side can be determined by drawing.

Solution by Drawing

In our example 1 cm is 20 Ohms (= the scale).

The resulting lengths are represented in the sides of the impedance triangle. These two sides enclose the right angle.

By connecting the starting point with the end point, you get the impedance Z.

Measured: Z = 4,75 cm, which equals = 95 Ω.

Solution by Calculation

$$Z = \sqrt{R^2 + X_L^{\ 2}} = \sqrt{30^2 + 90^2} = 94,86\Omega$$

Example

A coil that has an effective resistance of 12 Ohms and is applied to an AC voltage of 36 V at 50 Hz has a current consumption of 2 A.

Calculate the:

1. impedance
2. inductive reactance
3. effective voltage
4. reactive voltage

1. $Z = \frac{U}{I} = \frac{36V}{2A} = 18\Omega$
2. $X_L = \sqrt{Z^2 - R^2} = \sqrt{18^2 - 12^2} = 13,41\ \Omega$
3. $U_R = U \times \frac{R}{Z} = 36V \times 0,66 = 24\ V$
4. $U_L = U \times \frac{X_L}{Z} = 36V \times 0,74 = 26,7\ V$

FOR TRAINING PURPOSES ONLY!

© Lufthansa Technical Training

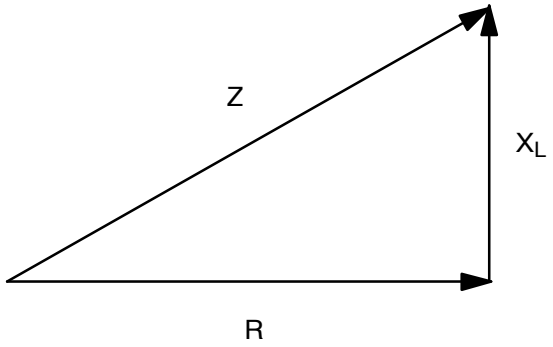

Figure 122 Impedance Triangle

FOR TRAINING PURPOSES ONLY!

© Lufthansa Technical Training

Resistor and Capacitor in Series

In common house installations capacitors and resistors are not often used in a series connection. It is possible to calculate the total resistance which results from the reactance of a capacitor and the resistance of the wire.

Current

The same sinusoidal current with the RMS value I flows through the two components. This current causes the effective voltage U_R and the reactive voltage U_C to drop across the reactance.

Voltage

The voltage U_R is then in phase with the current I.

In the capacitor the current I leads the voltage U_C by 90° or, in other words, the voltage lags the current by 90°. Current I and voltage U_C are out of phase by 90°.

Diagram

The reference phasor is the current I. It is placed in the horizontal reference axis.

The voltage phasor U_R (effective voltage) points in the same direction as the current phasor; the voltage phasor U_c (reactive voltage) is perpendicular to the current phasor I and points downwards (lagging the current I).

Regarding a series connection of R and X_C, the total voltage (size and direction) results from the geometric addition of the phasors U_R and U_C.

The current leads the voltage by a phase angle between 0° and 90°.

Geometric Addition of Voltages

To make it easier, the phasor diagram can be expressed as a voltage triangle.

Regarding the voltage triangle for the series connection of R and X_C, all the voltages can be determined by drawing or by calculation. This can be done by applying Pythagoras' Theorem or the trigonometric functions

Total voltage

Effective voltage:

$$U = \sqrt{U_R{}^2 + U_C{}^2}$$

Reactive voltage:

$$U_R = U \times \cos\varphi$$

$$U_C = U \times \sin\varphi$$

The Impedance Triangle

The division of the three voltages by the common current I results in the resistances.

Similarly the resistance triangle develops from the voltage triangle by changing the scale (division by I).

Effective resistance, reactance and impedance can then be determined by drawing (Pythagoras' theorem or trigonometric functions).

Example:

A capacitor with C = 50 µF is connected in series with an effective resistance R = 150 Ω to an AC voltage of 230 V with a frequency of f = 50 Hz.

What is the current consumption of the circuit?

$$X_C = \frac{1}{\omega \text{ x } C} = 63,7\ \Omega$$

$$Z = \sqrt{R^2 + X_C{}^2} = \sqrt{150^2 + 63,7^2} = 162,9\Omega$$

$$I = \frac{U}{Z} = \frac{230\ V}{162,9\ \Omega} = 1,41\ A$$

FOR TRAINING PURPOSES ONLY!

© Lufthansa Technical Training

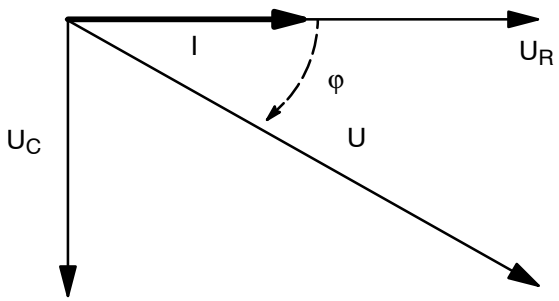

$$impedance\ Z = \frac{U}{I}$$

$$resistance\ R = \frac{U_R}{I}$$

$$capacitive\ reactance\ X_C = \frac{U_C}{I}$$

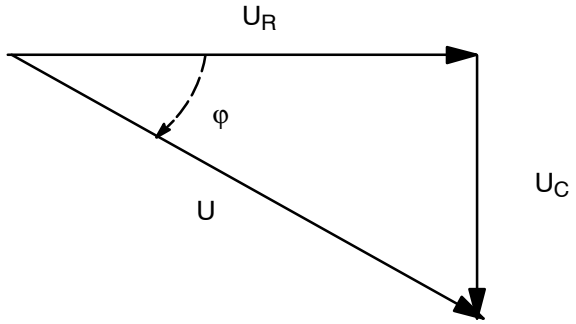

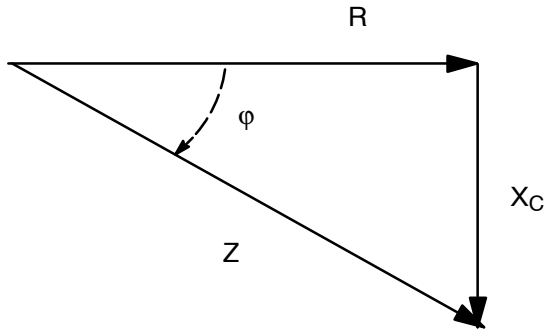

Figure 123 Resistor and Capacitor in Series

FOR TRAINING PURPOSES ONLY!

© Lufthansa Technical Training

Real Capacitors

The parallel connection of an effective resistance and a capacitive reactance represents the equivalent circuit diagram of a capacitor with loss.

For all parallel connections the following applies: The total current is the sum of all individual currents. The voltage at each individual resistance is the terminal voltage.

The applied sinusoidal voltage V drives the effective current I_R through the effective resistance R and the reactive current I_C through the reactance X_C.

Effective current $I_R = \frac{U}{R}$

Reactive current $I_C = \frac{U}{X_C}$

The current I_R acts in the same direction as the applied voltage U, i.e. I_R and U are in phase. The reactive current I_C leads the applied voltage by 90°.

For parallel connections the voltage is the reference phasor, because it is the same for both resistances. The voltage U is placed in the horizontal reference axis. The current phasor I_R (effective current) points in the same direction. The current phasor I_C (reactive current) is perpendicular to the voltage phasor and points upwards (leading the voltage U).

The geometric addition (parallelogram) of the two individual currents results in the total voltage I with size and direction.

The current leads the voltage by a phase angle between 0° to 90°.

Regarding the capacitor with loss, the phase angle is little less than 90°.

Current Triangle

By moving the current phasor I_C in the phasor diagram parallel until the arrowhead of the effective current I_R, we obtain the so–called current triangle, which is a right triangle.

With the aid of Pythagoras' theorem or the trigonometric functions, we derive from the current triangle:

$I^2 = I_R^2 + I_C^2$

$I_R = I \times \cos \varphi$

If the currents of the parallel connection are divided by the common voltage U, we obtain the conductance values (admittance, conductance, susceptance), which can be illustrated in a conductance triangle.

As these conductance issues are not important in practice, they are not further illustrated in diagrams or in formula's.

Example

A capacitor with C = 500 nF and a resistor with R = 3 KΩ are connected in parallel to a power supply of 230 V at 50 Hz.

What is the current in the connection lead?

What is the phase angle?

Given: C = 500 nF, R = 3 KΩ, U = 230 V, f = 50 Hz

Required:

a) I

b) φ

$I_R = \frac{U}{R} \quad I_R = \frac{230\ V}{3000\ \Omega} = 0,076\ A$

$X_C = \frac{1}{\omega \times C} = 6369\ \Omega$

$I_C = \frac{U}{X_C} \quad I_C = \frac{230\ V}{6369\ \Omega} = 0,036\ A$

$I^2 = I_R^{\ 2} + I_C^{\ 2} = 0,084\ A$

$\cos \varphi = \frac{I_R}{I} = \frac{0,076\ A}{0,084\ A} = 0,903$

$\varphi = 25,3°$

The common voltage U causes the effective current I_R (in phase with U), the inductive reactive current I_L (lagging V by 90°) and the capacitive reactive current I_C (leading U by 90°).

FOR TRAINING PURPOSES ONLY!

© Lufthansa Technical Training

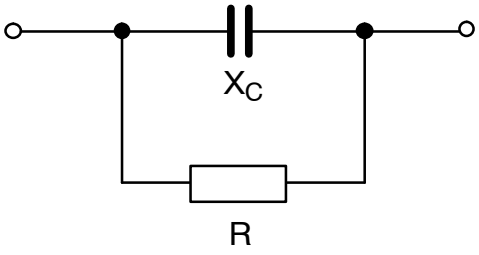

Capacitor with Losses

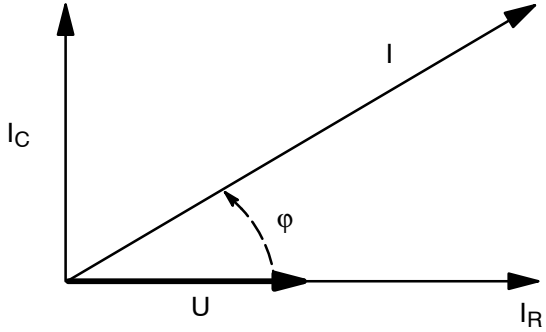

Phasor Diagram

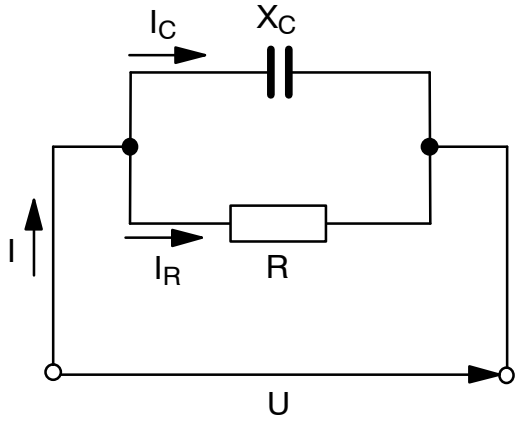

Parallel Connection of R and X_C

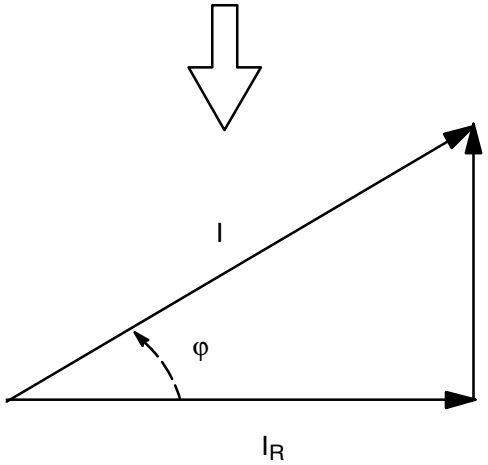

Current Triangle

Figure 124 Resistor and Capacitor in parallel

FOR TRAINING PURPOSES ONLY!

© Lufthansa Technical Training

RESISTOR, COIL AND CAPACITOR IN SERIES

Circuit

The common sinusoidal current I causes the effective voltage drop U_R and the reactive voltage drops U_L and U_C.

Note that in the coil the voltage leads the current and in the capacitor the voltage lags the current.

Diagram

The current I is the reference phasor.

The voltage phasors U_L and U_c have a phase angle of 180°. They act in opposite direction to each other and can therefore be subtracted from one another. Together with the voltage phasor, the geometric sum of all individual voltages represent the phasor of the total voltage.

The Impedance Triangle

By dividing all individual voltages by I, you obtain all the resistances, and also for example the impedance (total resistance) Z.

$$Z = \frac{U}{I}$$

In the same way the voltage triangle leads to the similar resistance triangle.

The following equation can be derived for the impedance:

$$Z = \sqrt{R^2 + (X_L - X_C)^2}$$

From this equation and the three resistance triangles the following can be seen:

If the inductive reactance X_L is higher than the capacitive reactance X_C, the circuit is mainly inductive.

If it is opposite, when the capacitive reactance X_C is higher than the inductive reactance X_L ($X_C > X_L$), the circuit is mainly capacitive. If both reactances have the same size, the circuit operates like an Ohmic load. The total resistance is then the lowest and the current the highest.

FOR TRAINING PURPOSES ONLY!

© Lufthansa Technical Training

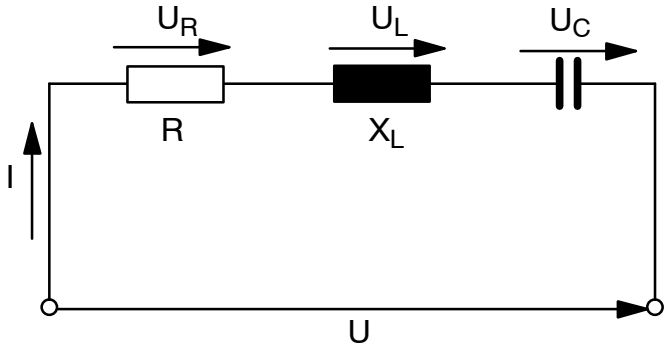

$$U = \sqrt{U_R^2 + (U_L - U_C)^2}$$

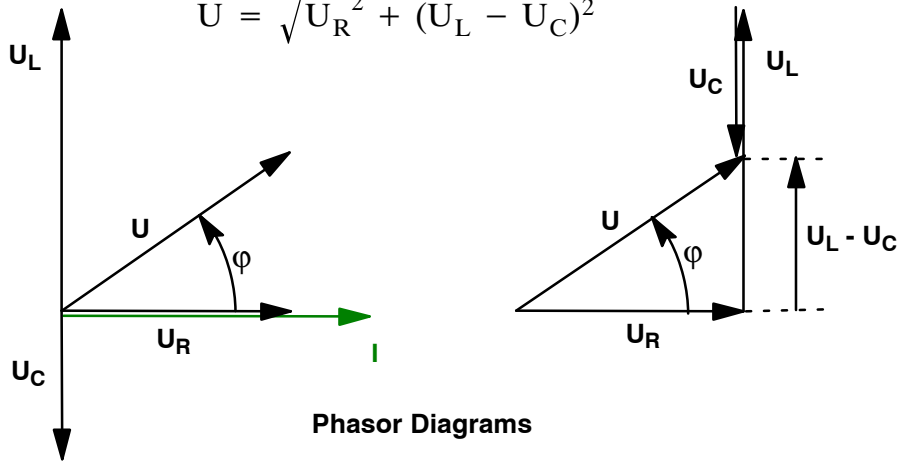

Phasor Diagrams

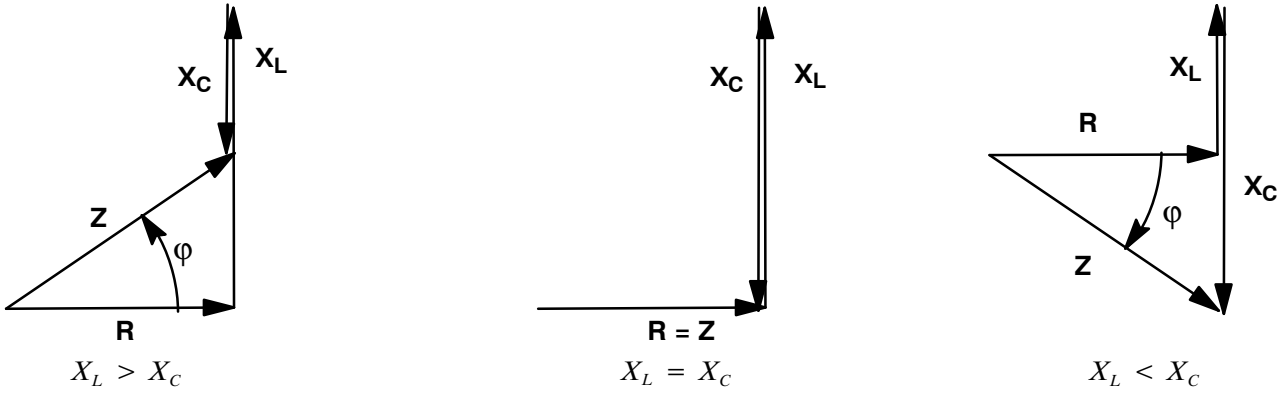

Resistance triangles for series connection of R, X_L and X_C for different resistance values

Figure 125 Resistor, Coil and Capacitor in Series

FOR TRAINING PURPOSES ONLY!

© Lufthansa Technical Training

RESISTOR, COIL AND CAPACITOR IN PARALLEL

Circuit

With the components connected in parallel, the voltage is the same for all components in the circuit. But for the currents there is a phase shifting.

Diagram

By geometric addition of all individual currents, we obtain the phasor of the total current. From the right angle we can derive:

From this equation as well as from the three current triangles we can see the following: If the current in the inductive reactance is higher than in the capacitive reactance, the circuit is inductive. If it is higher in the capacitive reactance, the circuit is capacitive. If the reactances (currents) have the same size, the circuit operates purely as an ohmic load. The current in the circuit is then at its minimum.

The voltage V is the reference phasor. The current phasor I_L and I_C have a phase angle of exactly 180° and can therefore simply be subtracted from each other. In order to determine the currents, the following equations are used:

Effective current $I_R = \frac{U}{R}$

Inductive reactive current $I_L = \frac{U}{X_L}$

Capacitive reactive current $I_C = \frac{U}{X_C}$

The Conductance Triangle

By dividing the current triangle by the voltage U, we obtain the similar conductance triangle.

Example

A coil without loss with L = 500 mH and a capacitor with C = 20 µF are connected in parallel to a power supply with 230 V at 50 Hz.

What are the currents:

a) in the capacitor,

b) in the coil,

c) in the lead?

given: L = 500 mH, C = 20 µF, U = 230 V, f = 50 Hz

required: I_C, I_L, I

Solution:

a)

$$X_C = \frac{1}{\omega \times C} = \frac{1}{314\frac{1}{s} \times 20 \times 10^{-6}F} = 159\Omega$$

$$I_C = \frac{U}{X_C} = \frac{230V}{159\Omega} = 1,45A$$

b)

$$X_L = \omega \times L = 314\frac{1}{s} \times 0,5H = 157\Omega$$

$$I_L = \frac{U}{X_L} = \frac{230V}{157\Omega} = 1,46A$$

c)

$$I = I_L - I_C = 1,46A - 1,45A = 10mA$$

FOR TRAINING PURPOSES ONLY!

© Lufthansa Technical Training

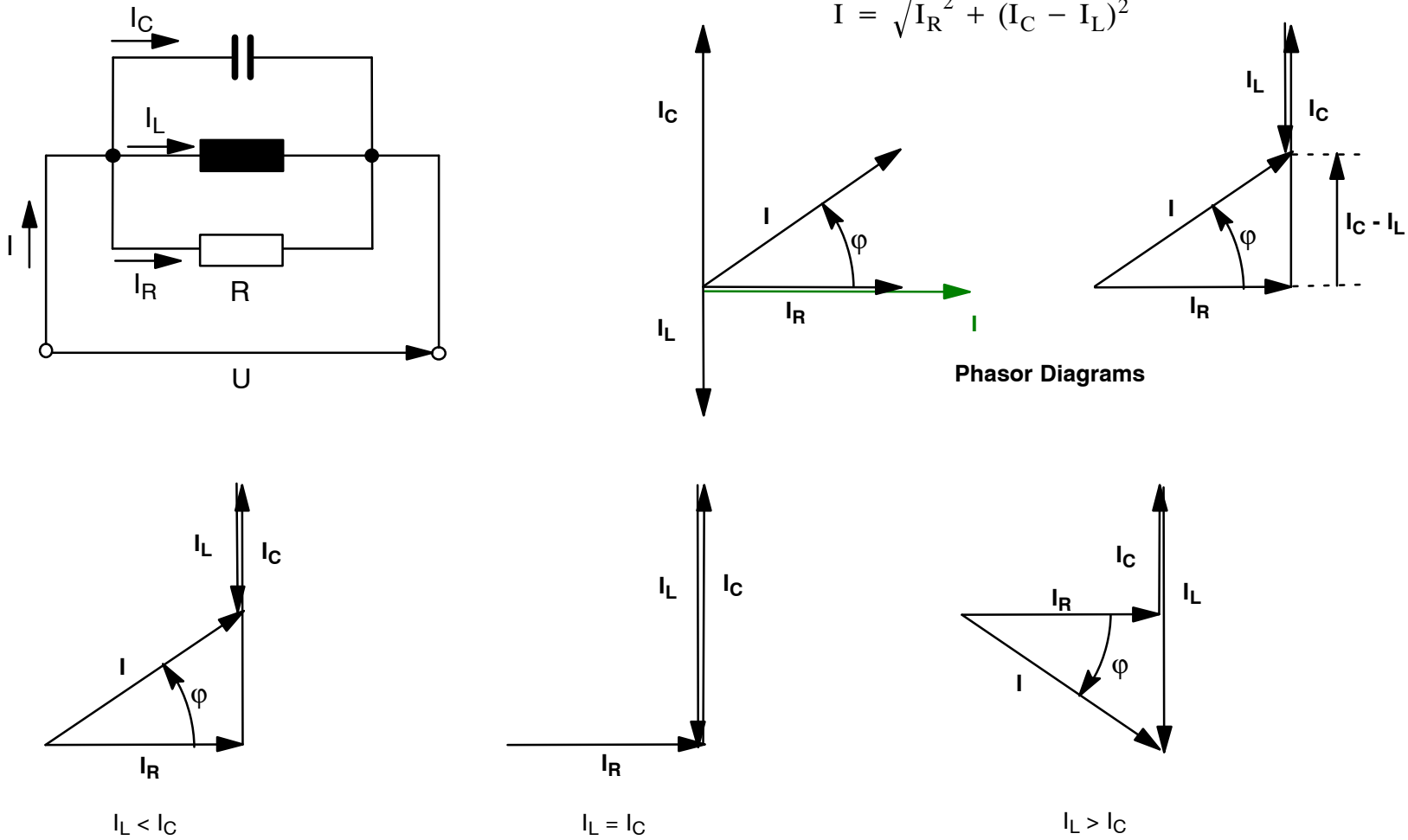

Figure 126 Resistor, Coil and Capacitor in Parallel

FOR TRAINING PURPOSES ONLY!

© Lufthansa Technical Training

TRUE POWER

General

The power phase relationship between voltage and current for DC P = U × I is also valid for AC, if related to the instantaneous values of current and voltage.

Hence: p = u x i

As u and i are time dependent quantities, p will also depend on the time.

Voltage and current are in phase.

Diagram

The diagram below shows the course of voltage and current at active load. Multiplying the related instantaneous values of voltage and current gives the instantaneous values of the power.

The power graph is also a sine curve but has twice the frequency of the voltage and remains constantly in the positive area (above zero reference line). That means that power is constantly drawn from the mains and converted into heat, even if voltage and current are negative.

This kind of power is hence referred to as true power (or also known as effective power).

It is remarkable that the true power of the AC varies constantly between zero and a maximum value. At frequencies lower than 50 Hz this would lead to light fluctuation in light bulbs. As the bulb cools down quite slowly, this fluctuation cannot be detected at 50 Hz.

Average Value

The average value of this true power is an interesting fact. Looking at the power graph it can be noted, that the average value of the power must be at $\frac{1}{2}\,\hat{u}$.

$\hat{p}$ (say p hat) was derived from $\hat{p} = \hat{u} \times \hat{i}$.

General true power $P = U \times I_{R;}$

P = power in W

U = voltage in V

I_R = effective current in A

Symbol for Quantity and Unit

The symbol for true power is P .

The true power is measured in watt (W).

Formula for Load with Ohmic Resistance

The true power of an effective resistance is the product of the RMS values of voltage and current.

$$P = U \times I$$

FOR TRAINING PURPOSES ONLY!

© Lufthansa Technical Training

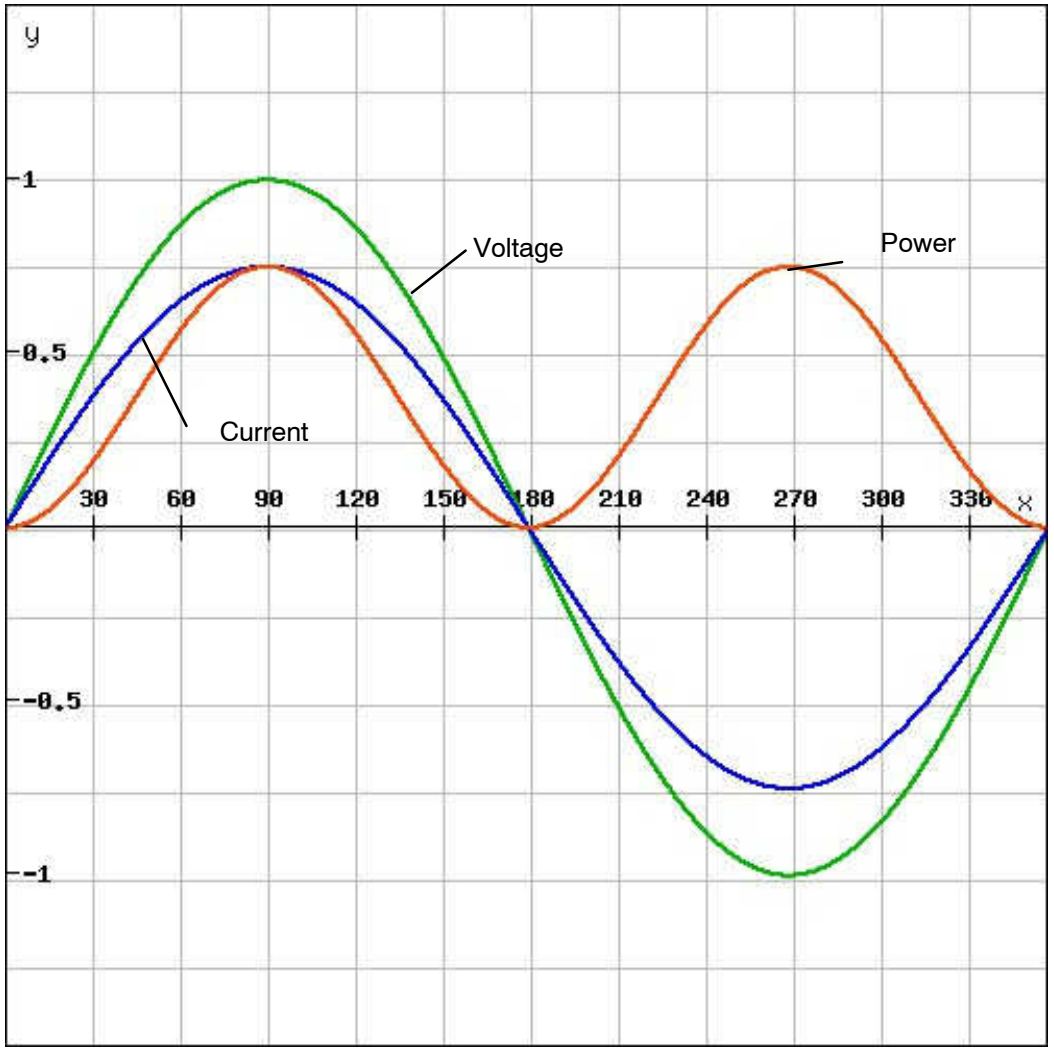

Figure 127 Power at True Load

FOR TRAINING PURPOSES ONLY!

© Lufthansa Technical Training

REACTIVE POWER

Power at Inductive Load

At inductive load the current lags the voltage by 90°.

Diagram

Multiplying the related instantaneous values of current and voltage leads to the power graph.

Again, the power graph has a sine waveform with twice the frequency, which consists of positive and negative alternations.

As positive power is equivalent to the power drawn from the mains, negative power must be fed back into the mains accordingly.

The power briefly drawn from the mains builds up a magnetic field. The power, which then is fed back into the mains, is generated when the magnetic field decomposes.

The energy permanently oscillates between generator and load.

This power is not converted into effective energy (heat, light, mechanical energy). It is called inductive reactive power. The true power is zero.

Symbol for Quantity and Unit

The symbol for reactive power is Q .

The symbol for inductive reactive power is Q_L .

The reactive power is measured in VAr. In formulae, it is written var .

(VAr = Volt – Ampere – reactive).

Formula

The inductive reactive power is the product of the RMS values of voltage and capacitive reactive current.

Reactive power: $Q_L = U \times I_L$

Q_L inductive reactive power in VAr

U voltage in V

I_L inductive reactive current in A

FOR TRAINING PURPOSES ONLY!

© Lufthansa Technical Training

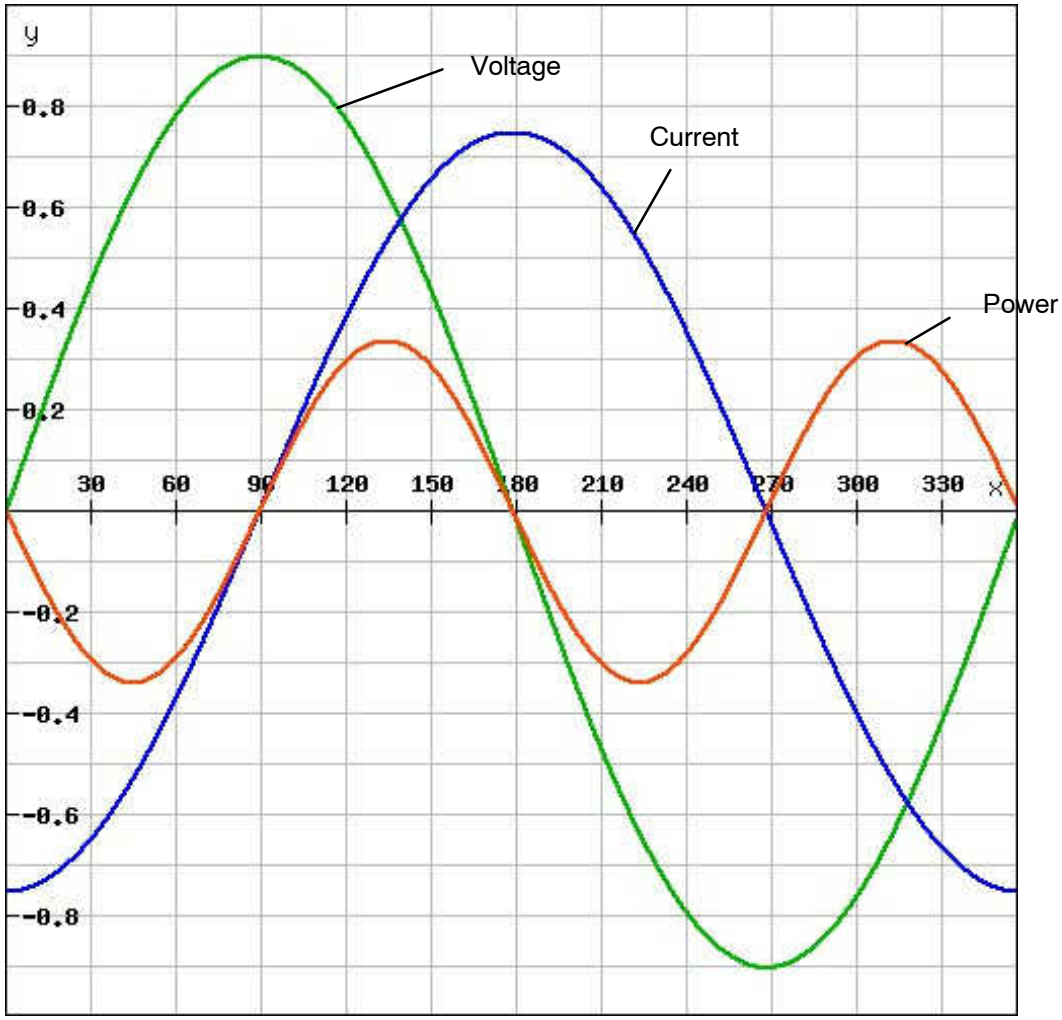

Inductive Load (coil)

Figure 128 Reactive Power (inductive load)

FOR TRAINING PURPOSES ONLY!

© Lufthansa Technical Training

Power at Capacitive Load

The current leads the voltage by 90°.

Diagram

Multiplying the related instantaneous values of current and voltage leads to the power graph. Again, the power graph has a sine waveform with twice the frequency, which consists of positive and negative alternations.

The positive power builds up a electric field. The power then is fed back to the mains when the magnetic field decomposes. The energy oscillates permanently between generator and load.

The energy is not converted into effective energy (heat, light, mechanical energy). Thus it is called capacitive reactive power. The true power is zero.

Symbol for Quantity and Unit

The symbol for reactive power is Q .

The symbol for capacitive reactive power is Q_C .

The reactive power is measured in VAr. In formulae, it is written var .

Formula

The capacitive reactive power is the product of the RMS values of voltage and capacitive reactive current.

Reactive power: $Q_C = U \times I_C$

Q_C capacitive reactive power in VAr

U voltage in V

I_C capacitive reactive current in A

FOR TRAINING PURPOSES ONLY!

© Lufthansa Technical Training

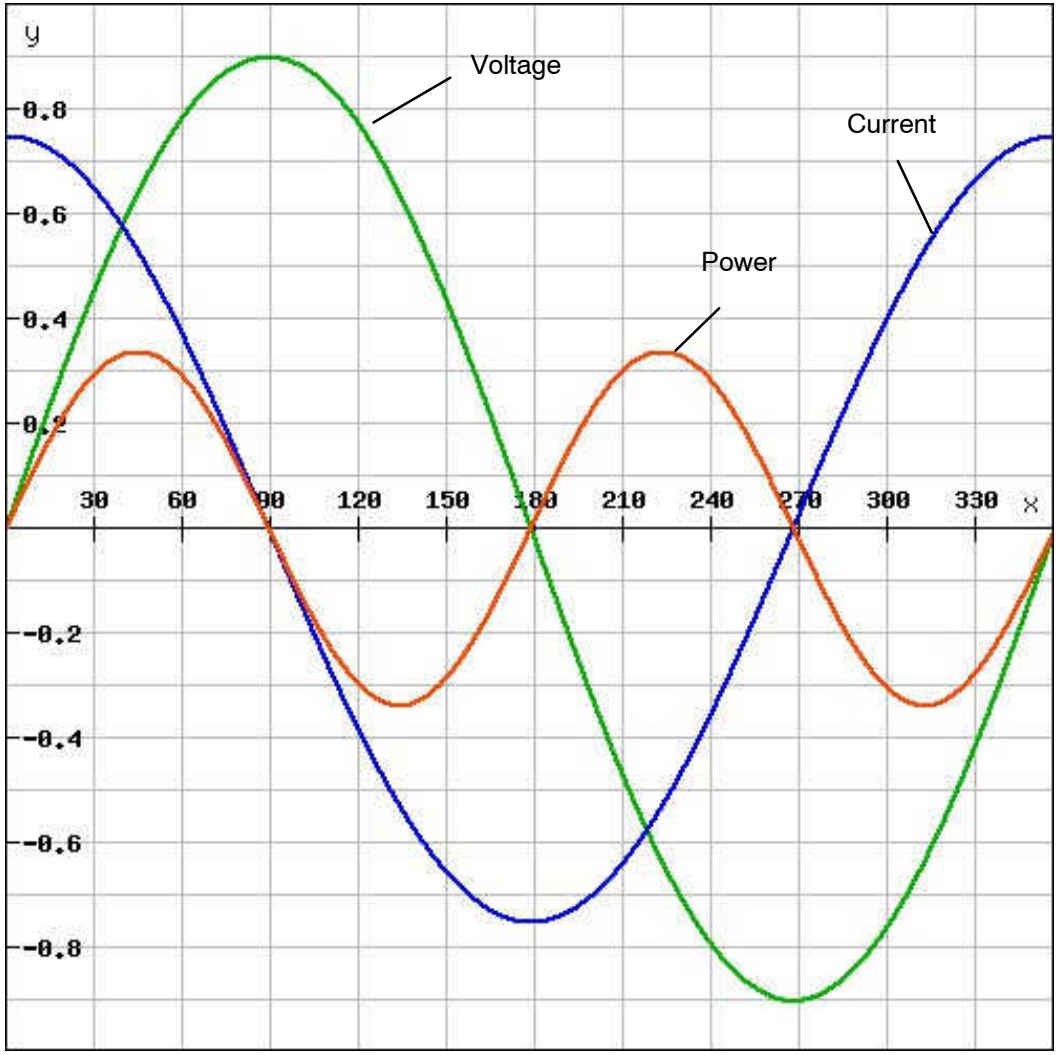

Capacitive Load (capacitor)

Figure 129 Reactive Power (capacitive load)

FOR TRAINING PURPOSES ONLY!

© Lufthansa Technical Training

APPARENT POWER

Inductive Circuit

The series connection of effective resistance and inductive reactance represents the equivalent circuit diagram for a coil with loss.

The current lags the voltage (in this example by 60°).

Diagram

Multiplying the related instantaneous values of current and voltage leads to the power graph. Again, the power graph has a sine waveform with twice the frequency.

Positive and negative power values occur which do not have the same quantity. The power graph mainly runs above the time axis. Hence, true power and inductive reactive power occur at the same time.

However, these values overlay in the circuit. The resultant force is called apparent power.

The wording results in the use of the formula $P = U \times I$, but this will not result in true power but in apparent power. To calculate true power, this formula is correct for ohmic loads only.

With this formula the true power can not be calculated if there is any reactive power dissipation in the circuit. The true load is lesser than the apparent load.

Symbol for Quantity and Unit

The symbol for apparent power is S .

The apparent power is measured in Volt-Ampere [VA].

Formula

Apparent power: $S = U \times I$

S apparent power in VA

U voltage in V

I current in A

FOR TRAINING PURPOSES ONLY!

© Lufthansa Technical Training

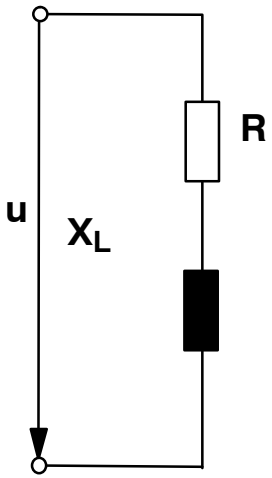

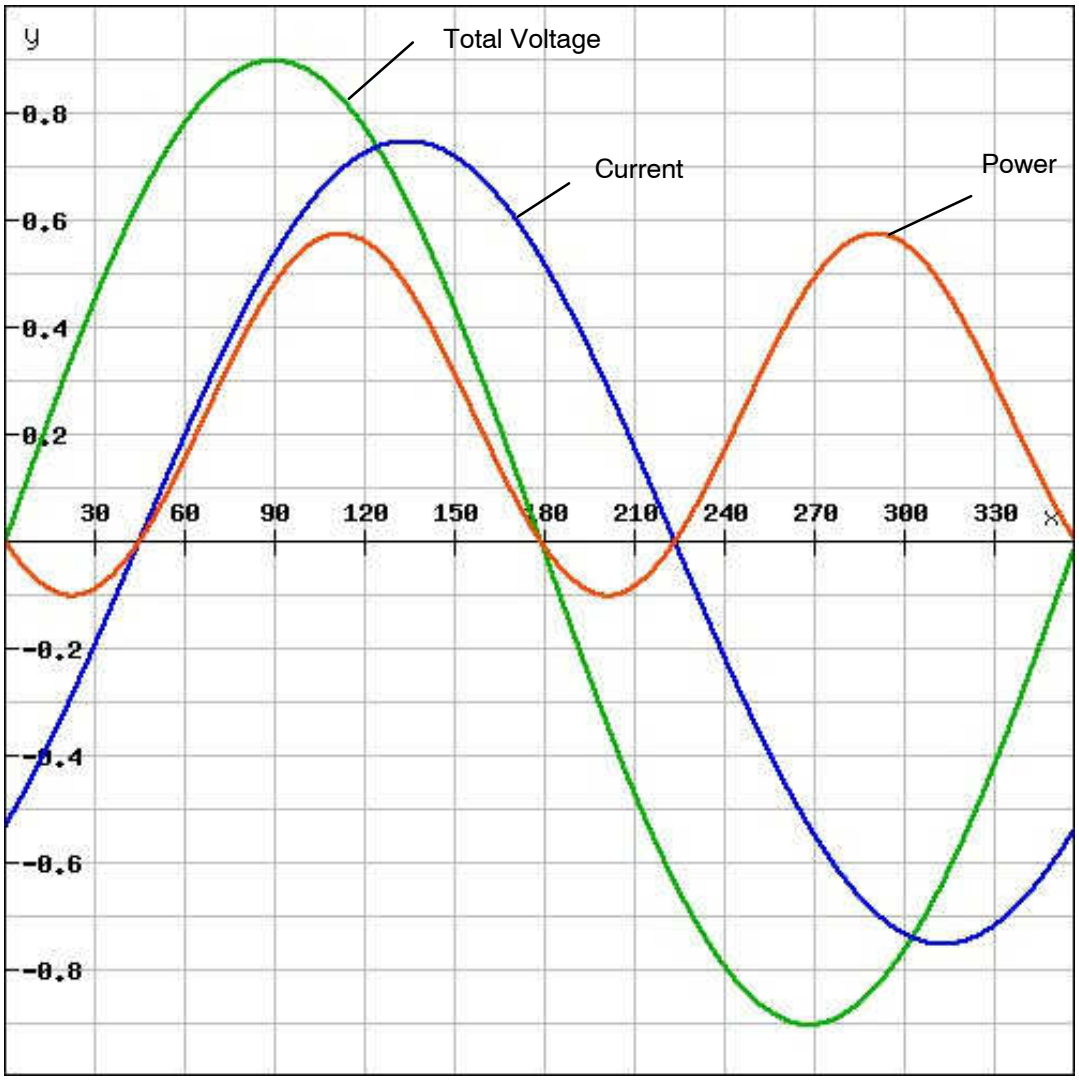

Figure 130 Apparent Power

FOR TRAINING PURPOSES ONLY!

© Lufthansa Technical Training

POWER FACTOR

Trigonometry

If you know the length of two sides in a rectangular triangle, Pythagoras' theorem can be used to calculate the third side.

If you know the length of only one side and the angle φ you can calculate the two other sides.

Conversely, when you know to sides in a rectangular triangle you can calculate the angle φ.

Cosine φ

The power factor indicates the percentage of apparent power that is converted into true power.

The more the power factor cos φ comes close to 1, the higher the true power is. The more the power factor comes close to zero, the higher is the portion of reactive power contained in the apparent power.

The power factors are usually the result of an inductive reactive power (motors, transformers, chokes for fluorescent lamps).

In practice, the aim is a power factor cos φ that is as close as possible to 1, because the true power then is as high as possible. That means that less reactive power (reactive current) has to be transported to the load. The reactive power is an additional load on generators, transformers and the wiring.

So the operating costs increase unnecessarily.

Formula

This formula is used to calculate true power. It can be used if there are reactive loads or not.

$$P = U \times I \times \cos \varphi$$

As a result, this is true:

$$P = S \times \cos \varphi$$

The power factor cos φ shows how much true power is contained in the apparent power.

Calculation of cos φ

$$\text{Power Factor} = \frac{(\text{True Power})}{(\text{Apparent Power})}$$

$$\cos \varphi = \frac{P}{S}$$

FOR TRAINING PURPOSES ONLY!

© Lufthansa Technical Training

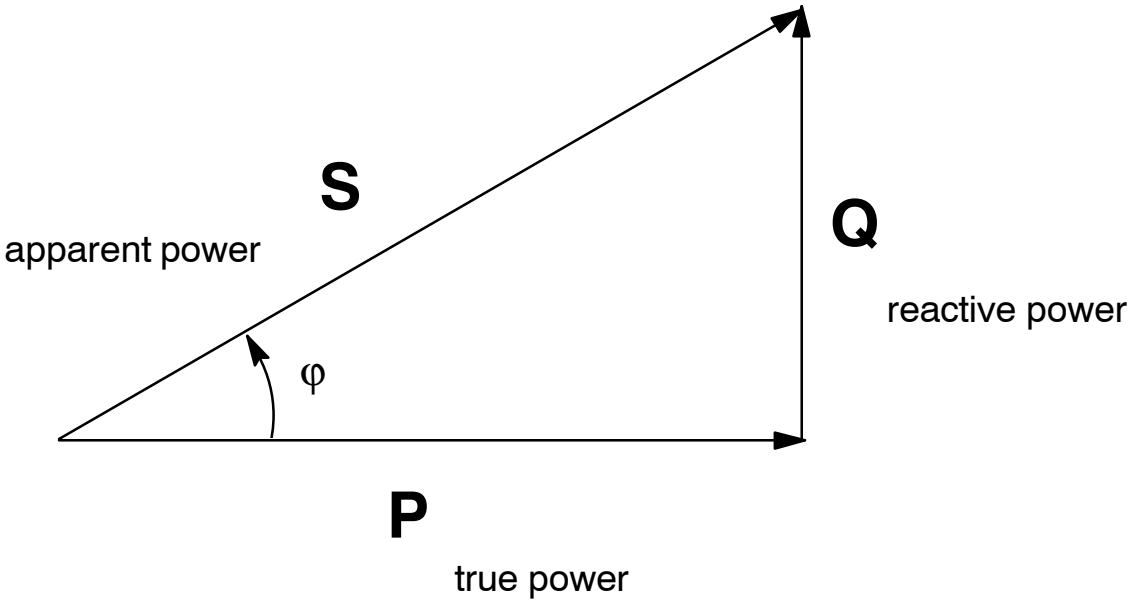

Figure 131 Power Factor

FOR TRAINING PURPOSES ONLY!

© Lufthansa Technical Training

CALCULATION OF POWER

The Power Triangle and Power Equations

The phasor diagram for the series connection of inductive resistance and reactance leads to the voltage triangle.

If you multiply the voltage triangle by the current I, you obtain the similar power triangle.

It can be concluded that the result of the geometric addition of true and reactive power is the apparent power.

By applying Pythagoras' theorem and the trigonometric functions the following relationship becomes clear:

$S^2 = P^2 + Q^2$

Apparent power:

$$S = \sqrt{P^2 + Q^2}$$

True power:

$$P = \sqrt{S^2 - Q^2}$$

Reactive power:

$$Q = \sqrt{S^2 - P^2}$$

Cosine φ

Calculation with Power Factor cos φ

With S = U x I follows:

$$P = U \times I \times \cos\varphi$$

$$Q = U \times I \times \sin\varphi$$

Example 1

A brake magnet designed for 230 V AC voltage consumes a true power of 150 W and a current of 1 A.

Calculate:

1. apparent power
2. reactive power

$S = U \times I = 230V \times 1A = 230VA$

$Q = \sqrt{S^2 - P^2} = \sqrt{230^2 - 150^2} = 174,3\ \text{var}$

Example 2

At 230 V operating voltage an AC motor consumes a current of 10 A at a power factor of 0.8.

Calculate:

1. apparent power
2. true power
3. reactive power

$S = U \times I = 230\ V \times 10\ A = 2300\ VA$

$P = S \times \cos\varphi = 2300\ VA \times 0,8 = 1840\ W$

$Q = S \times \sin\varphi = 2300\ VA \times 0,6 = 1380\ \text{var}$

Construction of Components

AC generators and transformers must mainly deliver an output of true and reactive power. Therefore, they must be designed for true and reactive power i.e. apparent power.

For this reason the power of AC generators and transformers is given in VA.

Contrary to that, name plates of engines indicate the mechanical output power delivered to the shaft, because this is the subject of interest.

The electrical part, including transmission lines, however, must also be designed for the apparent power.

FOR TRAINING PURPOSES ONLY!

© Lufthansa Technical Training

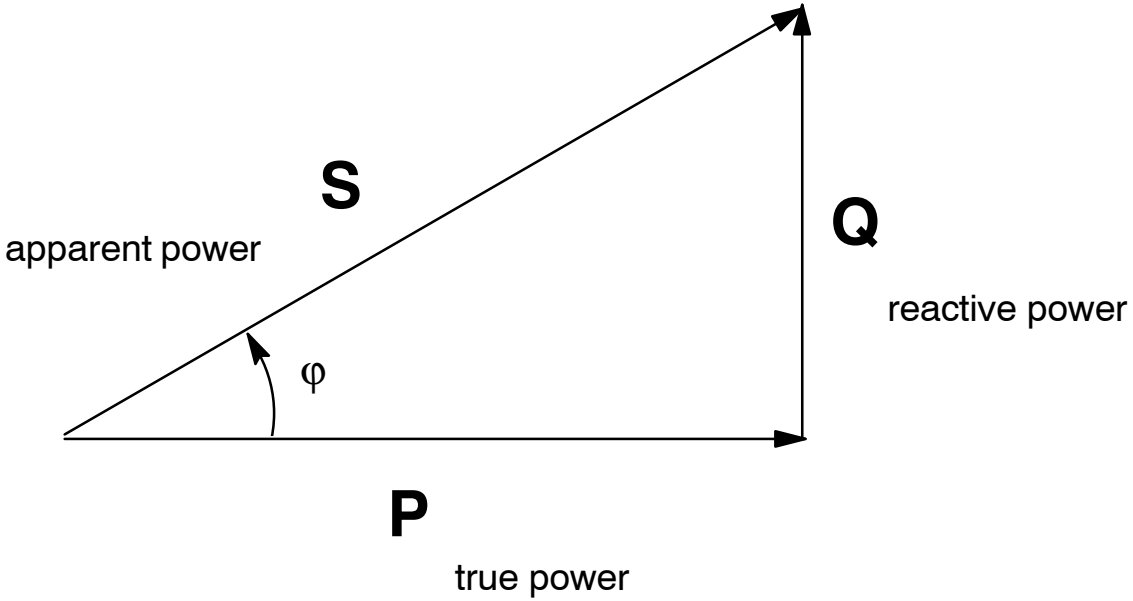

Figure 132 Power Factor

FOR TRAINING PURPOSES ONLY!

© Lufthansa Technical Training

WORK IN AC CIRCUITS

General

Work or electrical energy is power multiplied with time.

$$W = P \times t$$

This is also valid for AC. The areas enclosed by the power graphs represent the work.

Formula

There are two forms of work:

Active energy: $\mathbf{W_{active}} = P \times t = U \times I \times \cos\varphi \times t$

reactive energy: $\mathbf{W_{reactive}} = Q \times t = U \times I \times \sin\varphi \times t$

Example

An AC motor is connected in series with a supply meter to the mains. This meter measures the active energy. During a three hour operation the meter starts at 3200 and goes up to 3205 kWh.

The motor consumes a current of 9 A at a voltage of 230 V.

What is the power factor of the motor?

$$W_{active} = U \times I \times \cos\varphi \times t$$

$$\cos\varphi = \frac{W_{active}}{U \times I \times t} = \frac{5000\ \text{Wh}}{230\ \text{V} \times 9\ \text{A} \times 3\ \text{h}} = 0,805$$

FOR TRAINING PURPOSES ONLY!

© Lufthansa Technical Training

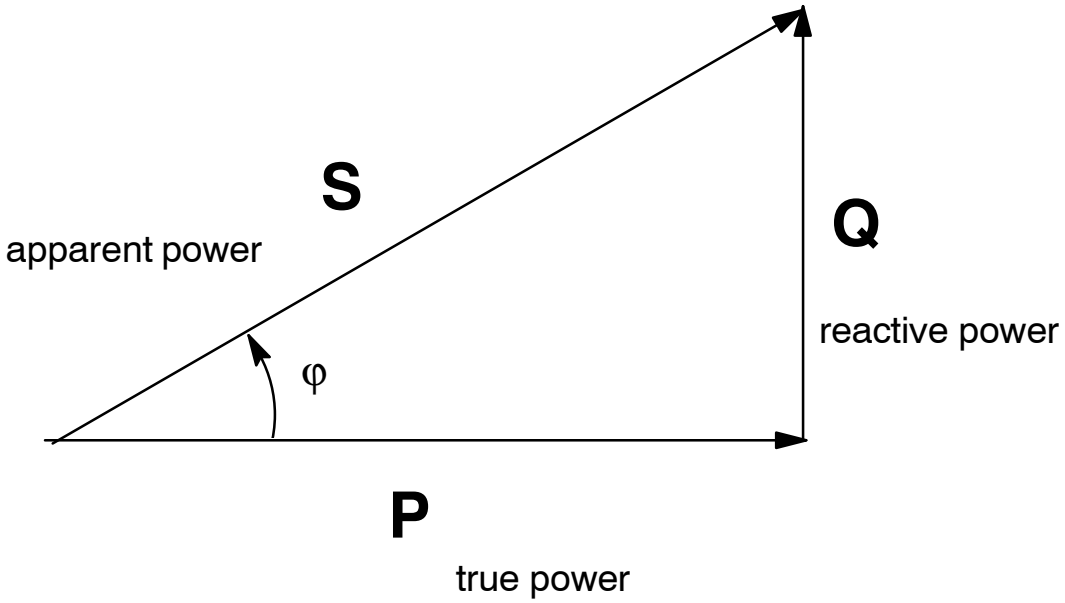

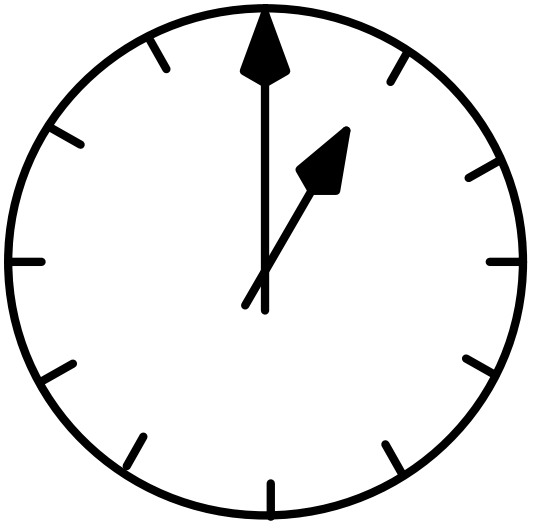

Chronometer

Figure 133 Work

FOR TRAINING PURPOSES ONLY!

© Lufthansa Technical Training

M3.16 FILTERS

GENERAL

Reactances

Impedances and apparent currents in composed AC circuits depend on the reactances. As these reactances themselves depend on the frequency, the impedances and apparent currents are determined by the frequency of the applied voltage.

$$X_L = 2\pi \times f \times L$$

$$X_C = \frac{1}{2\pi \times f \times C}$$

Neutralization

The phase shift of inductive devices and capacitive devices neutralize each other partially as we could see in the diagrams.

Here, a special case can occur. Inductive reactances and capacitive reactances can cancel out each other totally and therefore current and voltage can be in phase. The current is then only limited by the ohmic resistance of the connection.

Resonance

This special case only occurs at a certain frequency and is referred to as resonance (resonare = amplify, resound. lat.).

Symbol for Quantity

The symbol for the resonance frequency is f_{res} .

Formula

$$f_{res} = \frac{1}{2\pi \times \sqrt{L \times C}}$$

SERIES RESONANCE

General

A series resonant circuit consists of a coil and a capacitor connected in series.

As in a series connection the voltages are proportional to their reactances, the inductive reactive voltage must equal the capacitive reactive voltage as long as the reactances are the same, i.e. at resonance.

Conditions for resonances: $X_L = X_C$;
$U_L = U_C$

Example

A coil with an iron core and a capacitor have the same reactance at 50 Hz. They are connected in series and an AC voltage of 230 V at 50 Hz is applied.

Current, total voltage, voltage of the capacitor and voltage of the coil are all measured.

FOR TRAINING PURPOSES ONLY!

© Lufthansa Technical Training

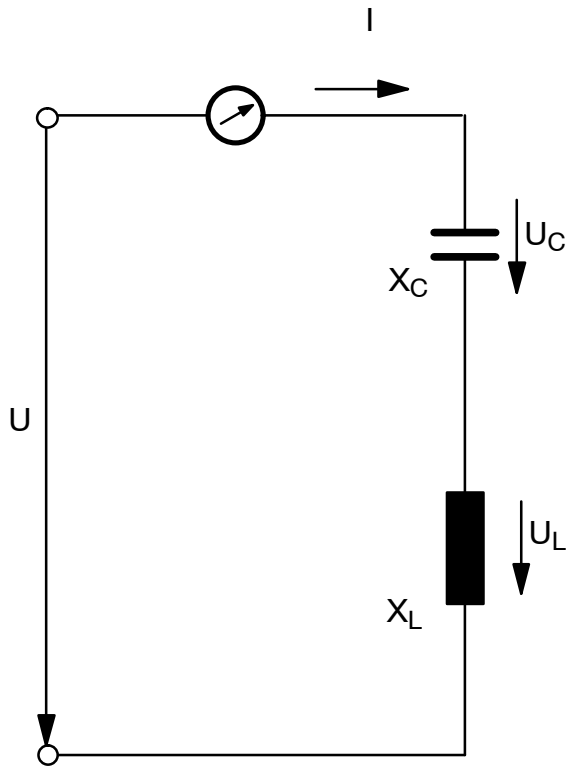

Figure 134 Series Resonance

FOR TRAINING PURPOSES ONLY!

© Lufthansa Technical Training

Voltage Triangle

The two voltages cancel each other out. As the result the series connection at resonance then only acts like a pure effective resistance. The impedance at resonance is equal to the effective resistance. The resultant resistance of the resonant circuit is called resonance resistance R_{res}.

$Z_{res} = R = R_{res}$

The phasor diagram also shows that the phase shift at resonance is zero.

$\varphi = 0°$

Voltage Superelevation

As the resistance is low at resonance, the current will increase, if the total voltage remains the same. According to this the inductive voltage drop

$U_L = I \times X_L$

and the capacitive voltage drop

$U_C = I \times X_C$

show maximum values. These voltages are, so to speak, amplified or superelevated when resonance occurs. Therefore this is designated as voltage superelevation or voltage resonance.

Damage of Devices

The voltage across the coil (also called choke) and the voltage across the capacitor are equal. Every individual voltage is significantly higher than the applied voltage.

The current is high.

The procedures in the circuit can be explained by a phasor diagram or by an impedance triangle. For this purpose, the equivalent circuit diagram of the series resonant circuit has to be applied. Beside the capacitive and inductive reactance the equivalent circuit diagram also includes the loss resistance R, which is represented by the effective resistance. The loss resistance is almost the same as the winding resistance of the coil.

At resonance the total resistance of the series resonant circuit is at its minimum and the current in the lead is at its maximum. Voltage superelevation (voltage resonance) occurs at coil and capacitor.

The voltage superelevation can cause an electric breakdown of the capacitor and the coil winding.

FOR TRAINING PURPOSES ONLY!

© Lufthansa Technical Training

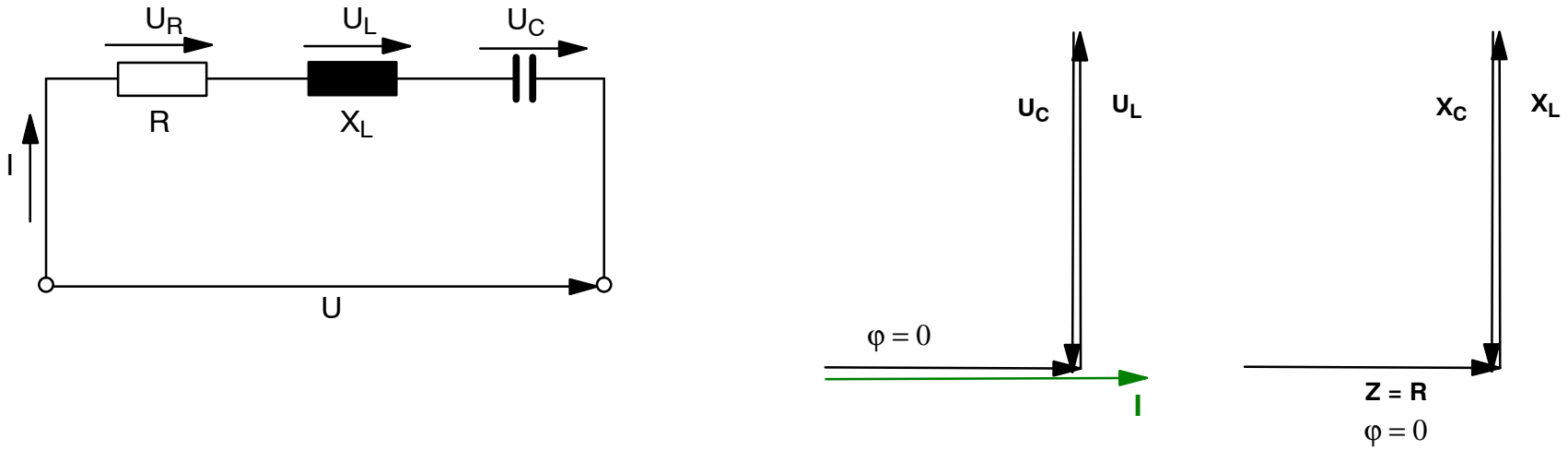

Figure 135 Series Resonance

FOR TRAINING PURPOSES ONLY!

© Lufthansa Technical Training

Example 1

A coil with the winding resistance of R = 20 Ω and the inductance of L = 0.5 H is series–connected with a capacitor. An AC voltage of U = 40 V, f = 1 kHz is applied. The connection is in resonance.

What is the:

1. capacitive reactance
2. current input
3. voltages

The frequency at which resonance occurs can be determined by applying the condition for series resonance.

$$X_L = X_C$$

Then you insert:

$$X_L = 2 \times \pi \times f \times L$$

$$X_C = \frac{1}{2\pi \times f \times C}$$

$$2 \times \pi \times f \times L = \frac{1}{2\pi \times f \times C}$$

Therefore, the resonant frequency is:

$$f_{res} = \frac{1}{2 \times \pi \times \sqrt{L \times C}}$$

The resonant frequency is expressed in Thomson's oscillation formula for series resonant circuits as well as for parallel resonant circuits.

Example 2

In a series connection with L = 0.02 H and C = 12.5 µF, resonance occurs at which frequency?

$$f_{res} = \frac{1}{2 \times \pi \times \sqrt{L \times C}} = \frac{1}{2 \times 3,14 \times \sqrt{0,02\ \text{H} \times 12,5 \times 10^{-6}\ \text{F}}} = 318\ \text{Hz}$$

FOR TRAINING PURPOSES ONLY!

© Lufthansa Technical Training

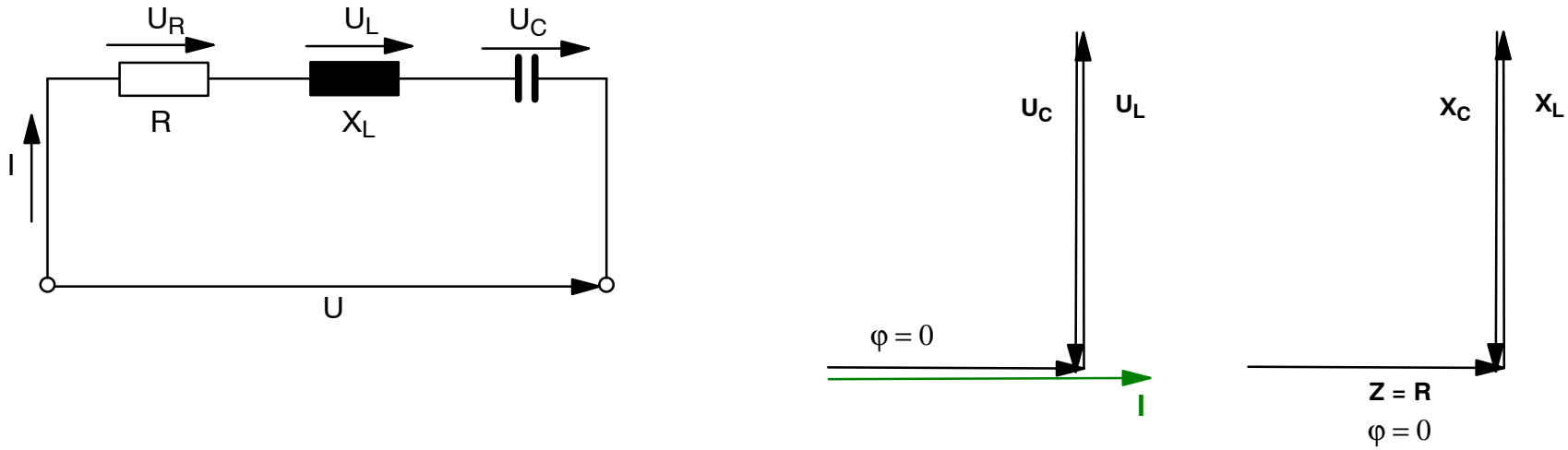

Figure 136 Series Resonance

FOR TRAINING PURPOSES ONLY!

© Lufthansa Technical Training

Diagram

Only at resonant frequency X_L is equal to X_C.

At frequencies below the resonant frequency $X_L = 2 \pi f L$ is lower than $X_C = 1 / (2 \pi f C)$ i.e. the capacitive reactance dominates. At frequencies above the resonant frequency X_L is higher than X_C and the inductive reactance dominates.

The graphical representation of impedance and current depending on the frequency gives the resonance curves. For the resonant frequency the series resonant circuit is, so to speak, a short circuit. If this circuit is connected in parallel to the load, the circuit keeps the resonant frequency away from the load.

Absorption Circuit

As the circuit absorbs this frequency, it is also called absorption circuit.

Impedance

The impedance is the total resistance of an electrical circuit. This can be a set of devices or a “black box“. The impedance depends on frequency.

FOR TRAINING PURPOSES ONLY!

© Lufthansa Technical Training

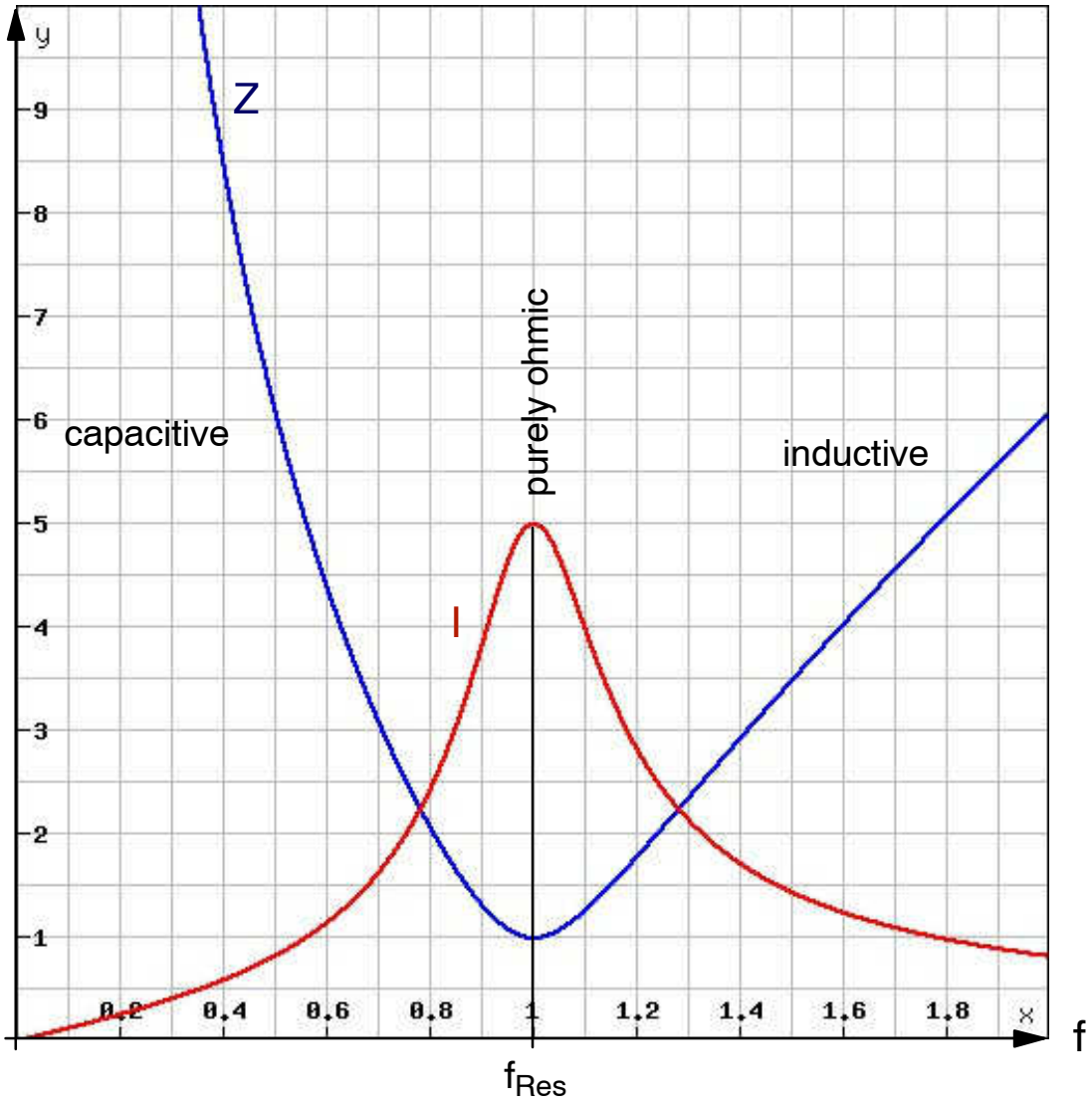

Figure 137 Series Resonant Circuit

FOR TRAINING PURPOSES ONLY!

© Lufthansa Technical Training

PARALLEL RESONANCE

General

The parallel resonant circuit consists of a coil and a capacitor in parallel connection.

The current in the coil and the current in the capacitor are equal.

Conditions for resonances: $X_L = X_C$;
$I_L = I_C$

Example

A coil with iron core and a capacitor have the same reactance at 50 Hz. They are connected in parallel and an AC voltage of 230 V at 50 Hz is applied.

Total voltage and individual voltages are measured.

FOR TRAINING PURPOSES ONLY!

© Lufthansa Technical Training

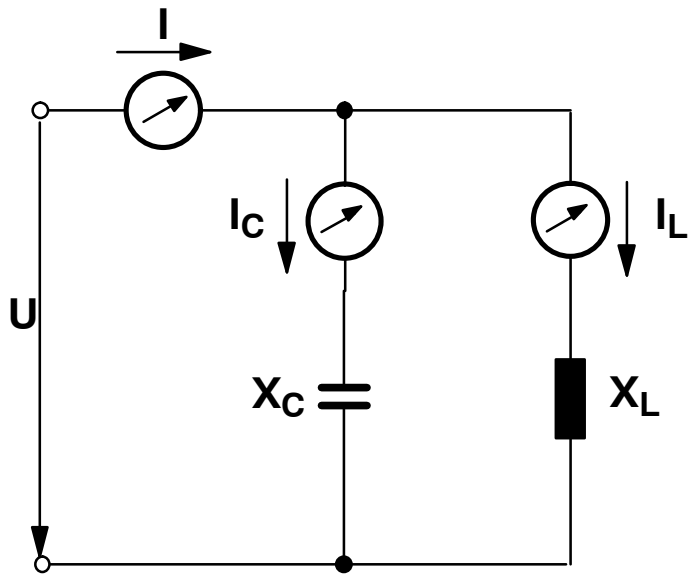

Figure 138 Parallel Resonance

FOR TRAINING PURPOSES ONLY!

© Lufthansa Technical Training

Current Triangle

Every individual current is significantly higher than the total current.

The procedures in the circuit can be explained by a phasor diagram or, to be more precise, by a current triangle.

Beside the capacitive and inductive reactance the equivalent circuit diagram also includes the loss resistance (effective resistance) R. The loss resistance is almost the same as the winding resistance of the coil.

As it is quite difficult to draw a phasor diagram for this equivalent circuit or to carry out calculations, usually a simplified equivalent circuit diagram is used.

If the reactances are equal (condition of resonance), the individual inductive and capacitive currents are equal at constant voltage U. The individual currents act in the exact opposite direction and therefore cancel each other.

This effective resistance is the resonance resistance as it is given in the equivalent circuit diagram.

Current Superelevation

The total current in the lead is lowest at resonance, because the reactive currents in the parallel resistances cancel each other out completely so that only a pure effective current remains.

That also means that at resonance the total resistance (resonance resistance) is highest, in fact significantly higher than the inductive or the capacitive parallel resistance. Therefore the current passing coil and capacitor is higher than the current passing the leads.

At resonance the total resistance of the parallel resonant circuit is maximum and the total current in the leads is minimum. A current superelevation (current resonance) occurs in coil and capacitor.

Phase Shift

Below the resonant frequency the connection is inductive, as the inductive resistance is lower and hence the inductive current is higher than the capacitive current.

Above the resonance frequency the capacitive current is higher.

At resonant frequency the circuit acts just as a purely ohmic load (effective resistance).

FOR TRAINING PURPOSES ONLY!

© Lufthansa Technical Training

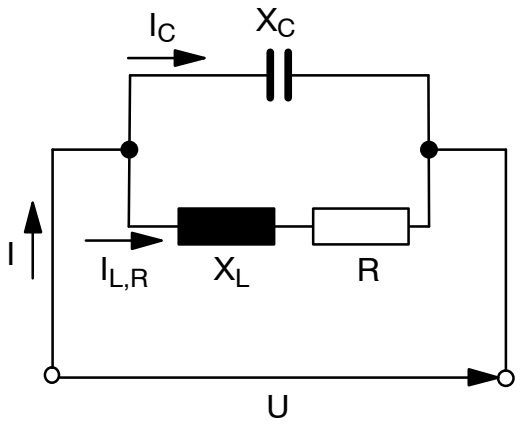

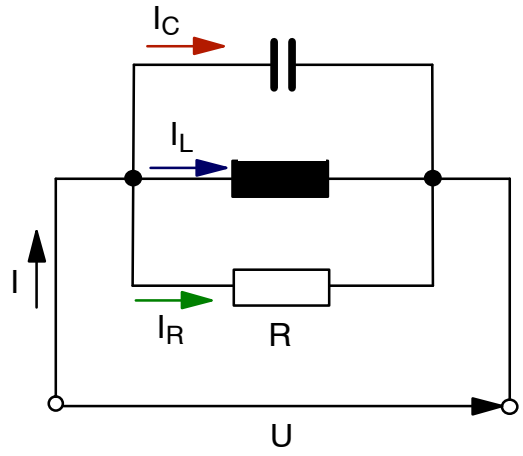

Simplified Diagram

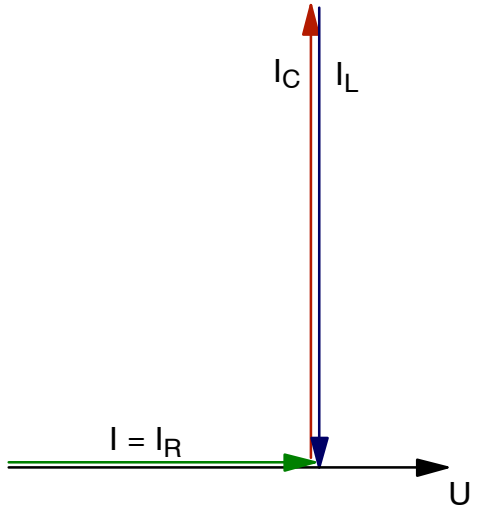

Figure 139 Parallel Resonance

FOR TRAINING PURPOSES ONLY!

© Lufthansa Technical Training

Diagram

The resonance curves have the same course as the impedance Z and the current I in the lead depending on the frequency.

The parallel resonant circuit is like an infinite resistance for the resonant frequency. If the parallel resonant circuit is series connected to a load, the resonant circuit will keep the resonant frequency away from the load.

Rejector Circuit

The parallel resonant circuit blocks the frequency and is therefore known as the rejector circuit.

The parallel resonant circuit can be used to remove a certain frequency (resonant frequency) out of many frequencies. This is done by short−circuiting all other frequencies except the resonant frequency.

FOR TRAINING PURPOSES ONLY!

© Lufthansa Technical Training

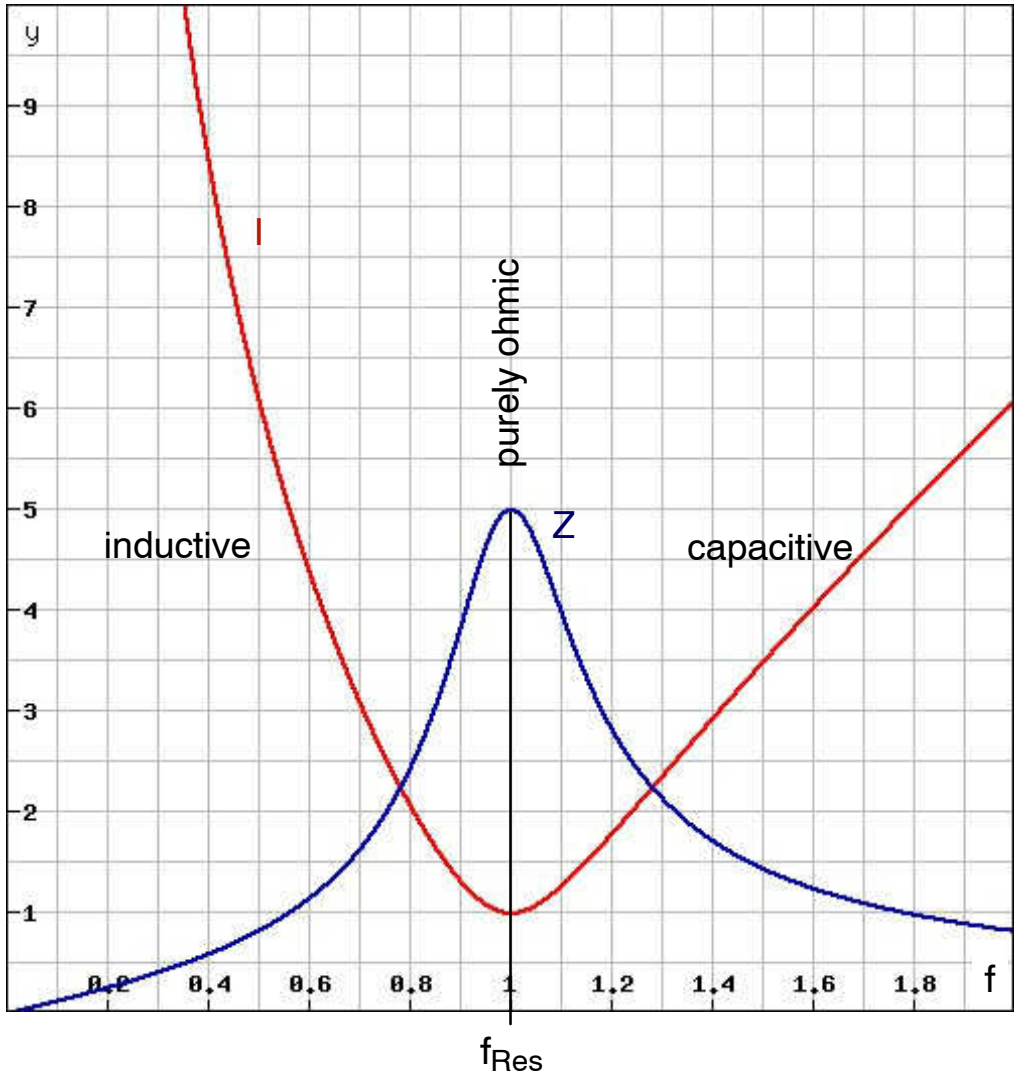

Figure 140 Impedance Curve at Parallel Resonance

FOR TRAINING PURPOSES ONLY!

© Lufthansa Technical Training

TWO–PORT NETWORKS

General

Looking at the effects of a component, or at a whole circuit rather than looking at the component itself, can sometimes simplify electrical engineering. The circuit is considered a ”black box” with unknown contents. Only the effect of the black box is regarded. Usually the circuit has an input port and an output port, i.e. four terminals. Therefore it is called two–port network.

Many different two–port networks are possible. Only two–port networks consisting of a capacitor and a resistor are considered below.

Filters

Filters suppress certain frequencies out of a frequency composition and let certain other frequencies pass undamped.

Filters are frequency dependent two–port networks that block certain frequencies and let other frequencies pass only slightly damped.

CR–filters are commonly used because of their compact design and their lower price.

LR–filters are very rarely used.

CR–Elements

In electronic circuits (e.g. amplifiers) AC voltage connections often have to be made between points with different DC voltage potentials. The following requirements apply to these connections:

- The AC voltage should be fully transmitted
- There must not be a DC across the connection

So called coupling capacitors meet these requirements. The capacitor and the series connected resistor together form a CR–element or RC–element. This combination is considered as a two–port network.

The frequency independent resistance of the series–connected capacitor results in a frequency dependent behavior of letting pass.

The frequency response is graphically represented by the dependency of the ratio of the output voltage to the frequency $U_{out} = f(f)$.

Example

If a RC / CR series connection is applied to AC voltage, the total voltage is divided between resistor and capacitor. This division is done proportional to the resistances. The value of the effective resistance does not depend on the frequency, whereas the resistance of the capacitor depends on the frequency.

Hence the resistance ratio of C and R and the resulting voltage ratio are also dependent on the frequency.

FOR TRAINING PURPOSES ONLY!

© Lufthansa Technical Training

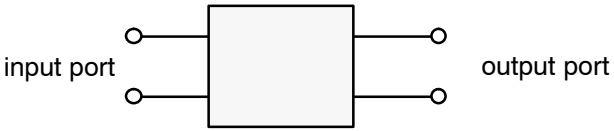

Two-Port Network

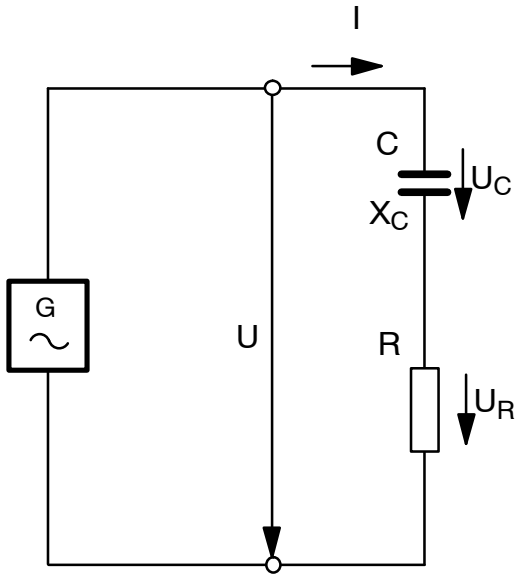

Filter Circuit

Figure 141 Filter

FOR TRAINING PURPOSES ONLY!

© Lufthansa Technical Training

PASS FILTERS

General

Here we have two-port networks which consist of capacitors and resistors.

High – Pass Filters

The CR–element is referred to as high pass filter because it lets voltages with high frequencies easily pass.

FOR TRAINING PURPOSES ONLY!

© Lufthansa Technical Training

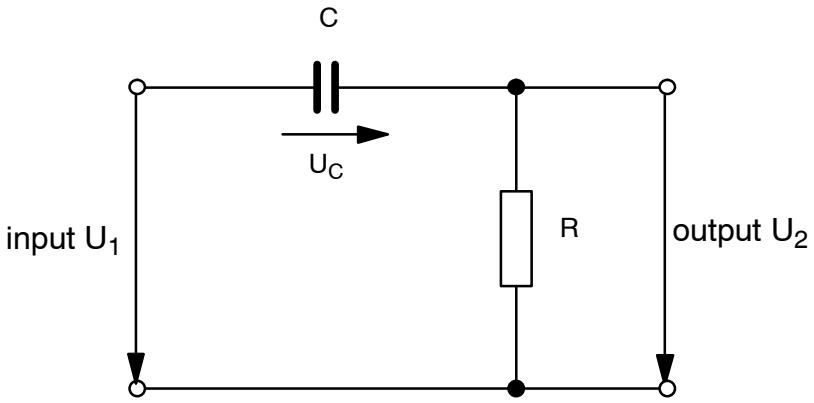

CR-Element

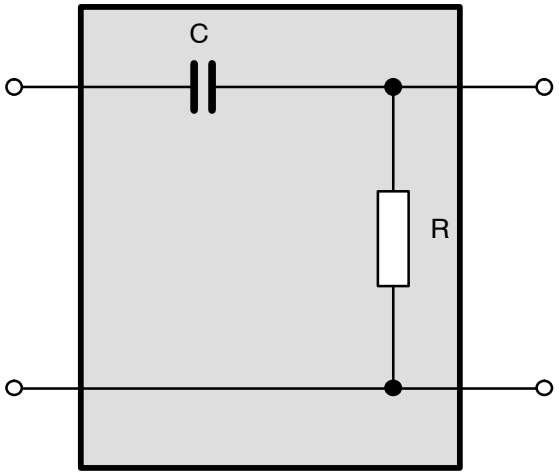

“Black Box“

Figure 142 High-Pass Filter

FOR TRAINING PURPOSES ONLY!

© Lufthansa Technical Training

Low – Pass Filters

At low frequencies the resistance of the capacitor is very high. A very large part of the voltage will drop across the capacitor.

The RC element lets low frequencies pass and heavily damps high frequencies. Because the low frequencies can pass, this circuit is called a low–pass filter.

Cut – Off Frequency

It was agreed that the cut off frequency is the frequency at which the ratio of output voltage and input voltage is 0.7

$$0.7 = \frac{1}{\sqrt{2}}, \quad \frac{U_2}{U_1} = \frac{1}{\sqrt{2}}$$

The cut–off frequency f_c represents a clearly defined border, from which the high – pass filter gets largely transparent.

$$F_c = \frac{1}{2 \times \pi \times R \times C}$$

FOR TRAINING PURPOSES ONLY!

© Lufthansa Technical Training

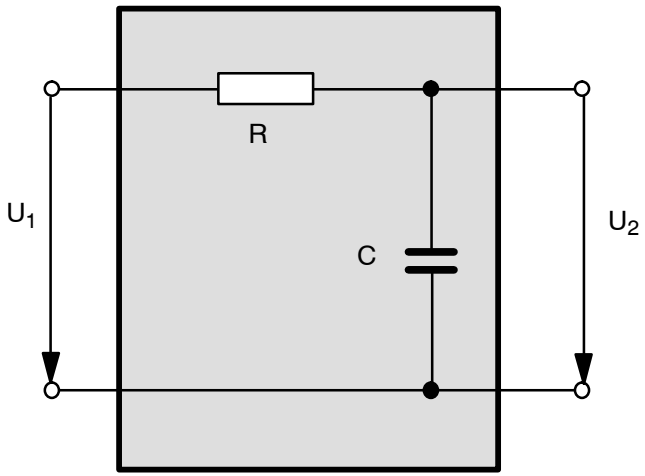

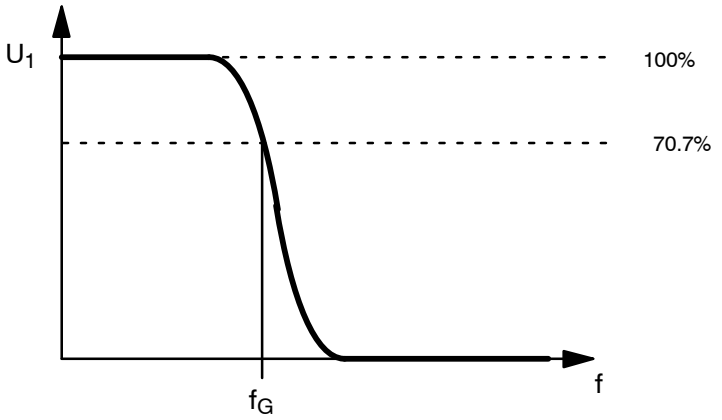

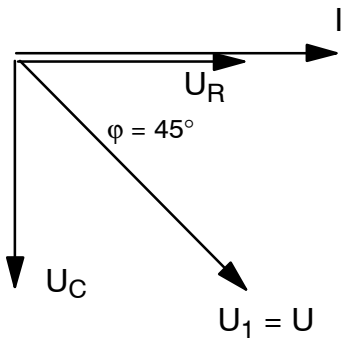

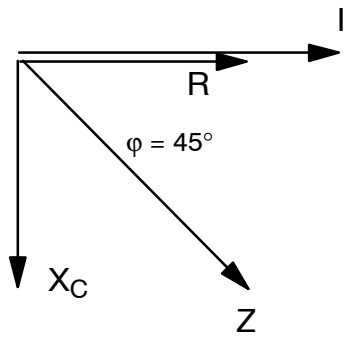

Phasor diagram of the voltages and the resistances of a RC–element used for the cut–off frequency

Figure 143 Low-Pass Filter

FOR TRAINING PURPOSES ONLY!

© Lufthansa Technical Training

Application

In the rectifier there are superimposed currents. Smoothing circuits (RC low−pass filters) are designed to cancel out the unintended AC parts of the superimposed current as much as possible.

The aim is to have DC voltage without parts of AC. The residual ripple is referred to as ripple voltage. It should be as low as possible.

The residual ripple can be calculated from the sieving factor (grading factor).

$$S = \frac{R_S}{X_{CS}}$$

$$S_{GES} = S_1 \times S_2 \times S_3 .....$$

FOR TRAINING PURPOSES ONLY!

© Lufthansa Technical Training

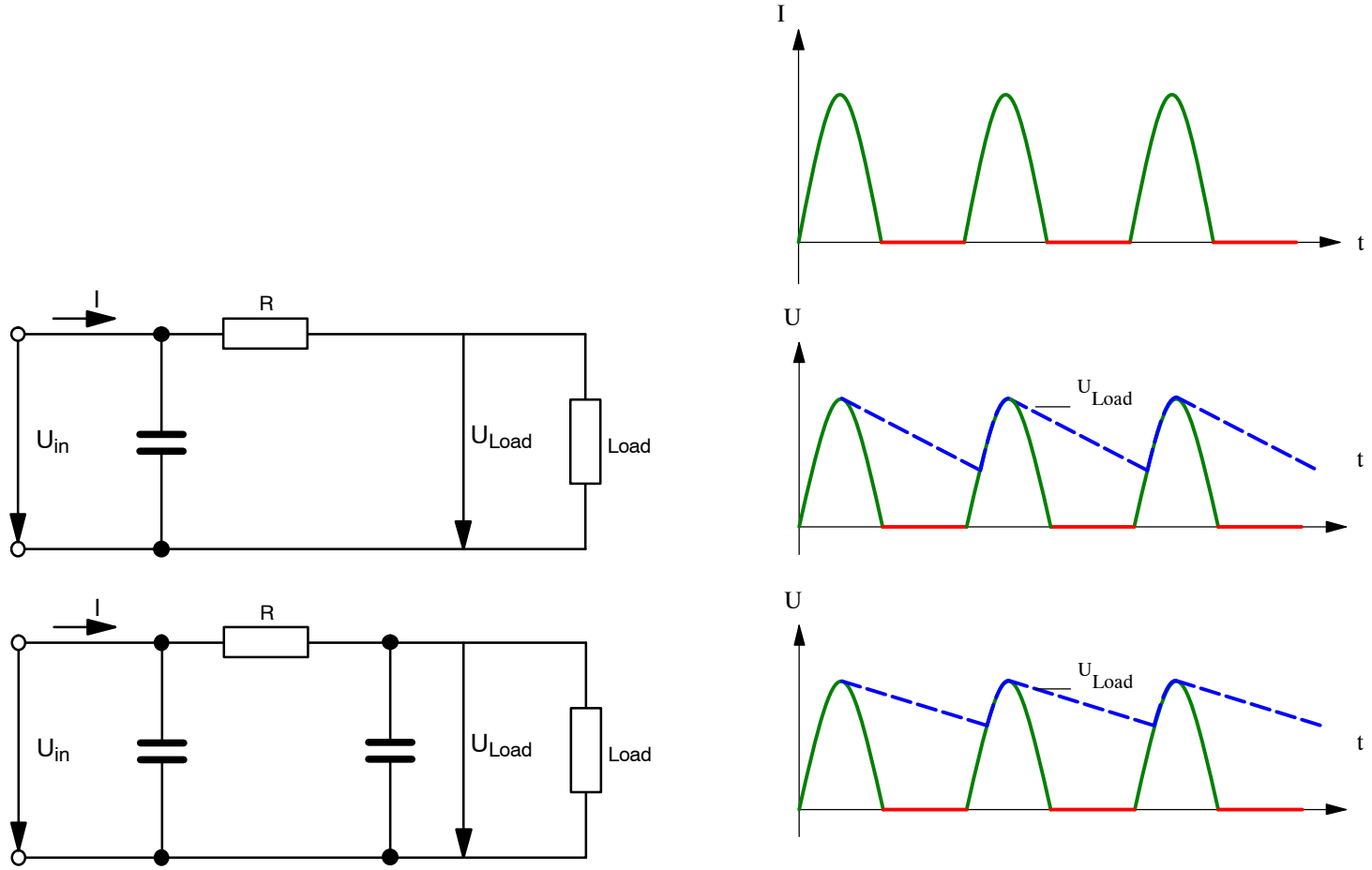

Figure 144 Sieving

FOR TRAINING PURPOSES ONLY!

© Lufthansa Technical Training

BAND-PASS FILTER AND BAND-STOP FILTER

General

There are four different groups of filters:

- Low–pass filters (LPF) let low frequencies including DC voltages pass, but block frequencies that are higher than the cut–off frequency.
- High–pass filters (HPF) let high frequencies pass, but block frequencies that are lower than the cut–off frequency, including DC.
- Band–pass filters (BPF) only let frequencies of a particular frequency band (channel) pass. They have an upper and a lower cut–off frequency.
- Band–stop filters (BSF) let all frequencies pass, apart from a particular frequency band (channel). For this band the damping shall be as high as possible. Band stops also have an upper and a lower cut–off frequency.

The series connection of a high–pass filter and a low–pass filter is a band–pass filter.

The parallel connection of a high–pass filter and a low–pass filter is a band–stop filter.

Band–Pass Filter

The schematic below shows simple high–pass, low–pass and band–pass circuits built from RC combinations.

If the cut–off frequency of the low–pass filter is higher than that of the high–pass filter, a band–pass filter has to be established. The band–pass filter consists of a high–pass filter and a low–pass filter, which are series connected.

If coils are used instead of resistors, the losses, and therefore the damping in the pass–band, may be very small. The filter flanks become considerably steeper.

Examples

The figure shows a simple RC-combinations which work as HPF, LPF and BPF.

FOR TRAINING PURPOSES ONLY!

© Lufthansa Technical Training

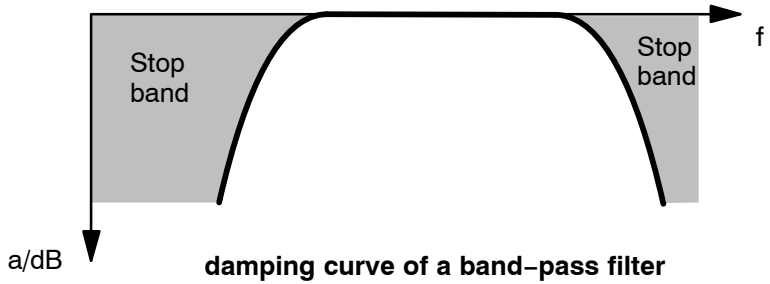

damping curve of a band–pass filter

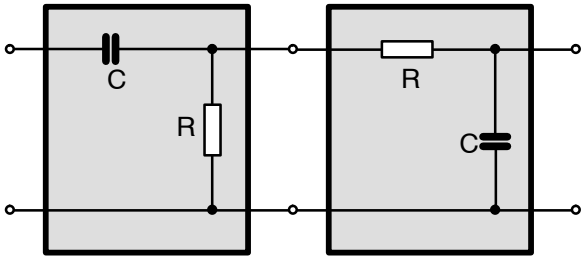

Band-Pass Filter

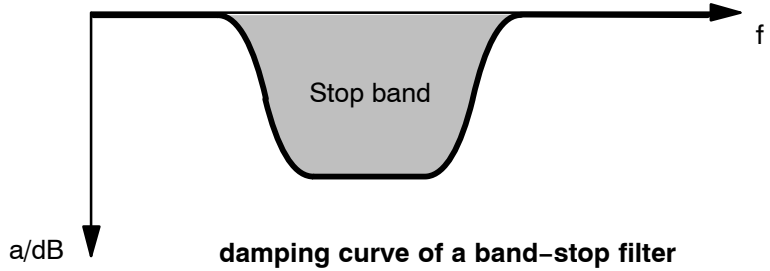

damping curve of a band–stop filter

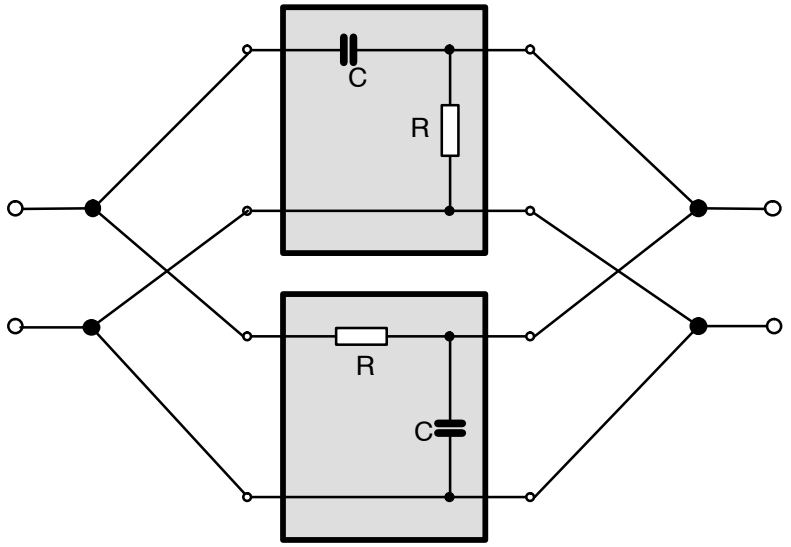

Band-Stop Filter

Figure 145 Band-Pass and Band-Stop

FOR TRAINING PURPOSES ONLY!

© Lufthansa Technical Training

M3.15 TRANSFORMERS

CONSTRUCTION AND MODE OF OPERATION

Construction

Generally, a transformer consists of two coils and an iron core (figure).

The input coil is also called primary winding or the high–voltage winding. The output coil, also called secondary coil or low–voltage winding. The core is composed of isolated thin iron layers (laminated core) in order to suppress eddy currents (unintended heating of the iron core).

Transformers can step up or step down voltages, currents and resistances.

Turns Ratio

The number of windings of the input coil is named N_1.

The number of windings of the output coil is named N_2.

The turns ratio is calculated with this formula: $\frac{N_1}{N_2}$.

Operation

On applying an AC voltage (U_1) to an input coil (primary side) N_1, an input AC I_1 flows. I_1 establishes a changing magnetic field in the iron core. This field has a magnetic flux ϕ (Phi). This magnetic flux is moved through the iron core to the output coil (secondary side). The periodic flux changes result in an induced voltage (output voltage) in the output coil, i.e. an AC voltage with the same frequency as the input voltage.

As the input energy is transferred to the output via magnetic fields and the iron core has a limit in magnetic „conductivity“ the size of a transformer mainly depends on the amount of power to be transformed.

Transformer Design

The size of the transformer mainly depends on the power to be transferred.

Polarity Marking

In schematics there may be dots at one side of the windings to indicate same/opposite winding direction which will give the polarity (same/opposite) of the input/output windings.

FOR TRAINING PURPOSES ONLY!

© Lufthansa Technical Training

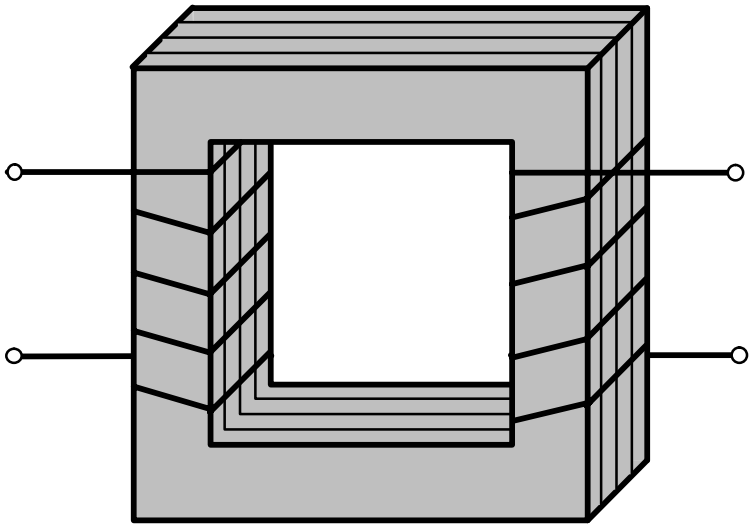

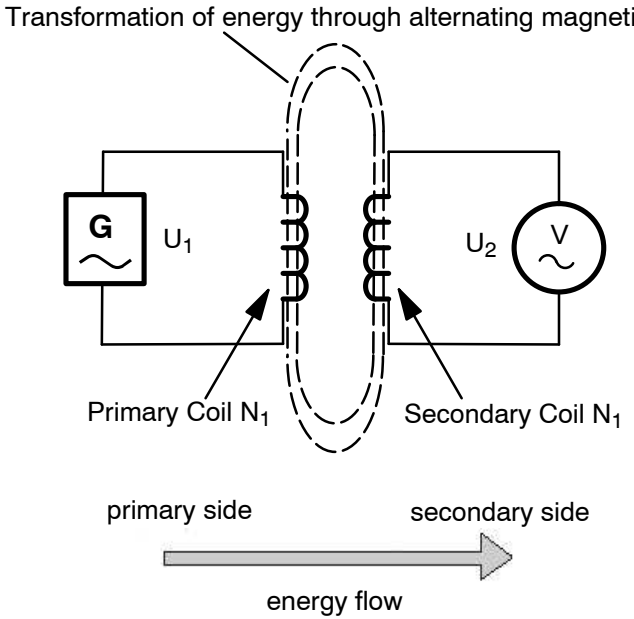

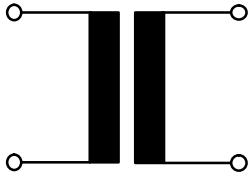

Wiring Symbol

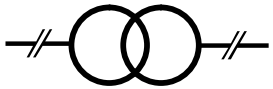

Simplified Wiring Symbol

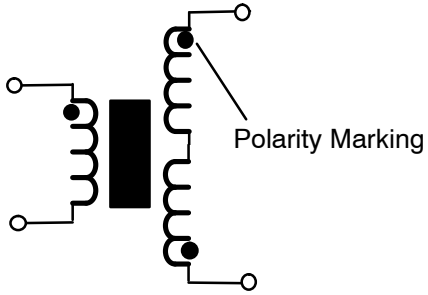

Figure 146 Transformer Principle

FOR TRAINING PURPOSES ONLY!

© Lufthansa Technical Training

SHAPES OF TRANSFORMERS

General

Depending on the form of the iron core there are core-form transformers and shell-form transformers.

Core-Form Transformers

In core form transformers the coils are wound around opposite sides of a rectangular iron core.

This kind of transformer is mainly used for technical devices.

Shell-Form Transformers

In shell-form transformers both coils are located around the same part of an iron core.

The iron core offers two rectangular leads for the magnetic flux.

They are used mainly for high voltage devices.

Toroidal-Form Transformers

Toroidal Transformers overcome some of the disadvantages of other transformers.

As the shell-form core is made from an E shape and an I shape iron piece gaps between the iron parts are inevitable.

The toroidal is one single piece of iron with no air gaps. Also magnetic flux has problems following the 90 degrees angle at the corners of other transformers causing loss of magnetic flux. The constant curve of the toroidal avoids such losses.

The efficiency is higher than on other transformers but production is more costly.

FOR TRAINING PURPOSES ONLY!

© Lufthansa Technical Training

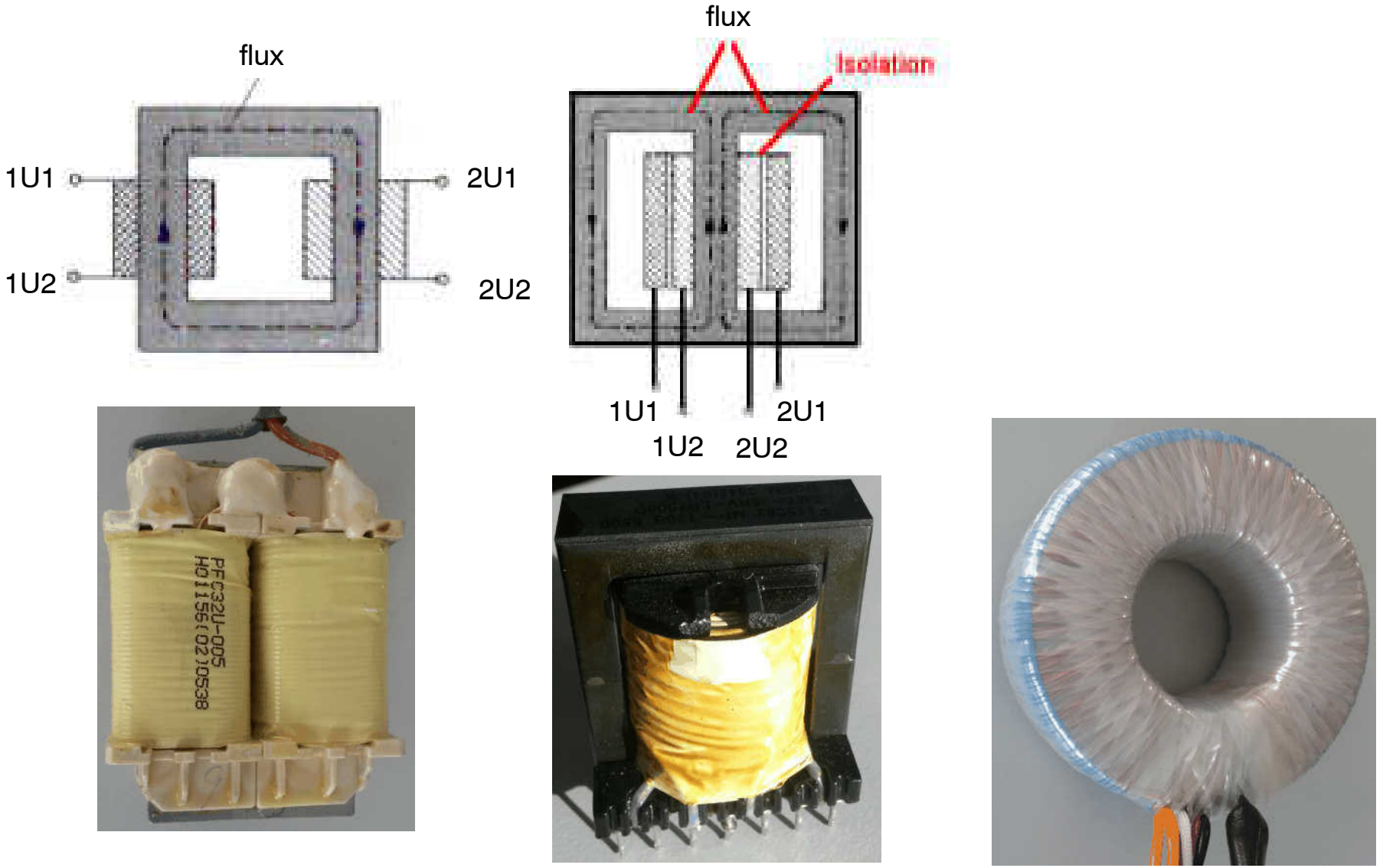

Figure 147 Shapes of Transformers

FOR TRAINING PURPOSES ONLY!

© Lufthansa Technical Training

LOAD CONDITIONS

No-Load Condition

The no-load voltage is the voltage of the secondary coil if no load is connected. Then the secondary side has an open circuit.

In the primary coil the input voltage and the self-induced voltage neutralize each other nearly completely. By this, the current in the primary coil is very small.

Example

A transformer has an input voltage of 230 V AC.

The self-induced voltage in the primary coil is 228.5 V. It opposes the input voltage.

In the primary coil, the resistance of the windings is 2,5 Ω.

- a) What is the no-load current of the transformer?
- b) What is the current without self-induced voltage? This will happen when the voltage is a DC voltage.

a) $I_1 = \frac{U_{tot}}{R_{tot}} = \frac{U_1 - U_Q}{R_{winding}} = \frac{230\,V - 228,5\,V}{2,5\,\Omega} = 0.6\,A$

b) $I_1 = \frac{U_1}{R_1} = \frac{230\,V}{2,5\,\Omega} = 92\,A$

Experiment

A transformer is operated. The data are known from the example.

We compare the input voltage U_1 and the output voltage U_2.

The transformer is operated in no-load condition.

Output voltage U_2 = 300 V

with the relation $\frac{U_1}{U_2} = \frac{150}{300} = \frac{1}{2}$

and the relation $\frac{N_1}{N_2} = \frac{300}{600} = \frac{1}{2}$

we find out that $\frac{U_1}{U_2} = \frac{N_1}{N_2}$

FOR TRAINING PURPOSES ONLY!

© Lufthansa Technical Training

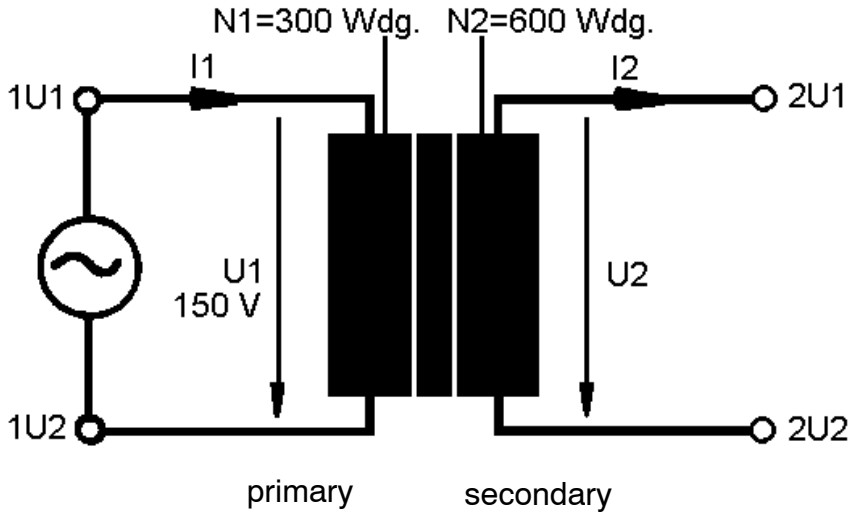

Figure 148 Transformer

FOR TRAINING PURPOSES ONLY!

© Lufthansa Technical Training

Load Condition

If a load is connected to the secondary coil of the transformer, the circuit is closed and there is a current. This is the secondary current.

This current causes a magnetic field. According to Lenz's rule this field will oppose the cause for the induction and therefore it will weaken the flux of the primary coil.

The self-induced voltage of the primary coil decreases.

As a result the input voltage is opposed by a smaller self-induced voltage.

Finally, the primary current increases. The higher the load on the secondary side, the higher the primary current.

FOR TRAINING PURPOSES ONLY!

© Lufthansa Technical Training

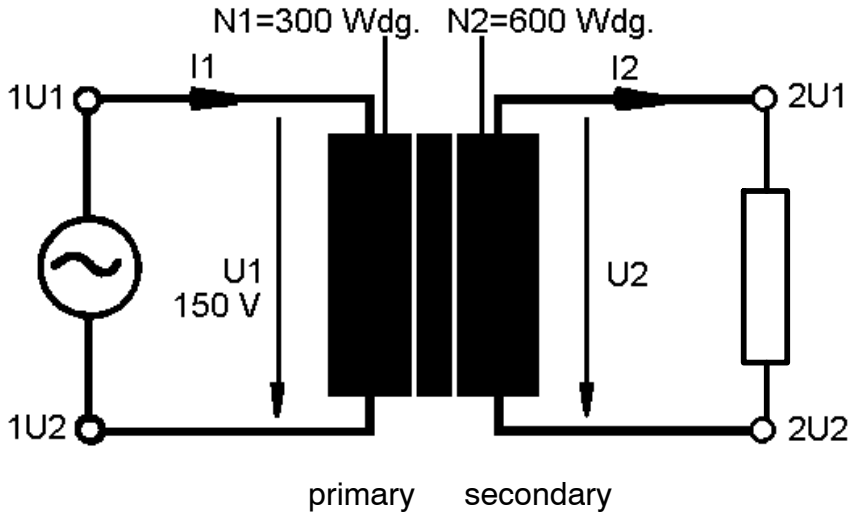

Figure 149 Transformer

FOR TRAINING PURPOSES ONLY!

© Lufthansa Technical Training

TRANSFORMATION RATIO

Voltage Transformation

As you already know, the effective length of the conductor is decisive for the induced voltage in the coil. For the transformer, that means that the output voltage depends on the number of turns.

The output voltage can be calculated using the following formula:

$$\frac{U_1}{U_2} = \frac{N_1}{N_2}$$

Example

An AC transformer converts a voltage of 230 V to 24 V. The secondary coil has 100 turns.

How many turns must the primary winding have?

U_1 primary voltage

U_2 secondary voltage

N_1 number of turns of primary coil

N_2 number of turns of secondary coil

$$\frac{N_1}{N_2} = \frac{U_1}{U_2} \Rightarrow N_1 = \frac{U_1 \times N_2}{U_2} = \frac{230\ V \times 100}{24\ V} = 958\ \text{turns}$$

Current Transformation

It was assumed that the power output of the transformer is equivalent to the power input: Pin = Pout.

According to power formula, the current must now be higher at decreasing voltage so that the same power is converted. If the output voltage is double the input voltage, then the input current must be double the output current so that the ratio is maintained.

Example

The secondary winding of a transformer with 60 turns consumes a current of 20 A.

How many amperes consumes a primary winding with 1000 turns?

$$\frac{I_2}{I_1} = \frac{N_1}{N_2} \Rightarrow I_1 = \frac{N_2 \times I_2}{N_1} = 1,2\ A$$

Transformation of Resistances

In the field of communications engineering the transformer is often used to match resistances. The highest power is transmitted, if the internal resistance of the generator is the same as that of the load. If the resistances of the generator and the load differ, the transformer is connected as a transmitter in order to match both resistances.

By Ohm's Law the transformation of resistance is expressed by the formula:

$$\frac{R_1}{R_2} = \frac{N_1^2}{N_2^2} = t_r^2$$

R_1 = resistance of the primary side

R_2 = resistance of the secondary side

N_1 = number of turns of the primary side

N_2 = number of turns of the secondary side

t_r = transformation ratio

FOR TRAINING PURPOSES ONLY!

© Lufthansa Technical Training

THIS PAGE INTENTIONALLY LEFT BLANK

FOR TRAINING PURPOSES ONLY!

© Lufthansa Technical Training

LOSSES

Loss and Efficiency

The efficiency is the ratio of power output to power input. The applied effective power of the transformer is by the **iron losses L_{FE}** and by the **copper losses L_{CU}** higher than the delivered effective power.

The losses of a transformer are:

- copper losses L_{CU}
- iron losses L_{FE}

Copper losses occur in the windings. They are caused by the heat produced by the current flow. Copper losses are load–dependent because different currents flow through the windings depending on the load of the transformer.

Iron losses in the iron core are caused by magnetic reversal and eddy currents. Iron losses are not dependent on the load.

Efficiency

The efficiency η (eta) of small transformers is 88 – 92 %.

Measuring

Iron losses are measured with an open–circuit test.

Copper losses are measured with a short–circuit test.

Example

The transformer of 1 kVA has an iron loss of 5 % and a copper loss of 8 %.

What is the total loss and what is the resultant efficiency of the transformer?

$$\eta = \frac{P_{out}}{P_{out} + L_{Fe} + L_{Cu}}$$

Overcoming Transformer Losses

The changing magnetic field from the primary winding doesn't only create induction in the secondary winding but also in the iron core. In this case eddy currents arise warming up the iron core. The heat produced is energy lost. The only way to avoid such losses is to form the iron core from sheet metal instead of one piece of metal.

These sheet metals are called lamination's. They are made from material that is very easy to magnetize and demagnetize to reduce losses from Hysteresis. The lamination's must be insulated from each other to prevent the eddy currents. This is usually done by a non-conductive paint that is applied to every lamination.

Finally these lamination's are stacked to form the transformers iron core.

The thinner these lamination's are the better eddy currents can be avoided but make construction more costly.

Overcoming copper losses is far more complex. Instead of one wire with a large diameter stranded wires are used. This reduces the Skin effect due to a larger surface. Though the Skin effect mainly is a high-frequency problem also transformers connected to the mains may have such windings as some minor losses due to Skin effects can occur.

Cooling the transformer would also help to reduce copper losses as copper increases its resistance with the temperature increasing.

FOR TRAINING PURPOSES ONLY!

© Lufthansa Technical Training

,

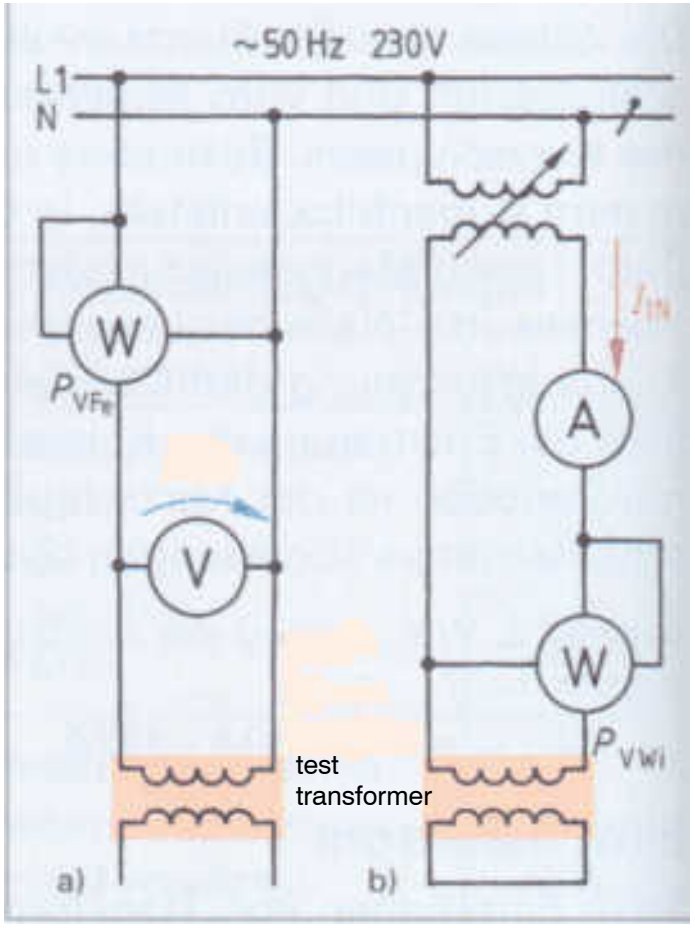

Figure 150 Transformer Losses

FOR TRAINING PURPOSES ONLY!

© Lufthansa Technical Training

POWER TRANSFER

General

The nominal power output of a transformer is the apparent power.

The reason is the the type of load. It can be a capacitive load, an inductive load or a ohmic load.

The apparent load is calculated $S^2 = P^2 + Q_C^2$ or $S^2 = P^2 + Q_L^2$. It can be much higher than the nominal load of the transformer.

Consequently, the transformer has a higher current and a higher power dissipation with heat development. This will result in damage.

The transformer must be designed for the enduring stress off the full nominal power output.

Transformers with a primary coil and a secondary coil transfer power via the magnetic field.

Output Voltage

A transformer is supplied with input power. If the output is measured in no-load condition and in load condition with increasing output current there are different results depending on the type of load.

The different types of load are

- ohmic resistor
- inductive resistor
- capacitive resistor.

When the inductive load increases the output voltage will decrease.

When the capacitive load increases the output voltage will increase.

Primary Power

The primary power of a transformer is calculated with this formula:

$$P_p = U_1 \times I_1$$

Secondary Power

The secondary power of a transformer is calculated with this formula:

$$P_s = U_2 \times I_2$$

Example

A transformer is used to supply four motors.

Each motor gives a power of 5 kW.

The power factor of the motors is 0.8.

What is the minimum nominal power output of the transformer?

$P_{tot} = 5\ \text{kW} \times 4 = 20\ \text{kW}$

$P = S \times \cos \varphi$

$$S = \frac{P}{\cos \varphi} = \frac{20\ \text{kW}}{0,8} = 25\ \text{kVA}$$

FOR TRAINING PURPOSES ONLY!

© Lufthansa Technical Training

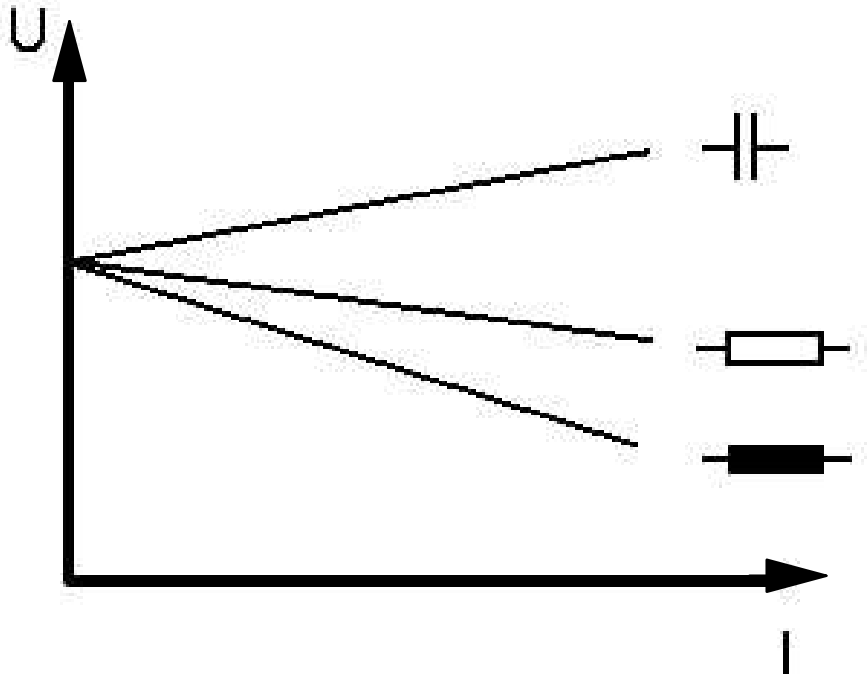

Figure 151 R, C, L - Load of a Transformer

FOR TRAINING PURPOSES ONLY!

© Lufthansa Technical Training

SHORT CIRCUIT VOLTAGE

General

The short circuit voltage of a transformer is a reference for the change of the output voltage when the load increases. It is also a reference for the internal resistance of the transformer.

A low short circuit voltage means that the internal resistance is low. With a high load the output voltage will decrease only slightly.

Measuring

The short circuit voltage is measured with a variable voltage source connected to the primary coil. The secondary coil is short-circuited.

The current in the secondary circuit is measured.

Starting with zero, the input voltage is increased until the secondary current is the nominal current. This voltage at the primary coil is named short circuit voltage.

Fixing of the Short Circuit Voltage

The short circuit voltage is fixed by the construction of the transformer. The windings can be in a different order and the iron core can have a different construction with additional ways for the flux.

FOR TRAINING PURPOSES ONLY!

© Lufthansa Technical Training

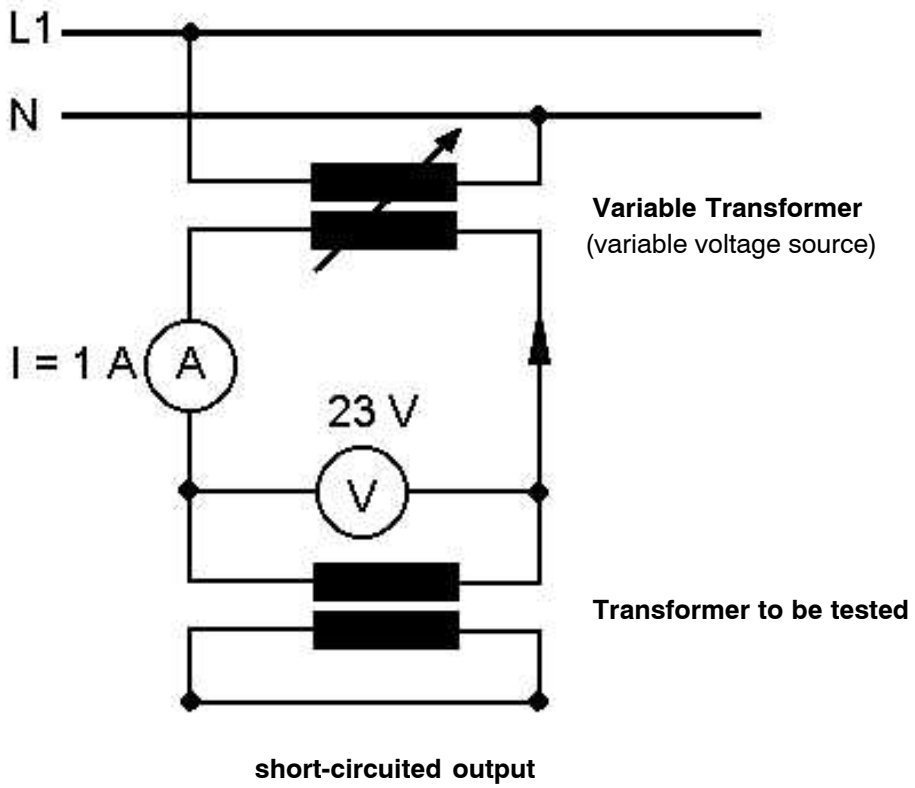

Figure 152 Short Circuit Voltage

FOR TRAINING PURPOSES ONLY!

© Lufthansa Technical Training

AUTO–TRANSFORMERS

General

An auto–transformer has only one coil for both input and output side. Primary and secondary sides share a part of the windings.

With an auto-transformer, voltages can be stepped up and stepped down.

The auto–transformer is not an inductive voltage divider but a proper transformer. As derived from conventional transformers all laws apply.

Advantages

The major advantage of the auto–transformer is its small design with respect to a conventional transformer with two windings. With a transformer with two windings the total power must be transmitted from the one winding through the magnetic flux to the other winding.

Power

Transformers can be distinguished by:

- rated power P_r
- throughput rating P_t

Regarding a transformer with separated windings the throughput rating is equal to the rated power.

Regarding an auto–transformer part of the output current can be tapped by the wire of the input coil. Thus only a part of the power must be transmitted through the magnetic flux of the iron core. This total power output is called throughput rating Pt. The power transmitted by induction is called rated power Pr.

$$P_r < P_t$$

$$P_t = U_1 \times I_1 = U_2 \times I_2 \quad \text{at } U_1 > U_2$$

$$P_r = U_2 \times (I_2 - I_1)$$

FOR TRAINING PURPOSES ONLY!

© Lufthansa Technical Training



Simplified Wiring Symbol

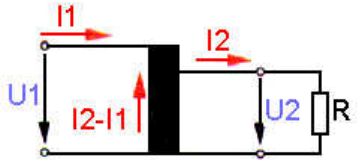

stepping down

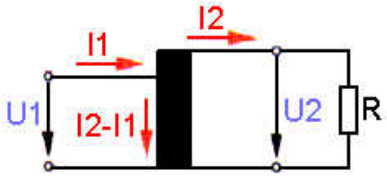

stepping up

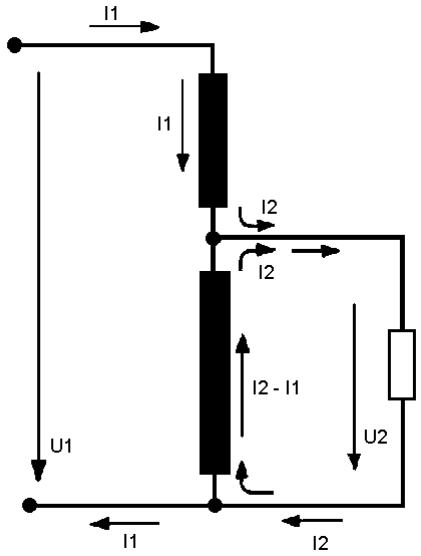

Currents

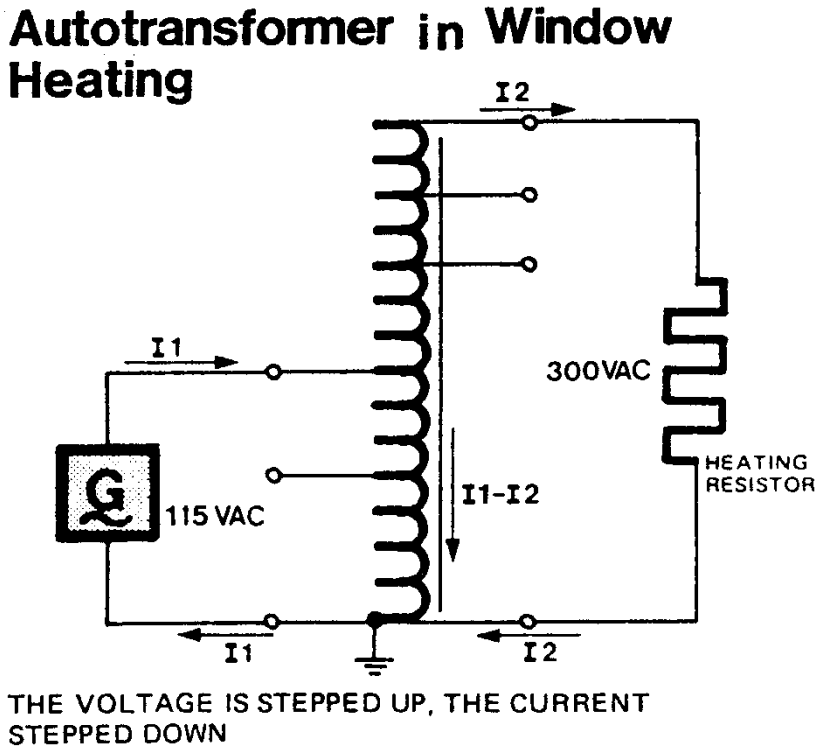

Figure 153 Symbol and Application of Autotransformers

FOR TRAINING PURPOSES ONLY!

© Lufthansa Technical Training

CURRENT TRANSFORMERS

General

Current transformers (CT's) are special transformers which allow the measurement of AC currents without breaking the current–carrying leads.

Excess Voltage

Current transformers must always have a load (ammeter). Otherwise a voltage of > 100,000 V would be applied, if the terminals are open.

The connector for the measuring circuit must not be removed if there is current in the current-carrying lead.

FOR TRAINING PURPOSES ONLY!

© Lufthansa Technical Training

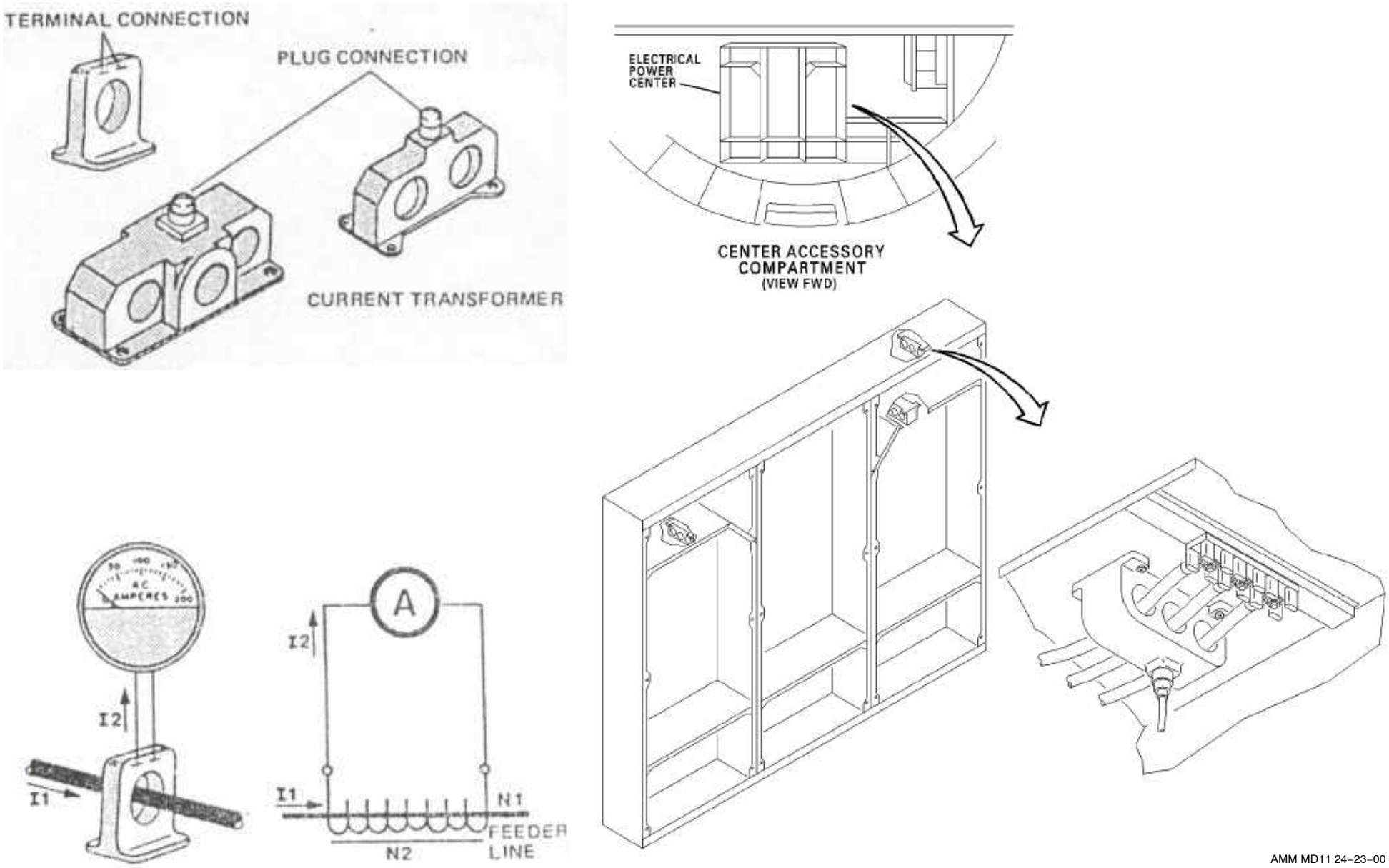

AMM MD11 24-23-00

Figure 154 Current Transformer

FOR TRAINING PURPOSES ONLY!

© Lufthansa Technical Training

Current Transformers under No Load Conditions

Here I will use the Current Transformer to explain load and no-load conditions.

Under no-load conditions a transformer, like any power source, will have its maximum output voltage as no load current will flow. So the internal resistance of the source will have no influence on the voltage provided.

In case of a current transformer that output voltage will be very high due to the ratio of turns.

The losses in this case are mainly iron losses as the minimum input current will flow only causing minimum copper losses.

Current Transformers under load conditions

If an indicator is connected to a current transformer the maximum current will flow on the secondary side. This current will cause copper losses in the secondary winding reducing the output voltage, in this case nearly Zero as the transformer will be close to short-circuit conditions.

The current in the secondary winding will cause the current in the primary winding to increase as input and output power must be equal (disregarding losses).

So the higher current in the primary winding will increase the copper losses in the primary windings as well as the iron losses as more energy (magnetic field) has to be transferred.

FOR TRAINING PURPOSES ONLY!

© Lufthansa Technical Training

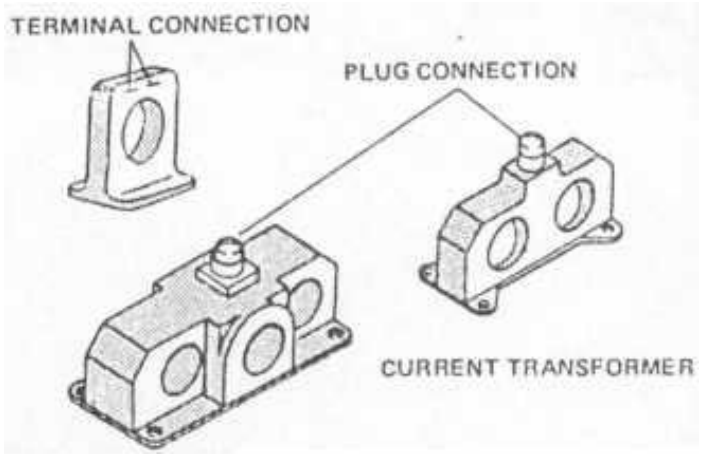

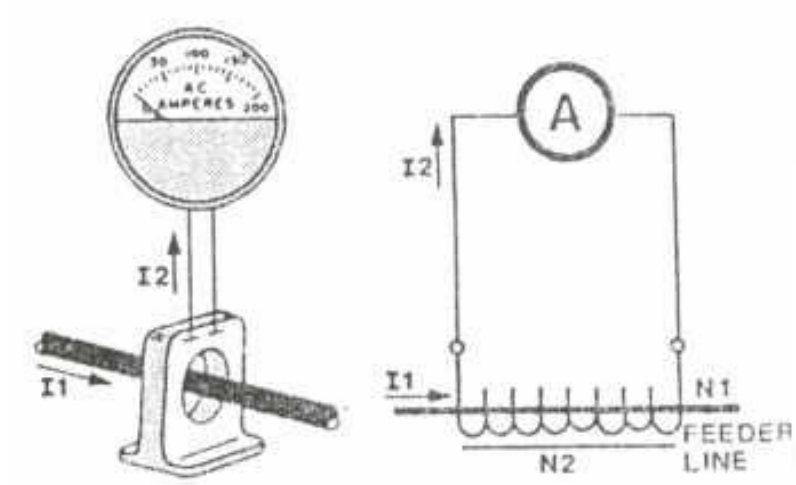

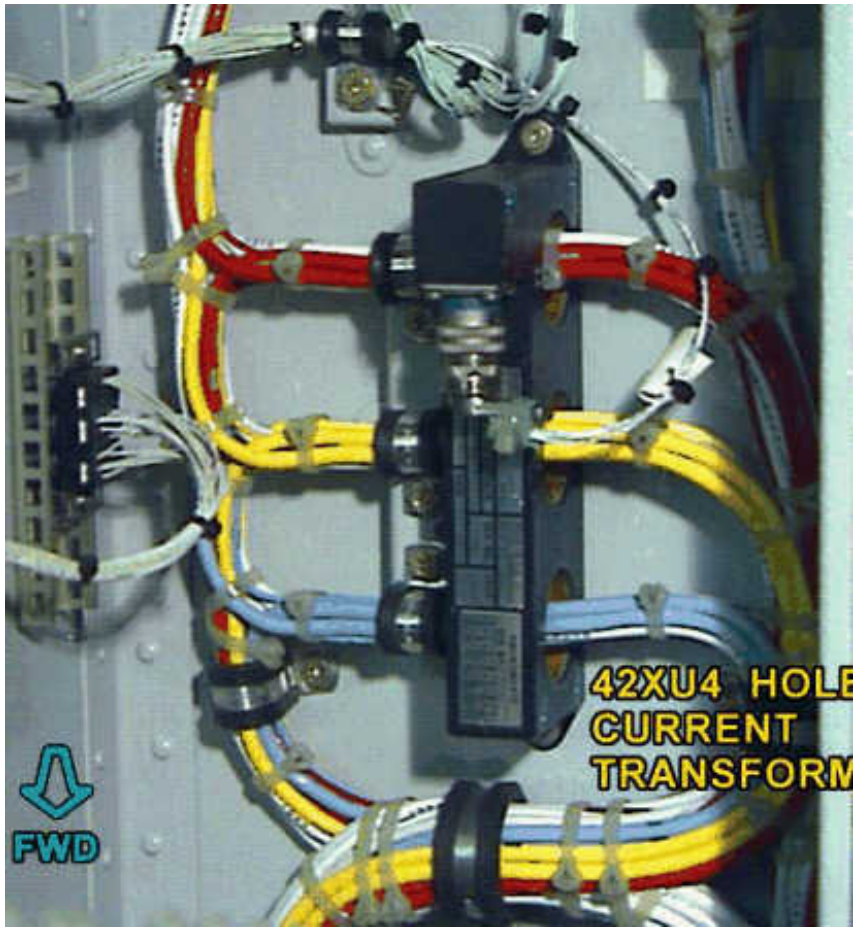

Figure 155 Current Transformer

FOR TRAINING PURPOSES ONLY!

© Lufthansa Technical Training

THREE-PHASE TRANSFORMERS

Construction

A three-phase transformer, in general, consists of three transformers where usually a common iron core is used. In case of very high power transformation or if the load is very asymmetric, which means that the current load on a phase is very different from that on other phases the magnetic fields will differ from each other a lot which might cause problems.

Such a transformer can be found in a star or delta arrangement.

Operation

As usually for three-phase systems the star arrangement is preferred the same properties apply as to a three-phase mains system or generator concerning voltages, current and power for both line-to-neutral and phase-to-phase.

The load applied to the individual phases can be different from the other phases. The Neutral line will be required in this case carrying the difference in current between the phases taking into consideration that there is a phase shift between the individual phases.

Power

So each phase of a three-phase transformer can have an individual power output and therefore an individual power input at the corresponding primary winding.

The total power to be transformed is the sum of the power from the individual phases.

Example

A three-phase transformer supplies a phase-to neutral voltage of 115 volts on all the three phases.

On phase A the current is I = 10 amps, on phase B I = 20 amps, on phase C I = 5 amps.

The power output of the phases is:

A: 115 V x 10 A = 1150 VA

B: 115 V x 20 A = 2300 VA

C: 115 V x 5 A = 575 VA

So the total power is 1150 VA + 2300 VA + 575 VA = 4025 VA

FOR TRAINING PURPOSES ONLY!

© Lufthansa Technical Training

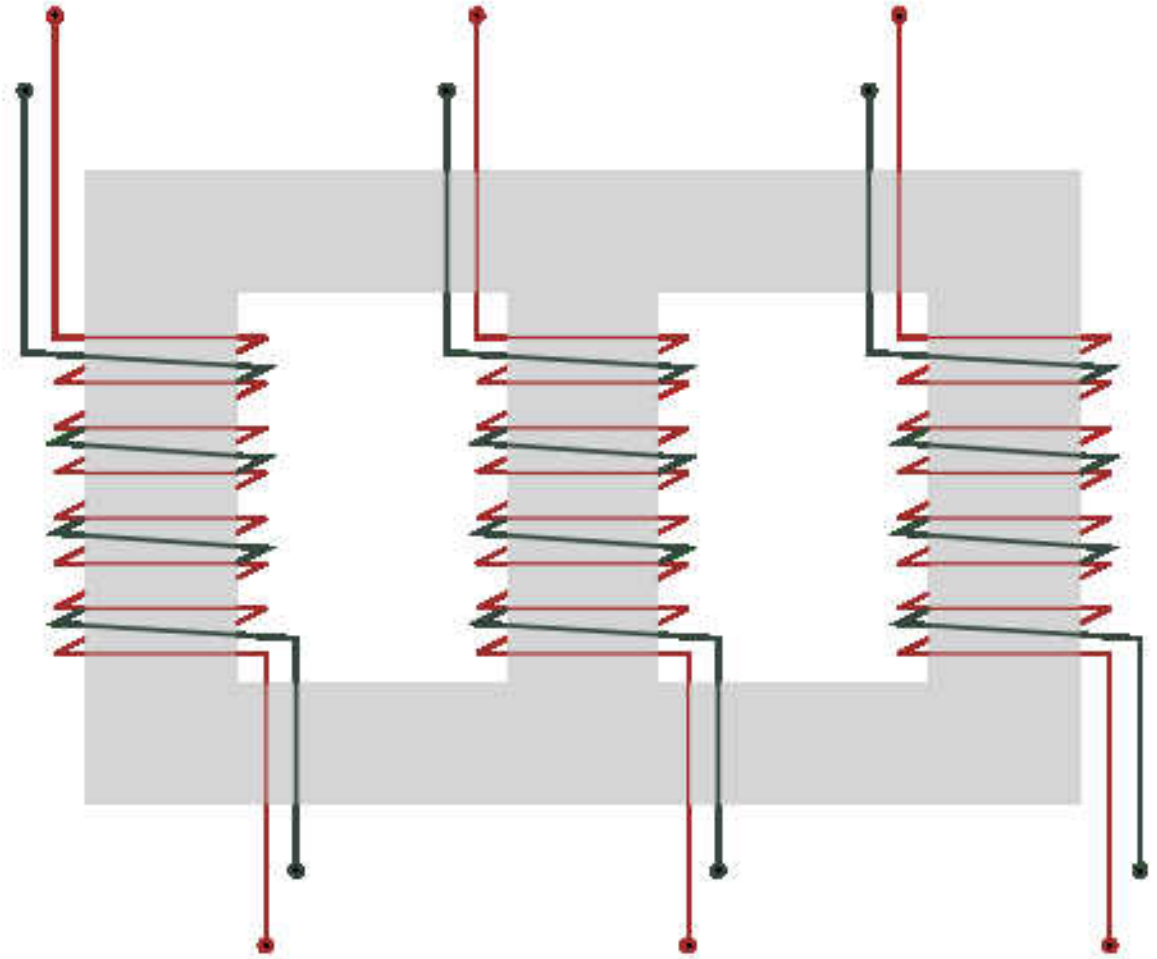

Figure 156 Three-Phase Transformer

FOR TRAINING PURPOSES ONLY!

© Lufthansa Technical Training

M3.12 DC MOTOR/GENERATOR THEORY

GENERAL

Electrical machines are separated into groups depending on their operational principle.

This comprises the already discussed transformers but also motors and generators.

Especially with the motors one derives between various different types.

The types greyed out are quite rare and will not be discussed in detail.

FOR TRAINING PURPOSES ONLY!

© Lufthansa Technical Training

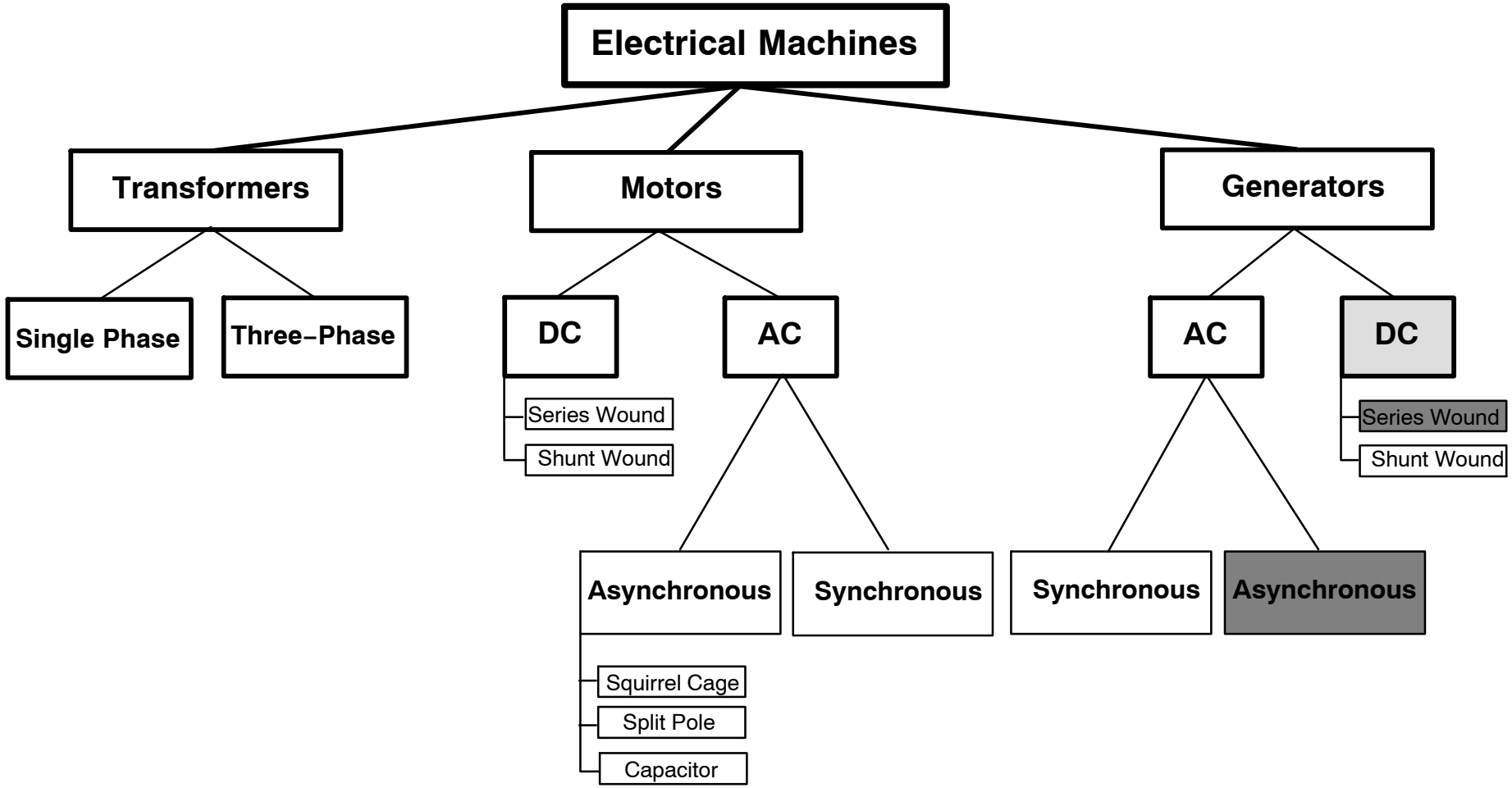

Figure 157 Overview: Types of Electrical Machines

FOR TRAINING PURPOSES ONLY!

© Lufthansa Technical Training

BASICS

General

To understand electrical machines, a good physical knowledge of magnetism is needed. Moreover, a knowledge of current−carrying, still and moved conductors in a magnetic field is essential.

Generators and motors are summarized in the term ”rotating electrical machines”.

Electrical machines make use of magnetism.

Generators convert mechanical energy into electrical energy, whereas motors convert supplied electrical energy into mechanical energy.

The Motor Principle

If a current−carrying conductor is surrounded by the magnetic field of a permanent magnet, the conductor will try to move out of the magnetic field. The conductor will move at right angles to the magnetic field and to the current direction.

The Generator Principle

Induction of motion is the principle of all generators.

The induced voltage increases proportional to magnetic field strength, speed of movement and the length of the conductor which is effective in the magnetic field.

FOR TRAINING PURPOSES ONLY!

© Lufthansa Technical Training

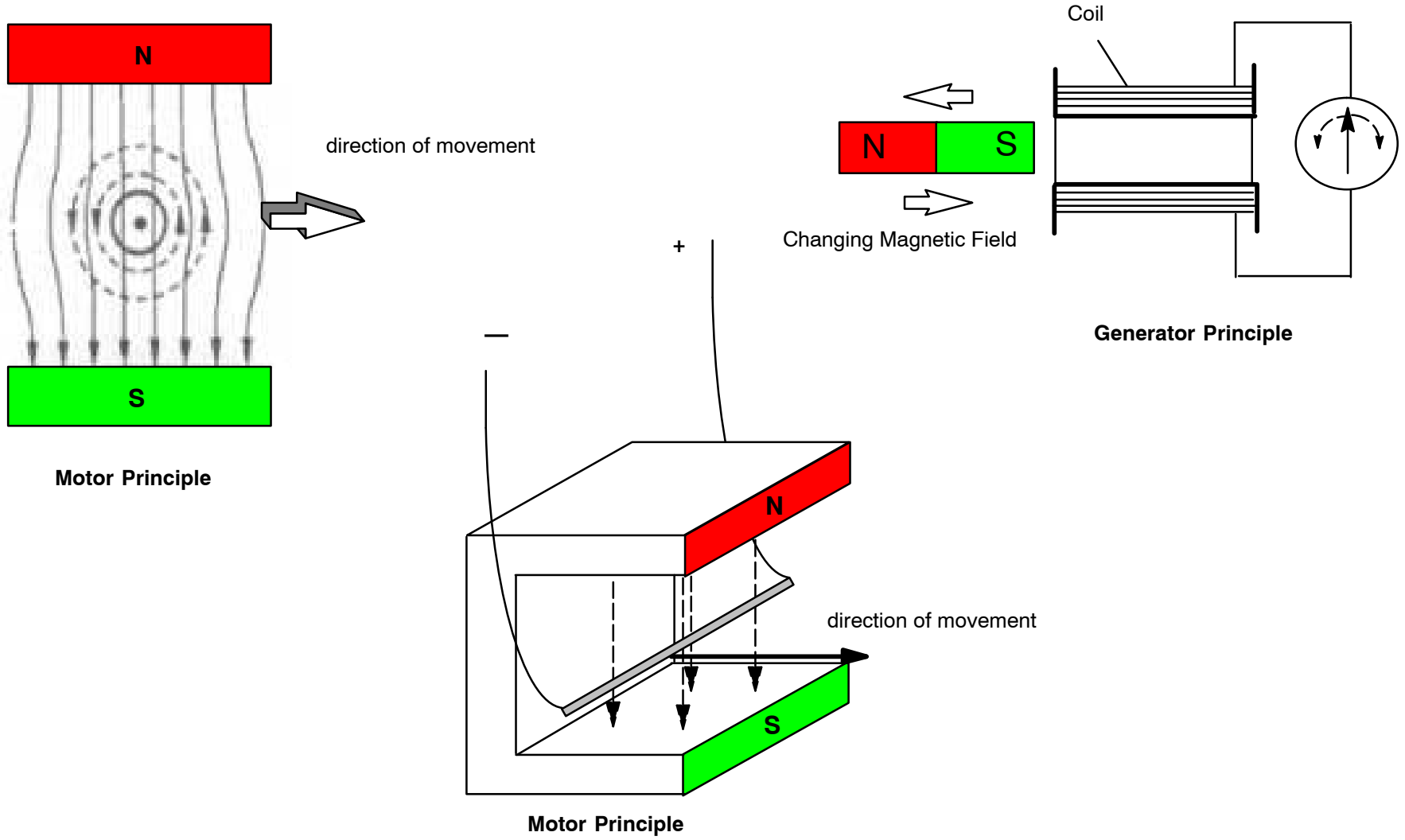

Figure 158 Motor Principle and Generator Principle

FOR TRAINING PURPOSES ONLY!

© Lufthansa Technical Training

CONSTRUCTION OF DC MACHINES

Overview

The diagram shows the construction of a DC machine. The stator consists of a steel ring (yoke), the main poles made of sheet metal with pole core and pole shoe and the excitation winding.

The excitation winding has to generate a static magnetic field in the stator.

Machines with high output in most cases also have commutating poles and a compensating winding.

FOR TRAINING PURPOSES ONLY!

© Lufthansa Technical Training

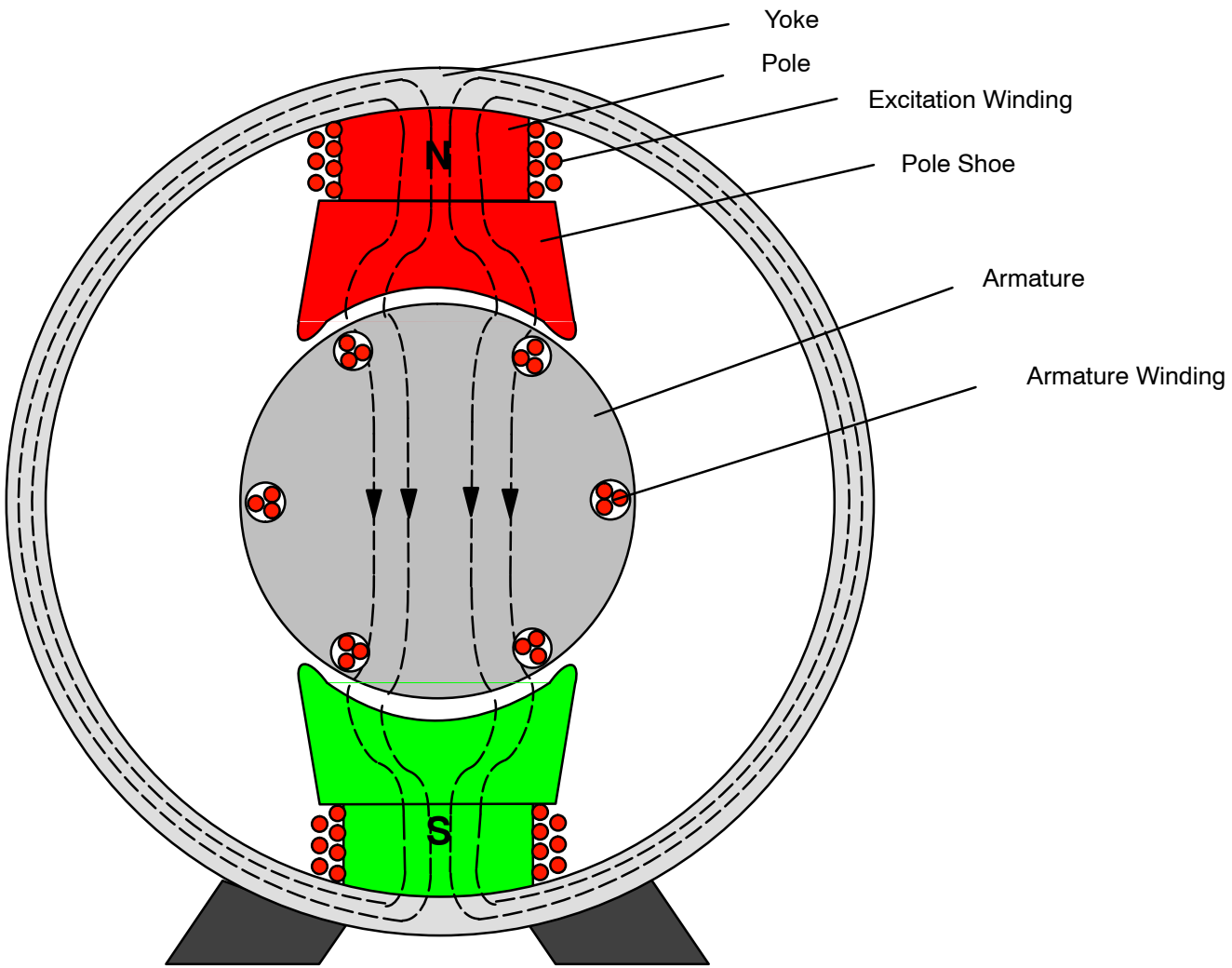

Figure 159 Construction of a DC Machine

FOR TRAINING PURPOSES ONLY!

© Lufthansa Technical Training

COMPONENTS

The Armature

The armature, also called rotor, has 3 parts: The shaft that is fixed on the laminated core of the rotor, the armature winding embedded in grooves and the commutator that is fixed on the shaft; this commutator is also referred to as the collector.

The power supply for the armature is provided by the commutator.

Sliding Contacts

The armature is connected via sliding contacts. For this purpose carbon brushes are used.

The Commutator

The individual coils of the armature winding are connected to the commutator segments.

The coils A ... F shown in the schematic below each symbolize one single winding.

The commutator is made of several hard copper segments that are separated from each other with mica (see illustration).

Operation principle of commutators

If the sliding contacts of the ”simple” motor shown in the schematic are supplied with DC current, a force is exerted upon the coil. A torque is generated which turns the coil, because of the impetus, slightly beyond the horizontal position (development of the neutral zone).

After half a revolution, the current direction in the armature has to be reversed. This is necessary to enable the current−carrying wire loop to generate a permanent torque. The reversal is carried out by the commutator.

In this simple example, the commutator consists of two half shells that are connected to the coils. These two shells are separated from each other with insulation.

If the winding rotates through the neutral zone, the commutator changes the current direction in the coil.

FOR TRAINING PURPOSES ONLY!

© Lufthansa Technical Training

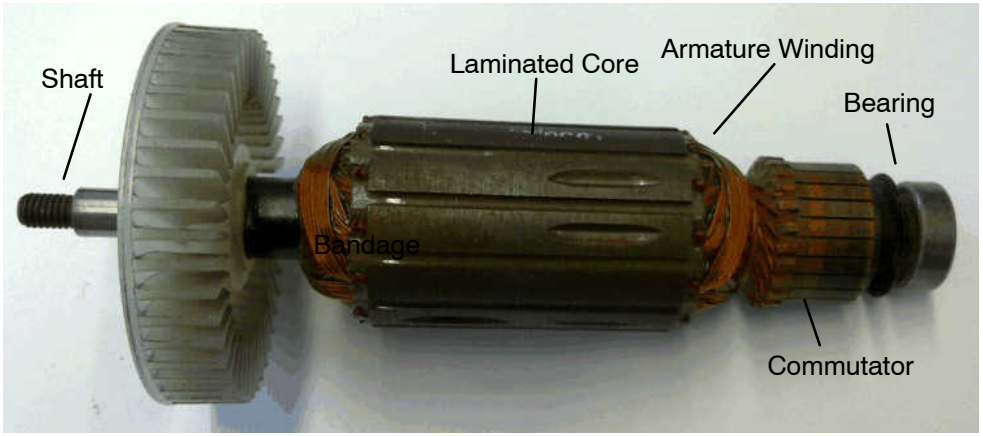

Armature

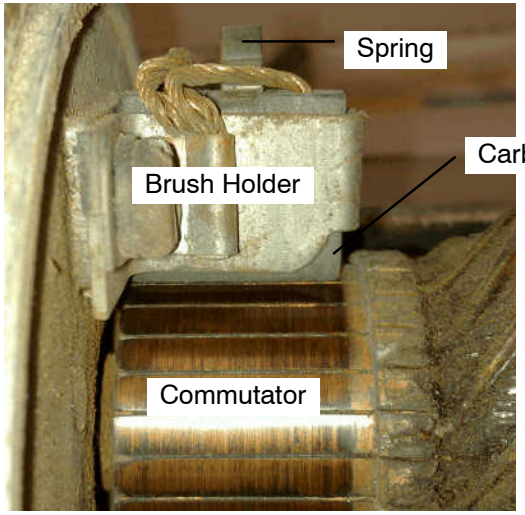

Part of the Commutator with Carbon Brushes

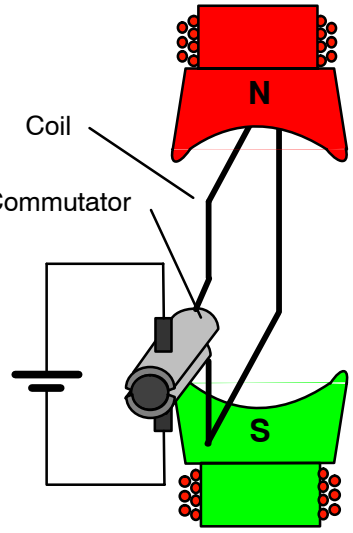

Operation of a Commutator

Figure 160 Armature Construction

FOR TRAINING PURPOSES ONLY!

© Lufthansa Technical Training

CONSTRUCTION STANDARD

General

Electrical machines are classified according to their mode of operation, e.g. DC machines, synchronous machines and asynchronous machines. The principle of operation of the machines is reversible; hence the term ”electrical machines” is generic. Only the application determines whether the electrical machine is a motor or a generator.

Transformers are ”reposing electrical machines”. They convert high voltages or currents into lower voltages or currents and vice versa.

The designs of electrical machines are standardized. A letter followed by a digit is used as an abbreviated code, e.g. B3. The code gives details about the bearing, the fixing, the setting up and the shaft of the machine. The standardized design makes sure that the dimensions of the machines are the same even with different manufacturers.

Detailed information about the designs can be found in up−to−date table books and in DIN− (German industrial standard) or IEC−rules.

Construction

The stationary part of a rotating electrical machine is referred to as stator and the rotating part as rotor. The parts of an electrical machine can be distinguished between structural parts and parts that carry the electrical current or the magnetic flux.

FOR TRAINING PURPOSES ONLY!

© Lufthansa Technical Training

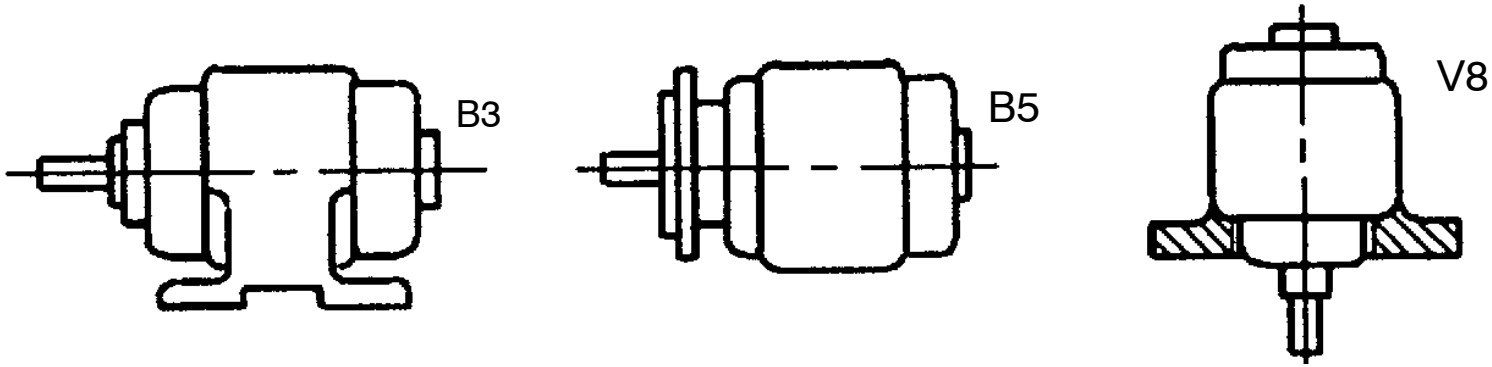

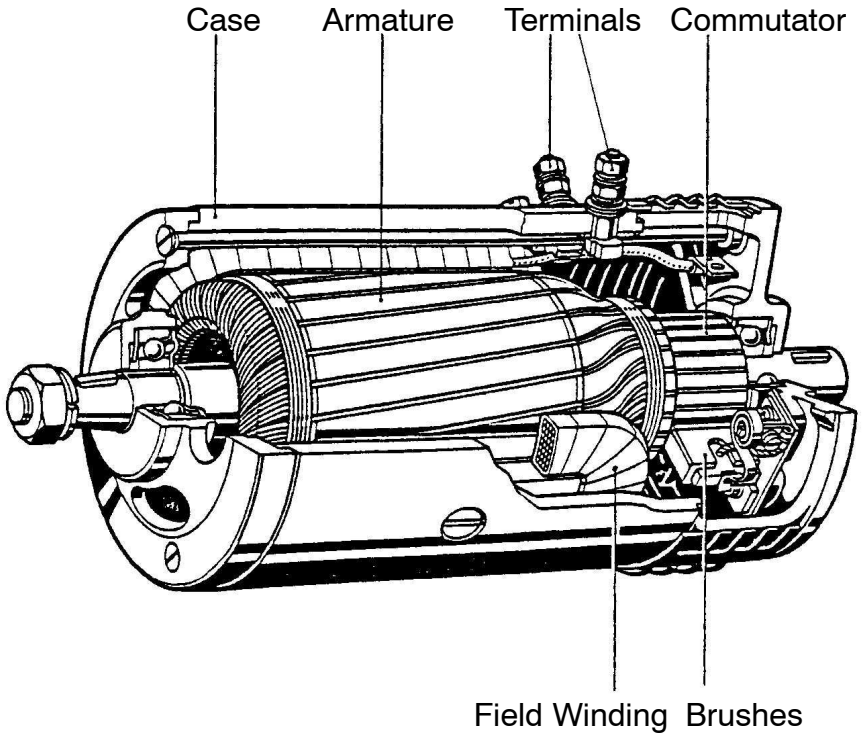

Figure 161 Basic DC Motor Construction

FOR TRAINING PURPOSES ONLY!

© Lufthansa Technical Training

FIELDS OF A DC MACHINE

The Main Field

In the DC machines used today, the main field is generated by electromagnets. The winding of the main field is the winding in the stator. The main field is closed by the laminated core of the armature.

The Field of the Armature

Each current−carrying conductor also generates a magnetic field in the armature. If the currents in parallel−connected conductors have the same direction, they form a common field. This field runs perpendicular to the main field of the machine.

The Total Field / Armature Cross Field

As the field of the armature crosses to the main field, it is called armature cross field. The higher the current flow in the armature, the stronger the cross field. The main field and the armature field overlay and result in a total field. As it runs perpendicular to the main field, the armature field causes a displacement of the neutral zone (imaginary zone in which no induced voltage is generated in the armature). This displacement depends on the current. The higher the current flow, the greater the displacement of the neutral zone.

Armature Reaction

The impact of the armature cross field on the main field is referred to as armature reaction. This reaction displaces the neutral zone and distorts the main field. Regarding a motor that is off−load, the main field is distributed symmetrically over the pole shoes. The higher the load on the machine, the higher the distortion of the main field and the bigger the displacement of the neutral zone.

Neutral Zone

The magnetic induction is highest under the poles and zero between the poles. In the neutral zone there is an area that is free of induction. The carbon brushes, which supply current to the armature, also have to be located in this area.

If the neutral zone is displaced, it would result is heavy ”brush sparking”, because the current supply is not any more in the area that is free of induction. Brush sparking causes high wear at the commutator and at the carbon brushes. To avoid the wear, the carbon brushes would have to be adjusted accordingly to the load, to ensure that they are always located in the neutral zone. However, this is not possible at constantly fluctuating loads. The use of ”commutating poles” can cancel out the displacement of the neutral zone.

FOR TRAINING PURPOSES ONLY!

© Lufthansa Technical Training

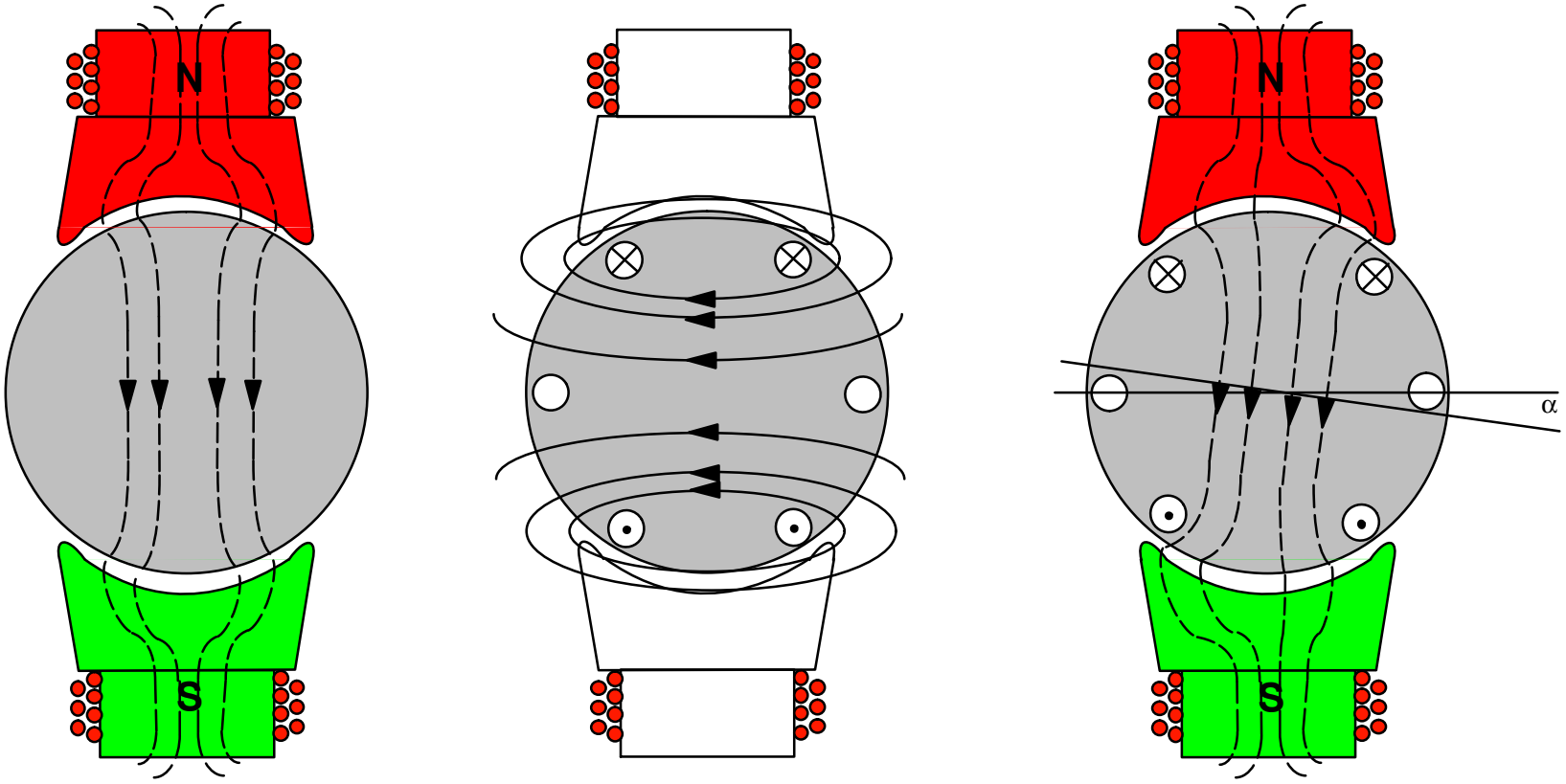

Figure 162 Fields of a DC Machine

FOR TRAINING PURPOSES ONLY!

© Lufthansa Technical Training

COMMUTATING POLES AND COMPENSATING WINDING

Commutating Poles

Commutating poles are small poles that are located between the main poles. They are connected in series with the armature and hence oppose the armature cross field with an commutating pole field of the same size.

The illustration shows that, because of these commutating poles, the neutral zone stays at the same place. It even stays at the same place with a fluctuating load. The armature cross field is then cancelled out in the neutral zone.

Compensation Winding

As the commutating pole field cannot cover the total armature cross field, an additional compensating winding can be placed in the main poles.

Current Flow

Commutating poles and compensating windings are connected in series and are both supplied with current from the armature.

Purpose

By cancelling out the armature cross field the brush adjustment in the neutral zone is not necessary.

FOR TRAINING PURPOSES ONLY!

© Lufthansa Technical Training

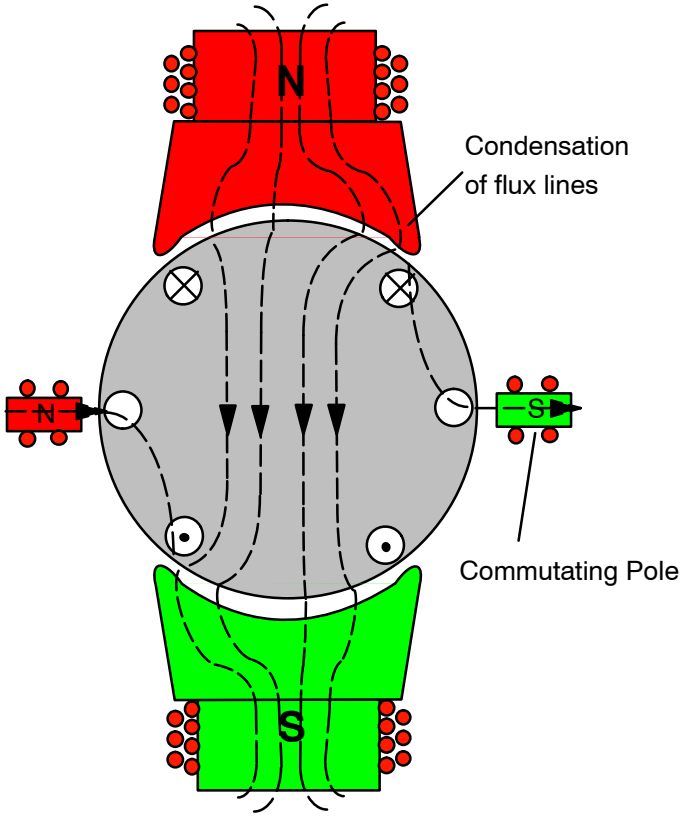

DC Machine with Commutating Poles

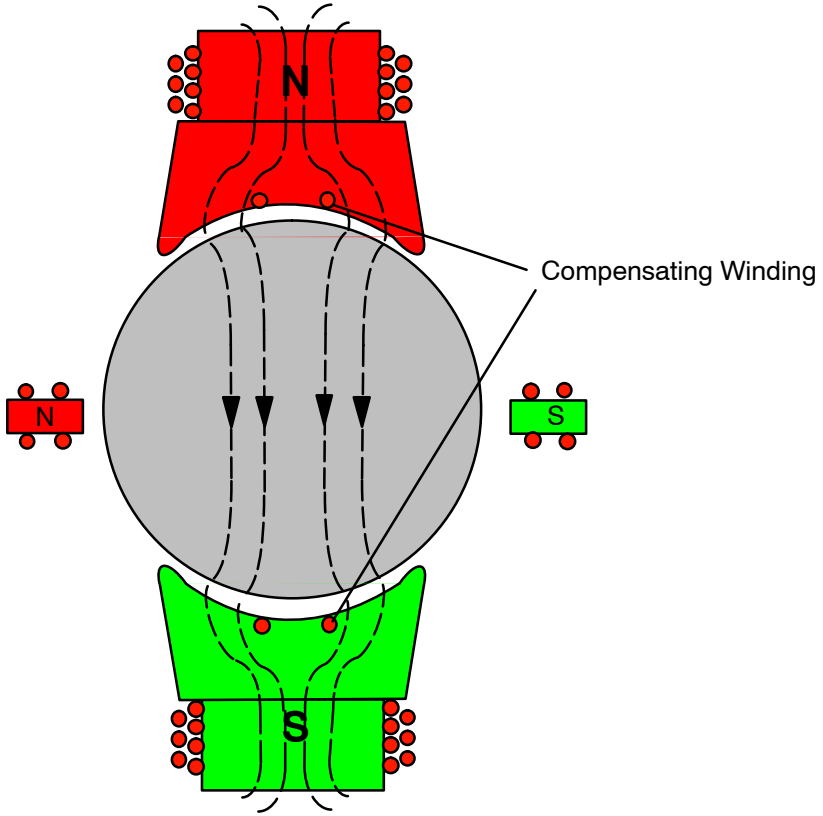

DC Machine with Compensating Winding
and Commutating Poles

Figure 163 Motor with Commutating Poles and Compensating Winding

FOR TRAINING PURPOSES ONLY!

© Lufthansa Technical Training

SPEED CONTROL OF DC MACHINES

General

The speed of a DC machine can be highly variable. Two methods are applied for speed controls in practice.

Voltage control

The speed control via the armature voltage is applied where a speed range from a standstill to rated speed is required. For this purpose the field must be fully excited. A reduction of the armature voltage and a higher load result in decrease of speed. At this mode of operation the efficiency is lower because of heat losses in the series−connected resistor. The starting up at from zero speed requires a starter that can be set in fine steps.

The thyristor−controlled rectifier provides a different, considerably more efficient method for speed variation. With this rectifier a variable adjustable DC voltage can be generated from the supply voltage. This process can be easily achieved and is almost without loss. However, the excitation winding has to be connected to a constant operating voltage.

Field Control

We can see from the illustration that a series−connected resistance in the excitation circuit results in a reduction of the excitation current (field weakening).

Thus the machine can be operated above its rated speed.

However, the field weakening may only be applied to a certain degree, because the commutator and the armature could be destroyed due to the occurring centrifugal forces. The excitation current must never be switched off completely, because otherwise the machine would infinitely increase its speed or, in other words, ”race”.

The resistive stress grader method slightly reduces the torque of the machine.

The output power depends on the strength of both the magnetic fields of the motor. The stronger the fields are the higher the output power will be.

Both, reducing the stator field and the rotor field, will decrease the output power of such a motor.

FOR TRAINING PURPOSES ONLY!

© Lufthansa Technical Training

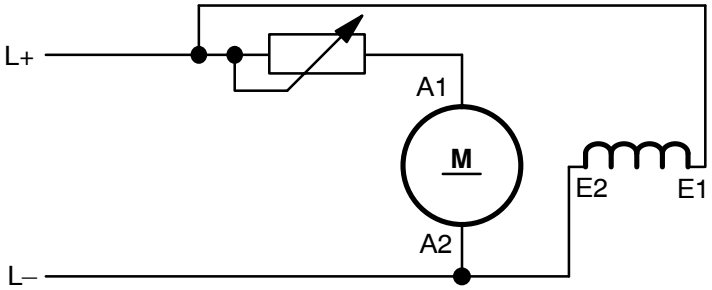

Speed variation by controlling the armature voltage

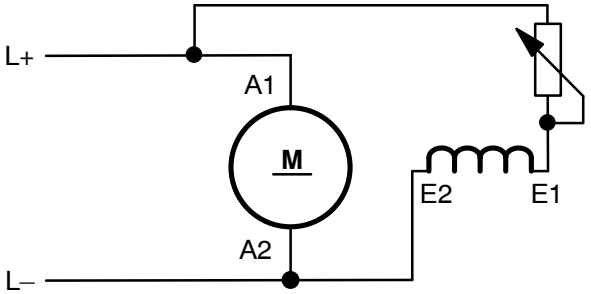

Speed increase by resistive stress grader

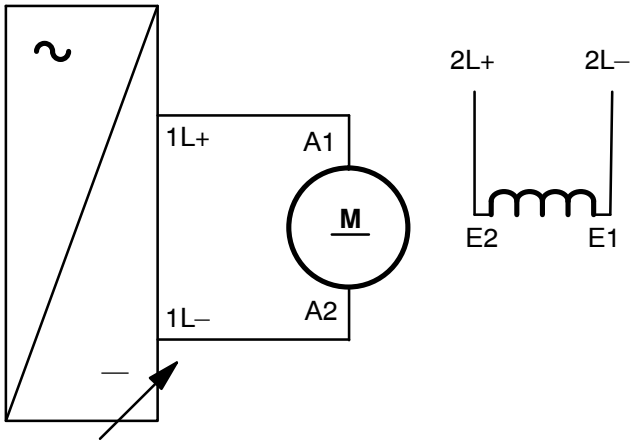

Speed variation by thyristor–controlled rectifier

Figure 164 Speed Control

FOR TRAINING PURPOSES ONLY!

© Lufthansa Technical Training

ROTATING DIRECTION OF DC MACHINES

Change of the Polarity

The definition of the rotating direction of an electrical machine was already determined.

For all DC machines the rotating direction is changed by reversing the current direction in the armature winding or the excitation winding. Preferably the armature winding is reversed.

The rotating direction of DC machines cannot be changed by interchanging the two input leads!

FOR TRAINING PURPOSES ONLY!

© Lufthansa Technical Training

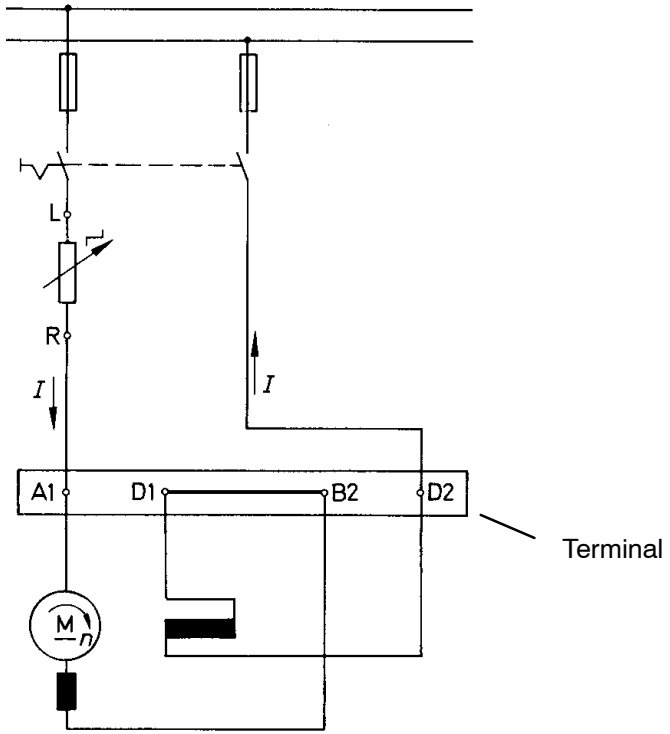

Schematic of a series–wound motor for clockwise operation

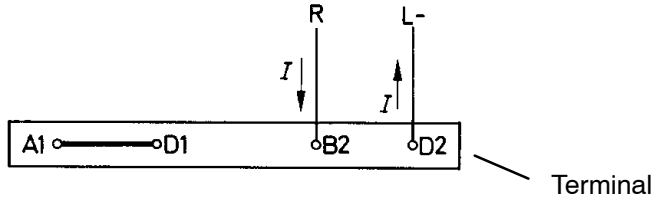

anti-clockwise operation

Figure 165 Rotational Direction

FOR TRAINING PURPOSES ONLY!

© Lufthansa Technical Training

SHUNT–WOUND DC MACHINES

General

Shunt-wound DC machines are used as DC motors and as DC generators.

Construction

A shunt–wound DC machine mainly consists of a stator with the excitation winding, the rotor with the armature winding and the carbon brushes. Together with the commutator, the carbon brushes supply the current to the armature.

MOTOR

Purpose

The DC shunt–wound motor is the most commonly used DC motor (apart from in aircraft). It is used whenever a constant speed at various loads is required, e.g. for machine tools, hoists or pumps.

Circuit

The excitation winding and the armature winding are connected in parallel, to the same power supply.

The shunt–wound DC machine can also be operated as a separately excited motor. The excitation winding then is supplied by its own power supply.

Operating Characteristic

The speed of the shunt–wound motor is nearly independent from the load, i.e. the speed only drops slightly at load. At no–load operation the motor reaches its maximum speed, which is stable.

These two characteristics are also referred to as shunt characteristics.

The current consumption of the excitation winding is exactly the same at no–load operation as it is at full–load operation. The amount of the armature current depends on the load on the motor. Hence a change in load results in a change in armature current. The armature current is proportional to the torque (see load characteristic of a shunt–wound motor).

FOR TRAINING PURPOSES ONLY!

© Lufthansa Technical Training

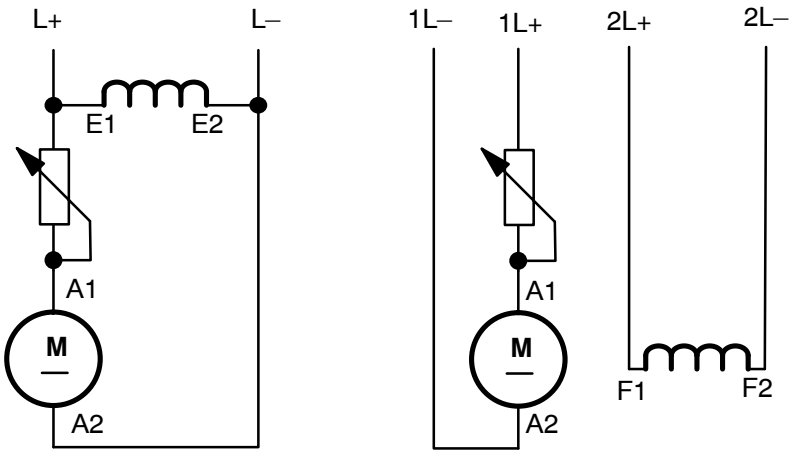

windings in parallel

separated power sources for the windings

Connections of a shunt–wound DC machine

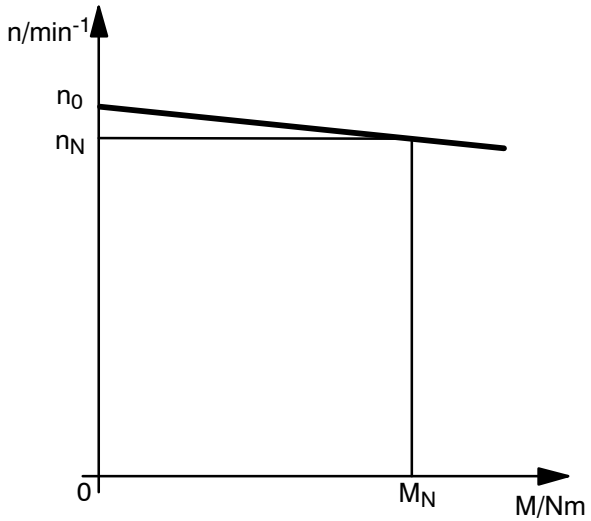

Load characteristic

Figure 166 Shunt-Wound Motor

FOR TRAINING PURPOSES ONLY!

© Lufthansa Technical Training

GENERATOR

General

If a voltage is applied to a field winding and the armature is put into rotation, the machine generates a voltage and works as a generator.

The shunt−wound DC machine can be operated as a self−excited generator or as a separately excited generator.

Polarity

The polarity and therefore the direction of the current is given by the polarity of the excitation current and the rotational direction.

When correct, the positive pole is at the connector A1.

Separately Excited Shunt−Wound Generators

Considering the separately excited shunt−wound generator, the field winding is replaced by an external power supply.

The size of the exciting current determines the generated armature voltage. If there is a load on the armature, the generated armature voltage falls slightly. However, it can be increased again to the desired value by increasing the exciting current, as long as the load is in the permissible range.

So the output voltage and power can be controlled by the excitation current applied to the field winding,

Self−Excited Shunt−Wound Generators

Considering the self−excited shunt−wound generator, the field winding is connected in parallel to the armature.

If the armature is driven from a standstill, the residual magnetism generates a low voltage in the iron core of the machine. Because of this voltage, a current flows in the machine. This current causes the magnetism to increase, which results in an increase in excitation and in the self−excitation of the machine.

Conditions for self−excitation are:

- an existing residual magnetism
- the right polarity of the excitation winding
- the right spin direction of the machine.

If there is a polarity reversal, the residual magnetism is reduced and the machine cannot excite itself.

If there is a load, the voltage at the self−excited generator falls more than the voltage at the separately excited generator. The voltage, which heavily depends on the load, is readjusted by a field regulator.

FOR TRAINING PURPOSES ONLY!

© Lufthansa Technical Training

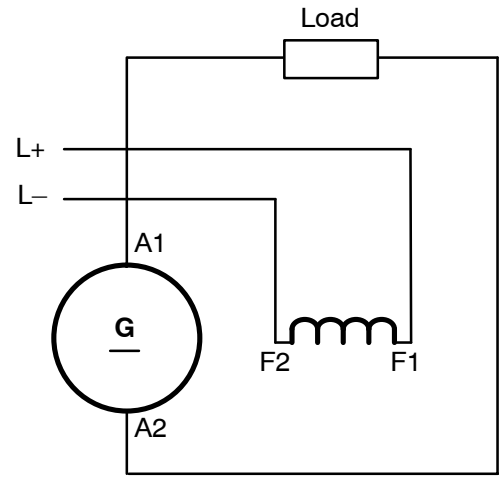

Separately excited shunt–wound generator

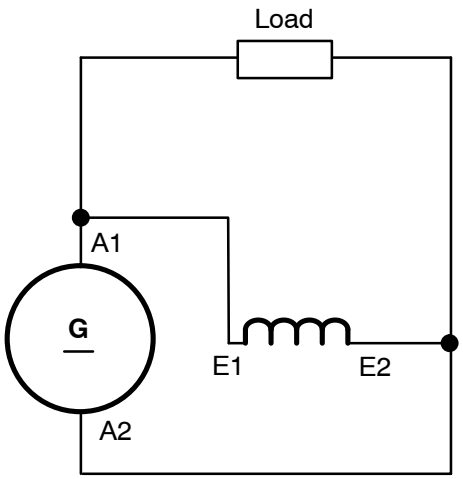

Self–excited shunt–wound generator

Figure 167 Shunt-Wound Generator

FOR TRAINING PURPOSES ONLY!

© Lufthansa Technical Training

SERIES–WOUND DC MACHINES

General

Series–wound DC machines are used as motors.

It is possible, but very unusual to use them as generators

Series–wound motors have a very high starting torque. They must never be operated without torque load, because they may race in no–load operation.

Construction

The series–wound machine basically consists of the stator with the excitation winding, the rotor with the armature winding and the carbon brushes.

Together with the commutator, the carbon brushes supply current to the armature.

Circuit

Considering the series–wound machine, the armature winding is connected in series with the excitation winding. This means that their common current flows through both windings.

MOTOR

Purpose

Series–wound motors are applied as car starters, in hoists, municipal railroads, tramways and electric vehicles, but also for windscreen wiper motors or shut–off valves.

Operating Characteristic

The current consumption of the series–wound machine is particularly high during the start–up and has to be limited via the starters.

Considering the series–wound DC machine, the speed highly depends on the load. A change of load results in a change of current. By increasing the load, the current increases and the speed decreases. During the start–up and at high loads the series–wound motor consumes a high current, which results in the generation of a high torque.

These characteristics are also called series–wound characteristics.

A series–wound motor in operation is also a generator. This means a voltage is induced in the armature winding of the running motor. This voltage opposes the applied voltage (terminal voltage). The speed is strongly dependent on the load.

No Idle Condition Allowed

A series–wound motor must under no circumstances be operated off–load. At off–load operation it would increase its speed until the armature is destroyed. In other words, the armature races at no–load operation.

The starting–up

The series–wound DC motor must be accelerated by a variable resistor (starter). This ensures that the machine can be slowly accelerated.

Nowadays the starting–up armature voltage is reduced with electronics, i.e. with phase angle controls via thyristors. The advantage of this method is that the starting–up armature voltage can be controlled almost without losses.

GENERATOR

Operating Characteristic

The terminal voltage and the speed are strongly dependent on the load.

If the current flows across the armature and the excitation winding in the opposite direction, the series–wound generator reverses its polarity. The series–wound generator can only be fully excited if the total load current (rated current) flows.

If there are very high loads, the generator is in danger of a short circuit.

The excitation winding and the armature winding are connected in series. The load current I at the same time is the excitation current I_E and the armature current I_A. The generator can only be fully excited if there is normal load current.

Purpose

Due to this disadvantage of constant load, the field of application for the series–wound generator is highly limited.

For this reason the generator is not discussed in detail.

FOR TRAINING PURPOSES ONLY!

© Lufthansa Technical Training

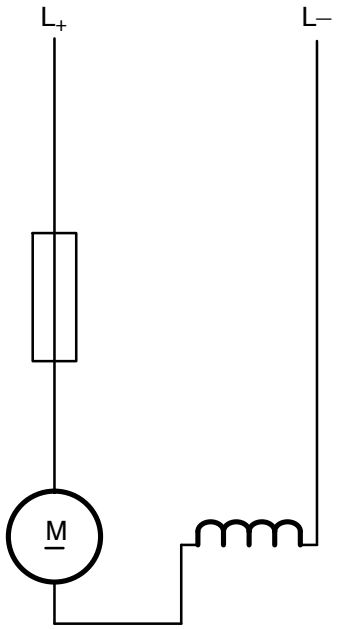

Circuit

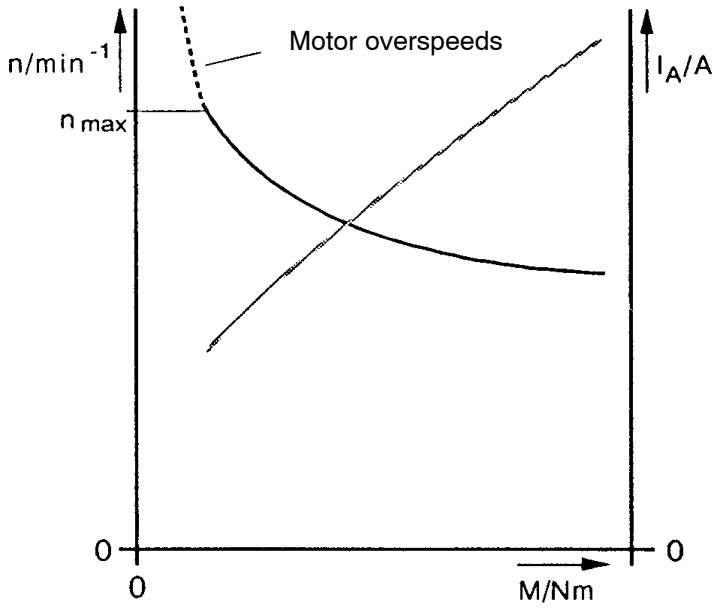

Load Characteristic

Figure 168 Series-Wound Motor

FOR TRAINING PURPOSES ONLY!

© Lufthansa Technical Training

STARTER GENERATOR

General

A very special kind of DC machine is the so called starter generator.

It is a combination of DC generator and DC motor.

Purpose

It is used to start up a turbine as well as to provide electrical power as soon as the turbine is running.

In order to start up a turbine a high torque is required. So a series wound motor is used. for generator operations a shunt wound machine is preferred.

Construction

Due to the different tasks two field windings are required.

One is a winding from quite a thick wire with only few turns. During startup it carries a high current and is in series with the rotor winding.

An additional winding is formed by a thin wire but has many turns. It provides a magnetic field where the rotor revolves within. It is connected in parallel to the rotor winding.

Due to the different requirements of the tasks performed the properties of the brushes have to be adjusted. Usually two pairs of brushes are used.

FOR TRAINING PURPOSES ONLY!

© Lufthansa Technical Training

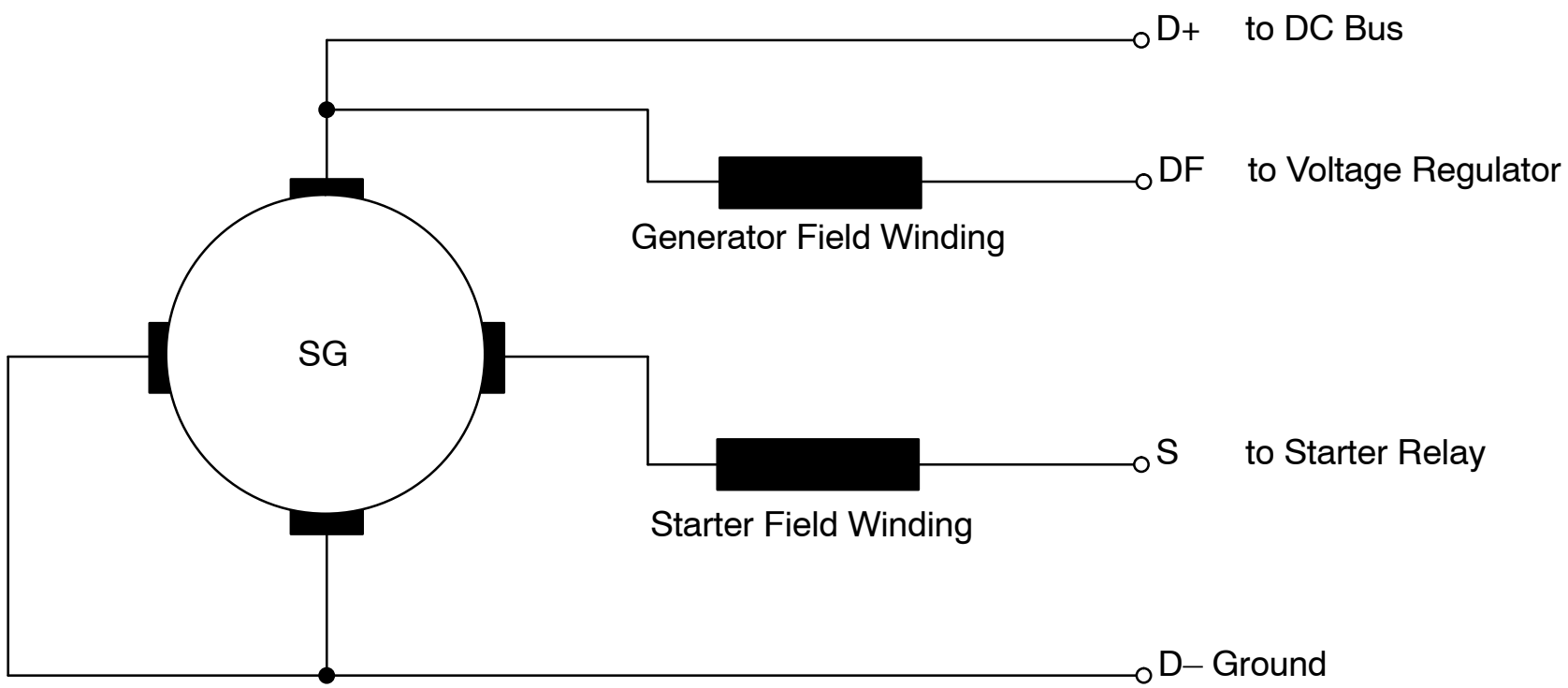

Figure 169 Starter Generator

FOR TRAINING PURPOSES ONLY!

© Lufthansa Technical Training

COMPOUND DC MACHINES

General

Depending on the type of winding, the shunt–series DC machine can be either used as a shunt–wound DC machine or as a series–wound DC machine.

Hence shunt–series machines can be used as motors or as generators.

Purpose

A shunt–series DC machine is used where the starting torque of the shunt–wound motor is too low and where the speed drop of the series–wound motor is too high.

Circuit

The shunt–series DC machine is a combination between a shunt–wound DC machine and a series–wound DC machine. It has two excitation windings. One of them is connected in series with the armature (series winding), the other is connected in parallel with the armature (shunt winding).

Depending on the connection at the terminal, one or both stator windings can be activated.

Construction

The shunt–series DC machine mainly consists of a stator with the two excitation windings and the rotor with the armature winding and the carbon brushes. Together with the commutator, the carbon brushes supply current to the armature. Thereby the windings are connected in such a way that their excitation fields overlay each other. This overlaying can either strengthen or weaken the field.

The operational characteristics of the shunt–series DC machine can be influenced by varying the size of the shunt winding and the series winding. Therefore either the series behavior or the shunt behavior of the machine prevails.

MOTOR

Operating Characteristic

At a no–load operation the shunt–series DC machine behaves like a shunt–wound motor, i.e. it does not race. Racing can only occur if both excitation fields (shunt and series) fail or if the two fields cancel each other out.

If the motor is on load, the speed does not decrease as much as the series–wound motor.

At low speed the motor generates a high starting torque and behaves like a series–wound motor.

FOR TRAINING PURPOSES ONLY!

© Lufthansa Technical Training

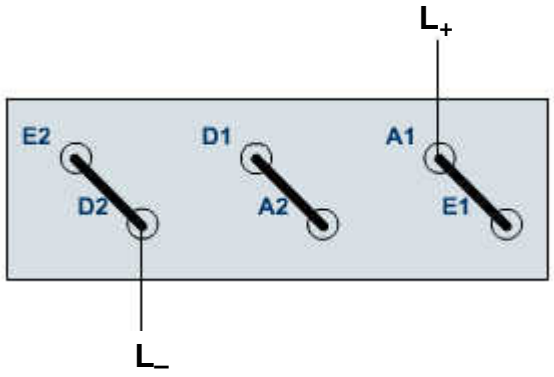

terminal for clockwise operation

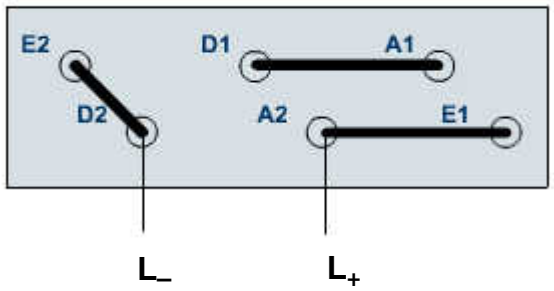

terminal for counter-clockwise operation

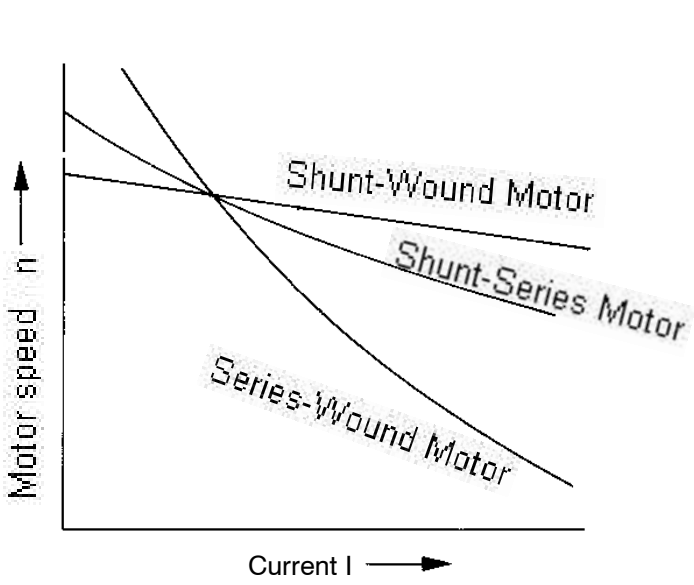

Speed Characteristic

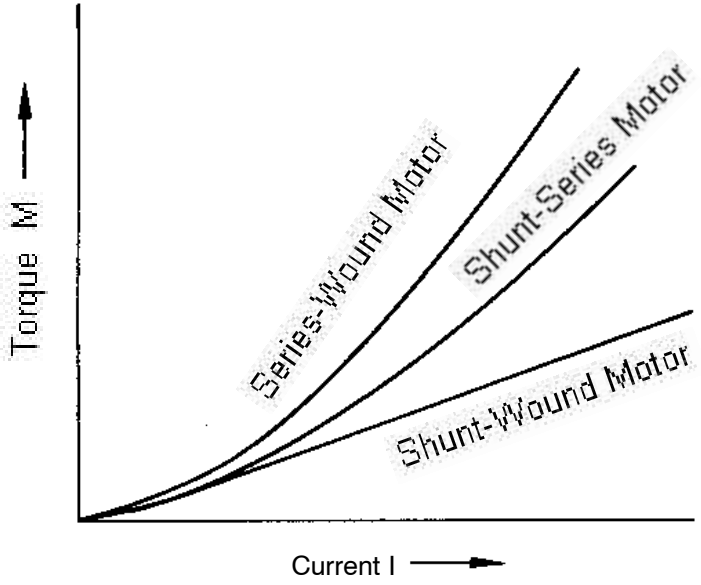

Torque Characteristic

Figure 170 Compound DC Machine (Characteristic)

FOR TRAINING PURPOSES ONLY!

© Lufthansa Technical Training

GENERATOR

General

The compound DC machine can be connected as a shunt-wound machine and used as a DC generator then.

Circuit

Both stator windings can be connected by a way that they support each other.

Operating Characteristic

The compound machine has the possibilities of a shunt-wound generator and a series-wound generator.

It can be separately excited or self excited.

During high load conditions the output voltage is constant.

FOR TRAINING PURPOSES ONLY!

© Lufthansa Technical Training

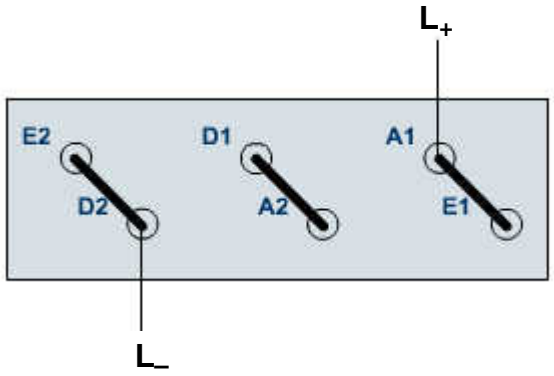

terminal for clockwise operation

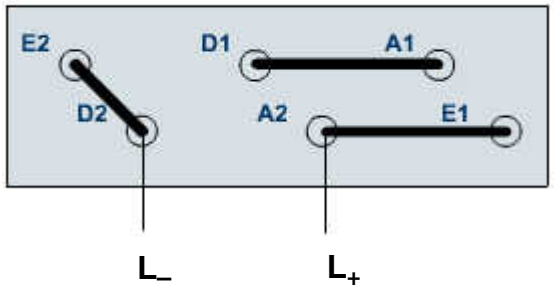

terminal for counter-clockwise operation

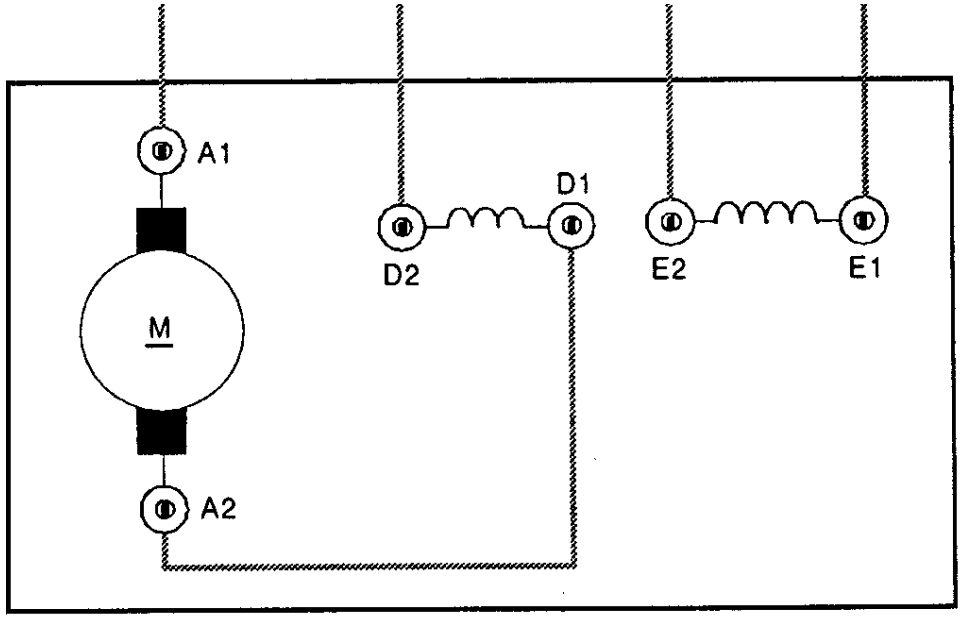

Figure 171 Compound DC Machine (Circuit)

FOR TRAINING PURPOSES ONLY!

© Lufthansa Technical Training

UNIVERSAL MOTORS

General

The universal motor is a small series–wound motor, which can be either operated by a DC or by a single–phase current at normal power frequency. For this reason the universal motor is also called all–mains motor. The universal motor is primarily designed for AC because the mains almost only carry this kind of current.

Purpose

The field of application for this motor is wide. It is used e.g. in domestic appliances (blender, vacuum cleaner, power drill etc.)

Construction

The difference in construction of the universal motor to the normal DC motor is the compact laminated stator, which forms one part with the pole shoes. In order to avoid eddy currents if AC voltage is applied, the laminated stator is put together with dynamo sheets.

The excitation winding is divided symmetrically to the armature. Therefore the coil sections of the excitation winding act as reactors that contribute to the radio interference suppression. For technical and efficiency reasons the armature with its winding is manufactured with machines.

Driving Speeds

The rotating field speeds of the single–phase induction motor are synchronous, determined by the power frequency and the number of pole pairs. Contrary to that, the universal motor can reach speeds between 3,000 and 30,000 rpm.

Operating characteristic

As we know, at AC voltage, the excitation windings have an inductance besides the ohmic resistance. Therefore the voltage drop is higher at the excitation windings. At the changeover from DC voltage to AC voltage, the speed and the output decrease by approximately 50 %.

For the DC operation the motor has more windings than for AC operation.

The mode of operation of the universal motor is the same as for the series–wound DC motor. At strong loads, there is a high load current flowing in the armature winding and the excitation winding.

Both windings generate strong magnetic fields. Because of these fields the motor can develop a high torque during start–up and during operation. If the load is reduced, the current and therefore the magnetic fields decrease. As a result the motor develops a higher speed and may race. For safety reasons, in some cases a centrifugal governor is fixed on the motor shaft.

The operating behavior of the universal motor at DC voltage is the same as the operating behavior of the series–wound DC motor. Universal motors have a high starting torque and, like other series–wound motors too, tend to race. For this reason they must not be operated off–load. At load, the speed decreases quite heavily. Normally there is a fan blade fitted in the motor for cooling. This fan blade already puts a small load on the motor, so that racing can not happen.

As the field and the armature change their direction simultaneously at AC voltage, the direction of the rotating field stays the same. To change the rotating direction, the polarity of either the armature winding or the excitation winding has to be reversed.

For operating the universal motor at AC voltage with approximately the same output, fewer turns are required. The second possibility is to have the same number of turns and a higher voltage.

With on–load AC operation, the speed decreases more than it does at DC operation. The rated torque is often slightly lower at AC operation.

The diagram shows the load characteristics of the universal motor at a DC and an AC operation.

At AC voltage, the efficiency is also lower than at DC voltage. Moreover, at AC voltage, there is the power factor, which additionally reduces the power slightly.

As there are only universal motors for an output of up to 2 kW of power, they can be switched on directly, i.e. without a starter.

FOR TRAINING PURPOSES ONLY!

© Lufthansa Technical Training

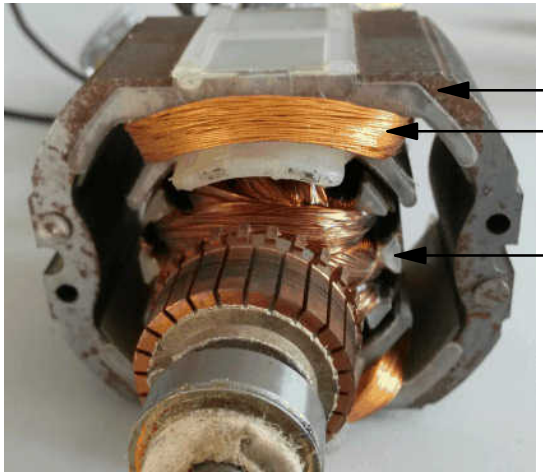

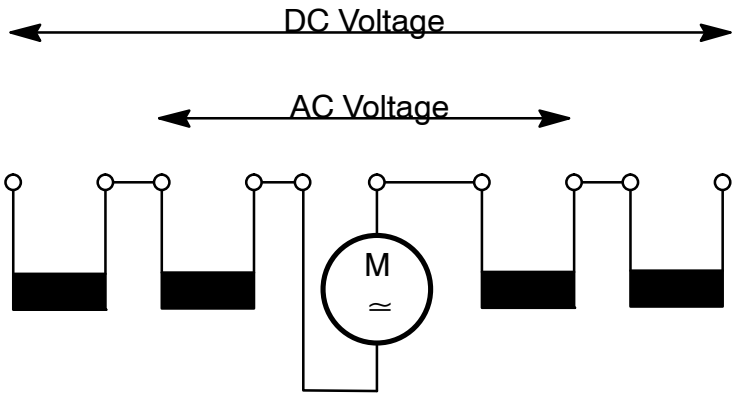

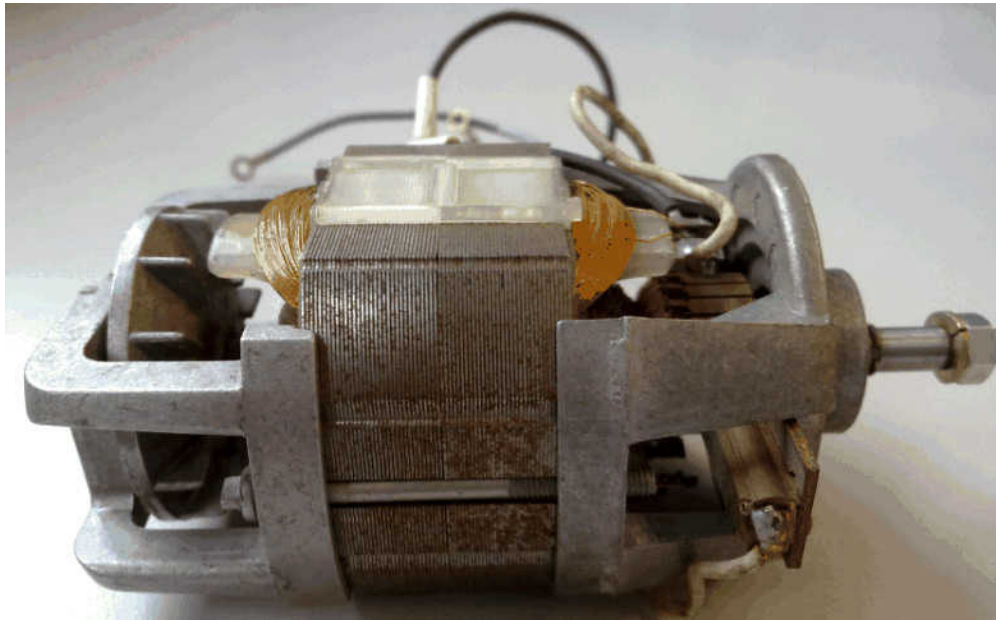

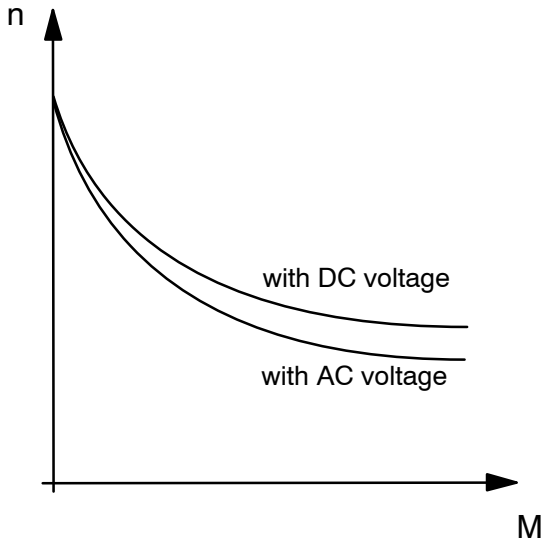

Figure 172 Universal Motor

FOR TRAINING PURPOSES ONLY!

© Lufthansa Technical Training

Alternator

General

Modern DC generators are revolving-field machines with three stator windings like in a three phase AC generator. The output voltage is rectified within the alternator.

To transfer the exciter current into the rotating part of the generator it uses sliprings and brushes.

The exciter current is much smaller than the load current and it is not switched via a commutator. So the load of the brushes is smaller than in a DC generator with commutators. By this, the alternator does not require much maintenance.

Special Requirements

This type of generator has the disadvantage that the inner resistance is high. This is caused by the diodes. Because of that the voltage depends on the load current. For a constant output voltage, a quick voltage regulation system is needed.

Additionally, a battery must be connected all times to cut off voltage peaks.

FOR TRAINING PURPOSES ONLY!

© Lufthansa Technical Training

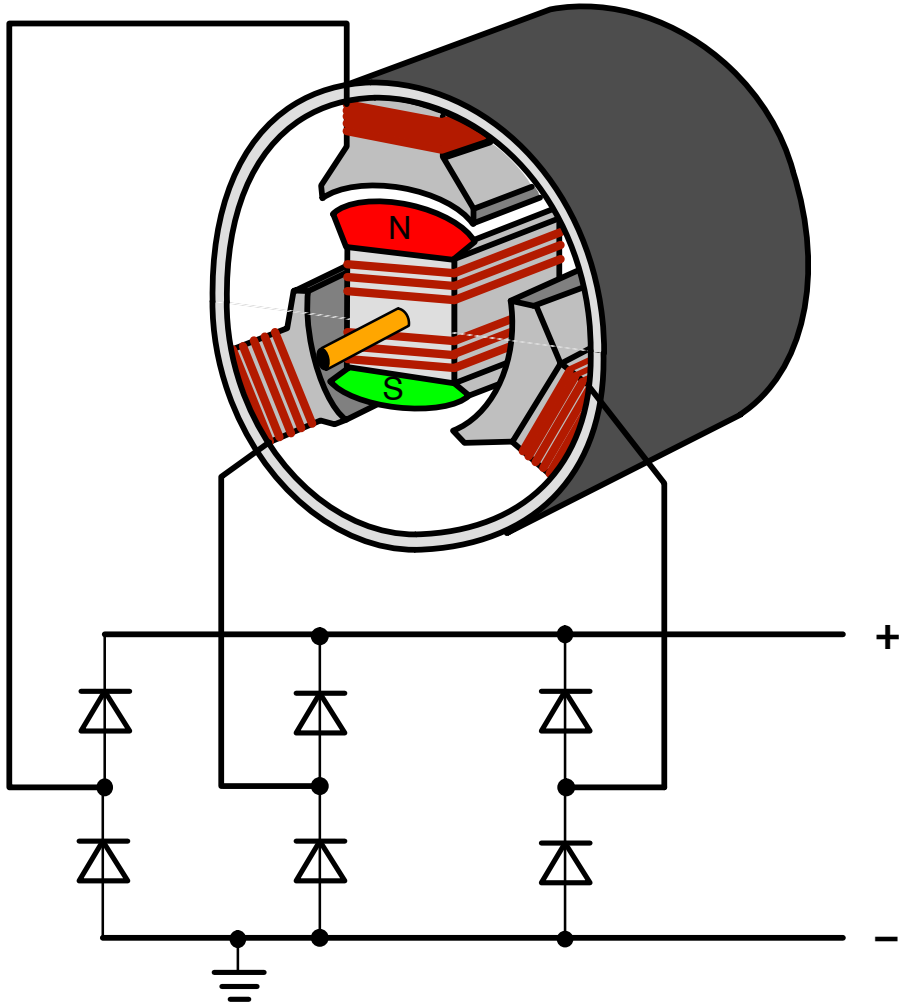

Figure 173 Alternator

FOR TRAINING PURPOSES ONLY!

© Lufthansa Technical Training

M3.17 AC GENERATORS

THREE–PHASE GENERATOR

General

There are synchronous machines and asynchronous machines. Synchronous machines have a constant ratio of rotation speed and frequency.

AC generators are mainly synchronous machines.

For the generation of rotary current with three phases, three stator coils are needed. They must have an angle of 120° to each other.

There are various methods to drive a generator. In aircraft, generators are mainly driven by the engines.

Types of excitation in synchronous generators

To generate energy in a generator a magnetic field is required. This field is established by using DC, which is applied to one of the excitation windings.

The necessary power for exciting the magnet wheel is, depending on the size of the machine, 5 % of the rated value.

With synchronous machines three different excitation types can be distinguished.

Self–excitation

This type of excitation is present, if part of the energy generated by the generator is used for excitation.

Excitation by a Permanent Magnet Generator

The excitation power is generated by an additional small generator mounted on the shaft inside the main generator. This power is finally fed to the main generator.

For safety reasons this type of excitation is preferred.

Separate excitation

In separate excitation, the required excitation energy is delivered by an external power supply.

Principle

The magnetic wheel of a rotating field machine is excited and put into rotation and thus induces a sinusoidal voltage in the stator winding.

If the off–load synchronous generator is loaded, the generated voltage decreases significantly. Thus the power for excitation must constantly be adjusted to the load of the generator. The power for excitation must therefore be controlled.

Load

If the energy generated by the generator is supplied to a three–phase mains, conditions for synchronization must be met by all means: voltage and frequency must be constant.

However, if the generated energy is supplied directly to the load (without mains supply), it is designated as an isolated operation. Here, the synchronization conditions can be ignored. Voltage and frequency must remain constant or be adjusted to the load.

FOR TRAINING PURPOSES ONLY!

© Lufthansa Technical Training

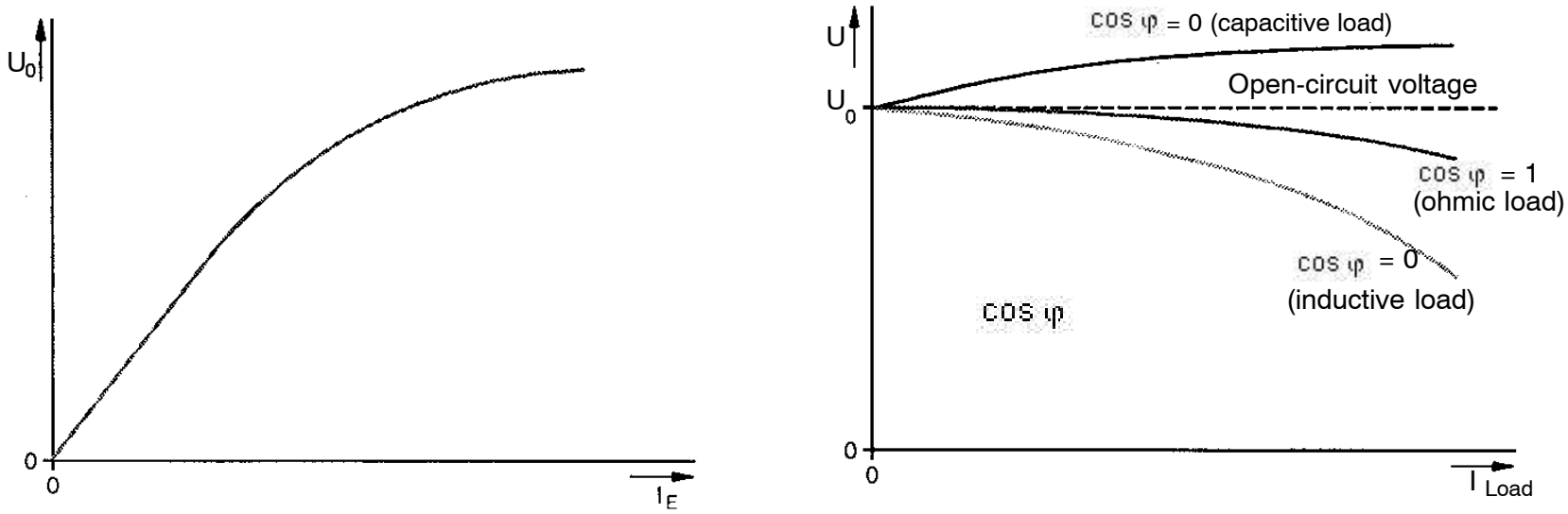

Figure 174 Operation Characteristics of AC Generators

FOR TRAINING PURPOSES ONLY!

© Lufthansa Technical Training

GENERATION OF A SINUSOIDAL VOLTAGE

Simple Generator

If a wire loop spins in a magnetic field, a sinusoidal AC voltage is induced in the wire loop. The size of the AC voltage depends on the angle of the wire loop towards the magnetic field. This voltage is tapped with slip rings.

In Generators usually a permanent a current-carrying coil rotates whilst the output windings are fixed. This is called a revolving-field machine.

Pole Pairs

If the rotating coil generates one magnetic north pole and one magnetic south pole this is called one pole pair.

It is possible to construct a machine with two pole pairs. Then the coil is split into four parts. A three-phase generator will have three of these coils.

If a generator with two pole pairs at the same rotational speed is used, the frequency will be twice as high.

There are also generators with three pole pairs.

The more pole pairs there are in a generator with the rotational speed remaining constant, the higher the frequency of the output voltage.

$$f = \frac{p \times n}{60}$$

f Frequency (1/s)

p Number of pole pairs

n rotational speed (revolution frequency f_{rev} = rpm)

Frequency and Rotational Speed

The frequency of a sinusoidal AC depends on the rotational speed of the generator.

The frequency of the output voltage increases as the generator speed increases.

If the magnetic wheel of a bipolar device (one pole pair) rotates 50 times per second, an AC with a frequency of f = 50 Hz is generated.

Voltage Regulation

At constant excitation current and isolated operation the output voltage depends on the load type.

The output voltage is regulated by adjustment of the current in the rotating coil.

In order to maintain a constant voltage, the excitation must be slightly increased in ohmic loads, in inductive loads it must be increased significantly and in capacitive loads it must only be reduced a little.

Diagram

The generation of a sinusoidal voltage can be shown easily in a vector diagram.

It is a revolving-field machine. The coil in the stator is split into two parts which are located in opposite sides.

Example

As you know, the AC generators of aeroplanes supply an AC voltage with a frequency of 400 Hz.

How many pole pairs are necessary in a generator of a B737 which is driven at 6000 rpm?

Calculate using the formula!

Result:

FOR TRAINING PURPOSES ONLY!

© Lufthansa Technical Training

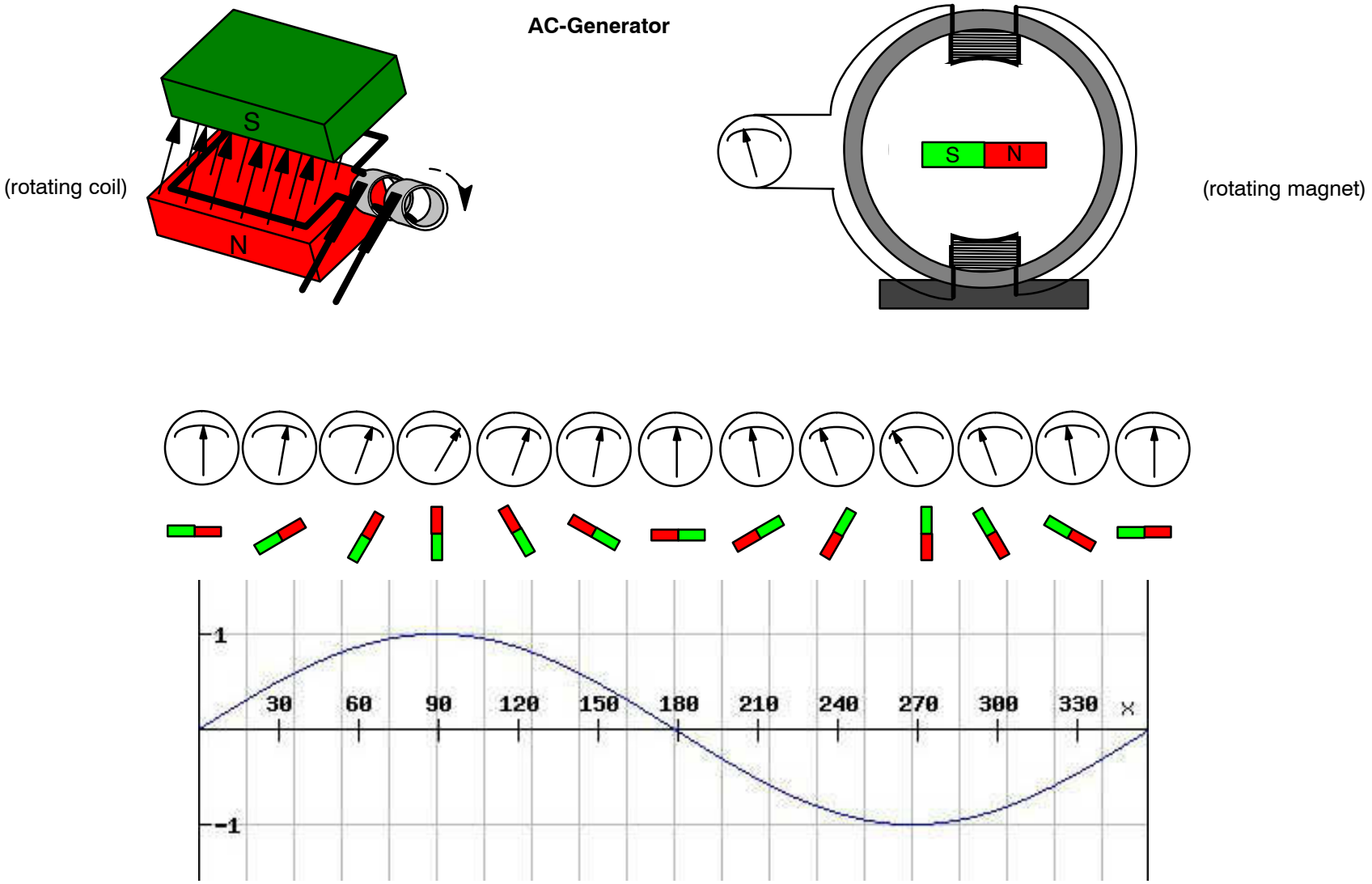

Figure 175 Generation of a Sinusoidal Voltage

FOR TRAINING PURPOSES ONLY!

© Lufthansa Technical Training

SYNCHRONOUS GENERATOR

General

Synchronous machines are used as generators and as motors.

Synchronous machines are mainly applied as generators. The generation of electricity in power plants or emergency power supplies is almost exclusively done by synchronous generators.

On power plants and emergency power supplies nearly all generators are three–phase synchronous generators.

With synchronous machines the rotor speed is equal or synchronous to the rotating field speed, i.e. they do not have a slip (s = 0).

Construction

A synchronous machine consists of a stator with a winding and a rotor which also carries a winding.

Depending on the task or the field of application, synchronous machines have different designs.

The coil in the stator is split into two parts which are located in opposite sides.

Magnetic Field

Operated as a generator, the rotating field is generated by a rotating electromagnet.

Sometimes, in small generators a permanent magnet is used instead.

Generators are mainly rotating field machines as the excitation current is lower that the output current thus making construction more convenient.

Exciter Current

The current in the rotating electromagnet is called “exciter current“.

Single Phase Alternator

With only one output a single phase system is achieved as shown in the figure.

Two Phase Alternator

In some rare cases a two-phase generator may be used. In this case the stator contains two windings with a 90 degrees displacement resulting in two identical output voltages with a 90 degrees phase shift.

FOR TRAINING PURPOSES ONLY!

© Lufthansa Technical Training

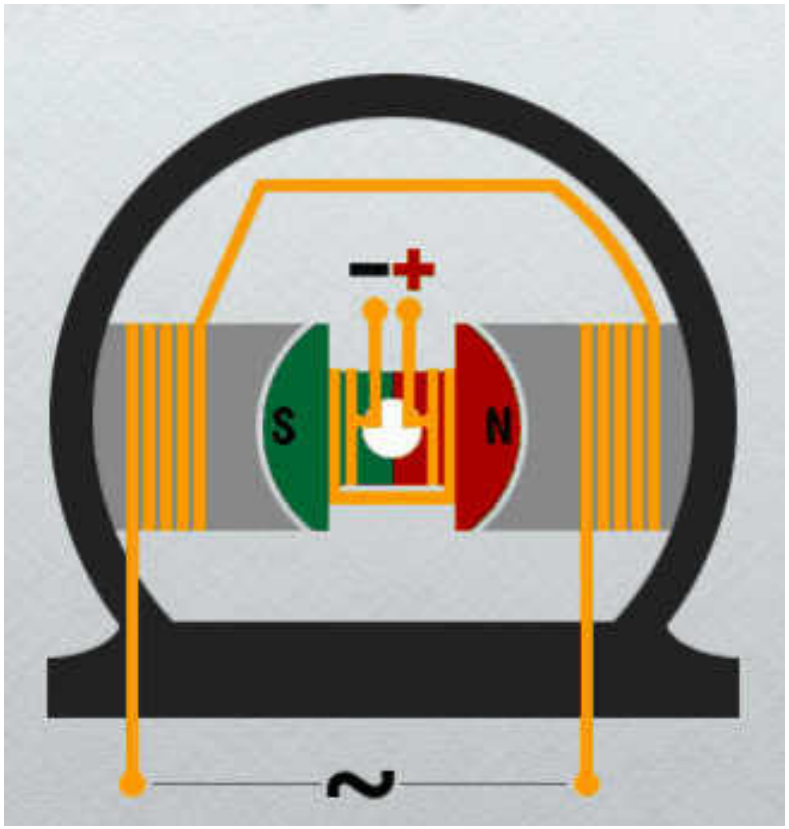

Revolving Field Machine



Stationary Field Machine

Figure 176 Synchronous Generator

FOR TRAINING PURPOSES ONLY!

© Lufthansa Technical Training

Three Phase Generator

The most common type is the three phase generator with three stator windings providing three identical output voltages with a 120 degrees phase shift. The rotor is supplied with DC via sliprings.

Star Connection

The three phase generator usually is operated in a star connection.

Then all the three phases can have different loads, line-to-ground and phase-to-phase voltages are available, with line-to-ground load currents in the neutral line can cancel out each other and also delta-connected loads can be applied.

Delta Connection

If a generator is connected in a delta arrangement only the phase-to-phase voltage is available, no neutral line is required/available.

With the higher output voltages less current would be required for the same power output but only delta connected loads can be applied.

Diagram

In a generator, the coils in the stator are split into two parts which are located in opposite sides.

The figure shows a three phase generator in a simplified form with the coils not split.

FOR TRAINING PURPOSES ONLY!

© Lufthansa Technical Training

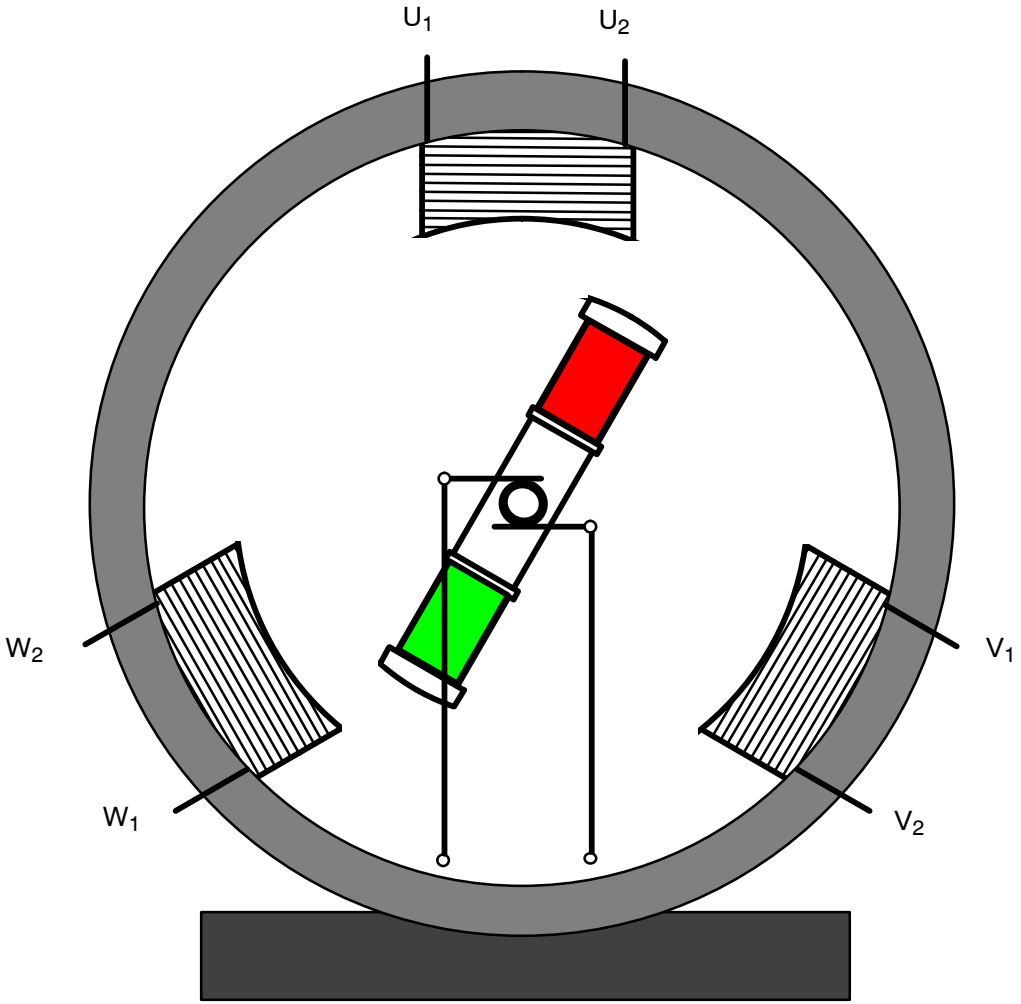

Figure 177 Synchronous Generator (3 Phases)

FOR TRAINING PURPOSES ONLY!

© Lufthansa Technical Training

PERMANENT MAGNET GENERATORS

General

Modern high−output brushless alternators are called permanent magnet generators (PMG). They were developed for the purpose of eliminating some of the problems of alternators that employ slip rings and brushes to carry exciter current to the rotating field.

In aircraft the brushless PMG has been used since many years.

Advantages

Among the advantages of a brushless alternator are the following:

- Lower maintenance cost, since there is no brush or slip−ring wear.
- High stability and consistency of output, because variations of resistance and conductivity at the brushes and slip rings are eliminated.
- Better performance at high altitudes, because arcing at the brushes is eliminated.

Construction

The PMG gets its name from the permanent magnet within the generator, which initiates the production of electric power. There are actually three separate generators within one case:

- the permanent magnet generator,
- the exciter generator, and
- the main generator.

Each of these three units is an essential part of the modern brushless alternator.

Operation of an Aircraft Generator

The brushless system induces current into the rotor using magnetic flux lines. This principle eliminates the need for the rotating contacts of slip rings and brushes.

Typically, brushless alternators use a three−phase, Y−connected armature. One terminal of each separate stator winding is connected to ground, and the other terminal of the winding is the main output terminal. For aircraft circuits requiring 115/120 V, single−phase power, the circuit is connected between one main phase and ground. For three−phase power circuits such as those for motors, all three main phases are connected to the motor.

Step by Step Explanation

1. The permanent magnet, which is connected to the rotor, is used to induce an alternating current into the stationary PMG three−phase armature winding.
2. The generator control unit (GCU) rectifies a 1200−Hz AC armature current and sends a DC voltage to the exciter field winding. This current is regulated by the control unit.
3. The exciter field induces an alternating current into the exciter armature.
4. The exciter armature is connected to the rotating rectifier, which changes the alternating current to direct current.
5. The direct current of step 4 is the current for the main generator field.
6. The main field induces an AC voltage into the main generator armature. The main generator armature is a three−phase winding that produces 120 volts across a single phase and 208 V across two phases.
7. This armature is connected to the output terminals of the generator and hence supplies the electric power for the aircraft systems.
   The GCU monitors the main generator output and in turn regulates the exciter field current as needed.

If the voltage is too low, the GCU will increase the exciter field current; this will, in turn, increase the exciter armature output and the main field current.

If the voltage is to high, the GCU will weaken the exciter field current, and the generator output will decrease.

FOR TRAINING PURPOSES ONLY!

© Lufthansa Technical Training

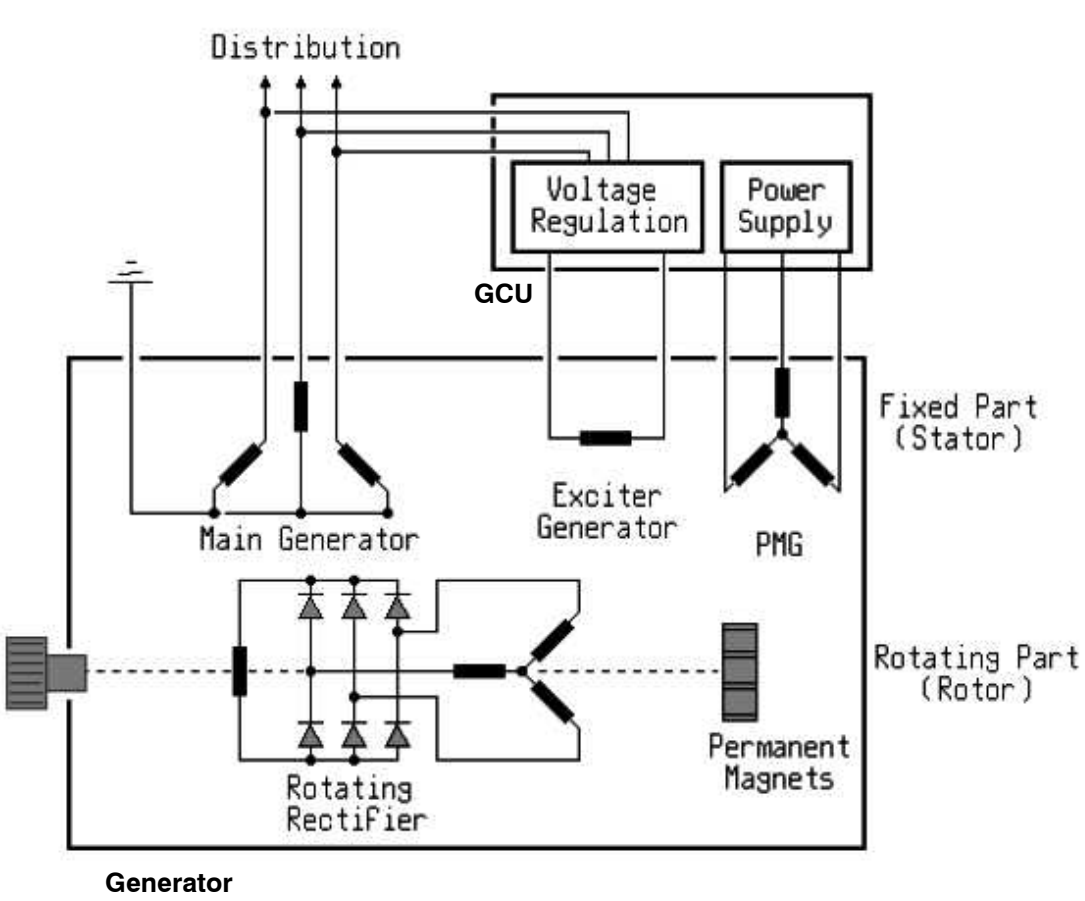

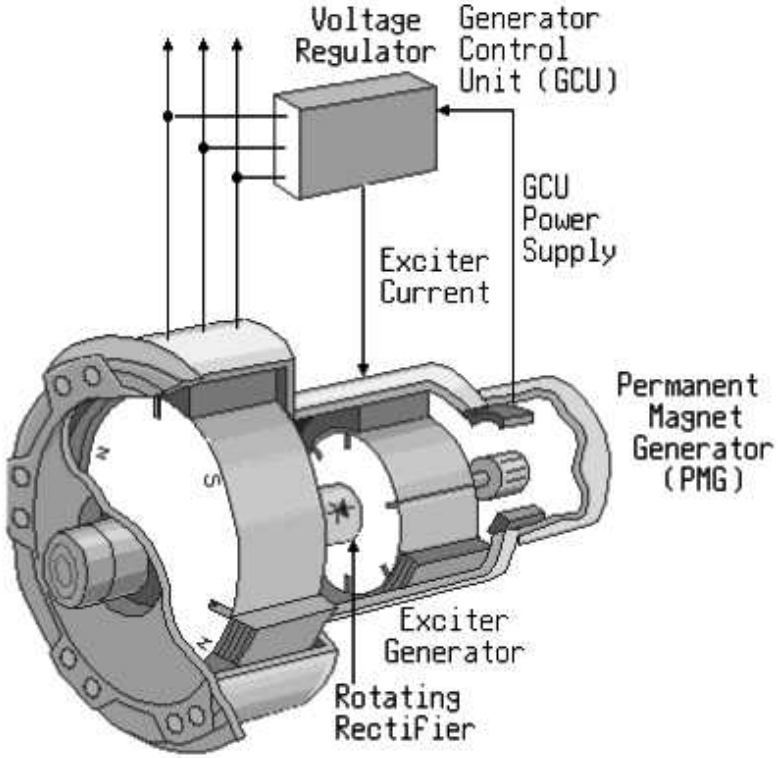

Figure 178 Aircraft PMG Synchronous Generator

FOR TRAINING PURPOSES ONLY!

© Lufthansa Technical Training

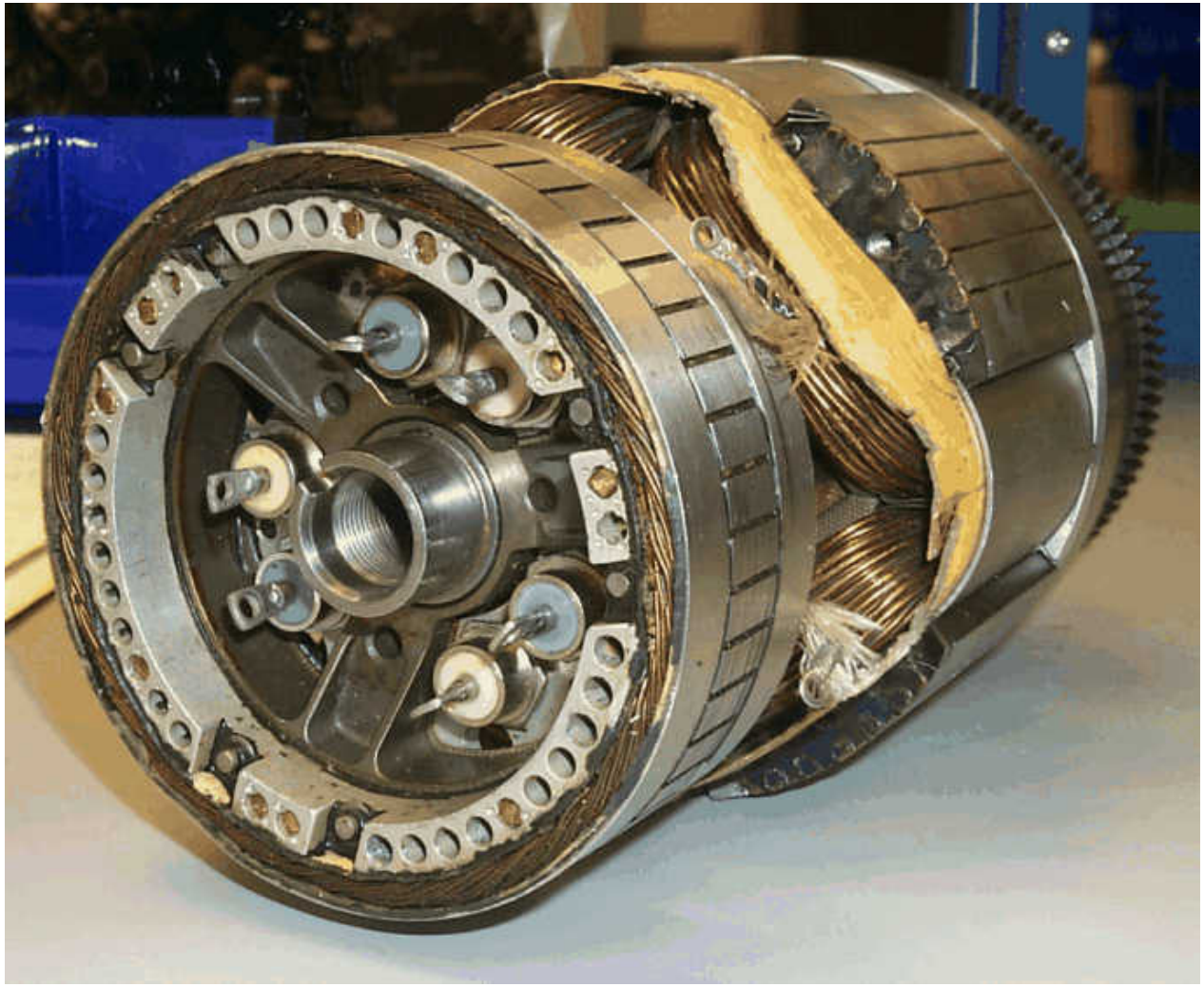

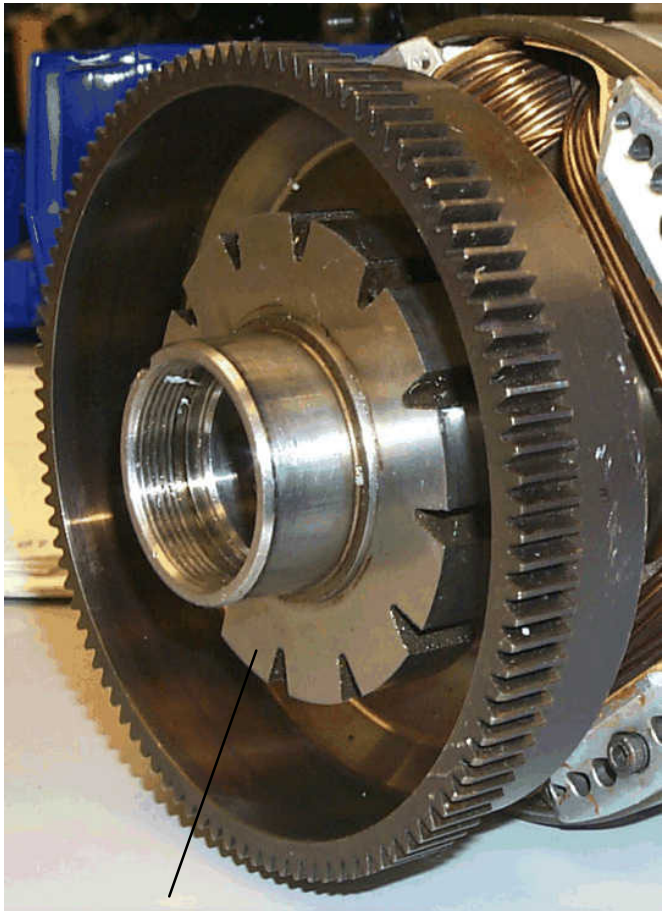

Figure 179 Rotor of an Aircraft Generator

FOR TRAINING PURPOSES ONLY!

© Lufthansa Technical Training



Exciter Generator Rotor with Rotating Rectifier



Exciter Generator Back Side

Figure 180 Exciter-Generator Rotor of an Aircraft Generator

FOR TRAINING PURPOSES ONLY!

© Lufthansa Technical Training

AC MAINS

General

For large electrical loads a bigger and more powerful generator is needed. Instead, several generators can be connected in parallel.

This will create a network with several supplying generators and various loads in different locations.

For a parallel operation of generators, some conditions must be met:

- the generators must be synchronized
- reactive power must be kept as small as possible
- real power output must be distributed equally.

Synchronization

If the energy generated by the generator is supplied to a three–phase mains, the conditions for synchronization must be met by all means.

If generators shall be connected for parallel operation, the voltage must be the same. The phasing must be the same, too.

This must be synchronized before the generators are connected.

Indicator Light

When connecting several generators to one AC bus not only the voltage must be identical but also the frequency and phase.

As an aid a light bulb is connected between the phases A of both the generators. If the bulb is dark the generators are in phase, if it is lit there is a phase shift between the generators.

Modern Connection

The indication bulb was used up to the 1960s to find out the phasing before the generator relays were actuated manually by the flight engineer.

Then automatic systems were developed. They are part of the control units.

Reactive Power

If a generator supplies an electrical grid and the excitation is too high, the voltage rises. Due to the stiff grid, however, the voltage cannot be increased.

A lagging current arises which delivers inductive reactive power. The generator acts like a capacitor on the grid. This behavior is also used in reactive power compensation.

If the excitation is too low, inductive reactive power is consumed from the electrical grid. The generator then behaves like an inductive load.

True Power

In a network, all generators should produce the same true power.

True power can be calculated by measurement of output voltage and current if the phase shift is detected and taken into the calculation.

If a generator gives less power than the others the mechanical power input must be increased. With more power to the input shaft we can try to make it run faster.

This generator will then give more true power and the others will give less true power.

The frequency will stay constant.

FOR TRAINING PURPOSES ONLY!

© Lufthansa Technical Training

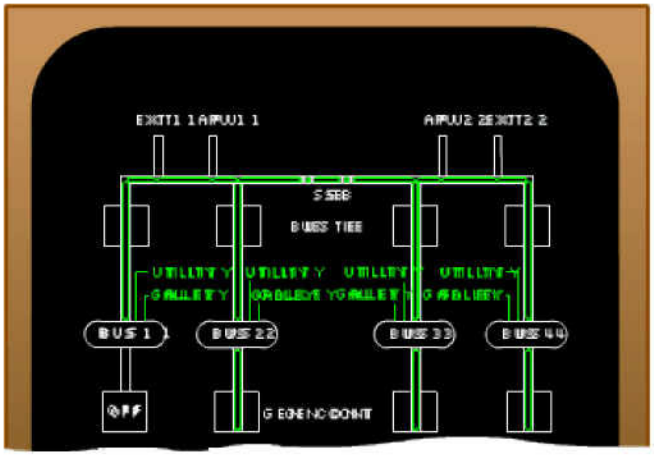

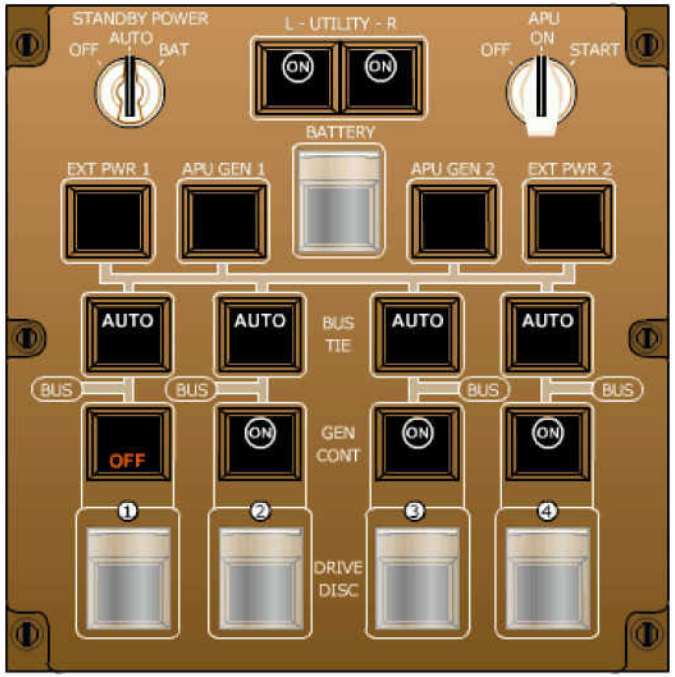

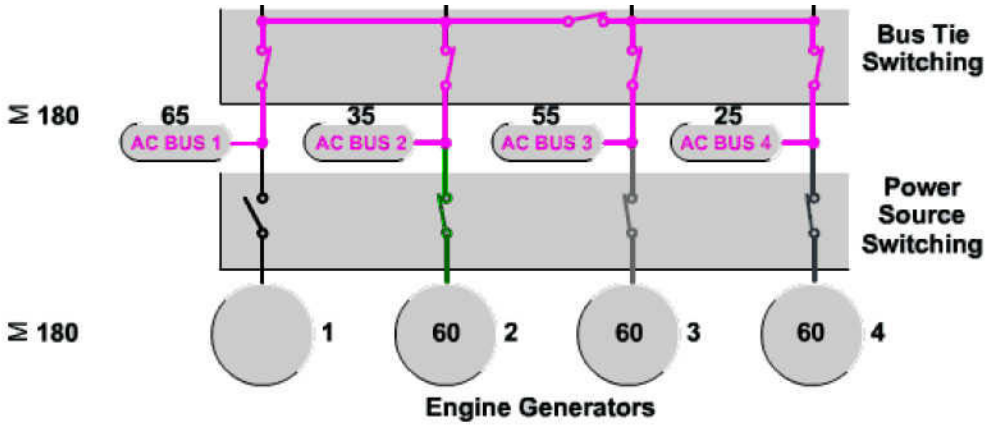

Figure 181 Generator Network

FOR TRAINING PURPOSES ONLY!

© Lufthansa Technical Training

TWO-PHASE ALTERNATOR

General

Two-phase generators nowadays are no longer used. They had been used in the old times but nowadays three-phase systems are common.

Construction

A two-phase generator consists of two single-phase generators in one housing with a common excitation field.

Phase Shift

They provide two AC voltages with a 90 degrees phase shift between the two phases.

So it provides identical voltages on both the lines in respect to ground.

Line to Line Voltage

It would also be possible to connect loads phase-to-phase. In this case the phase-to-phase voltage is the line voltage times $\sqrt{2}$.

Example

A two-phase generator provides 115 V on both the lines.

The phase-to-phase voltage is 115 V x $\sqrt{2}$ = 162.6 V.

FOR TRAINING PURPOSES ONLY!

© Lufthansa Technical Training

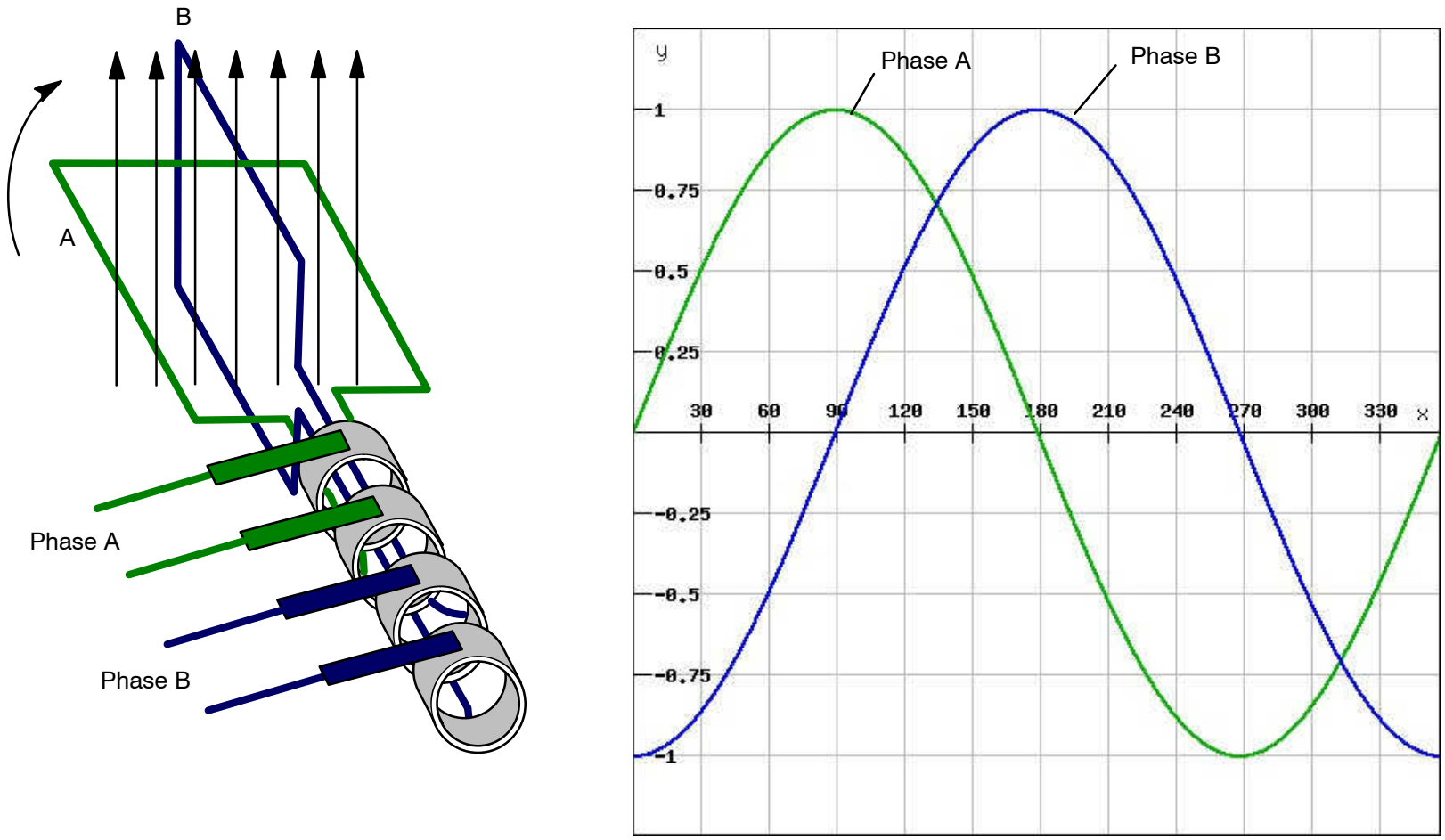

Figure 182 Two-Phase Generator Principle

FOR TRAINING PURPOSES ONLY!

© Lufthansa Technical Training

M3.18 AC MOTORS

SYNCHRONOUS MACHINE

General

Synchronous machines are used as generators and as motors.

With synchronous machines the rotor speed is equal or synchronous to the rotating field speed, i.e. they do not have a slip (s = 0).

When used as a motor, the stator windings a supplied with rotary current.

The rotor has a constant magnetic field.

Construction

A synchronous machine consists of a stator with 3 windings, supplied with AC, and a rotor which also carries a winding being supplied with DC via sliprings.

Depending on the task or the field of application, synchronous machines have different designs.

The coil in the stator is split into two parts which are located in opposite sides.

Magnetic Field

Operated as a motor, the rotating field is generated by the rotary current which is connected to the stator windings.

The rotor is an electromagnet which is supplied by jumper rings.

FOR TRAINING PURPOSES ONLY!

© Lufthansa Technical Training

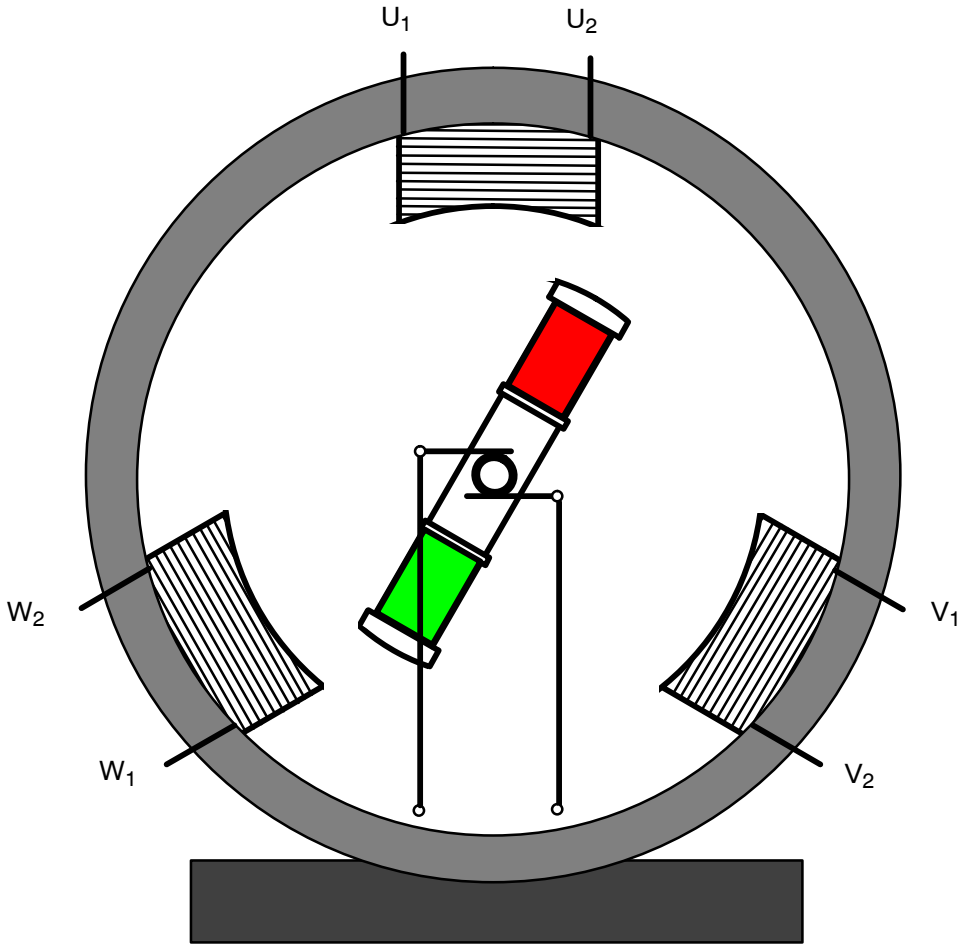

Figure 183 Synchronous Machine

FOR TRAINING PURPOSES ONLY!

© Lufthansa Technical Training

SYNCHRONOUS MOTORS

General

The synchronous motor is used to achieve a constant rotational speed.

It requires a DC current for the rotor in order to produce a constant magnetic field, like a permanent magnet.

The rotor is put into rotation by the rotating stator field, it runs at the same RPM as the stator field (synchronous).

Operation

If the stator winding of a synchronous motor is connected to the three−phase mains the rotating field of the stator instantaneously reaches the rotating field speed.

Due to the inertia, the rotor cannot instantaneously follow the rotating field when starting from a standstill. Even if the excitation is switched−on, the synchronous motor does not start by itself. It has to be warmed−up until it is near the rotating field speed (synchronous speed). Then it can bring itself to the required rotating field speed.

Another possibility is the damper winding. With a damper winding the motor starts up asynchronously and then brings itself into synchronous operation.

An overload of the synchronous motor must be avoided, because it then would operate ”out−of−step” and stop. The motor would also be thermally overloaded at standstill. A motor must only be put on load between no−load operation and breakdown torque.

Depending on the load, the rotor lags the rotating field of the stator by the load angle. If the load angle is exceeded the breakdown torque is reached and the motor stops.

Single Phase Synchronous Motors

A single phase synchronous motor construction is similar to the stationary field generator. Here a commutator is required to adjust the current direction in the rotor winding making it very similar to DC motors.

Another construction is the single Phase motor with a changing field. A permanent magnet can rotate with the same frequency as in an three-phase motor. Since there is no rotating field, the rotor must be actuated to the desired direction of rotation.

FOR TRAINING PURPOSES ONLY!

© Lufthansa Technical Training

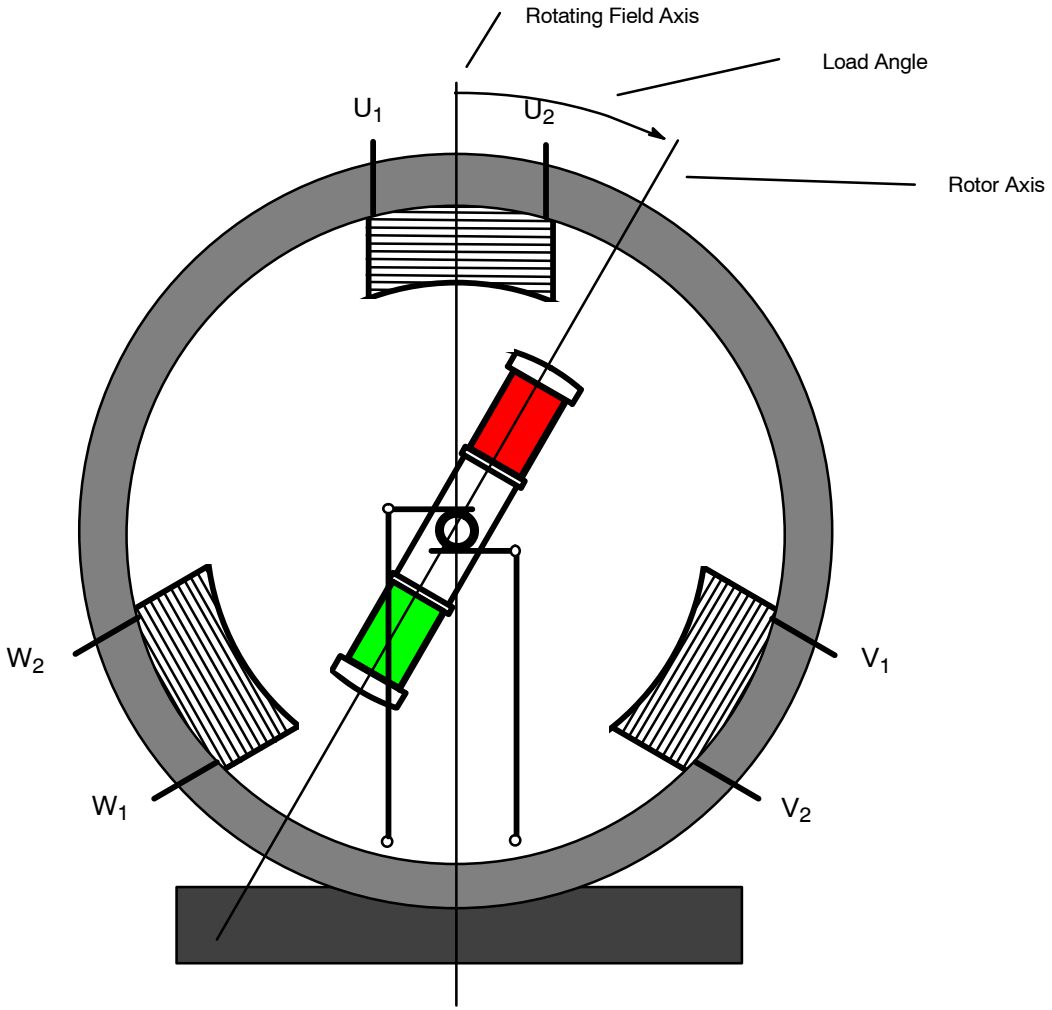

The load angle ϑ is used to measure the load

Figure 184 Load Angle of Synchronous Machines

FOR TRAINING PURPOSES ONLY!

© Lufthansa Technical Training

STARTER GENERATOR

General

Many aircraft are equipped with an auxiliary power unit (APU). This is a turbine engine which provides pneumatic power. Additionally, it drives an AC generator.

The APU is started with a motor which is supplied by the on-board battery.

In most aircraft, starter and generator are two different components. Only one of them is active at a time: either the APU is being started, but can not drive the generator with the required speed or it is running with the starter not in use.

Starter Generator of the B737 NG

In Boeing 737 NG the APU uses a three phase Startergenerator. It runs as a motor in order to start up the APU and as a generator in order to provide electrical power when the APU runs.

In Motor mode the SPU (Start Power Unit) converts 24V Battery voltage to 270V DC. The SCU (Start Converter Unit) converts it to 115 V 3~ which is applied to the Main Generator Stator.

The Stator of the Exciter Generator is supplied with 500 V AC (Peak) from the SCU. This causes induction in the Exciter Generator Rotor windings. The voltage induced is rectified by the rotating diodes and connected to the Main Generator Rotor. The Rotor of the Main Generator has a constant magnetic field with North- and South-Pole. The rotating field of the Main Generator Stator then makes the rotor turn, the APU starts up.

FOR TRAINING PURPOSES ONLY!

© Lufthansa Technical Training

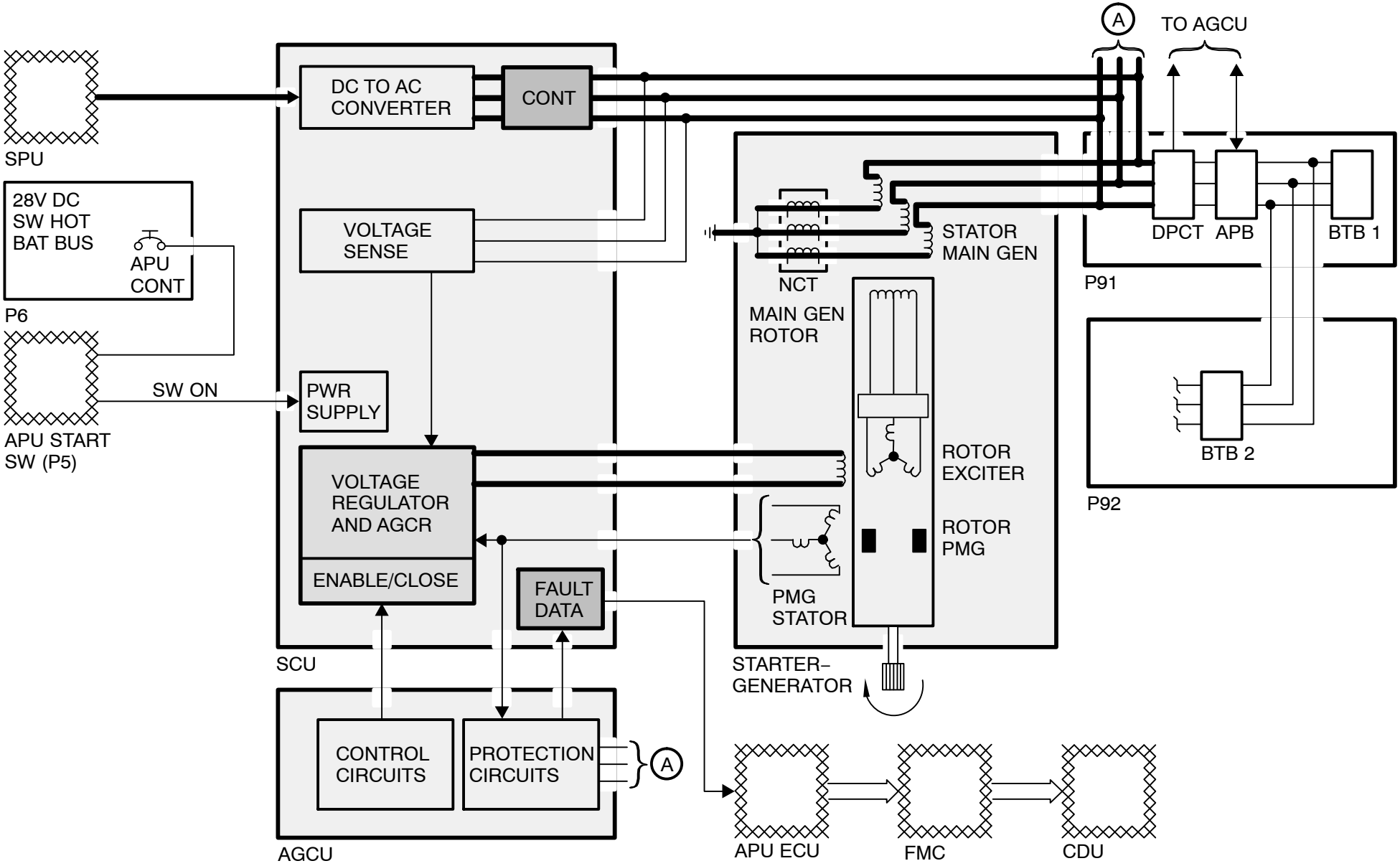

Figure 185 B737 NG APU Starter Generator

FOR TRAINING PURPOSES ONLY!

© Lufthansa Technical Training

THREE–PHASE ASYNCHRONOUS MOTOR

General

Asynchronous motors are the most important three–phase motors. They are reliable, require a minimum level of maintenance and the manufacturing costs are low.

The optimal operating behavior is reached at rated load. The motor has a high efficiency and a high power factor.

Purpose

They are used as drives for small and medium power machines e.g. machine tools, fuel pumps and hydraulic pumps.

In aeroplanes this type of motor can often be found.

Construction

The motor consists of two major parts, the stator (stationary part) and the rotor (rotating part).

The fixed part of the three-phase asynchronous motor is known as the stator. The stator consists of a housing and a laminated core with slots in which the three–phase windings are laid (see figure). The winding is composed of three coils. These coils are each displaced by angles of 120°. The winding terminals are lead to the terminal board in the connection box.

The rotor as well as the stator consists of a laminated core with slots. In these slots aluminium or copper rotor bars are laid or forced by high–pressure aluminium die casting. The ends of the rotor bars are connected to each other by end rings.

Rotor bars and end rings together form a so–called squirrel cage and represent the rotor winding. The figure shows a rotor. The slant arrangement of the bars ensures an even running.

Fan blades are often attached to the end rings for motor cooling. The drive shaft is located in the centre of the rotor.

Operation

The rotor of an asynchronous motor doesn’t require a power supply.

The current inside the rotor windings is supplied from the rotating magnetic field of the stator.

At start-up the stators magnetic field rotates while the rotor is stationary. This will cause a change of the magnetic field around the rotor, its bars cut the lines of force causing induction in the rotor.

The closer the rotor speed gets to the speed of the rotating stator magnetic field the lower the induction will be resulting in loss of torque.

If the torque supplied and the friction of the bearings are equal the maximum rotational speed is reached.

If a load is applied a higher torque would be required. As this can only be achieved by an increase of induction the rotor speed will decrease. The higher the load the lower the rotational speed will be but can never exceed the speed of the rotating magnet field.

The rotational speed of such a motor depends on the frequency of the supply voltage and the amount of pole pairs.

Rotational Direction Change

The rotational direction can be reversed by interchanging two of the three stator phases.

This will revert the rotational direction of the magnetic field resulting in reversed rotational direction.

FOR TRAINING PURPOSES ONLY!

© Lufthansa Technical Training

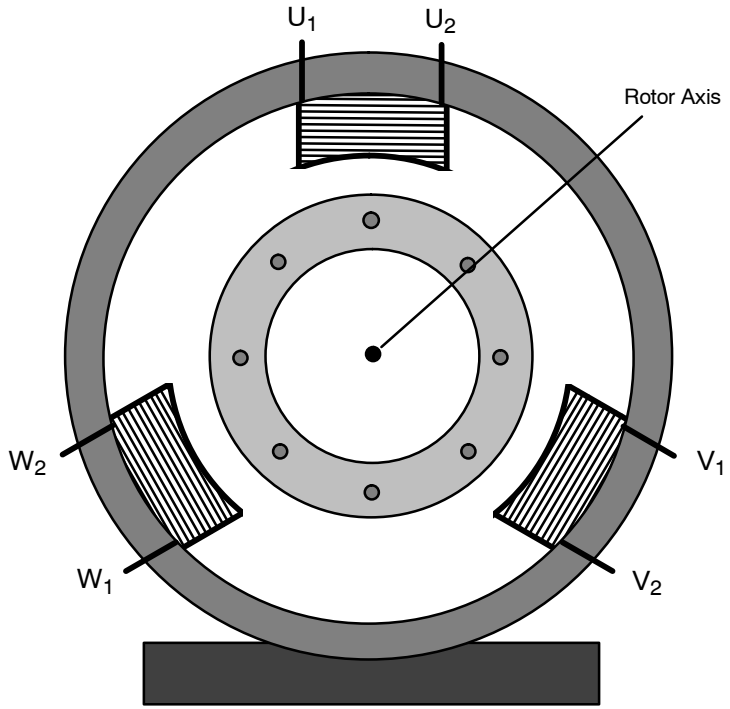

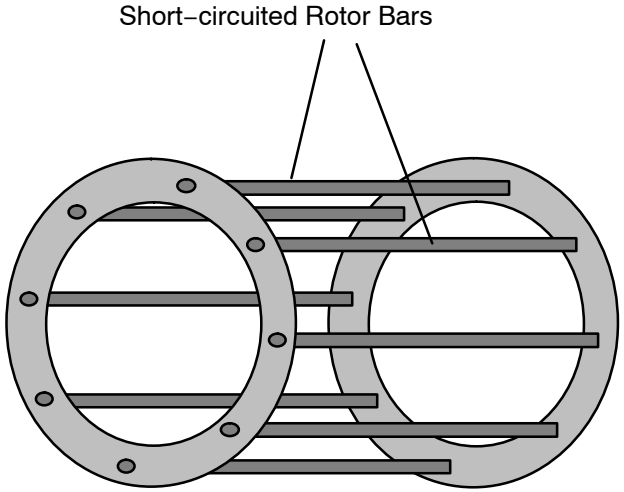

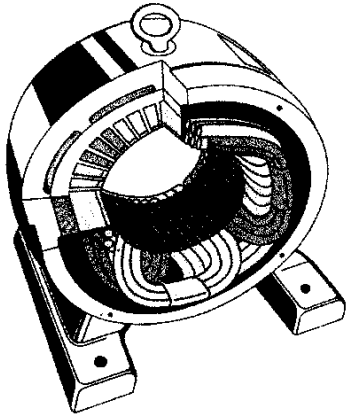

Stator

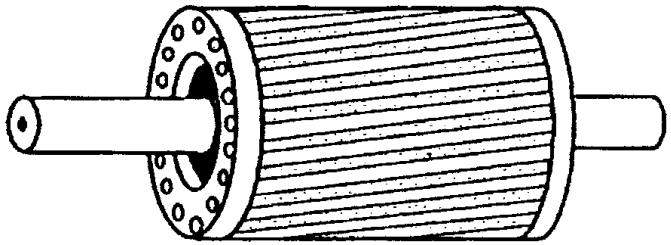

Rotor

Figure 186 Asynchronous Motors

FOR TRAINING PURPOSES ONLY!

© Lufthansa Technical Training

Rotating Field Speed

On connecting the motor windings to the three−phase mains, a rotating field is established in the stator. This field rotates at synchronous speed or also called the rotating field speed n_0.

Example: 50 Hz = 50 r/second x 60 = 3000 rpm

Number of Pole Pairs

The number of pole pairs (p) is known as the number of pole pairs of the south and north poles per phase depending on the stator winding's design.

Example: A motor with 2 pole pairs = 1500 rpm

Operation

As a simple explanation an example is given. A pole pair N1 and S1 has a field Φ_1 that fills air gap and rotor.

When the field is rotated, its flux lines will be crossed by the wires of the rotor winding. In these wires a voltage will be induced. As a result, currents flow if it is a closed winding (remember that the wires are connected by end rings at both ends). The direction of current flow can be determined by the right−hand rule.

Direction of Rotation

The current−carrying rotor winding produces a magnetic field Φ_2. According to the corkscrew rule, it has the position as shown on the picture and builds up the poles N_2 S_2 in the rotor.

These poles will repel from the like poles of the rotating field and will be attracted by the unlike poles.

As a result the rotor and rotating field rotate in the same direction.

Rotation Speed

If the rotor would have the same rotational speed as the rotating field, there would be no difference in the rotational speed. Therefore the wires of the rotor winding would not cut the flux lines. Thus the rotor voltage and rotor current would be zero. As a result the rotor would also have no torque and the rotational speed would be reduced. As soon as the speed decreases the rotor would lag the rotating field and thus flux lines are cut and a torque can be produced.

The rotational speed of the rotor is always lower than the rotational speed of the rotating field.

Slip

The lagging of the rotor is called slip. The higher the required torque is, i.e. the load of the motor, the higher the slip must be. At full load the slip is approximately 5 %. At idle speed the motor has only little internal losses to overcome which is possible with only a low torque. A low torque can already be achieved with a low slip (below 1 %).

The rotational speed of the rotor decreases with increasing load and increases with decreasing load but does not reach the synchronous speed.

The slip can be calculated from the rotational speed n_1 of the rotating field and the rotational speed n_2 of the rotor.

FOR TRAINING PURPOSES ONLY!

© Lufthansa Technical Training

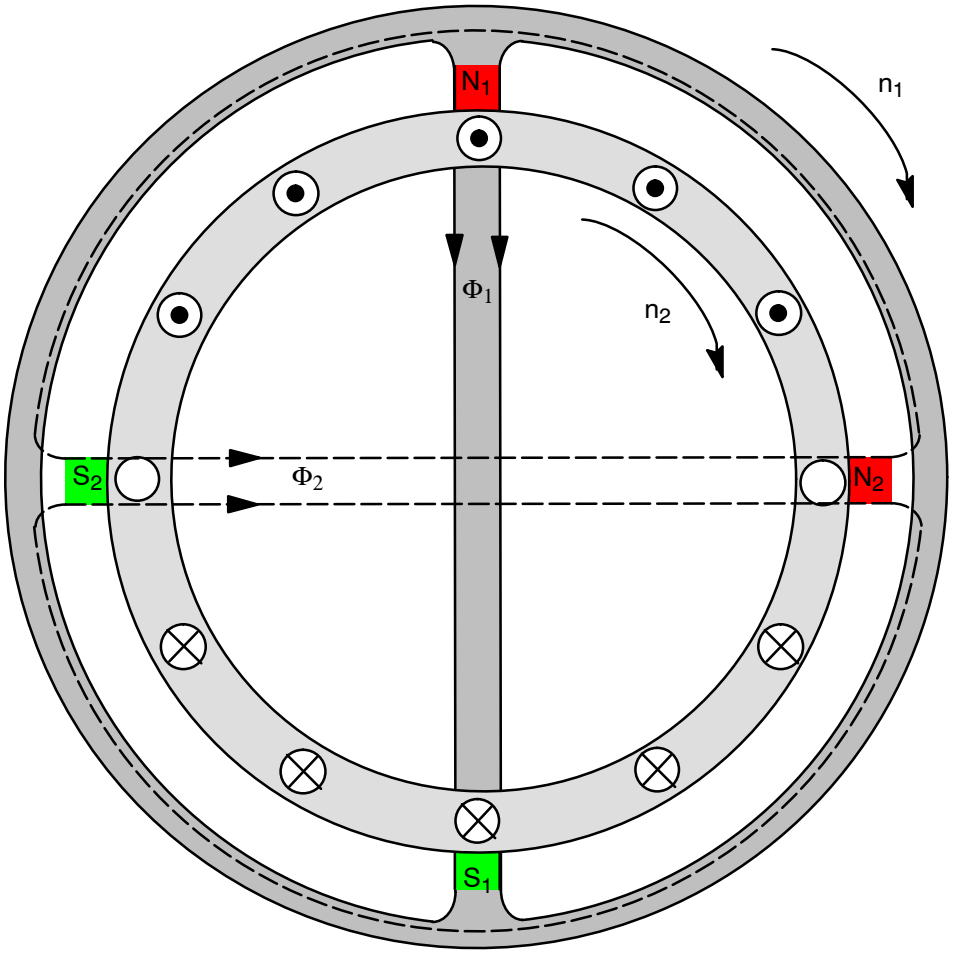

Figure 187 Magnetic Fields in Asynchronous Motors

FOR TRAINING PURPOSES ONLY!

© Lufthansa Technical Training

SHADED OR SPLIT POLE MOTOR

General

A shaded−pole motor is so named because it uses a small shorted „Shading Coil“ wound in a small notch in the stator pole piece. In some motors this coil consists of a single copper ring or copper band.

An other name is “split pole motor“.

Operation

When the electromagnetic field builds up around the main coil, the flux cuts across the conductors of the shading coil.

Since the shading coil is shorted, current flows which produces a field opposite that of main field. The main field is then strongest on the side away from the shading coil.

However, the field through the shading coil reaches maximum intensity much later – at a time when the main field is already decreasing. The electromagnetic field in the pole piece then appears to be stronger on the side nearest (or through) the shading coil.

This produces a sweeping motion from side to side in the stator pole piece, although small, this motion is enough to maintain an induced voltage in the rotor and start the rotor turning.

FOR TRAINING PURPOSES ONLY!

© Lufthansa Technical Training

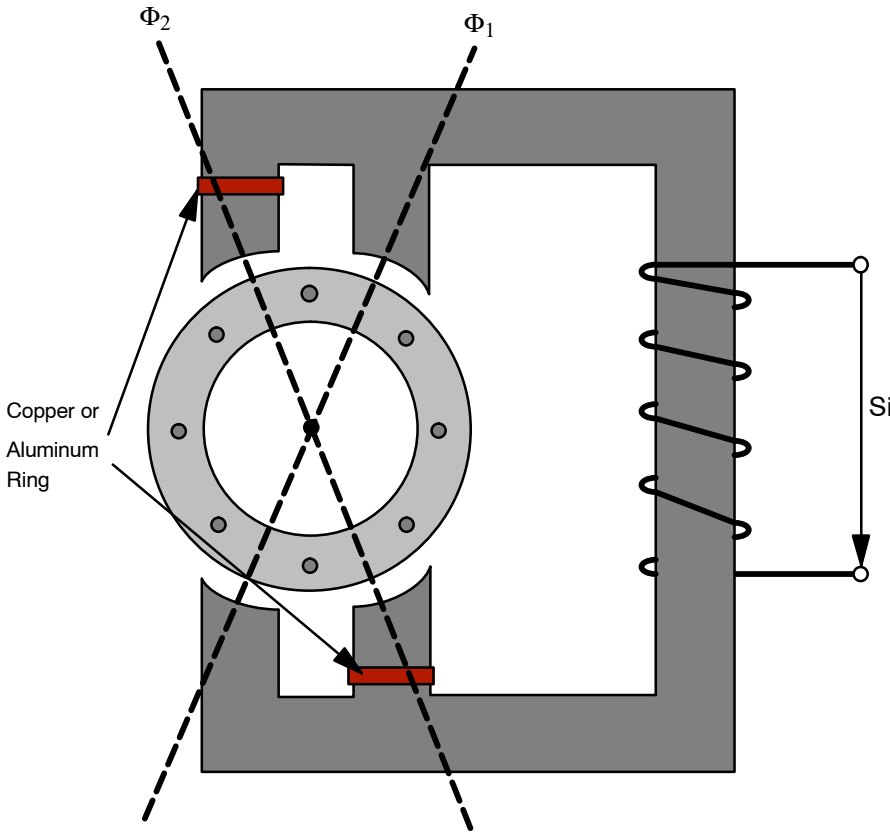

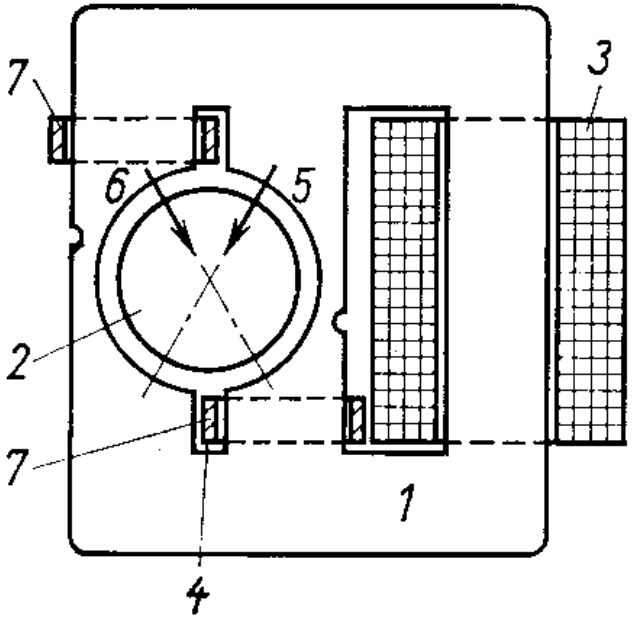

1 Stator Iron
2 Short-circuited Rotor
3 Main Winding
4 Gap
5 Main Pole
6 Shaded Pole
7 Shaded Pole Winding

Figure 188 Split Pole Motor

FOR TRAINING PURPOSES ONLY!

© Lufthansa Technical Training

CAPACITOR MOTORS

General

The capacitor motor is designed according to the same principle as the three–phase asynchronous motor with squirrel–cage rotor. The capacitor motor is used where there is no three–phase mains and electrical drives outputs of 1.5 kW are required.

It is also referred to as single–phase AC motor with capacitor or induction motor. Single–phase AC voltage is required by washing machines, dishwashers, cooling units, heaters, power tools, office machines etc.

Construction

The single–phase AC motor with only one winding (see figure 1) cannot start by itself because the single–phase AC voltage only generates one changing magnetic field.

Self–starting is achieved by dividing the stator winding into two phase windings, which are separated from each other by 90°. In this way we obtain a primary winding and an auxiliary winding. The current between primary winding and auxiliary winding also has to be out of phase by 90°.

Second Phase

That is why a two–phase AC voltage would be required. However, in practice there is no two–phase AC voltage. That is why the phase–shifted voltage has to be generated from the single–phase mains. For this purpose, the primary winding is connected to the mains and a capacitor (running capacitor CB) is connected in series with an auxiliary winding (see figure 2).

Thus auxiliary current and principal current are out of phase by 90°.

Connectors

The terminals of the primary winding are referred to as U1 and U2, the terminals of the auxiliary winding Z1 and Z2.

Starting Capacitor

If the motor must have a high starting torque, a second capacitor (starting capacitor C_A) is connected in parallel to the running capacitor during the start–up. The schematic shows the connection of the AC motor with the running capacitor and the starting capacitor.

The capacity of the starting capacitor is always chosen bigger than the capacity of the running capacitor. The dimensioning of the capacitors is based on experience and depends on the starting torque and the capacitor voltage. The values could be C_B = 10 µF and C_A = 14 µF as an example.

Centrifugal Switch

The starting capacitor has a higher capacity. Thus a current that is too high flows across the auxiliary winding and the motor heats up too much. After the acceleration, the starting capacitor is therefore switched off using a centrifugal switch. The centrifugal switch is normally set in such a way that it switches the capacitor off at 70...80 % of the rated speed.

The schematic shows that there is an alternative to the centrifugal switch. The capacitor motor can also be fitted with a klixon–switch. The current of the motor's primary winding flows across the magnet coil. To avoid a loss of power in the motor, the coil only has few turns with a large wire cross–section. Only a very low voltage may drop across the coil itself. As the starting current is a multiple of the operational current, the relay picks up immediately if the motor is switched on. The relay remains picked up until the motor nearly reaches its rated speed. At that time the starting current decreases to the value of the operational current, and the relay drops out. The auxiliary winding of the motor is switched off via the relay contact.

Second Phase by Inductor

An other option to create a rotating magnetic field is an inductor. In this case it would replace the capacitor. As inductors create phase shifts between voltage and current.

So again a rotation magnetic field is provided but with opposite rotational direction than a capacitor will provide.

FOR TRAINING PURPOSES ONLY!

© Lufthansa Technical Training

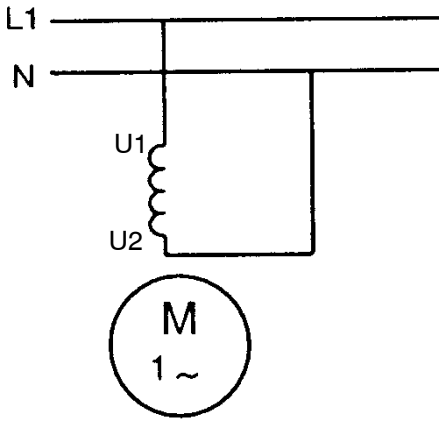

Figure 1

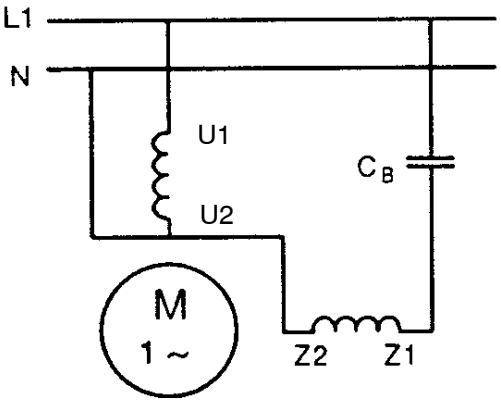

Figure 2

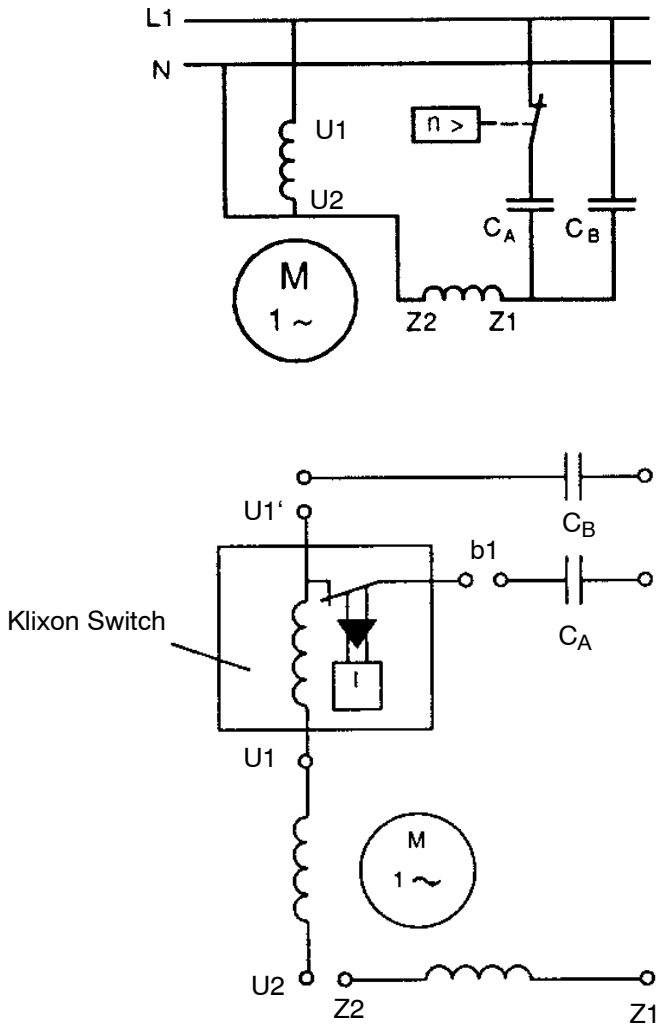

Figure 189 Capacitor Motor

FOR TRAINING PURPOSES ONLY!

TABLE OF CONTENTS

M3 ELECTRICAL FUNDAMENTALS 1

M3.1 ELECTRON THEORY 2

STRUCTURE AND DISTRIBUTION OF ELECTRICAL CHARGES 2
ATOMS 2
SHELL MODEL 4
BAND THEORY 4
DISTRIBUTION OF CHARGES WITHIN AN ATOM 6
IONS 8
MOLECULES 10
COMPOUNDS 10

MOLECULAR STRUCTURE OF CONDUCTORS, SEMICONDUCTORS AND INSULATORS 12
CONDUCTORS 12
INSULATORS/NON – CONDUCTORS 12
SEMICONDUCTORS 12

M3.2 STATIC ELECTRICITY AND CONDUCTION . 14

ELECTROSTATIC LAWS OF ATTRACTION AND REPULSION 14
STATIC ELECTRICITY 14
ELECTROSTATIC LAWS 14

UNITS OF CHARGE, COULOMB'S LAW 16
ELECTRICAL CHARGE 16
COULOMB'S LAW 18

M3.3 ELECTRICAL TERMINOLOGY 20

ELECTRICAL TERMS, THEIR UNITS AND FACTORS AFFECTING THEM 20
ELECTRIC CURRENT 20
THE CHARACTER OF ELECTRICAL CURRENT CONDUCTION 24

M3.2 STATIC ELECTRICITY AND CONDUCTION . 26

CONDUCTION OF ELECTRICITY IN SOLIDS, LIQUIDS, GASES AND A VACUUM 26
CURRENT CONDUCTION 26
CURRENT DENSITY IN A WIRE 30

M3.3 ELECTRICAL TERMINOLOGY 32

ELECTRICAL TERMS, THEIR UNITS AND FACTORS AFFECTING THEM 32
VOLTAGE 32
CONVENTIONAL CURRENT FLOW AND ELECTRON FLOW 34

M3.4 GENERATION OF ELECTRICITY 36

PRODUCTION OF ELECTRICITY BY THE FOLLOWING METHODS: 36
FRICTION 36
INFLUENCE 38
PRESSURE 40
HEAT 42

M3.5 DC SOURCES OF ELECTRICITY 44
THERMOCOUPLE 44

M3.4 GENERATION OF ELECTRICITY 46
LIGHT 46

M3.5 DC SOURCES OF ELECTRICITY 48

OPERATION OF PHOTO-CELLS 48

M3.4 GENERATION OF ELECTRICITY 50
CHEMICAL REACTION 50

M3.5 DC SOURCES OF ELECTRICITY 52

CONSTRUCTION AND BASIC CHEMICAL ACTION OF: 52
GALVANIC CELLS 52
PRIMARY CELLS 52
SECONDARY CELLS 54

TABLE OF CONTENTS

OTHER GALVANIC CELLS, ROUND CELLS AND FLAT CELLS 58

M3.4 GENERATION OF ELECTRICITY 60

MAGNETISM 60

M3.3 ELECTRICAL TERMINOLOGY 62

THE FOLLOWING TERMS, THEIR UNITS AND FACTORS AFFECTING THEM: 62

RESISTANCE 62

CONDUCTANCE 64

M3.6 DC CIRCUITS 66

OHMS LAW 66

ELECTRIC CIRCUIT 66

OHMS LAW 66

CALCULATIONS USING THE ABOVE LAWS 68

M3.7 RESISTANCE / RESISTOR 70

RESISTANCE AND AFFECTING FACTORS 70

AFFECTING FACTORS 70

SPECIFIC RESISTANCE 72

RESISTOR COLOUR CODE, VALUES AND TOLERANCES, PREFERRED VALUES, WATTAGE RATINGS 74

RESISTORS 74

RANGES AND TOLERANCES 76

WATTAGE RATINGS 78

FIXED RESISTORS: METHODS OF CONSTRUCTION 80

METHODS OF CONSTRUCTION 80

CONSTRUCTION OF POTENTIOMETERS AND RHEOSTATS 82

POTENTIOMETERS AND RHEOSTATS 82

VOLTAGE–DEPENDENT RESISTORS 84

THERMISTORS 86

TEMPERATURE-DEPENDANT RESISTORS 86

RESISTORS IN SERIES AND PARALLEL 94

RESISTORS IN SERIES 94

RESISTORS IN PARALLEL 96

MIXED CIRCUITS 98

M3.6 DC CIRCUITS 100

KIRCHHOFF'S CURRENT LAW 100

KIRCHHOFF'S VOLTAGE LAW 104

M3.7 RESISTANCE / RESISTOR 108

WHEATSTONE BRIDGE 108

M3.5 DC SOURCES OF ELECTRICITY 110

INTERNAL RESISTANCE 110

POWER SOURCES IN PARALLEL 114

POWER SOURCES IN SERIES 116

M3.8 POWER 118

ELECTRICAL POWER 118

POWER DISTRIBUTION 120

ELECTRICAL EFFICIENCY 124

ENERGY 126

ELECTRICAL WORK 127

M3.9 CAPACITANCE / CAPACITOR 128

THE ELECTRIC FIELD 128

CAPACITORS 130

FACTORS AFFECTING CAPACITANCE 132

THE DIELECTRIC 134

CAPACITOR CONSTRUCTION 136

TYPES OF CAPACITORS 138

COLOUR CODING 142

CAPACITORS IN PARALLEL AND IN SERIES 146

TABLE OF CONTENTS

CHARGING/DISCHARGING OF CAPACITORS 148
CAPACITOR TESTING 152

M3.10 MAGNETISM 154

PROPERTIES OF PERMANENT MAGNETS 154
MAGNET IN THE EARTH'S MAGNETIC FIELD 156
THEORY OF MAGNETISM 158
TYPES OF MAGNETIC MATERIAL 160
MAGNETIZATION 162
DEMAGNETIZATION 164
HANDLING AND STORING 166
MAGNETIC SHIELDING 168
APPLICATION EXAMPLES 170
ELECTRIC CURRENT AND MAGNETIC FIELDS 172
SUMMATION OF MAGNETIC FIELDS 174
MAGNETOMOTIVE FORCE 176
MAGNETIC FIELD STRENGTH 178
PERMEABILITY 180
MAGNETIC FLUX DENSITY 182
MAGNETIC FLUX 184
ELECTROMAGNET 186
SATURATION POINT 188
MAGNETICABILITY OF MATERIALS 190

M3.11 INDUCTANCE/INDUCTOR 192

INDUCTION OF MOTION 192
LENZ'S LAW AND POLARITY 194
COILS 196
MUTUAL INDUCTION 198
CURRENT TRANSFORMER CT 200
POSITION OF COILS 202
SELF–INDUCTION 204

M3.13 AC THEORY 206

INTRODUCTION 206
PERIOD 206
FREQUENCY 208
WAVELENGTH 208
AVERAGE VALUE 210
PEAK VALUE 210
INSTANTANEOUS VALUE 210
PEAK–TO–PEAK VALUE 212
ROOT MEAN SQUARE VALUE 214
NON SINUSODIAL AC VOLTAGES AND CURRENTS 216
GENERATION OF A SINUSODIAL VOLTAGE 220
3–PHASE SYSTEMS 226
PROPERTIES OF THREE-PHASE SYSTEMS 228

M3.14 RESISTIVE (R), CAPACITIVE (C) AND INDUCTIVE (L) CIRCUITS 230

PHASE SHIFT 230
OHMIC RESISTANCE 234
INDUCTIVE REACTANCE 236
CAPACITIVE REACTANCE 240
INFLUENCE OF THE FREQUENCY ON THE REACTANCE 244
IMPEDANCE 246
CIRCUITS WITH AC RESISTORS 248
RESISTOR, COIL AND CAPACITOR IN SERIES 260
RESISTOR, COIL AND CAPACITOR IN PARALLEL .. 262
TRUE POWER 264

TABLE OF CONTENTS

REACTIVE POWER 266
APPARENT POWER 270
POWER FACTOR 272
CALCULATION OF POWER 274
WORK IN AC CIRCUITS 276

M3.16 FILTERS 278

GENERAL 278
SERIES RESONANCE 278
PARALLEL RESONANCE 286
TWO–PORT NETWORKS 292
PASS FILTERS 294
BAND-PASS FILTER AND BAND-STOP FILTER 300

M3.15 TRANSFORMERS 302

CONSTRUCTION AND MODE OF OPERATION 302
SHAPES OF TRANSFORMERS 304
LOAD CONDITIONS 306
TRANSFORMATION RATIO 310
LOSSES 312
POWER TRANSFER 314
SHORT CIRCUIT VOLTAGE 316
AUTO–TRANSFORMERS 318
CURRENT TRANSFORMERS 320
THREE-PHASE TRANSFORMERS 324

M3.12 DC MOTOR/GENERATOR THEORY 326

GENERAL 326
BASICS 328
CONSTRUCTION OF DC MACHINES 330
COMPONENTS 332
CONSTRUCTION STANDARD 334
FIELDS OF A DC MACHINE 336
COMMUTATING POLES AND COMPENSATING WINDING 338
SPEED CONTROL OF DC MACHINES 340
ROTATING DIRECTION OF DC MACHINES 342
SHUNT–WOUND DC MACHINES 344
SERIES–WOUND DC MACHINES 348
STARTER GENERATOR 350
COMPOUND DC MACHINES 352
UNIVERSAL MOTORS 356
ALTERNATOR 358

M3.17 AC GENERATORS 360

THREE–PHASE GENERATOR 360
GENERATION OF A SINUSOIDAL VOLTAGE 362
SYNCHRONOUS GENERATOR 364
PERMANENT MAGNET GENERATORS 368
AC MAINS 372
TWO-PHASE ALTERNATOR 374

M3.18 AC MOTORS 376

SYNCHRONOUS MACHINE 376
SYNCHRONOUS MOTORS 378
STARTER GENERATOR 380
THREE–PHASE ASYNCHRONOUS MOTOR 382
SHADED OR SPLIT POLE MOTOR 386
CAPACITOR MOTORS 388

TABLE OF FIGURES

Figure 1 Composition of Atoms . . . 3
Figure 2 Shell Model and Band Theory . . . 5
Figure 3 Distribution of Charges within an Atom . . . 7
Figure 4 Ion . . . 9
Figure 5 Chemical Compound . . . 11
Figure 6 Molecular Structure of Conductors and Semiconductors . . . 13
Figure 7 Electrostatic Laws . . . 15
Figure 8 Electrically Charged Body . . . 17
Figure 9 Electrically Charged Bodies . . . 19
Figure 10 Metering Current . . . 21
Figure 11 Effects of Electrical Current . . . 23
Figure 12 Valence Band and Conduction Band . . . 25
Figure 13 Current in Metals and Fluids . . . 27
Figure 14 Current in Gases and Vacuum . . . 29
Figure 15 Current Density . . . 31
Figure 16 Voltage Levels and Kinds of Voltage . . . 33
Figure 17 Direction of Voltage and Current . . . 35
Figure 18 Triboelectric Series . . . 37
Figure 19 Electrostatic Charging . . . 39
Figure 20 Construction of Piezo Crystals . . . 41
Figure 21 Voltage Generation by Heat . . . 43
Figure 22 Thermocouple . . . 45
Figure 23 Construction of Solar Cells . . . 47
Figure 24 Operation of a Photo Cell . . . 49
Figure 25 Electrochemical Series . . . 51
Figure 26 Zinc-Carbon Battery . . . 53
Figure 27 Lead Battery . . . 55
Figure 28 Aircraft Battery (Nickel-Cadmium) . . . 57
Figure 29 Mercury Oxide Coin Cell . . . 59
Figure 30 Generator Principle . . . 61
Figure 31 Resistance . . . 63
Figure 32 Conductance . . . 65
Figure 33 Electric Circuit . . . 67
Figure 34 Electric Circuit . . . 69
Figure 35 Resistance of a Lead . . . 71
Figure 36 Specific Resistance . . . 73
Figure 37 Shapes of Resistors . . . 75
Figure 38 Tolerances of Resistors . . . 77
Figure 39 Shapes of Resistors . . . 79
Figure 40 Shapes of Resistors . . . 81
Figure 41 Potentiometers and Rheostats . . . 83
Figure 42 VDR . . . 85
Figure 43 Characteristic Curve and Shapes of NTC . . . 87
Figure 44 Usage of NTC . . . 89
Figure 45 Characteristic Curve and Shapes of PTC . . . 91
Figure 46 PTC as TAT-Probe . . . 93
Figure 47 Resistors in Series . . . 95
Figure 48 Resistors in Parallel . . . 97
Figure 49 Examples of Mixed Circuits . . . 99
Figure 50 Kirchhoff's Current Law . . . 101
Figure 51 Kirchhoff's Current Law . . . 103
Figure 52 Kirchhoff's Voltage Law . . . 105
Figure 53 Kirchhoff's Voltage Law . . . 107
Figure 54 Wheatstone Bridge . . . 109
Figure 55 Internal Resistance of Voltage Sources . . . 111
Figure 56 Internal Resistance and Resistance of Conducting Wires . . . 113
Figure 57 Batteries in Parallel . . . 115
Figure 58 Batteries in Series . . . 117
Figure 59 Measurement of Power . . . 119
Figure 60 Power in Series and Parallel Connections . . . 121
Figure 61 Electrical Loads . . . 123
Figure 62 Efficiency of a Motor . . . 125
Figure 63 Electrical Charges Forces . . . 129
Figure 64 Capacitor Principle . . . 131
Figure 65 Electric Field . . . 133
Figure 66 Fuel Tank: Influence of the Dielectric . . . 135
Figure 67 Basic Construction of Capacitors . . . 137
Figure 68 Shapes of Capacitors . . . 139
Figure 69 Variable Capacitors . . . 141
Figure 70 Capacitors . . . 143

TABLE OF FIGURES

Figure 71 Electric Field ... 145
Figure 72 Capacitors in Parallel and Series Connection ... 147
Figure 73 Charging of Capacitors ... 149
Figure 74 Graphs of Capacitors Charging / Discharging ... 151
Figure 75 Magnetism ... 155
Figure 76 Magnetic Compass ... 157
Figure 77 Weiss Domains ... 159
Figure 78 Magnetized Iron ... 161
Figure 79 Magnetization ... 163
Figure 80 Magnet Storing ... 167
Figure 81 Magnetic Shielding ... 169
Figure 82 Proximity Switch ... 171
Figure 83 Current and Magnetic Field ... 173
Figure 84 Summation of Magnetic Fields ... 175
Figure 85 Magnetomotive Force ... 177
Figure 86 Magnetic Field Strength ... 179
Figure 87 Permeability ... 181
Figure 88 Magnetic Flux Density ... 183
Figure 89 Magnetic Flux ... 185
Figure 90 Electromagnet ... 187
Figure 91 Saturation Point ... 189
Figure 92 Hysteresis Loops ... 191
Figure 93 Induction of Motion ... 193
Figure 94 Lenz's Law ... 195
Figure 95 Coil ... 197
Figure 96 Mutual Induction ... 199
Figure 97 Current Transformer ... 201
Figure 98 Position of Coils ... 203
Figure 99 Self-Induction ... 205
Figure 100 AC/DC ... 207
Figure 101 Frequencies and Wave Length ... 209
Figure 102 Amplitude and AC Voltage Curve ... 211
Figure 103 Line Diagram of AC Voltage ... 213
Figure 104 Root Mean Square Values ... 215
Figure 105 Non-Sinusodial Voltages ... 217
Figure 106 Undulated Current ... 219
Figure 107 Generation of a Sinusodial Voltage ... 221
Figure 108 Frequency and Rotational Speed ... 223
Figure 109 Phasors ... 225
Figure 110 Three-Phase Generator ... 227
Figure 111 Three-Phase System ... 229
Figure 112 Phase Shift ... 231
Figure 113 Different AC Quantities in one Diagram ... 233
Figure 114 Ohmic Workload on DC and AC ... 235
Figure 115 Înductor on AC and DC ... 237
Figure 116 Capacitor connected to AC and DC ... 241
Figure 117 Influence of Frequency on Resistance and Reactance ... 245
Figure 118 Impedance ... 247
Figure 119 Series Connection of Resistor and Coil ... 249
Figure 120 Series Connection of Resistor and Coil ... 251
Figure 121 Impedance ... 253
Figure 122 Impedance Triangle ... 255
Figure 123 Resistor and Capacitor in Series ... 257
Figure 124 Resistor and Capacitor in parallel ... 259
Figure 125 Resistor, Coil and Capacitor in Series ... 261
Figure 126 Resistor, Coil and Capacitor in Parallel ... 263
Figure 127 Power at True Load ... 265
Figure 128 Reactive Power (inductive load) ... 267
Figure 129 Reactive Power (capacitive load) ... 269
Figure 130 Apparent Power ... 271
Figure 131 Power Factor ... 273
Figure 132 Power Factor ... 275
Figure 133 Work ... 277
Figure 134 Series Resonance ... 279
Figure 135 Series Resonance ... 281
Figure 136 Series Resonance ... 283
Figure 137 Series Resonant Circuit ... 285
Figure 138 Parallel Resonance ... 287
Figure 139 Parallel Resonance ... 289
Figure 140 Impedance Curve at Parallel Resonance ... 291

TABLE OF FIGURES

Figure 141 Filter ... 293
Figure 142 High-Pass Filter ... 295
Figure 143 Low-Pass Filter ... 297
Figure 144 Sieving ... 299
Figure 145 Band-Pass and Band-Stop ... 301
Figure 146 Transformer Principle ... 303
Figure 147 Shapes of Transformers ... 305
Figure 148 Transformer ... 307
Figure 149 Transformer ... 309
Figure 150 Transformer Losses ... 313
Figure 151 R, C, L - Load of a Transformer ... 315
Figure 152 Short Circuit Voltage ... 317
Figure 153 Symbol and Application of Autotransformers ... 319
Figure 154 Current Transformer ... 321
Figure 155 Current Transformer ... 323
Figure 156 Three-Phase Transformer ... 325
Figure 157 Overview: Types of Electrical Machines ... 327
Figure 158 Motor Principle and Generator Principle ... 329
Figure 159 Construction of a DC Machine ... 331
Figure 160 Armature Construction ... 333
Figure 161 Basic DC Motor Construction ... 335
Figure 162 Fields of a DC Machine ... 337
Figure 163 Motor with Commutating Poles and Compensating Winding 339
Figure 164 Speed Control ... 341
Figure 165 Rotational Direction ... 343
Figure 166 Shunt-Wound Motor ... 345
Figure 167 Shunt-Wound Generator ... 347
Figure 168 Series-Wound Motor ... 349
Figure 169 Starter Generator ... 351
Figure 170 Compound DC Machine (Characteristic) ... 353
Figure 171 Compound DC Machine (Circuit) ... 355
Figure 172 Universal Motor ... 357
Figure 173 Alternator ... 359
Figure 174 Operation Characteristics of AC Generators ... 361
Figure 175 Generation of a Sinusoidal Voltage ... 363
Figure 176 Synchronous Generator ... 365
Figure 177 Synchronous Generator (3 Phases) ... 367
Figure 178 Aircraft PMG Synchronous Generator ... 369
Figure 179 Rotor of an Aircraft Generator ... 370
Figure 180 Exciter-Generator Rotor of an Aircraft Generator ... 371
Figure 181 Generator Network ... 373
Figure 182 Two-Phase Generator Principle ... 375
Figure 183 Synchronous Machine ... 377
Figure 184 Load Angle of Synchronous Machines ... 379
Figure 185 B737 NG APU Starter Generator ... 381
Figure 186 Asynchronous Motors ... 383
Figure 187 Magnetic Fields in Asynchronous Motors ... 385
Figure 188 Split Pole Motor ... 387
Figure 189 Capacitor Motor ... 389